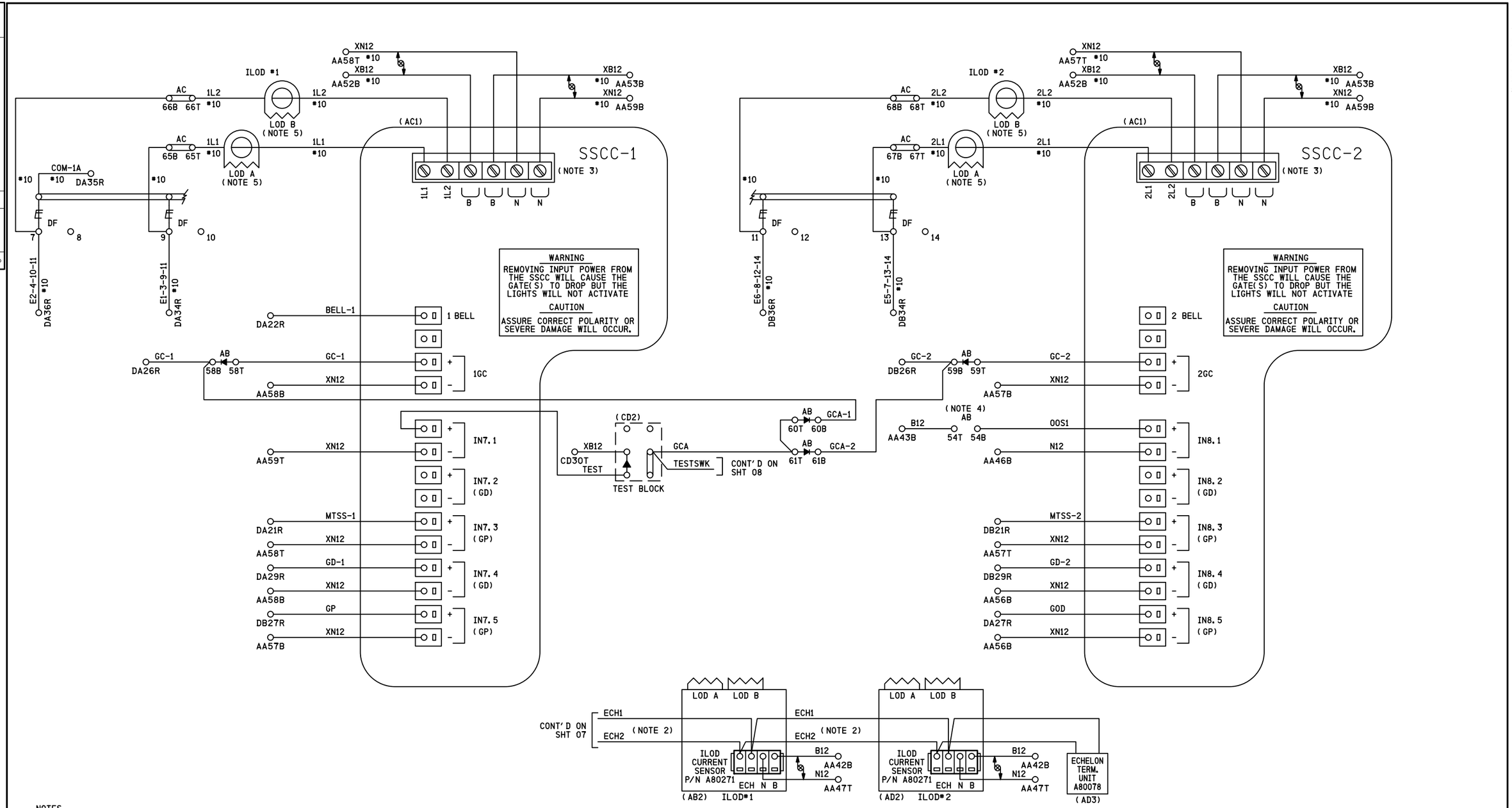

NOTES

1) ALL WIRING TO BE #16 AWG UNLESS OTHERWISE NOTED
2) USE BELDEN CABLE, PART # 8461-u500-60 FOR ALL ECHELON AND LAN WIRING
3) ENSURE CONNECTIONS ARE SECURED IN PLACE BY SCREW LOCKING MECHANISM
4) TO TAKE TRACK 1 (T1 & T2) OUT OF SERVICE, JUMPER AB54T TO AB54B
5) LOOP WIRE THROUGH LOD TWO (2) TIMES

DENOTES RECTIFIER, SAFETRAN PART # 8002A299006

DENOTES TWISTED PAIR

SII 12 OCT 2015

PROPOSED
DESIGN NO. 13-0326
RED-IN YELLOW-OUT

AS INSTALLED
DATE
BY
(PRINT NAME)

PROPOSED D	M	Y	REVISIONS	D	C	COMPLETED D	M	Y	C

REGION SOUTHERN
SUB. GILMAN 349

SIGNALS AND COMMUNICATIONS HOMEWOOD
12 OCTOBER 2015
DES. BEH
CH. MRB

GCP 4000/SSCCIII GATE CONTROLLERS W/ ILODS
GUTHRIE, IL
TR30A/800E

GIL-104.94-09

DOT#289 350T

REVISIONS				
NO.	DATE	BY	DESCRIPTION	APP. BY
1				
2				
3				
4				
5				

SIEMENS INDUSTRY INC

DES. : BEH	DATE: 12/10/15	JOB NO. : PICA10601	
CKD. : MRB	ISSUE DATE: N/A	EST. NO. :XP-7993	
DRN. : BEH	PLAN NO. :N/A	SHEET 9 OF 30	
P TIME:11:20	P DATE: 10-FEB-2016	CAD ID. : GIL-104.94-09	

SIEMENS INDUSTRY INC
LOUISVILLE DIVISION, LOUISVILLE, KY

gil-104.94-09.dgn
10-FEB-2016

CONTACT	CLOSED AT	FUNCTION
6	70° -90°	POWER DOWN CONTROL
7	0° -89°	POWER UP CONTROL
8	83° -90°	FLASHING LGT. CONTROL
9	5° -90°	BELL CONTROL
10	0° -5°	GATE DOWN INDICATION
11	N/A	SPARE
12	N/A	SPARE

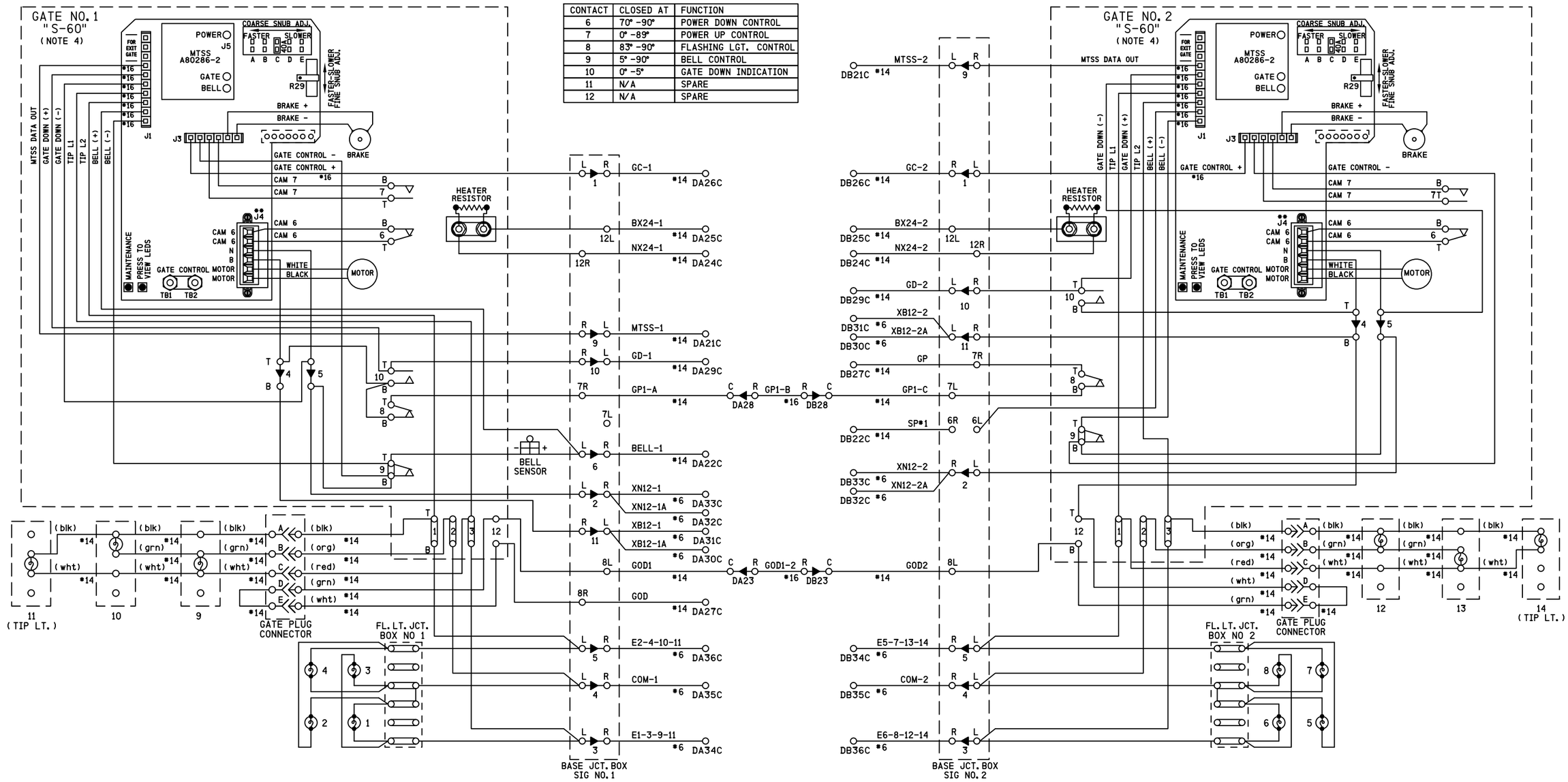

NOTES

1) ON GATE No. 1 ADD JUMPER BETWEEN TERMINALS:
   ADD JUMPER BETWEEN TERMINAL 4T & 10B,
   ADD JUMPER BETWEEN TERMINAL 8B & 10B,
   ADD JUMPER BETWEEN TERMINAL 5B & 9B
2) ON GATE No. 2 ADD JUMPER BETWEEN TERMINALS:
   ADD JUMPER BETWEEN TERMINAL 4T & 10B,
   ADD JUMPER BETWEEN TERMINAL 5B & 9B,
   ADD JUMPER BETWEEN TERMINAL 4B & 12T
3) ALL WIRING #10 AWG UNLESS OTHERWISE NOTED
4) GATE DESCENT TIME (RELEASE FROM VERTICAL TO FULLY HORIZONTAL) TO BE WITHIN 11 SECONDS
5) BELL CUT-OUT (5° -90°) WHEN REQUIRED
   REMOVE STRAP BETWEEN 9B AND 9T
6) ENSURE ALL TERMINALS HAVE TWO SHOULDER NUTS

SII 12 OCT 2015

PROPOSED
DESIGN NO. 13-0326
RED-IN YELLOW-OUT

AS INSTALLED
DATE _____
BY _____
(PRINT NAME)

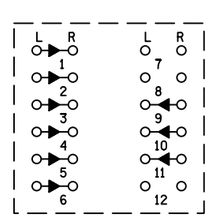
TERMINAL NUMBERING
BASE JCT. BOX 1

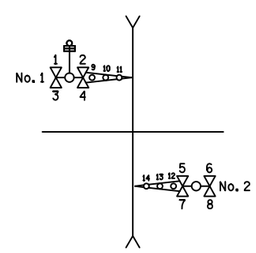

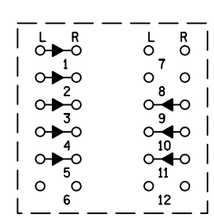
TERMINAL NUMBERING
BASE JCT. BOX 2

PROPOSED D	M	Y	REVISIONS	D	C	COMPLETED D	M	Y	C

REGION SOUTHERN
SUB. GILMAN 349

SIGNALS AND COMMUNICATIONS HOMEWOOD
12 OCTOBER 2015
DES. BEH
CH. MRB

GATE 1 & 2 MECH. CONTROL CIRCUITS
SAFETRAN S-60
GUTHRIE, IL
TR30A/800E

GIL-104.94-10

DOT#289 350T

NO.	DATE	BY	DESCRIPTION	APP. BY
1				
2				
3				
4				
5				

REVISIONS

SIEMENS INDUSTRY INC

DES. : BEH	DATE: 12/10/15	JOB NO. : PICA10601	
CKD. : MRB	ISSUE DATE: N/A	EST. NO. : XP-7993	
DRN. : BEH	PLAN NO. : N/A	SHEET 10 OF 30	
P TIME: 11:20	P DATE: 10-FEB-2016	CAD ID. : GIL-104.94-10	

SIEMENS INDUSTRY INC
LOUISVILLE DIVISION, LOUISVILLE, KY

gil-104.94-10.dgn
10-FEB-2016

REVISIONS				
NO.	DATE	BY	DESCRIPTION	APP. BY
1				
2				
3				
4				
5				

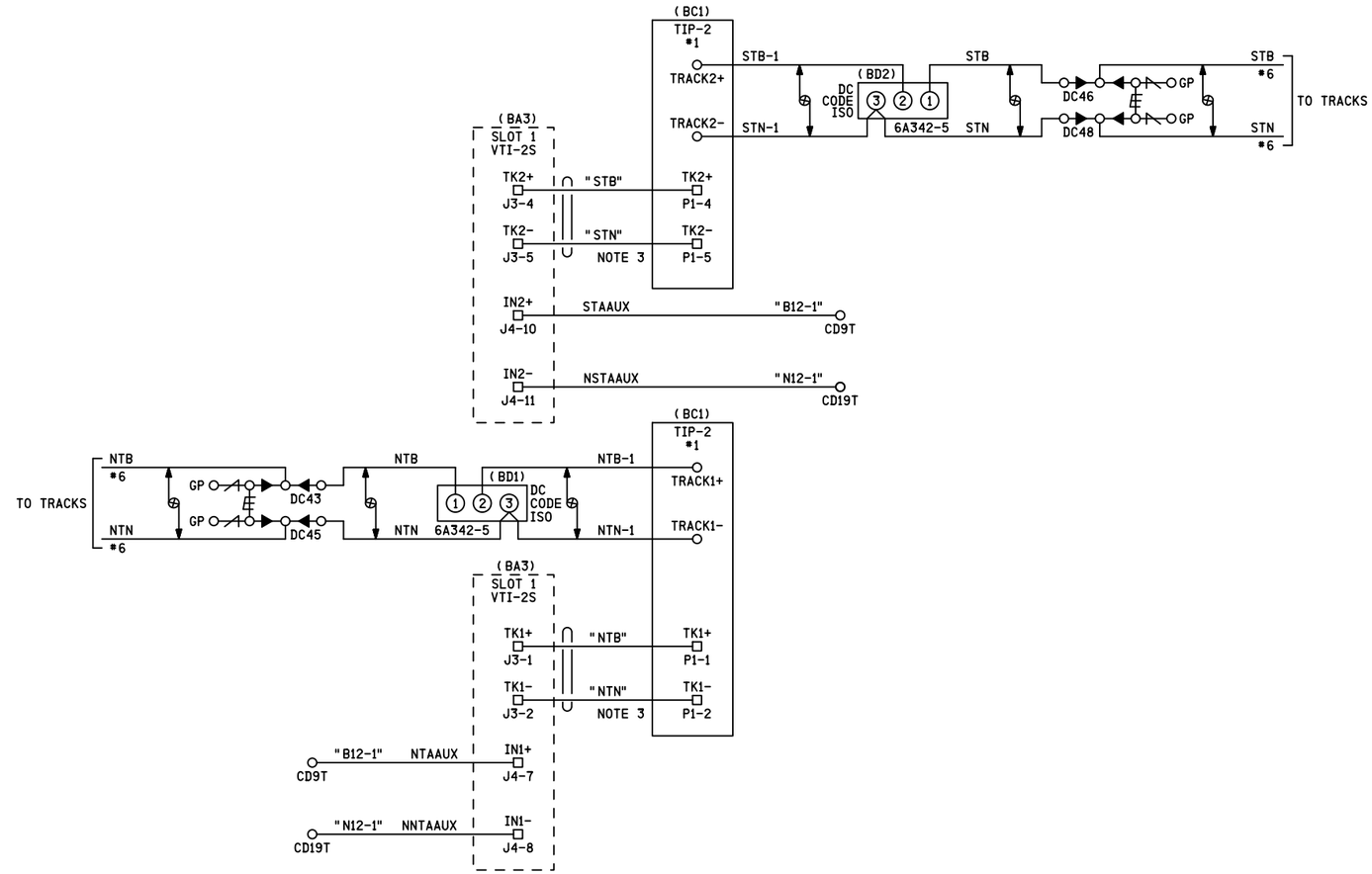

NOTES
1) CIRCUITS TO BE #10 AWG UNLESS OTHERWISE NOTED
2) GP INDICATES GROUND PLANE
3) 8' TIP-2 CABLE HPN 814-096000-017

-DENOTES TWISTED PAIR

" " -DENOTES REFERENCE, NOT WIRE TAG

GP L C R -DENOTES THRU TERMINAL

SII 12 OCT 2015

PROPOSED
DESIGN NO. 13-0326
RED-IN YELLOW-OUT

AS INSTALLED
DATE
BY
(PRINT NAME)

PROPOSED D	M	Y	REVISIONS	D	C	COMPLETED D	M	Y	C

REGION SOUTHERN
SUB. GILMAN 349

SIGNALS AND COMMUNICATIONS HOMEWOOD — DES. BEH
12 OCTOBER 2015 — CH. MRB

TRACK CIRCUITS

GUTHRIE, IL
TR30A/800E

GIL-104.94-11

DOT#289 350T

SIEMENS INDUSTRY INC
LOUISVILLE DIVISION, LOUISVILLE, KY

SIEMENS INDUSTRY INC			
DES.: BEH	DATE: 12/10/15	JOB NO.: PICA10601	
CKD.: MRB	ISSUE DATE: N/A	EST. NO.: XP-7993	
DRN.: BEH	PLAN NO.: N/A	SHEET 11 OF 30	
P TIME: 11:21	P DATE: 10-FEB-2016	CAD ID.: GIL-104.94-11	

gil-104.94-11.dgn
10-FEB-2016

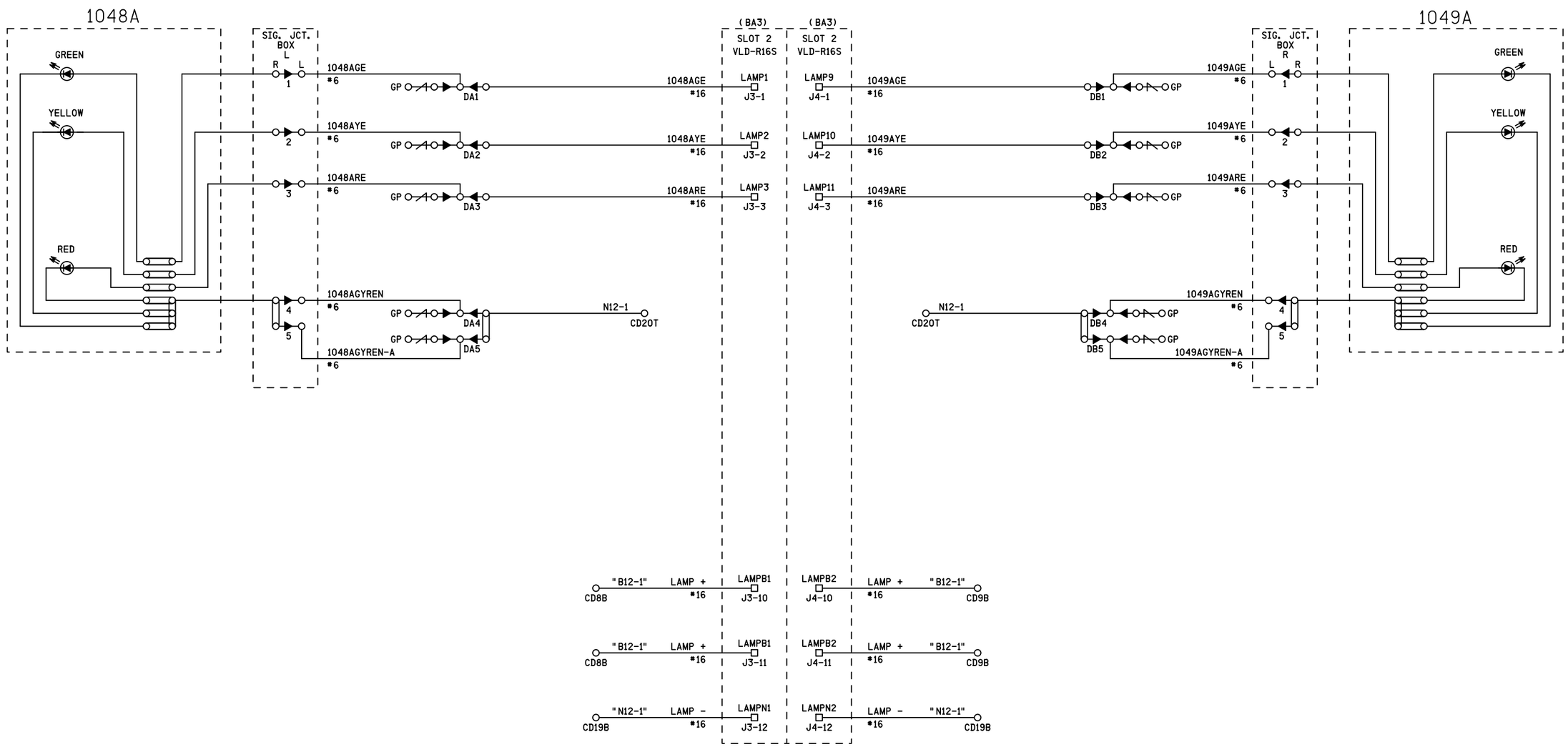

NOTES
1) CIRCUITS TO BE *10 AWG UNLESS OTHERWISE NOTED
2) GP INDICATES GROUND PLANE
" " -DENOTES REFERENCE, NOT WIRE TAG
GP L C R -DENOTES THRU TERMINAL

SII 12 OCT 2015

PROPOSED
DESIGN NO. 13-0326
RED-IN YELLOW-OUT

AS INSTALLED
DATE
BY
(PRINT NAME)

PROPOSED D	M	Y	REVISIONS	D	C	COMPLETED D	M	Y	C

REGION SOUTHERN
SUB. GILMAN 349

SIGNALS AND COMMUNICATIONS HOMEWOOD
12 OCTOBER 2015
DES. BEH
CH. MRB

SIGNAL CONTROL CIRCUITS
GUTHRIE, IL
TR30A/800E

GIL-104.94-12

DOT#289 350T

REVISIONS

NO.	DATE	BY	DESCRIPTION	APP. BY
1				
2				
3				
4				
5				

SIEMENS INDUSTRY INC

DES.: BEH	DATE: 12/10/15	JOB NO.: PICA10601	
CKD.: MRB	ISSUE DATE: N/A	EST. NO.: XP-7993	
DRN.: BEH	PLAN NO.: N/A	SHEET 12 OF 30	
P TIME: 11:21	P DATE: 10-FEB-2016	CAD ID.: GIL-104.94-12	

SIEMENS INDUSTRY INC
LOUISVILLE DIVISION, LOUISVILLE, KY

gil-104.94-12.dgn
10-FEB-2016

REVISIONS				
NO.	DATE	BY	DESCRIPTION	APP. BY
1				
2				
3				
4				
5				

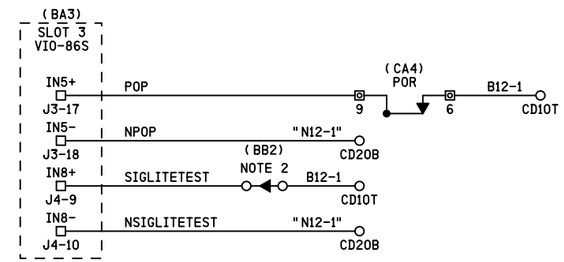

NOTES
1) CIRCUITS TO BE #16 AWG UNLESS OTHERWISE NOTED
2) CLOSE TEST LINK TO LIGHT SIGNALS
" " - DENOTES REFERENCE, NOT WIRE TAG

SII 12 OCT 2015

PROPOSED
DESIGN NO. 13-0326
RED-IN YELLOW-OUT

AS INSTALLED
DATE _____
BY _____
(PRINT NAME)

PROPOSED			REVISIONS	D	C	COMPLETED			C
D	M	Y				D	M	Y	

REGION SOUTHERN
SUB. GILMAN 349

SIGNALS AND COMMUNICATIONS HOMEWOOD
12 OCTOBER 2015
DES. BEH
CH. MRB

MISC. CIRCUITS
GUTHRIE, IL
TR30A/800E

GIL-104.94-13

DOT#289 350T

SIEMENS INDUSTRY INC
LOUISVILLE DIVISION, LOUISVILLE, KY

SIEMENS INDUSTRY INC

DES.: BEH	DATE: 12/10/15	JOB NO.: PICA10601	
CKD.: MRB	ISSUE DATE: N/A	EST. NO.: XP-7993	
DRN.: BEH	PLAN NO.: N/A	SHEET 13 OF 30	
P TIME: 11:21	P DATE: 10-FEB-2016	CAD ID.: GIL-104.94-13	

gil-104.94-13.dgn
10-FEB-2016

REVISIONS				
NO.	DATE	BY	DESCRIPTION	APP. BY
1				
2				
3				
4				
5				

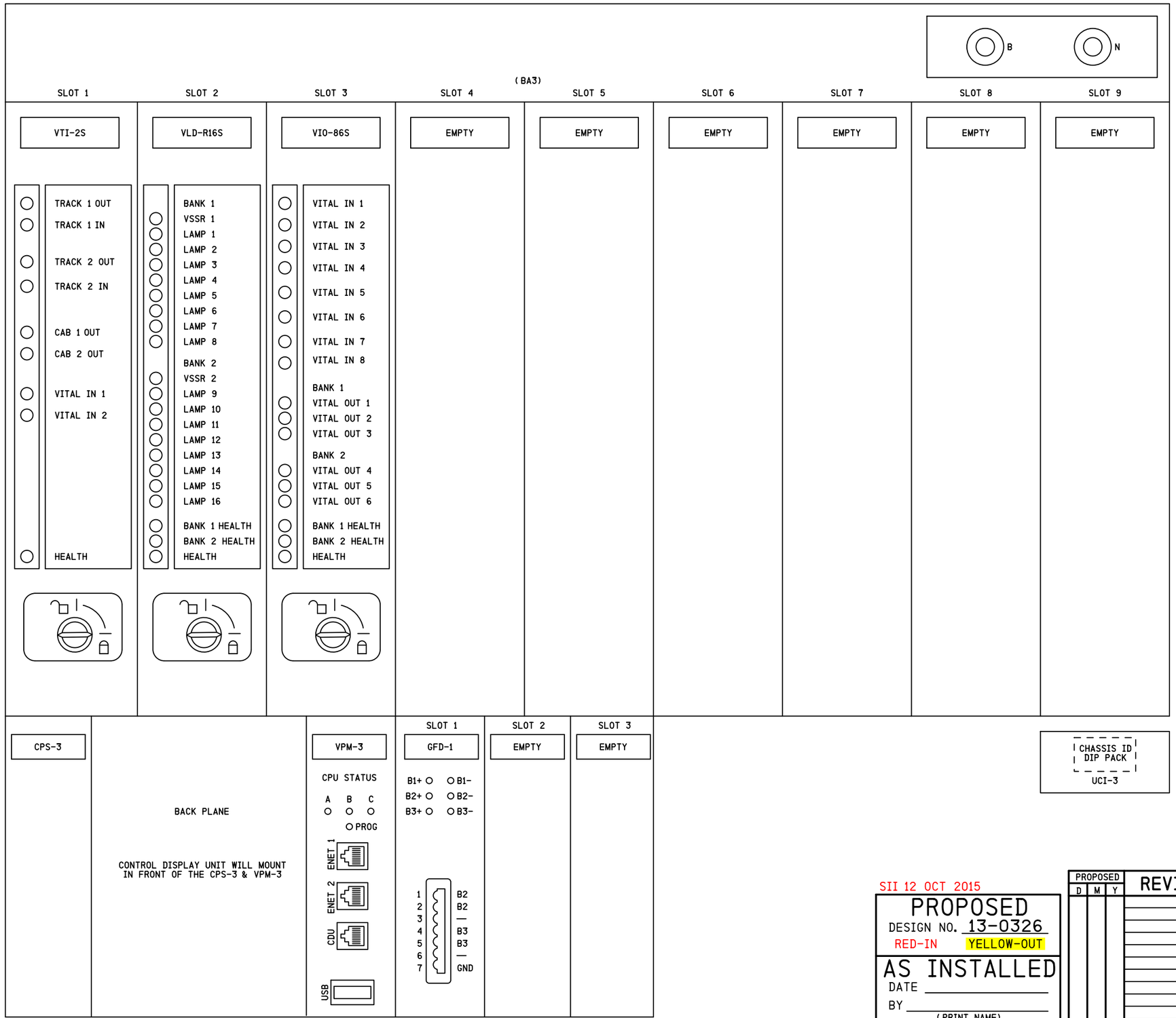

ELECTROLOGIXS COMMUNICATION NOTES:

SERIAL PORT 1 (VPM-2+ & VPM-3)
- -GENISYS
- -SCS-128
- -LCP (MUST USE EXTERNAL CURRENT LOOP ADAPTER P/N 203051-000 FOR GENERIC/CUSTOM LCP UNITS OR CIO-2A TO SOFTWARE PANEL)
- -UCE

SERIAL PORT 2 & 3 (VPM-2+ & VPM-3)
- -ATCS (MUST USE CIO-MDA TO RADIO)
- -LCP (MUST USE EXTERNAL CURRENT LOOP ADAPTER P/N 203051-000 FOR GENERIC/CUSTOM LCP UNITS OR CIO-2A TO SOFTWARE PANEL)
- -HAWK
- -REMOTE (RP2000)

ETHERNET (IP-BASED PROTOCOLS VPM-3 ONLY)
GENISYS
REMOTE (RP2000)

NOTES

CDU-1 = CONTROL DISPLAY UNIT
CPS-3 = CENTRAL POWER SUPPLY
VPM-3 = VITAL PERIPHERAL MASTER MODULE
GFD-1 = GROUND FAULT DETECTOR MODULE
CIO-2A = COMMUNICATION INPUT/OUTPUT MODULE
CIO-1A = COMMUNICATION INPUT/OUTPUT MODULE
UCI-3 = CHASSIS INFORMATION MODULE
VTI-2S = VITAL TRACK INTERFACE
VLD-R16S = VITAL LAMP DRIVER MODULE
VIO-86S = VITAL 8 IN / 6 OUT

SII 12 OCT 2015

PROPOSED
DESIGN NO. 13-0326
RED-IN YELLOW-OUT

AS INSTALLED
DATE _____
BY _____
(PRINT NAME)

PROPOSED D	M	Y	REVISIONS	D	C	COMPLETED D	M	Y	C

REGION SOUTHERN
SUB. GILMAN 349

SIGNALS AND COMMUNICATIONS HOMEWOOD
DES. BEH
12 OCTOBER 2015
CH. MRB

IXS VLC HARDWARE CONFIGURATION
GUTHRIE, IL
TR30A/800E

GIL-104.94-14

DOT#289 350T

gil-104.94-14.dgn
10-FEB-2016

SIEMENS INDUSTRY INC			
DES.: BEH	DATE: 12/10/15	JOB NO.: PICA10601	
CKD.: MRB	ISSUE DATE: N/A	EST. NO.: XP-7993	
DRN.: BEH	PLAN NO.: N/A	SHEET 14 OF 30	
P. TIME: 11:21	P. DATE: 10-FEB-2016	CAD ID.: GIL-104.94-14	

SIEMENS INDUSTRY INC
LOUISVILLE DIVISION, LOUISVILLE, KY

REVISIONS				
NO.	DATE	BY	DESCRIPTION	APP. BY
1				
2				
3				
4				
5				

gll-104.94-15.dgn
10-FEB-2016

VTI-2S PERSONALITY MODULE (SLOT 1)

TK 1+	NTB	X	1
TK 1-	NTN	X	2
			3
TK 2+	STB	X	4
TK 2-	STN	X	5

J3

CAB1+			1
CAB1-			2
			3
CAB2+			4
CAB2-			5
			6
IN 1+	NTAAUX	X	7
IN 1-	NNTAAUX	X	8
			9
IN 2+	STAAUX	X	10
IN 2-	NSTAAUX	X	11

J4

VLD-R16S PERSONALITY MODULE (SLOT 2)

LAMP1	1048AGE	X	1
LAMP2	1048AYE	X	2
LAMP3	1048ARE	X	3
LAMP4			4
LAMP5			5
LAMP6			6
LAMP7			7
LAMP8			8
N/A			9
LAMPB1	LAMP +	X	10
LAMPB1	LAMP +	X	11
LAMPN1	LAMP -	X	12
N/A			13
VSSR1+			14
VSSR1-			15

J3

LAMP9	1049AGE	X	1
LAMP10	1049AYE	X	2
LAMP11	1049ARE	X	3
LAMP12			4
LAMP13			5
LAMP14			6
LAMP15			7
LAMP16			8
N/A			9
LAMPB2	LAMP +	X	10
LAMPB2	LAMP +	X	11
LAMPN2	LAMP -	X	12
N/A			13
VSSR2+			14
VSSR2-			15

J4

VIO-86S PERSONALITY MODULE (SLOT 3)

AUX

IN 1+			1
IN 1-			2
IN 2+			5
IN 2-			6
IN 3+			9
IN 3-			10
IN 4+			13
IN 4-			14
IN 5+	POP	X	17
IN 5-	NPOP	X	18

J3

AUX

IN 6+			1
IN 6-			2
IN 7+			5
IN 7-			6
IN 8+	SIGLITETEST	X	9
IN 8-	NSIGLITETEST	X	10
OUT 6+			17
OUT 6-			18

J4

AUX

OUT 1+			1
OUT 1-			2
OUT 2+			5
OUT 2-			6
OUT 3+			9
OUT 3-			10
OUT 4+			13
OUT 4-			14
OUT 5+			17
OUT 5-			18

J5

EMPTY (SLOT 4)

EMPTY (SLOT 5)

EMPTY (SLOT 6)

EMPTY (SLOT 7)

EMPTY (SLOT 8)

EMPTY (SLOT 9)

PERSONALITY MODULE LEGEND

TERMINAL LABEL → XXX | XXXX | X | X ← PIN NUMBER

APPLICATION DESCRIPTION

WIRE PRESENT

SII 12 OCT 2015

PROPOSED
DESIGN NO. 13-0326
RED-IN YELLOW-OUT

AS INSTALLED
DATE _____
BY _____
(PRINT NAME)

PROPOSED			REVISIONS	D	C	COMPLETED			C
D	M	Y				D	M	Y	

REGION SOUTHERN
SUB. GILMAN 349

SIGNALS AND COMMUNICATIONS HOMEWOOD
12 OCTOBER 2015
DES. BEH
CH. MRB

IXS VLC MODULE
CONNECTOR USAGE
GUTHRIE, IL
TR30A/800E

GIL-104.94-15

DOT#289 350T

SIEMENS INDUSTRY INC
LOUISVILLE DIVISION, LOUISVILLE, KY

SIEMENS INDUSTRY INC			
DES.: BEH	DATE: 12/10/15	JOB NO.: PICA10601	
CKD.: MRB	ISSUE DATE: N/A	EST. NO.: XP-7993	
DRN.: BEH	PLAN NO.: N/A	SHEET 15 OF 30	
P TIME: 11:21	P DATE: 10-FEB-2016	CAD ID.: GIL-104.94-15	

REVISIONS				
NO.	DATE	BY	DESCRIPTION	APP. BY
1				
2				
3				
4				
5				

gil-104.94-16.dgn
10-FEB-2016

VPM3 ETHERNET SETUP	
PORT 1 (TOP) IP ADDRESS	192.168.0.11
SUBNET MASK	255.255.255.0
PORT 2 (BOTTOM) IP ADDRESS	10.255.255.81
SUBNET MASK	255.255.255.0
DEFAULT GATEWAY	10.255.255.254

EXECUTIVE INFORMATION		
VPM-3	VERSION	CRC
VPM-A PROCESSOR	6.19	DF69F551
VPM-B PROCESSOR	6.19	A691C2E6
VPM-C PROCESSOR	6.19	516C6A47

APPLICATION SOFTWARE INFORMATION	
CNIXSM1.MB1	CHECKSUM: XXXX / CRC: XXXX
REV.	A
CNIXSM1V.B1	CHECKSUM: XXXX / CRC: XXXX
CNIXSM1NV.B1	CHECKSUM: XXXX / CRC: XXXX
YEAR COMPILED	2015
MONTH COMPILED	JULY
CHASSIS ID	212
ED SHEET	CNIXSM1

CHASSIS ID DIP SHUNTS
LOCATED ON BACKPLANE
UNDERNEATH UCI-3 MODULE

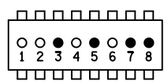

● = TAB PUNCHED OUT (BROKEN)
○ = TAB INTACT (MADE)
LEAVE TAB INTACT TO OBTAIN ID NUMBER

APPLICATION ID DIP SHUNTS
LOCATED INSIDE UCI-3 MODULE
UNDERNEATH EPROM

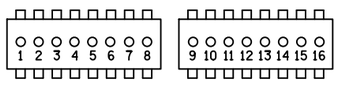

● = TAB PUNCHED OUT (BROKEN)
○ = TAB INTACT (MADE)
LEAVE TAB INTACT TO OBTAIN ID NUMBER

VITAL CONFIGURATION SETTINGS				
SET.	STATUS	TRUE	FALSE	BIT MEANING
1	LC1SW	X		TRUE INDICATES CODE 5 OUT TO THE LEFT WITH CODE 1 IN FROM THE RIGHT
2	LC5SW		X	TRUE INDICATES CODE 5 OUT TO THE LEFT WITH CODE 5 IN FROM THE RIGHT
3	RC1SW	X		TRUE INDICATES CODE 5 OUT TO THE RIGHT WITH CODE 1 IN FROM THE LEFT
4	RC5SW		X	TRUE INDICATES CODE 5 OUT TO THE RIGHT WITH CODE 5 IN FROM THE LEFT
5	REPEAT_L-R		X	TRUE INDICATES RIGHT TRACK REPEATER
6	SIGNAL_LEFT	X		TRUE INDICATES LEFT INTERMEDIATE SIGNAL
7	REPEAT_R-L		X	TRUE INDICATES LEFT TRACK REPEATER
8	SIGNAL_RIGHT	X		TRUE INDICATES RIGHT INTERMEDIATE SIGNAL
9	APPR_LITE_ON		X	TRUE INDICATES APPROACH LIGHTING ENABLED
10				
11	L_ELOCK_ENA		X	TRUE INDICATES LEFT TRACK ELECTRIC LOCK
12	R_ELOCK_ENA		X	TRUE INDICATES RIGHT TRACK ELECTRIC LOCK
13	L_ENTSIG_ENA		X	TRUE INDICATES LEFT TRACK ENTERING SIGNAL
14	R_ENTSIG_ENA		X	TRUE INDICATES RIGHT TRACK ENTERING SIGNAL
16	L_ADAPPDIV		X	TRUE INDICATES LEFT CODE 8 OUT FOR ADVANCE APPROACH DIVERGING ASPECT
17	R_ADAPPDIV		X	TRUE INDICATES RIGHT CODE 8 OUT FOR ADVANCE APPROACH DIVERGING ASPECT
18	R_C1_ALWAYS		X	TRUE INDICATES CODE 1 ALWAYS SENT ON RIGHT TRACK IN REPEATER MODE
19	L_C1_ALWAYS		X	TRUE INDICATES CODE 1 ALWAYS SENT ON LEFT TRACK IN REPEATER MODE
20				
21				
22	L_BG_HEAD_IN	X		TRUE INDICATES GREEN ASPECT ON LEFT SIGNAL B HEAD
23	L_BR_HEAD_IN	X		TRUE INDICATES RED ASPECT ON LEFT SIGNAL B HEAD
24	R_BG_HEAD_IN	X		TRUE INDICATES GREEN ASPECT ON RIGHT SIGNAL B HEAD
25	R_BR_HEAD_IN	X		TRUE INDICATES RED ASPECT ON RIGHT SIGNAL B HEAD

VITAL TIMER SETTINGS		
DESCRIPTION	TIMER	VALUE
APPROACH FLAG PICK	AFDT	16 SEC*
LEFT TRACK REPEATER LOS	LTKLOSP	10 SEC*
RIGHT TRACK REPEATER LOS	RTKLOSP	10 SEC*
LEFT E-LOCK SHORT TIME	LLRELSTFN	2 MIN*
LEFT E-LOCK LONG TIME	LLRELLTFN	16 MIN 39 SEC*
LEFT E-LOCK RELEASE CHECK	LL_TK_CHK_TE	10 SEC*
BOOT DELAY TIMER	BOOT_TIMER	30 SEC*
RIGHT E-LOCK SHORT TIME	RLRELSTFN	2 MIN*
RIGHT E-LOCK LONG TIME	RLRELLTFN	16 MIN 39 SEC*
RIGHT E-LOCK RELEASE CHECK	RL_TK_CHK_TE	10 SEC*
LEFT AUX LOS	LAUXLOSP	10 SEC*
RIGHT AUX LOS	RAUXLOSP	10 SEC*
RIGHT TRACK C5 LOS	RTKC5LOSP	10 SEC*
LEFT TRACK C5 LOS	LTKC5LOSP	10 SEC*

* = SET TO DEFAULT

TYPICAL INSTALLATION OF
EPROM & DIP SHUNT

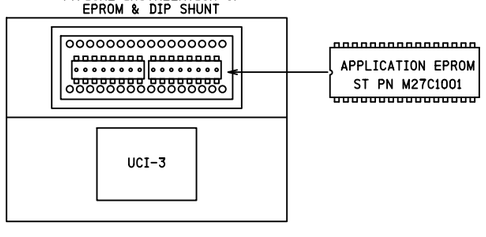

FIELD TO CONFIRM ALL SOFTWARE SETTINGS & CONFIGURATIONS

TO BE CONFIRMED

CONFIRMED
DATE _____
BY _____
(PRINT NAME)

SII 12 OCT 2015

PROPOSED
DESIGN NO. 13-0326
RED-IN YELLOW-OUT

AS INSTALLED
DATE _____
BY _____
(PRINT NAME)

PROPOSED			REVISIONS	D	C	COMPLETED			C
D	M	Y				D	M	Y	

REGION SOUTHERN
SUB. GILMAN 349

SIGNALS AND COMMUNICATIONS HOMEWOOD
12 OCTOBER 2015
DES. BEH
CH. MRB

IXS VLC CHASSIS ID & VITAL CONFIGURATION SETTINGS
GUTHRIE, IL
TR30A/800E

GIL-104.94-16

DOT#289 350T

SIEMENS INDUSTRY INC

DES.: BEH	DATE: 12/10/15	JOB NO.: PICA10601	
CKD.: MRB	ISSUE DATE: N/A	EST. NO.: XP-7993	
DRN.: BEH	PLAN NO.: N/A	SHEET 16 OF 30	
P TIME: 11:21	P DATE: 10-FEB-2016	CAD ID.: GIL-104.94-16	

SIEMENS INDUSTRY INC
LOUISVILLE DIVISION, LOUISVILLE, KY

REVISIONS				
NO.	DATE	BY	DESCRIPTION	APP. BY
1				
2				
3				
4				
5				

SOFTWARE CONFIGURATION PROPERTIES

PTC SOFTWARE INFORMATION				
FILE	NAME	CRC	REV.	DATE
RULES LIBRARY	CN USOR GETS LIBRARY	0FAB0569	08	05/29/14
PTC CONFIG.	GIL_104_94.PTCBCFG	XXXXXXXX	XX	XX/XX/XX
PTC MAPPING	CNIXSM1.PTCBMAP	XXXXXXXX	XX	XX/XX/XX

STATUS MSG. BODY USE

DEVICE	START BIT	END BIT
L SIGNAL	00	04
R SIGNAL	05	09
L TRACK	10	10
R TRACK	11	11
L SWITCH	12	12
R SWITCH	13	13
POK	14	14
LOK	15	15

WAYSIDE DEVICES

L SIGNAL

DEVICE TYPE	VHLC- ELX- EC5
DEVICE STATUS OFFSET	00
MIN. DEBOUNCE TIME	0
DEFAULT DEBOUNCE TIME	0
MAX. DEBOUNCE TIME	0

APPLICABILITY PROPERTY	ENABLED	FP
NUMBER PLATE	T	□
LOW SIGNAL	F	□
ROUTE SIG.	T	□
SPEED SIG.	F	□
RULES 833-844	F	□

R SIGNAL

DEVICE TYPE	VHLC- ELX- EC5
DEVICE STATUS OFFSET	05
MIN. DEBOUNCE TIME	0
DEFAULT DEBOUNCE TIME	0
MAX. DEBOUNCE TIME	0

APPLICABILITY PROPERTY	ENABLED	FP
NUMBER PLATE	T	□
LOW SIGNAL	F	□
ROUTE SIG.	T	□
SPEED SIG.	F	□
RULES 833-844	F	□

L TRACK

DEVICE TYPE	HAZARD1
DEVICE STATUS OFFSET	10
MIN. DEBOUNCE TIME	0
DEFAULT DEBOUNCE TIME	0
MAX. DEBOUNCE TIME	0

R TRACK

DEVICE TYPE	HAZARD1
DEVICE STATUS OFFSET	11
MIN. DEBOUNCE TIME	0
DEFAULT DEBOUNCE TIME	0
MAX. DEBOUNCE TIME	0

L SWITCH

DEVICE TYPE	HAZARD1
DEVICE STATUS OFFSET	12
MIN. DEBOUNCE TIME	0
DEFAULT DEBOUNCE TIME	0
MAX. DEBOUNCE TIME	0

R SWITCH

DEVICE TYPE	HAZARD1
DEVICE STATUS OFFSET	13
MIN. DEBOUNCE TIME	0
DEFAULT DEBOUNCE TIME	0
MAX. DEBOUNCE TIME	0

POK

DEVICE TYPE	HAZARD1
DEVICE STATUS OFFSET	14
MIN. DEBOUNCE TIME	0
DEFAULT DEBOUNCE TIME	0
MAX. DEBOUNCE TIME	0

LOK

DEVICE TYPE	HAZARD1
DEVICE STATUS OFFSET	15
MIN. DEBOUNCE TIME	0
DEFAULT DEBOUNCE TIME	0
MAX. DEBOUNCE TIME	0

GENERAL WIU SETTINGS

WIU ADDRESS	710334918505
BEACON CONTINUOUS	■
BEACON ON CHANGE	□
BEACON RATE	1000 mSEC
BEACON BIT TIME	300 SEC
BEACON END TIME	120 SEC
MAX. BEACON INTERVAL	900 SEC
TIME ZONE	-6 HRS FROM GMT
OBSERVE DST	■
DST START	MONTH MAR WEEK 2
DST END	MONTH NOV WEEK 1
TIME SYNC SOURCE	SNTP
SNTP TIME UPDATE PERIOD	5 MINUTES
SNTP SERVER 1 ADDRESS	10.255.255.254
SNTP SERVER 2 ADDRESS	10.255.255.20

PTC TIME SETTINGS

TIME MESSAGES BEFORE SENDING WSM	3
IGNORED TIME DIFFERENCE	3 SEC
MAX. TIME CHANGE WITHIN MINUTES	60 MIN
NO TIME SYNC MESSAGE	6 MIN
TIME MESSAGE DEVIATION	1 SEC
MAX. SECONDS TIME CHANGE	3 SEC
LRM MAX. SECONDS TIME DIFFERENCE	3 SEC
PTC TIME RESYNC ENABLE	■

EMP SETTINGS

SOURCE ADDRESS	cn.w.349185:05.wiu
DESTINATION ADDRESS	xx.l.x.000000:tmc
TIME FORMAT	ABSOLUTE
DATA INTEGRITY	APP. SPECIFIC
ENCRYPTION ENABLED	□
COMPRESSION ENABLED	□
TTL(TIMED BEACON)	12 SEC
QoS(TIMED BEACON)	1656
TTL(GET WIU STATUS)	12 SEC
QoS(GET WIU STATUS)	3576

CLASS D SETTINGS

USE SIGNAL SYSTEM ETHERNET SETTINGS	□
DESTINATION IP ADDRESS	10.255.255.20
DESTINATION TCP PORT	8001
MODE	BIDIRECTIONAL
LOG TRAFFIC	□
KEEP ALIVE INTERVAL	9000 mSEC
KEEP ALIVE ACK TIMEOUT	3000 mSEC
DATA ACK ENABLED	■
DATA ACK TIMEOUT	3000 mSEC
CONNECTION TIMEOUT	1000 mSEC
CONNECTION DELAY	1000 mSEC
NAK RETRY LIMIT	2
CONNECTION RETRY LIMIT	-1
RETRANSMIT DELAY	0
RECONNECTION LIMIT	-1

GENERAL ETHERNET SETTINGS

USE SIGNAL SYSTEM ETHERNET SETTINGS	□

PORT	IP ADDRESS	SUBNET MASK
PORT 1	192.168.0.11	255.255.255.0
PORT 2	10.255.255.81	255.255.255.0

DEF. GATEWAY
10.255.255.254

DHCP SERVER SETTINGS

PORT	ENABLED	IP POOL START ADDRESS	IP POOL END ADDRESS	DEFAULT GATEWAY
PORT 1	ENABLED	192.168.0.12	192.168.0.43	0.0.0.0
PORT 2	DISABLED	10.255.255.213	10.255.255.214	0.0.0.0

WEB INTERFACE

PORT	GUI ACCESS LEVEL
PORT 1	READ-WRITE
PORT 2	READ-WRITE

INACTIVITY TIMEOUT	60 MIN
WEB PORT NUMBER	80

	ENABLED	NETWORK	NET MASK
TRUSTED SOURCE 1	DISABLED	0.0.0.0	0.0.0.0
TRUSTED SOURCE 2	DISABLED	0.0.0.0	0.0.0.0

TELNET INTERFACE

PORT	TELNET ACCESS
PORT 1	ENABLED
PORT 2	ENABLED

INACTIVITY TIMEOUT	0 MIN
TELNET PORT NUMBER	23

	ENABLED	NETWORK	NET MASK
TRUSTED SOURCE 1	DISABLED	0.0.0.0	0.0.0.0
TRUSTED SOURCE 2	DISABLED	0.0.0.0	0.0.0.0

FIELD TO CONFIRM ALL PTC SETTINGS & CONFIGURATIONS

TO BE CONFIRMED

CONFIRMED
DATE _____
BY _____
(PRINT NAME)

SII 06 APR 2015

PROPOSED
DESIGN NO. PTC-023
RED-IN YELLOW-OUT

AS INSTALLED
DATE _____
BY _____
(PRINT NAME)

PROPOSED D	PROPOSED M	PROPOSED Y	REVISIONS	D	C	COMPLETED D	COMPLETED M	COMPLETED Y	C

REGION SOUTHERN
SUB. GILMAN 349

SIGNALS AND COMMUNICATIONS HOMEWOOD
12 OCTOBER 2015
DES. BEH
CH. MRB

IXS PTC WIU SOFTWARE CONFIGURATION
GUTHRIE, IL
TR30A/800E

GIL-104.94-17

DOT#289 350T

SIEMENS INDUSTRY INC
DES.: BEH | DATE: 12/10/15 | JOB NO.: PICA10601
CKD.: MRB | ISSUE DATE: N/A | EST. NO.: XP-7993
DRN.: BEH | PLAN NO.: N/A | SHEET 17 OF 30
P. TIME: 11:21 | P. DATE: 10-FEB-2016 | CAD ID.: GIL-104.94-17

SIEMENS INDUSTRY INC
LOUISVILLE DIVISION, LOUISVILLE, KY

gil-104.94-17.dgn
10-FEB-2016

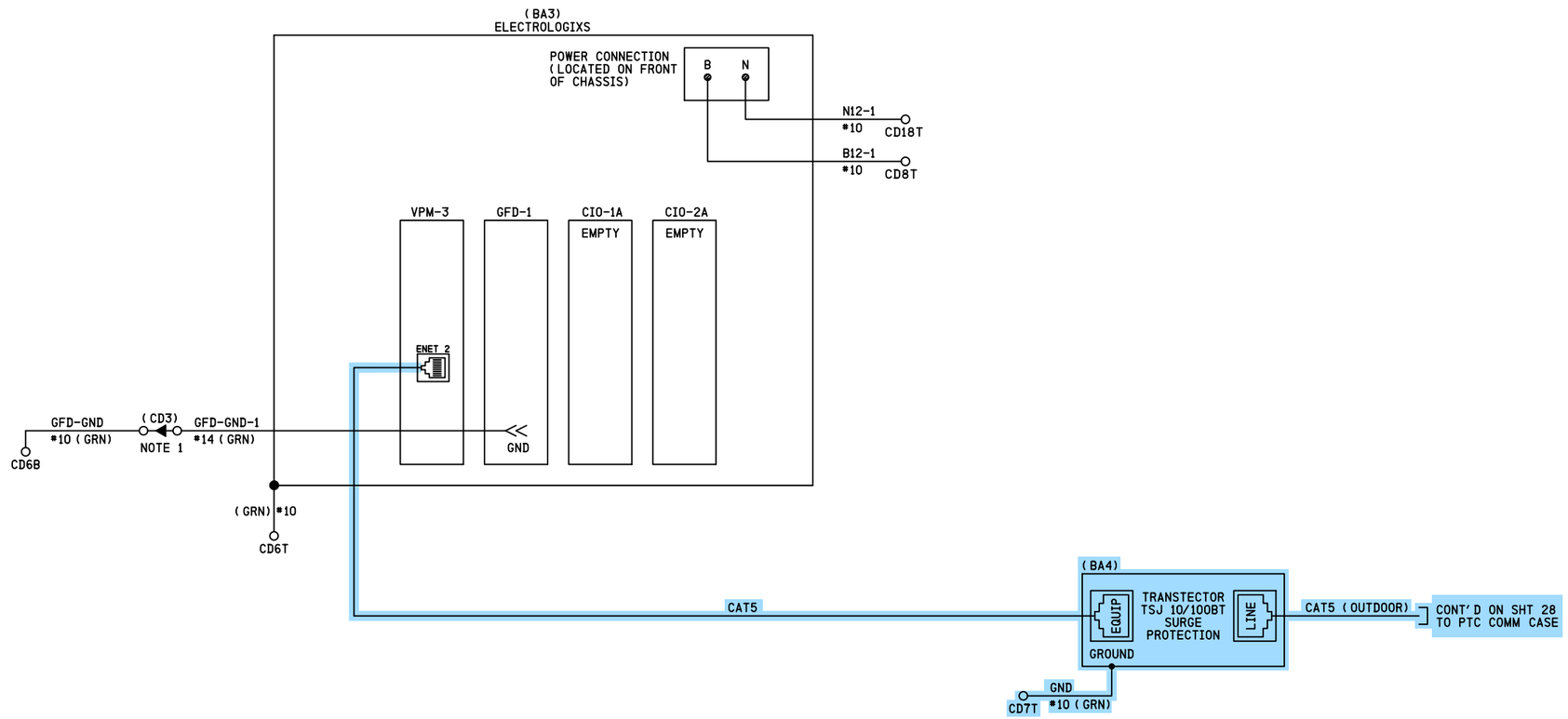

NOTES
1) OPEN TEST LINK TO TEST IXS GROUND

SII 06 APR 2015
PROPOSED
DESIGN NO. PTC-023
RED-IN YELLOW-OUT
AS INSTALLED
DATE _____
BY _____
(PRINT NAME)

SII 12 OCT 2015
PROPOSED
DESIGN NO. 13-0326
RED-IN YELLOW-OUT
AS INSTALLED
DATE _____
BY _____
(PRINT NAME)

PROPOSED D	M	Y	REVISIONS	D	C	COMPLETED D	M	Y	C

REGION SOUTHERN
SUB. GILMAN 349
SIGNALS AND COMMUNICATIONS HOMEWOOD
12 OCTOBER 2015
DES. BEH
CH. MRB
IXS VLC CHASSIS WIRING
GUTHRIE, IL
TR30A/800E
GIL-104.94-18
DOT#289 350T

SIEMENS INDUSTRY INC
LOUISVILLE DIVISION, LOUISVILLE, KY

REVISIONS				
NO.	DATE	BY	DESCRIPTION	APP. BY
1				
2				
3				
4				
5				

SIEMENS INDUSTRY INC

DES.: BEH	DATE: 12/10/15	JOB NO.: PICA10601	
CKD.: MRB	ISSUE DATE: N/A	EST. NO.: XP-7993	
DRN.: BEH	PLAN NO.: N/A	SHEET 18 OF 30	
P TIME: 11:21	P DATE: 10-FEB-2016	CAD ID.: GIL-104.94-18	

gil-104.94-18.dgn
10-FEB-2016

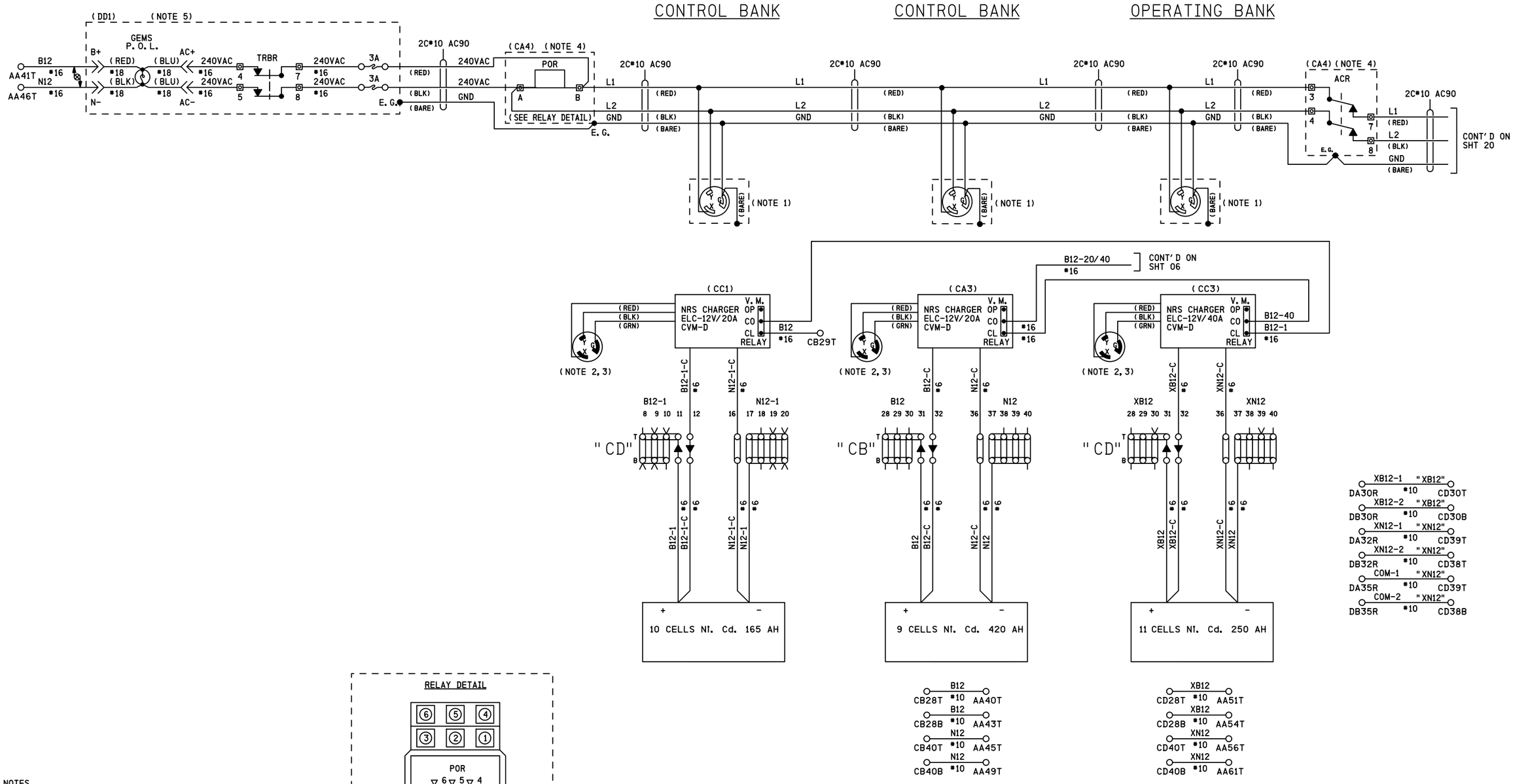

NO.	DATE	BY	DESCRIPTION	APP. BY
1				
2				
3				
4				
5				

REVISIONS

NOTES

1) 30A 250V TWIST LOCK RECEPTACLE HUBBELL HBL 2620
2) PLUG HUBBELL HBL 2621 REFER TO PS-902 PAGE 6
3) GROUND LUG LOCATED ON CHARGER HOUSING
4) PART OF SEARII POWER CONTROL AND INDICATION RELAY JUNCTION BOX
5) PART OF POWER OFF INDICATOR LIGHT REPEATER RELAY JUNCTION BOX (REFER TO PS-907 SHT 2A)

<< DENOTES WAGO TERMINAL

DENOTES TWISTED PAIR

RELAY DETAIL

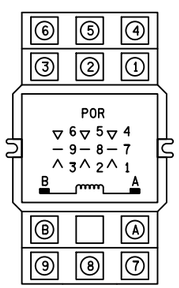

RELAY - POTTER & BRUMFIELD MODEL KUP-14A15-240 SOCKET MOUNTABLE 240 VAC W/ 3 FORM C CONTACTS

SOCKET - SCREW TERMINAL MODEL 27E121

SII 12 OCT 2015

PROPOSED
DESIGN NO. 13-0326
RED-IN YELLOW-OUT

AS INSTALLED
DATE
BY
(PRINT NAME)

PROPOSED D	M	Y	REVISIONS	D	C	COMPLETED D	M	Y	C

REGION SOUTHERN
SUB. GILMAN 349

SIGNALS AND COMMUNICATIONS HOMEWOOD
DES. BEH
12 OCTOBER 2015
CH. MRB

DC DISTRIBUTION

GUTHRIE, IL
TR30A/800E

GIL-104.94-19

DOT#289 350T

SIEMENS INDUSTRY INC

DES.: BEH	DATE: 12/10/15	JOB NO.: PICA10601	
CKD.: MRB	ISSUE DATE: N/A	EST. NO.: XP-7993	
DRN.: BEH	PLAN NO.: N/A	SHEET 19 OF 30	
P. TIME: 11:21	P. DATE: 10-FEB-2016	CAD ID.: GIL-104.94-19	

SIEMENS INDUSTRY INC
LOUISVILLE DIVISION, LOUISVILLE, KY

gil-104.94-19.dgn
10-FEB-2016