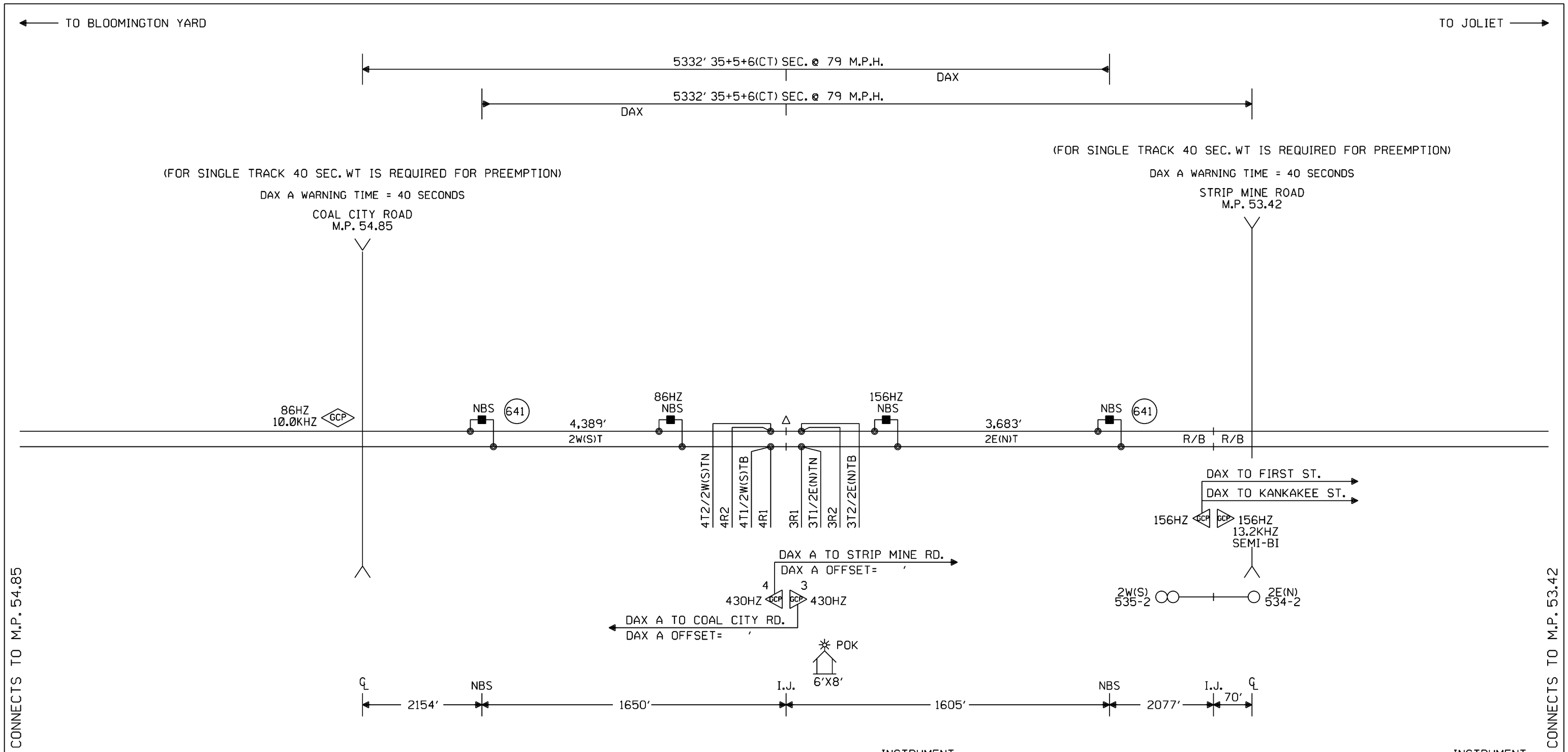

NOTES:

⊗ = TWISTED WIRES
ALL TRACK WIRES 2C. #6
INSULATED 1 TWIST PER FT.

TRANSMITTER AND RECEIVER LEADS
TO BE SEPARATED BY AT LEAST 12" IN TRENCH,
LENGTHS SHOULD NOT EXCEED MANUFACTURES
RECOMMENDATION.

ALL BUNGALOW WIRING TO BE #16 AWG FLEX
UNLESS OTHERWISE SPECIFIED EXCEPT ALL GROUND
WIRE TO BE #6 AWG FLEX OR LARGER.

REFER TO UP STANDARD DWG. FOR BUNGALOW
GROUNDING.

PORTABLE GENERATOR EXTENSION CORD
FOR 240V TO 240V IS PROVIDED AS WELL
AS A 120V TO 240V ADAPTER.

△ = ENSURE TRACK POLARITY IS
TRANSPOSED ACROSS ALL
INSULATED JOINTS.

OFFSET AND ISLAND DISTANCES
TO BE VERIFIED BY FIELD

W(S) ←○→ E(N)

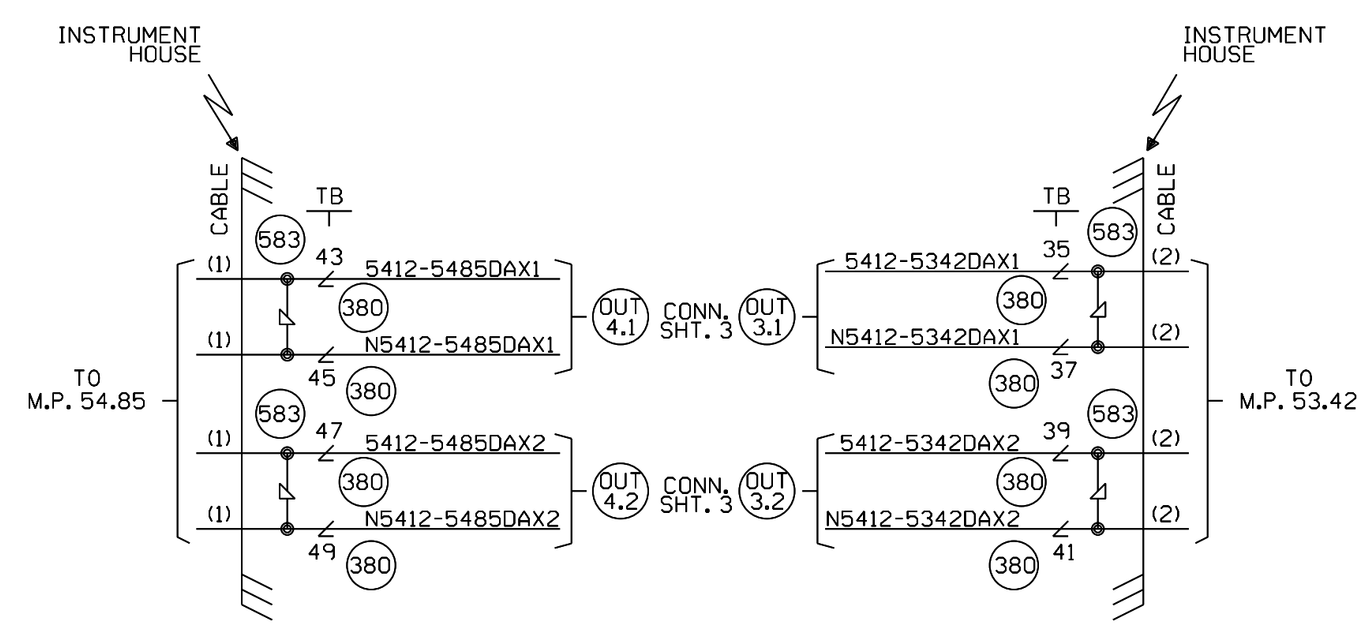

THE NBS'S FOR THE CROSSINGS FROM M.P. 45.77 TO 54.85
ARE LOCATED WITH ADDITIONAL CLEARANCE TIME
FOR FUTURE DOUBLE TRACK.

NEW SHEET

CABLE TABULATION

CABLE #1 7C #14 U.G.B.T. HOUSE TO M.P. 54.85
CABLE #2 7C #14 U.G.B.T. HOUSE TO M.P. 53.42

Designed: 7-15-15
HIGH SPEED RAIL
TIER 6
M.P. 45.77 TO 54.85
Rec#:
IS:
WO#: 10925
/NBT
/ / WIT/JVJ

MODIFICATION LEVEL	
O. A. LAST LEVEL CHECKED	DU
LAST LEVEL MOD THIS TYPICAL	DU
LAST LEVEL BY DESIGNER	DU
CHANGED FROM TYPICAL?	Y

REV 01.24.11 4K REMOTE.1

CIRCUIT MODIFICATIONS ARE NOT TO BE MADE WITHOUT AUTHORITY FROM THE OFFICE OF SIGNAL DESIGN

DATE: 07-15-15
DES: WIT
CHK: NBT
A.F.E. 10925

UNION PACIFIC RAILROAD

REGENERATIVE REPEATER
JOLIET SUBDIVISION

Office of Sr AVP Engineering - Signal/TCO Omaha, Nebraska

SH. 1
M.P. 54.12
ID= CSL5412.1S

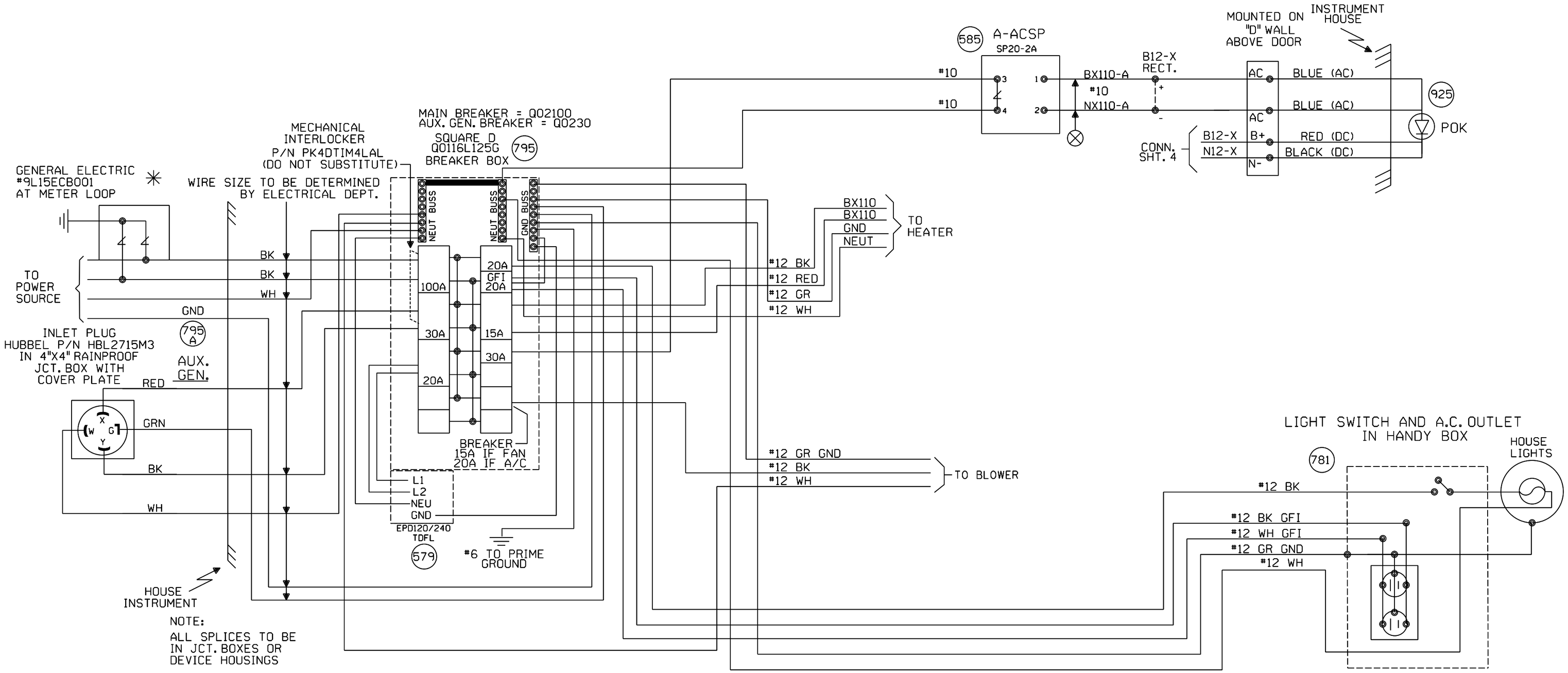

NEW SHEET

Designed: 7-15-15
HIGH SPEED RAIL
TIER 6
M.P. 45.77 TO 54.85
Rec*: WO*: 10925
IS: /NBT
/ / WIT/JVJ

MODIFICATION LEVEL	
O. A. LAST LEVEL CHECKED	DU
LAST LEVEL MOD THIS TYPICAL	DU
LAST LEVEL BY DESIGNER	DU
CHANGED FROM TYPICAL?	Y

REV 01/28/14 2TMLHBINTC.2S

CIRCUIT MODIFICATIONS ARE NOT TO BE MADE WITHOUT AUTHORITY FROM THE OFFICE OF SIGNAL DESIGN

DATE: 07-15-15
DES: WIT
CHK: NBT
A.F.E. 10925

UNION PACIFIC RAILROAD

REGENERATIVE REPEATER
JOLIET SUBDIVISION

Office of Sr AVP Engineering - Signal/TCO Omaha, Nebraska

SH. 2
M.P. 54.12
ID= CSL5412.2S

GCP PROGRAMING NOTES:

TRACK 1 & 2 CARDS ARE INSTALLED BUT ALL PRIMES AND DAXES ARE TURNED OFF.
OUT 3.1 AND OUT4.1 ARE NOT PROGRAMED AT THIS TIME.

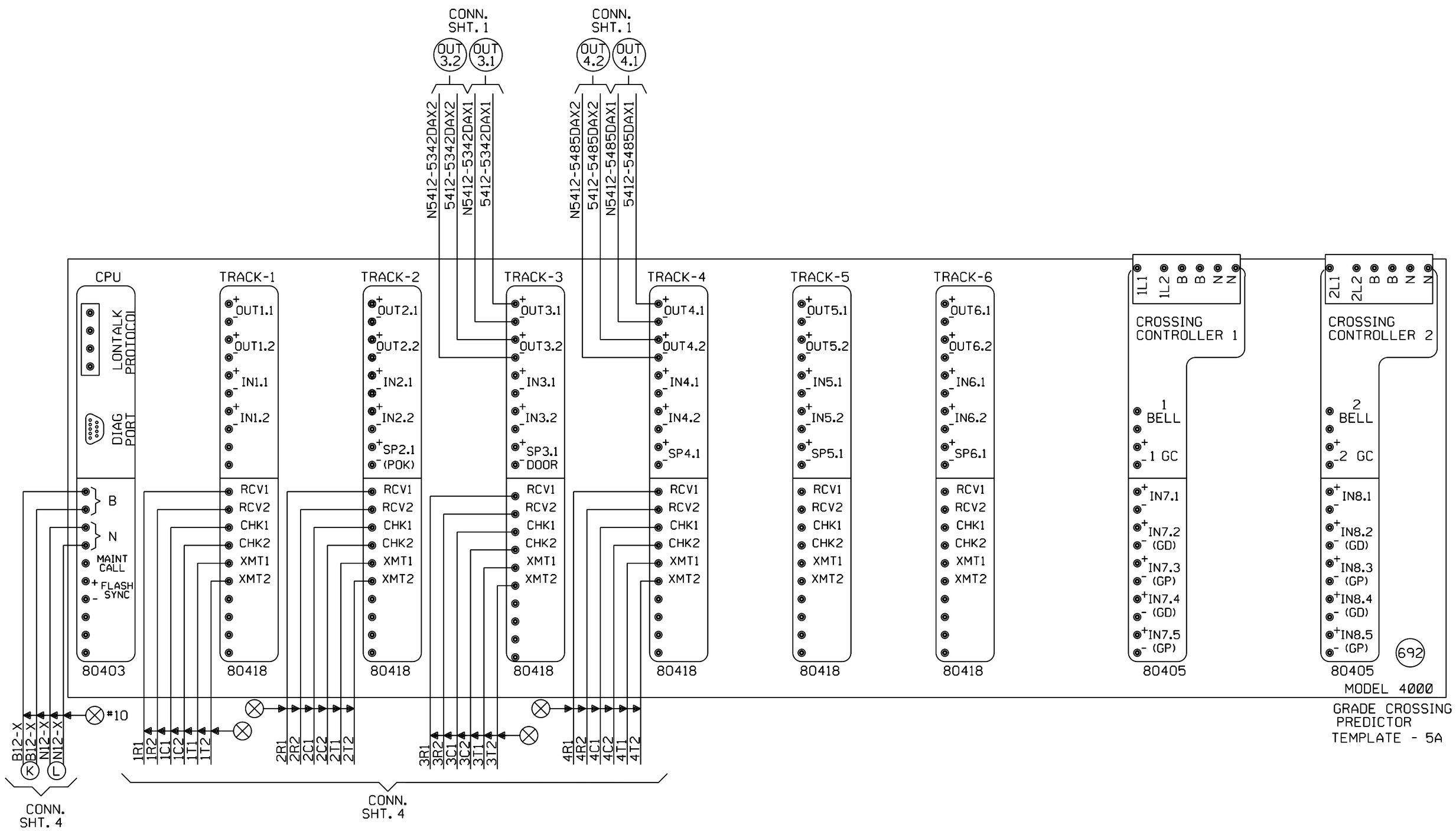

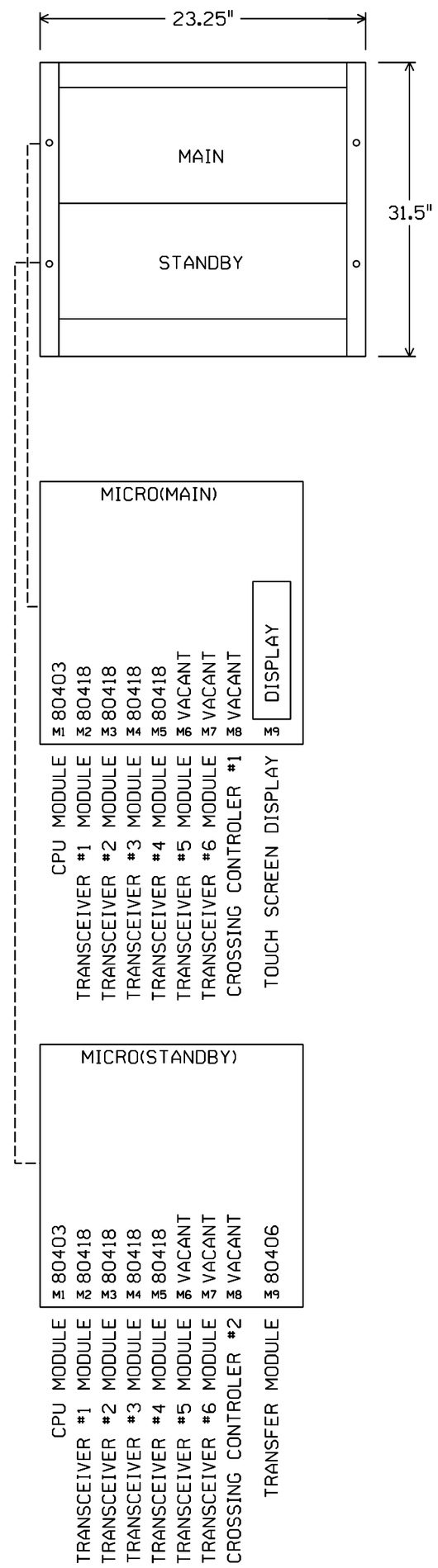

"Mf" FREQUENCY (HZ)	MAXIMUM TRANSMIT WIRE LENGTH (FEET)
86	100
114	125
156	150
211	200
285-970	250

NOTE:
EACH TRANSMITTER TO RAIL WIRE FROM XMT1 AND XMT2 MUST NOT EXCEED THE MAXIMUM LENGTH SPECIFIED IN THE TABLE SHOWN. THE RECEIVER WIRE LENGTH IS NOT CRITICAL. DOES NOT APPLY TO 6 TRACK WIRE APPLICATION.

NEW SHEET

Designed: 7-15-15
HIGH SPEED RAIL TIER 6
M.P. 45.77 TO 54.85
Rec*: WO*: 10925
IS: /NBT
/ / WIT/JVJ

MODIFICATION LEVEL	
O. A. LAST LEVEL CHECKED	DU
LAST LEVEL MOD THIS TYPICAL	DU
LAST LEVEL BY DESIGNER	DU
CHANGED FROM TYPICAL?	Y

REV 01.24.11 4K 2TKGF.3

CIRCUIT MODIFICATIONS ARE NOT TO BE MADE WITHOUT AUTHORITY FROM THE OFFICE OF SIGNAL DESIGN

DATE: 07-15-15
DES: WIT
CHK: NBT
A.F.E. 10925

UNION PACIFIC RAILROAD

REGENERATIVE REPEATER
JOLIET SUBDIVISION

Office of Sr AVP Engineering - Signal/TCO Omaha, Nebraska

SH. 3
M.P. 54.12
ID= CSL5412.3X

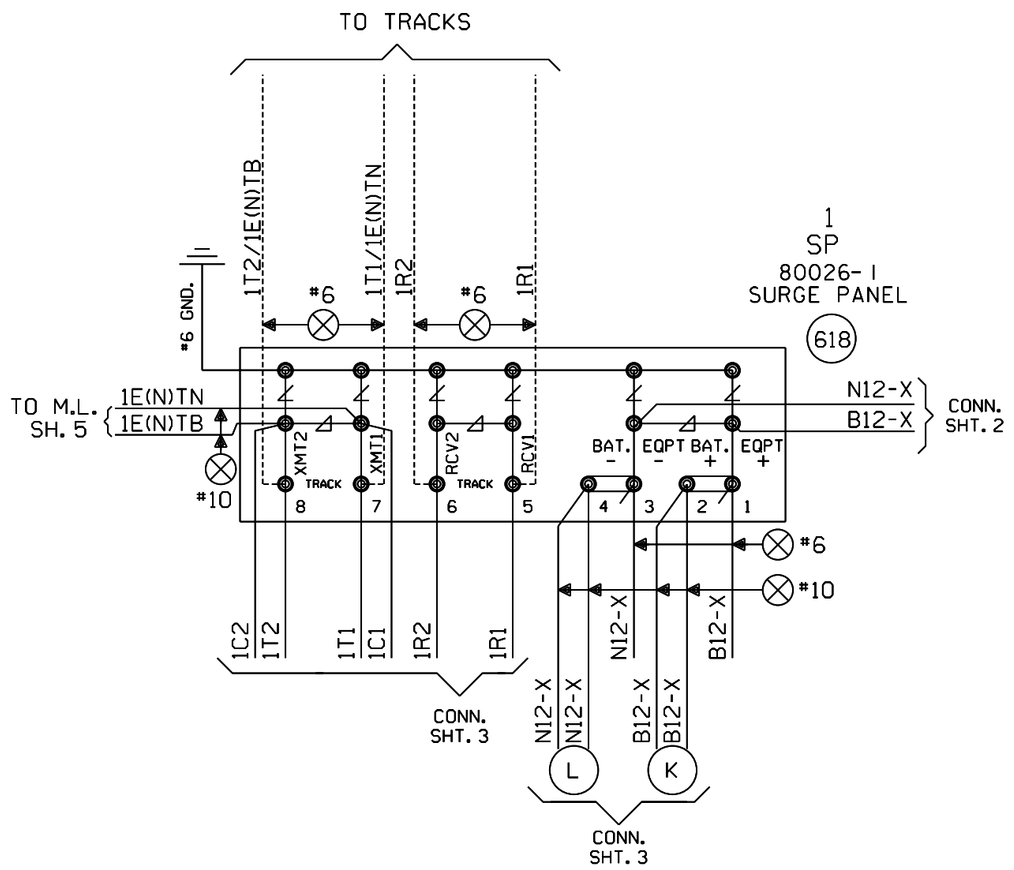

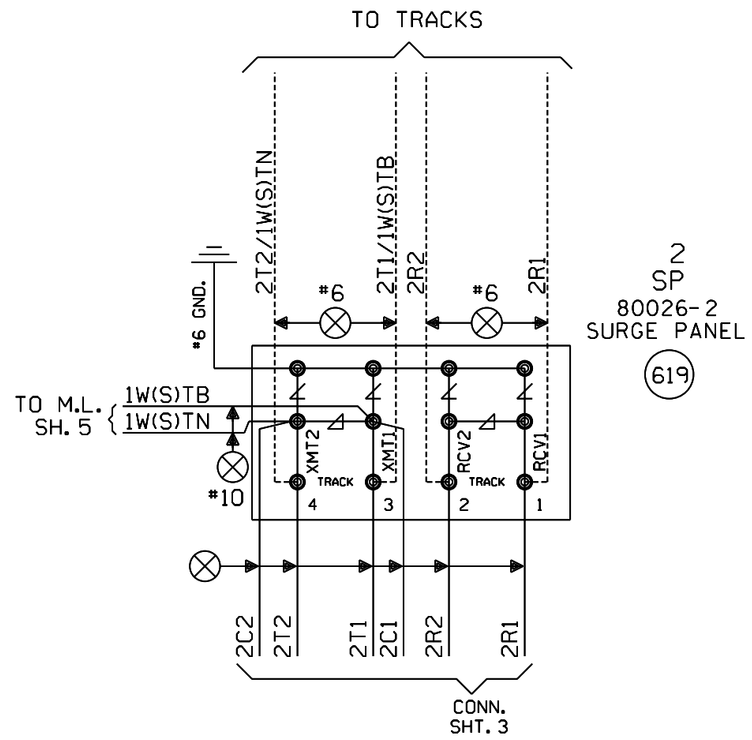

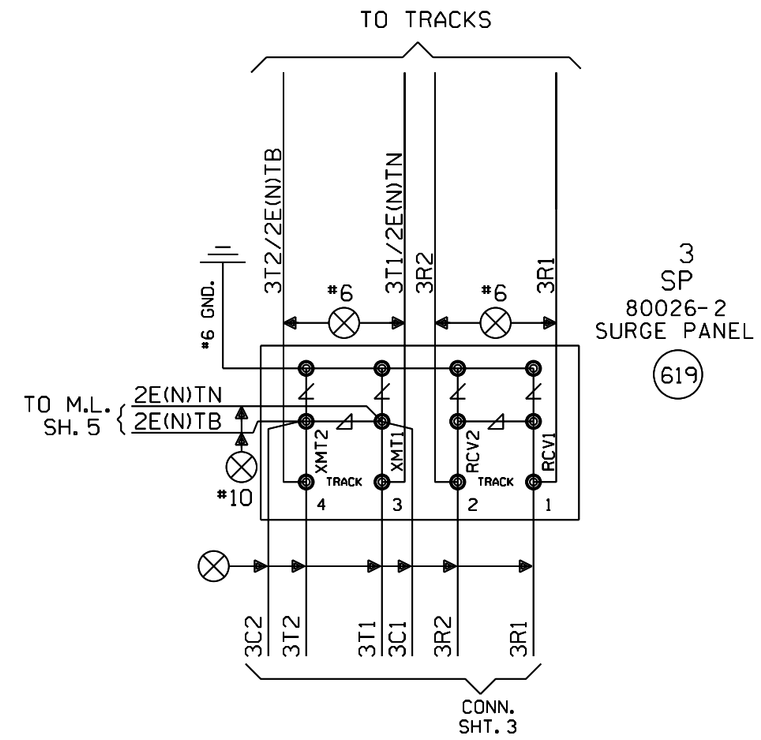

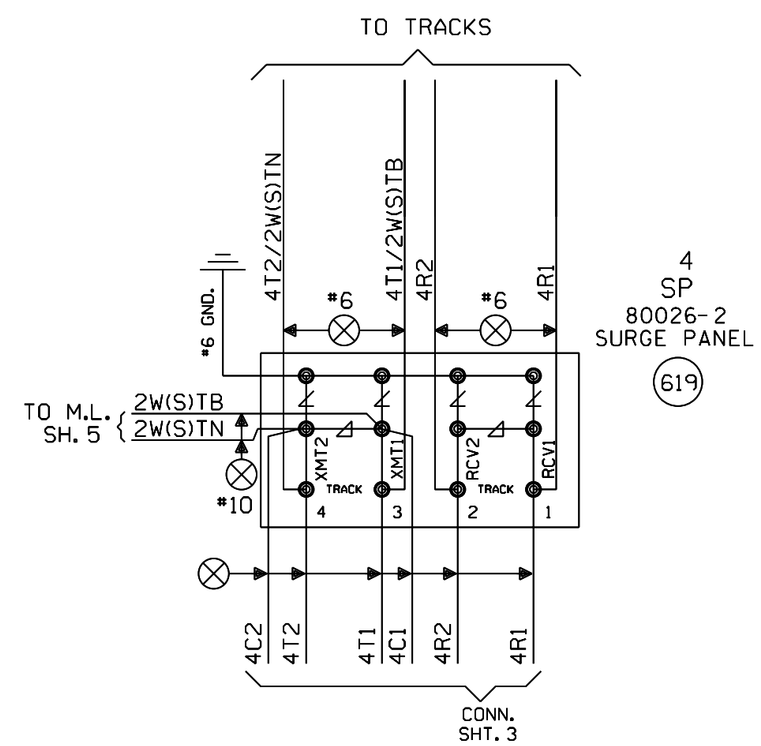

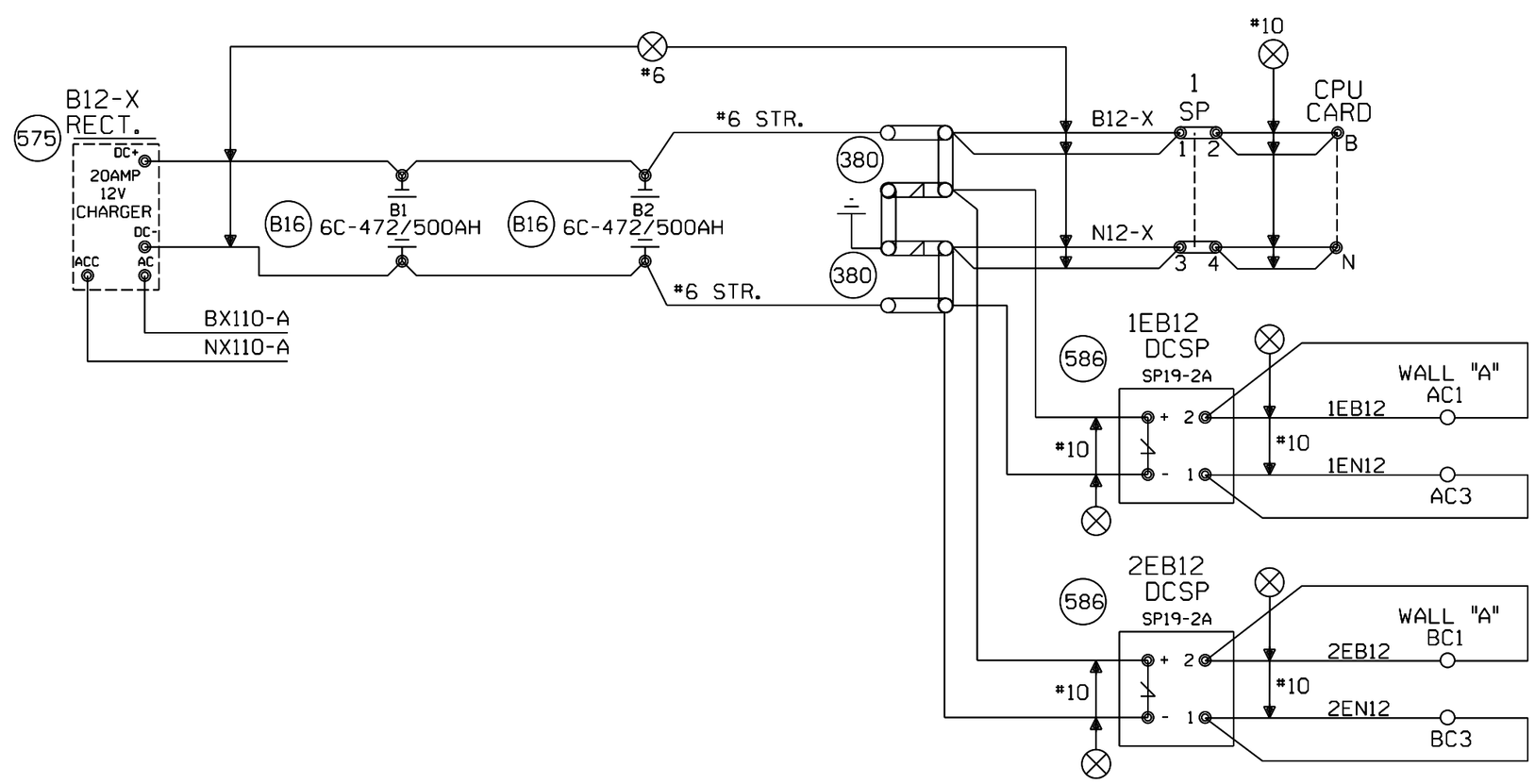

---------- = FOR USE WITH FUTURE DOUBLE TRACK

NEW SHEET

Designed: 7-15-15
HIGH SPEED RAIL
TIER 6
M.P. 45.77 TO 54.85
Rec*: WO*: 10925
IS: /NBT
/ / WIT/JVJ

MODIFICATION LEVEL	
O. A. LAST LEVEL CHECKED	DU
LAST LEVEL MOD THIS TYPICAL	DU
LAST LEVEL BY DESIGNER	DU
CHANGED FROM TYPICAL?	Y

Rev 01.24.11 4K REMOTE.4

CIRCUIT MODIFICATIONS ARE NOT TO BE MADE WITHOUT AUTHORITY FROM THE OFFICE OF SIGNAL DESIGN

DATE: 07-15-15
DES: WIT
CHK: NBT
A.F.E. 10925

UNION PACIFIC RAILROAD

REGENERATIVE REPEATER
JOLIET SUBDIVISION

Office of Sr AVP Engineering - Signal/TCO Omaha, Nebraska

SH. 4
M.P. 54.12
ID= CSL5412.4X

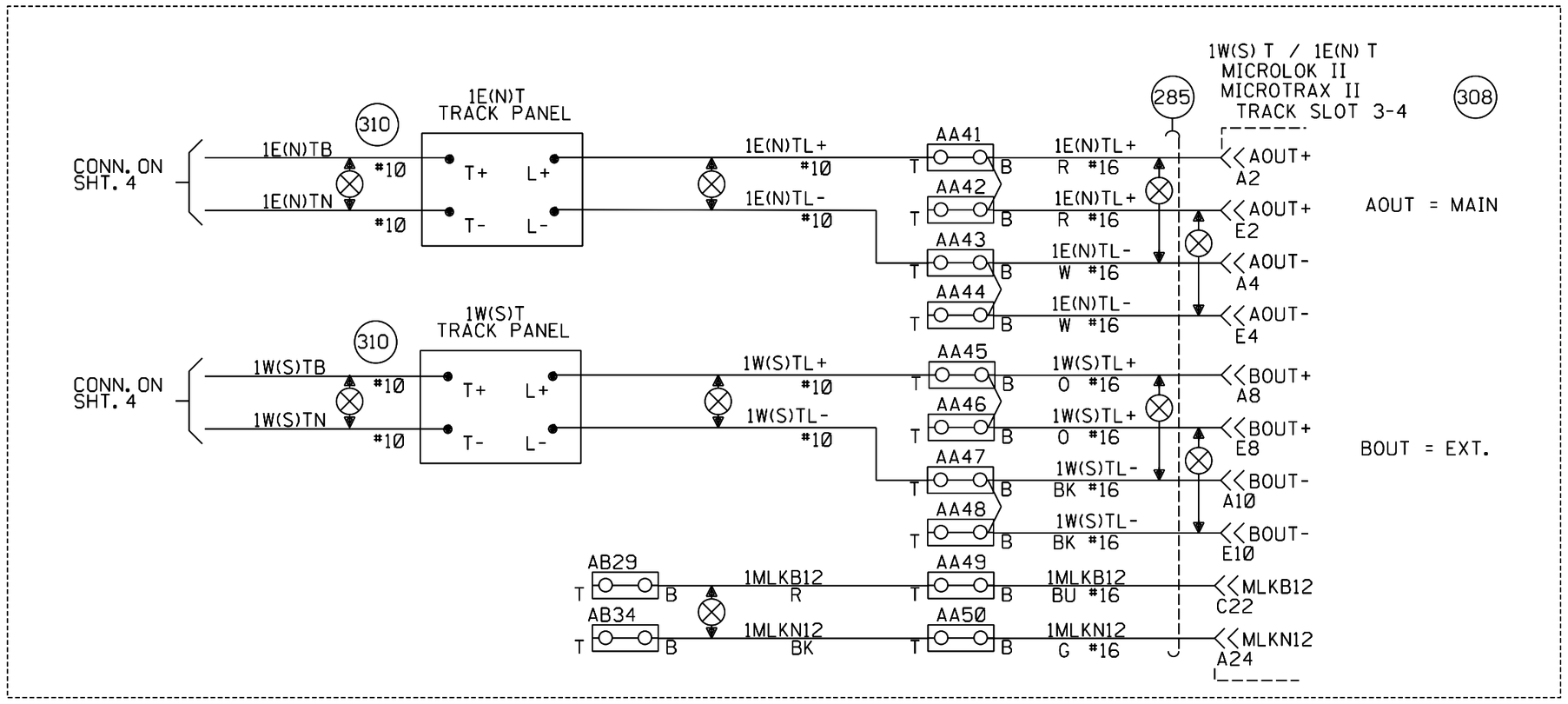

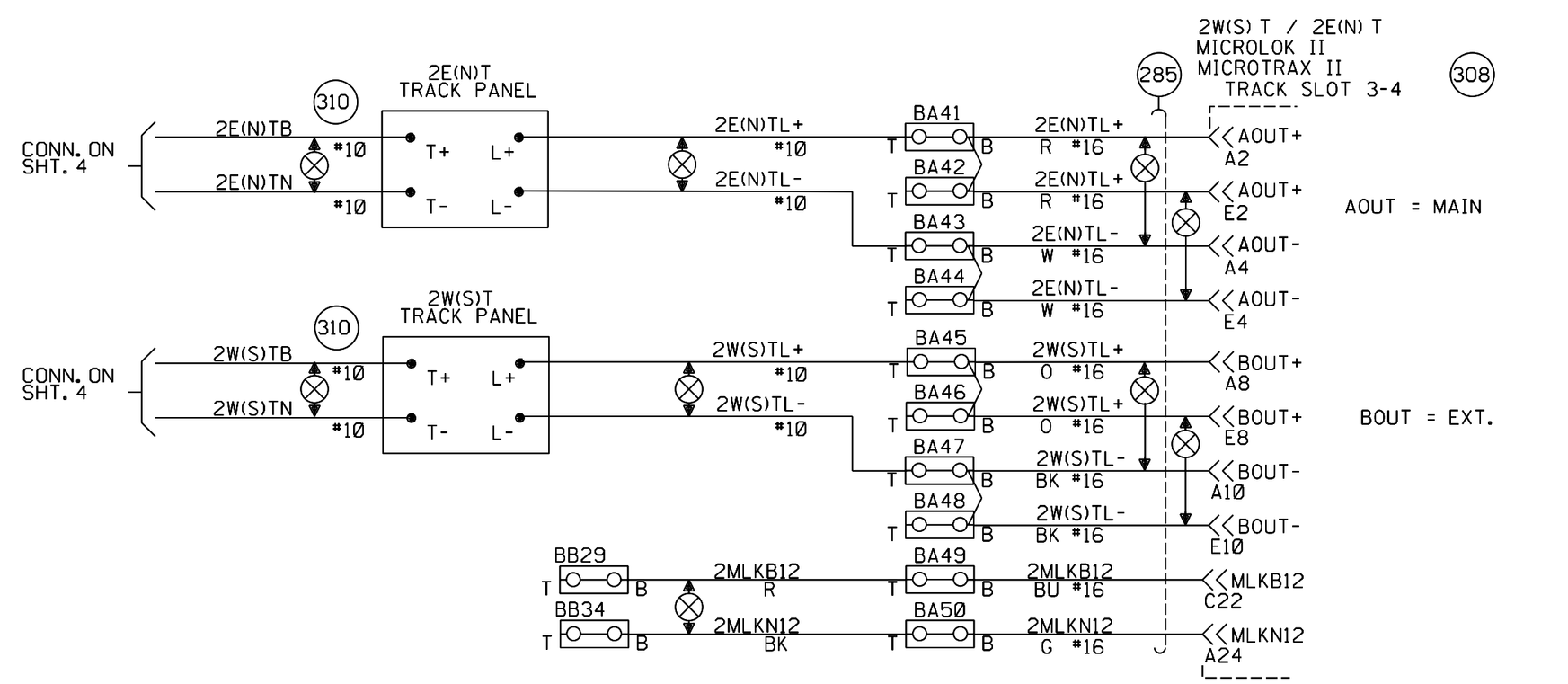

---------- = FOR USE WITH FUTURE DOUBLE TRACK

NEW SHEET

Designed: 7-15-15
HIGH SPEED RAIL
TIER 6
M.P. 45.77 TO 54.85
Rec*: WO*: 10925
IS: /NBT
/ / WIT/JVJ

MODIFICATION LEVEL	
O. A. LAST LEVEL CHECKED	DU
LAST LEVEL MOD THIS TYPICAL	DU
LAST LEVEL BY DESIGNER	DU
CHANGED FROM TYPICAL?	Y

Rev 01/28/14 2TMLHBINTC.1MX

CIRCUIT MODIFICATIONS ARE NOT TO BE MADE WITHOUT AUTHORITY FROM THE OFFICE OF SIGNAL DESIGN

DATE: 07-15-15
DES: WIT
CHK: NBT
A.F.E. 10925

UNION PACIFIC RAILROAD

REGENERATIVE REPEATER
JOLIET SUBDIVISION

Office of Sr AVP Engineering - Signal/TCO Omaha, Nebraska

SH. 5
M.P. 54.12
ID= CSL5412.5S

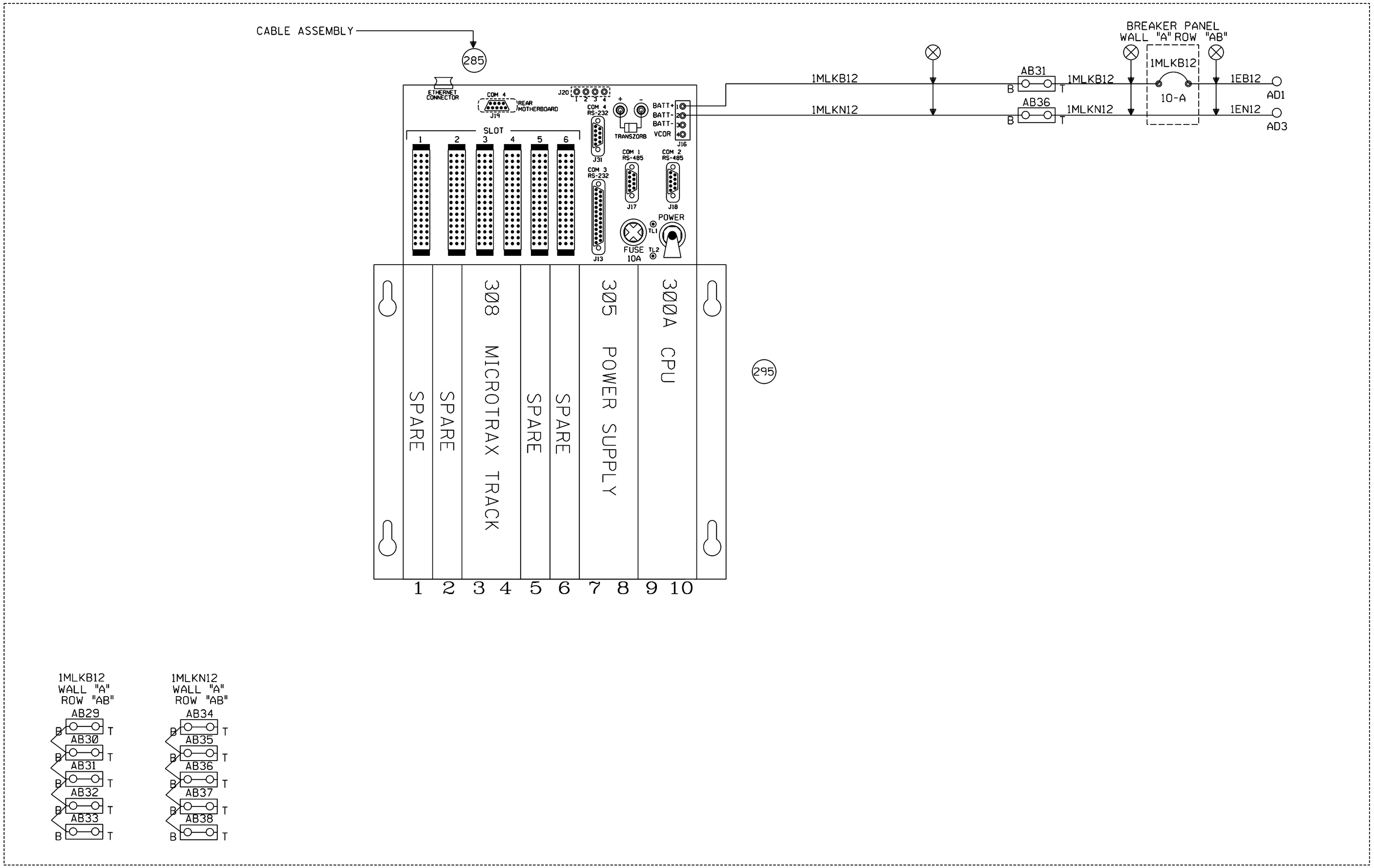

---------- = FOR USE WITH FUTURE DOUBLE TRACK

TRACK # 1 **NEW SHEET**

Designed: 7-15-15 HIGH SPEED RAIL TIER 6 M.P. 45.77 TO 54.85 Rec#: WO#: 10925 IS: /NBT / WIT/JVJ	MODIFICATION LEVEL		CIRCUIT MODIFICATIONS ARE NOT TO BE MADE WITHOUT AUTHORITY FROM THE OFFICE OF SIGNAL DESIGN	DATE: 07-15-15 DES: WIT CHK: NBT A.F.E. 10925	**UNION PACIFIC RAILROAD** REGENERATIVE REPEATER JOLIET SUBDIVISION Office of Sr AVP Engineering - Signal/TCO Omaha, Nebraska
	Q.A. LAST LEVEL CHECKED	DU			
	LAST LEVEL MOD THIS TYPICAL	DU			
	LAST LEVEL BY DESIGNER	DU			
	CHANGED FROM TYPICAL?	Y			
	Rev 01/28/14 2TMLHBINTC.4S				

SH.	6
M.P.	54.12
ID=	CSL5412.6S

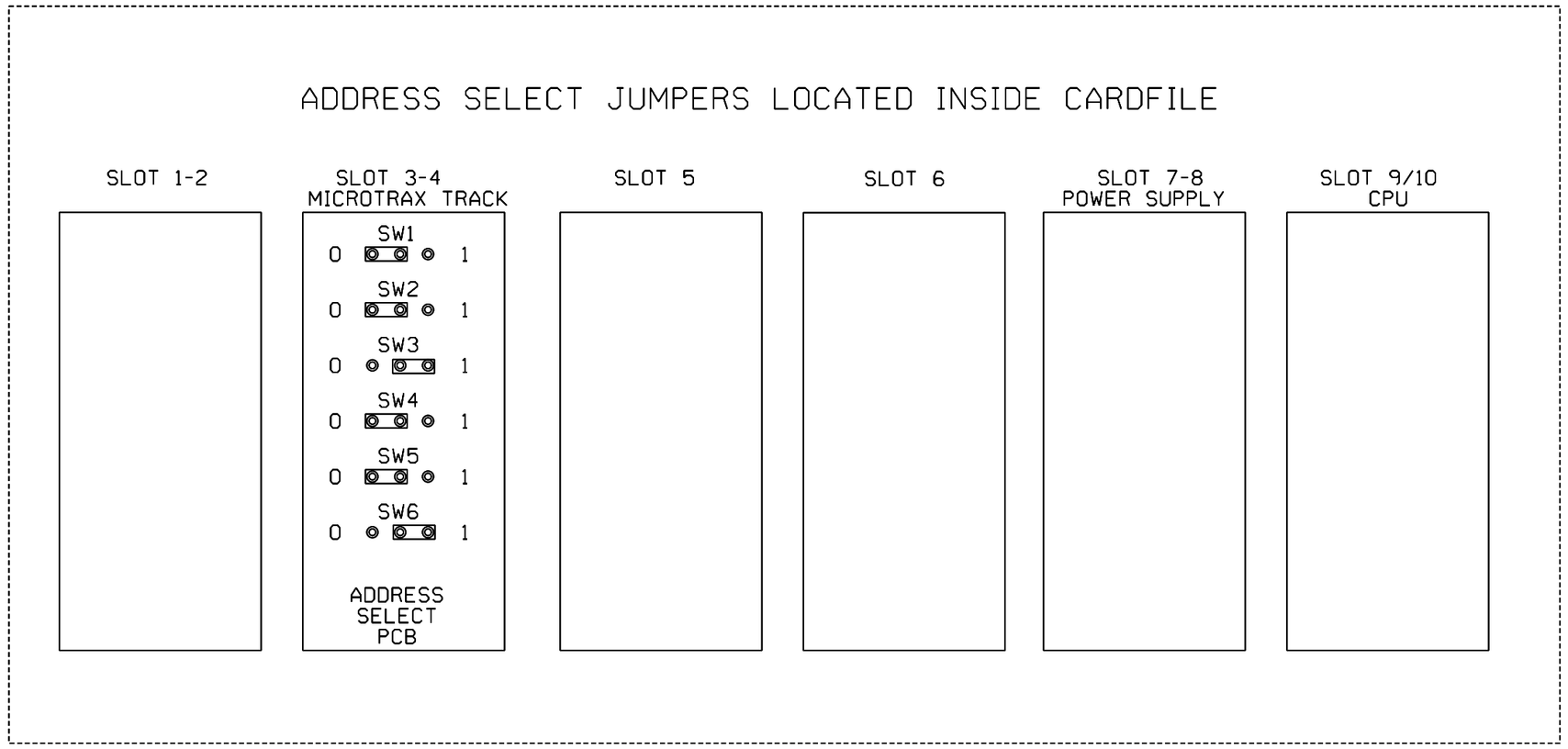

NOTE: FOR PTC COMPATIBLE CPU JUMPER SETTINGS REFER TO
ANSALDO MANUAL 1D1.0028 PAGE 1-26 1-27 1-28 REV.1 DATE 8/2009

FOR STANDARD CPU JUMPER SETTINGS REFER TO ANSALDO MANUAL
SM-6800B PAGE 2-12, 2-13 REV.2.5 DATE 9/2000

ML8RRH REV B

15 SEC SLOW PICK ET TO PREVENT JOINT HOP	
15 SEC SLOW PICK WT TO PREVENT JOINT HOP	
PROGRAM ID 1 (BINARY 1)	
PROGRAM ID 2 (BINARY 2)	
PROGRAM ID 3 (BINARY 4)	X
PROGRAM ID 4 (BINARY 8)	
PROGRAM ID 5 (BINARY 16)	
PROGRAM ID 6 (BINARY 32)	X
PROGRAM ID 7 (BINARY 64)	X
PROGRAM ID 8 (BINARY 128)	
CODE P?	X

PLACE AN "X" IN THE BOX FOR DESIRED CONFIGURATION.

---------- = FOR USE WITH FUTURE DOUBLE TRACK

TRACK # 1 **NEW SHEET**

Designed: 7-15-15
HIGH SPEED RAIL
TIER 6
M.P. 45.77 TO 54.85
Rec*: WO*: 10925
IS: /NBT
/ / WIT/JVJ

MODIFICATION LEVEL	
Q. A. LAST LEVEL CHECKED	DU
LAST LEVEL MOD THIS TYPICAL	DU
LAST LEVEL BY DESIGNER	DU
CHANGED FROM TYPICAL?	Y

REV 01/28/14 2TMLHBINTC.4AS

CIRCUIT MODIFICATIONS ARE NOT TO BE MADE WITHOUT AUTHORITY FROM THE OFFICE OF SIGNAL DESIGN

DATE: 07-15-15
DES: WIT
CHK: NBT
A.F.E. 10925

UNION PACIFIC RAILROAD

REGENERATIVE REPEATER
JOLIET SUBDIVISION

Office of Sr AVP Engineering - Signal/TCO Omaha, Nebraska

SH. 6A
M.P. 54.12
ID= CSL5412.6AS

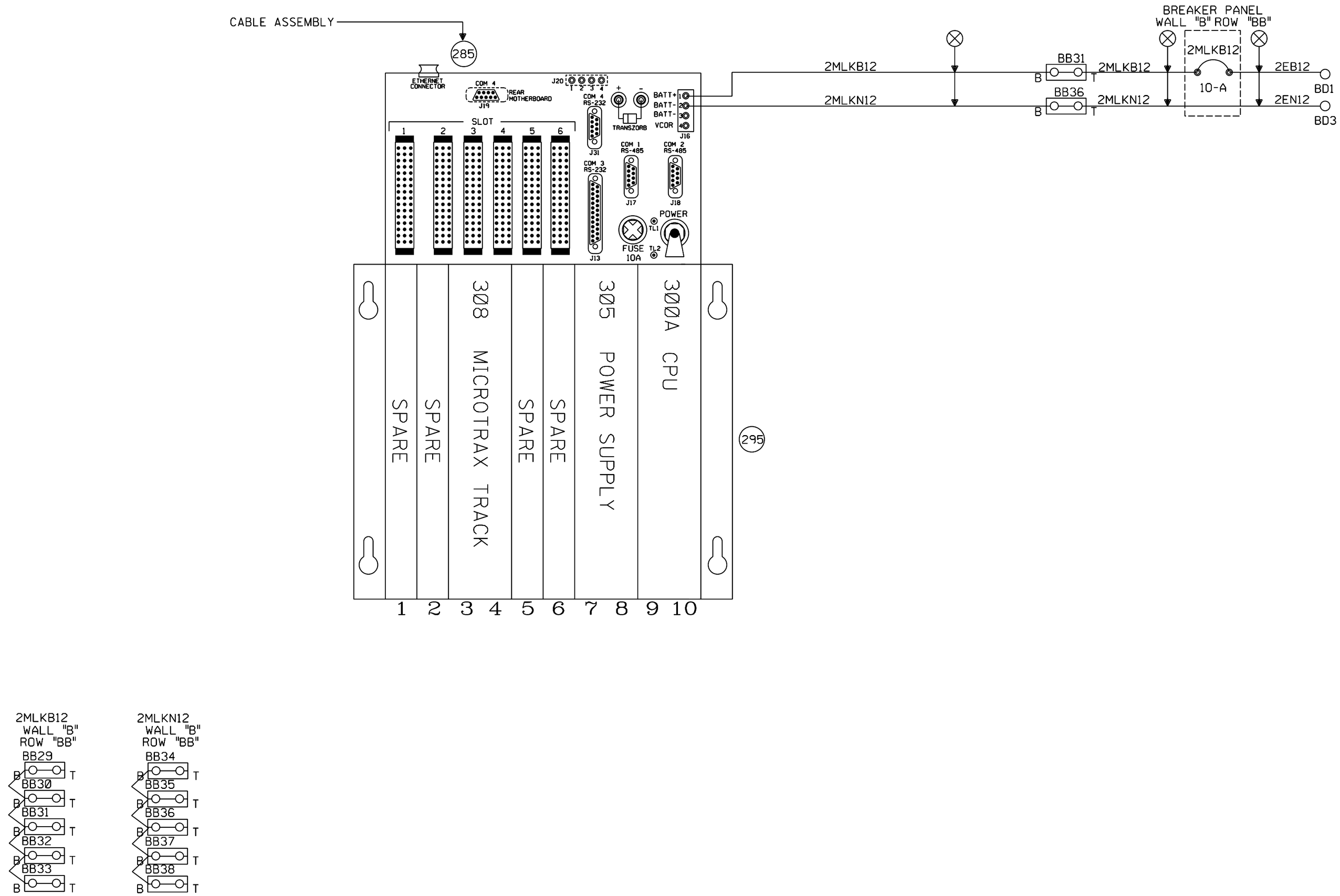

TRACK # 2 **NEW SHEET**

					Designed: 7-15-15 HIGH SPEED RAIL TIER 6 M.P. 45.77 TO 54.85 Rec#: WO#: 10925 IS: /NBT / / WIT/JVJ	MODIFICATION LEVEL		CIRCUIT MODIFICATIONS ARE NOT TO BE MADE WITHOUT AUTHORITY FROM THE OFFICE OF SIGNAL DESIGN	DATE: 07-15-15	UNION PACIFIC RAILROAD	SH. 7
						Q. A. LAST LEVEL CHECKED	DU		DES: WIT	REGENERATIVE REPEATER JOLIET SUBDIVISION	
						LAST LEVEL MOD THIS TYPICAL	DU		CHK: NBT		M.P. 54.12
						LAST LEVEL BY DESIGNER	DU		A.F.E. 10925	Office of Sr AVP Engineering - Signal/TCO Omaha, Nebraska	ID= CSL5412.7S
						CHANGED FROM TYPICAL?	Y				
						REV 01/28/14 2TMLHBINTC.5S					

ADDRESS SELECT JUMPERS LOCATED INSIDE CARDFILE

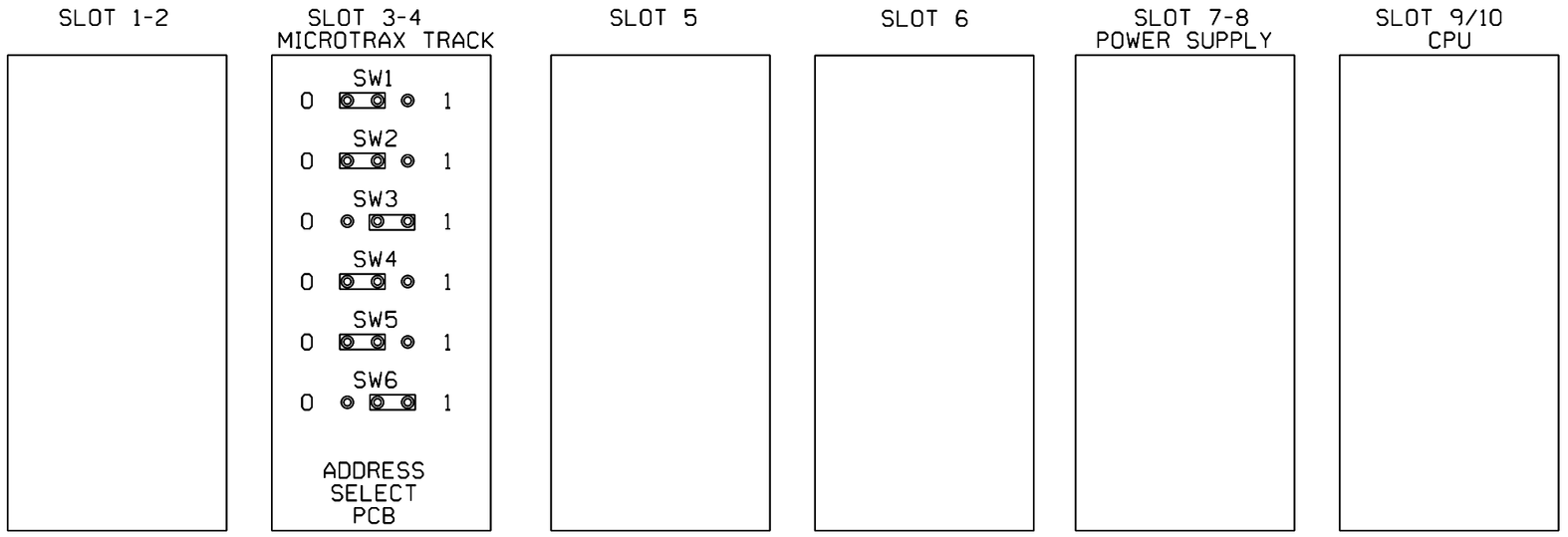

NOTE: FOR PTC COMPATIBLE CPU JUMPER SETTINGS REFER TO ANSALDO MANUAL 1D1.0028 PAGE 1-26 1-27 1-28 REV. 1 DATE 8/2009

FOR STANDARD CPU JUMPER SETTINGS REFER TO ANSALDO MANUAL SM-6800B PAGE 2-12, 2-13 REV.2.5 DATE 9/2000

ML8RRH REV B

15 SEC SLOW PICK ET TO PREVENT JOINT HOP	
15 SEC SLOW PICK WT TO PREVENT JOINT HOP	
PROGRAM ID 1 (BINARY 1)	
PROGRAM ID 2 (BINARY 2)	
PROGRAM ID 3 (BINARY 4)	X
PROGRAM ID 4 (BINARY 8)	
PROGRAM ID 5 (BINARY 16)	
PROGRAM ID 6 (BINARY 32)	X
PROGRAM ID 7 (BINARY 64)	X
PROGRAM ID 8 (BINARY 128)	
CODE P?	X

PLACE AN "X" IN THE BOX FOR DESIRED CONFIGURATION. ↑

TRACK # 2 **NEW SHEET**

Designed: 7-15-15
HIGH SPEED RAIL
TIER 6
M.P. 45.77 TO 54.85
Rec*: WO*: 10925
IS: /NBT
/ / WIT/JVJ

MODIFICATION LEVEL	
Q. A. LAST LEVEL CHECKED	DU
LAST LEVEL MOD THIS TYPICAL	DU
LAST LEVEL BY DESIGNER	DU
CHANGED FROM TYPICAL?	Y

REV 01/28/14 2TMLHBINTC.5AS

CIRCUIT MODIFICATIONS ARE NOT TO BE MADE WITHOUT AUTHORITY FROM THE OFFICE OF SIGNAL DESIGN

DATE: 07-15-15
DES: WIT
CHK: NBT
A.F.E. 10925

UNION PACIFIC RAILROAD

REGENERATIVE REPEATER
JOLIET SUBDIVISION

Office of Sr AVP Engineering - Signal/TCO Omaha, Nebraska

SH. 7A
M.P. 54.12
ID= CSL5412.7AS

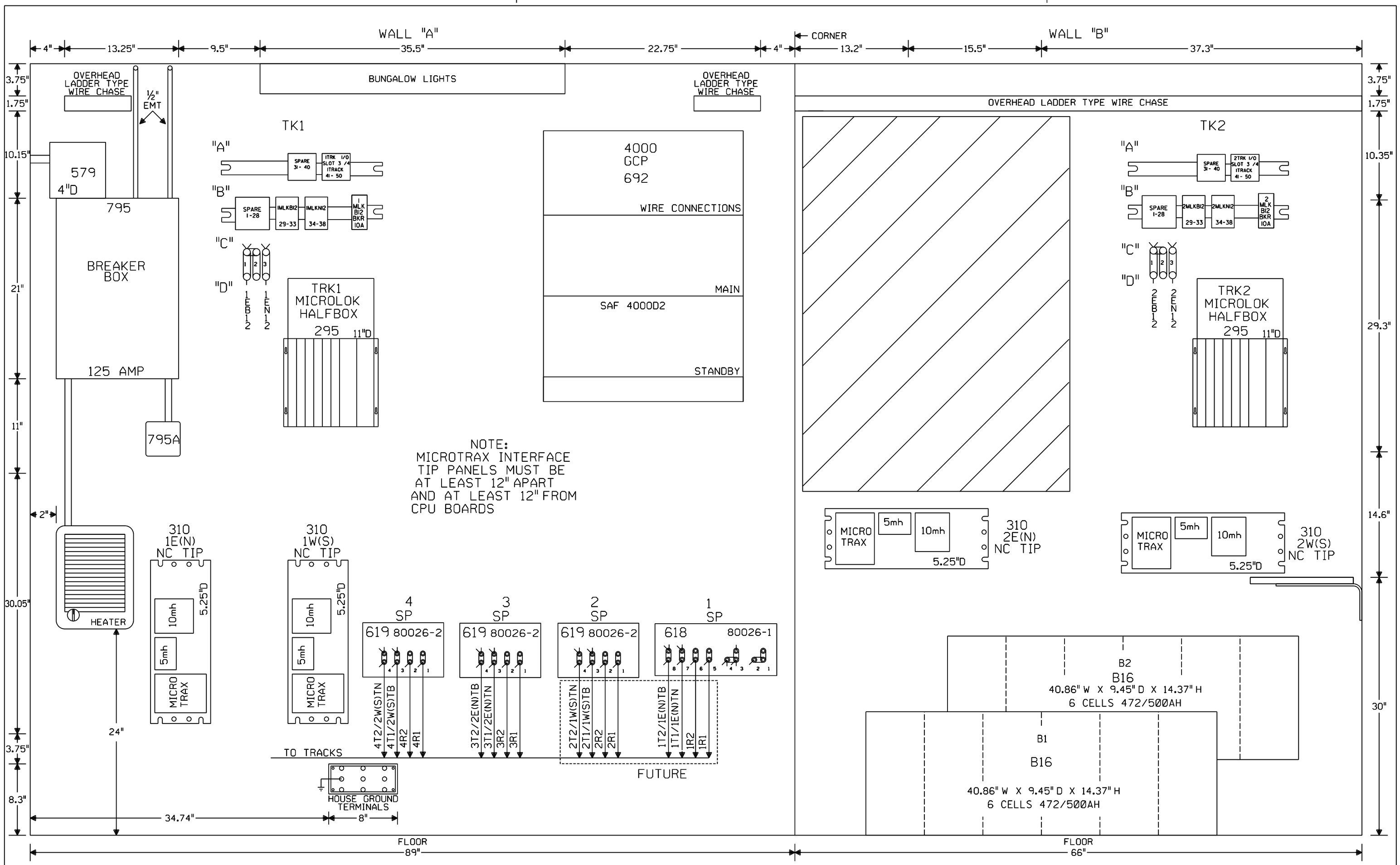

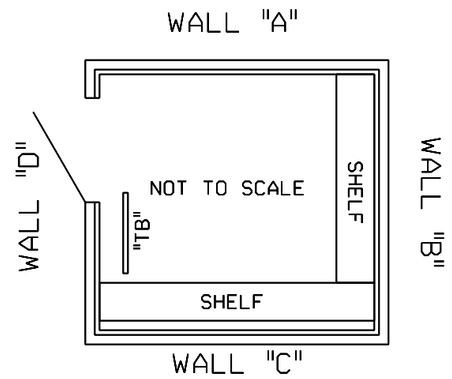

6X8 WAYSIDE/XING HOUSE WITH BLOWER 24" TERM BOARD U.P. PART#520-2549

NOTE: ALL DIMENSIONS SHOWN ARE APPROXIMATE.

NEW SHEET

Designed: 7-15-15
HIGH SPEED RAIL
TIER 6
M.P. 45.77 TO 54.85
Rec#: WO#: 10925
IS: /NBT / WIT/JVJ

MODIFICATION LEVEL	
O. A. LAST LEVEL CHECKED	DU
LAST LEVEL MOD THIS TYPICAL	DU
LAST LEVEL BY DESIGNER	DU
CHANGED FROM TYPICAL?	Y

REV 01/28/14 2TMLHBINTC.6S

CIRCUIT MODIFICATIONS ARE NOT TO BE MADE WITHOUT AUTHORITY FROM THE OFFICE OF SIGNAL DESIGN

DATE:	07-15-15
DES:	WIT
CHK:	NBT
A.F.E.	10925

UNION PACIFIC RAILROAD

REGENERATIVE REPEATER
JOLIET SUBDIVISION

Office of Sr AVP Engineering - Signal/TCO Omaha, Nebraska

SH. 8

M.P. 54.12

ID= CSL5412.8S

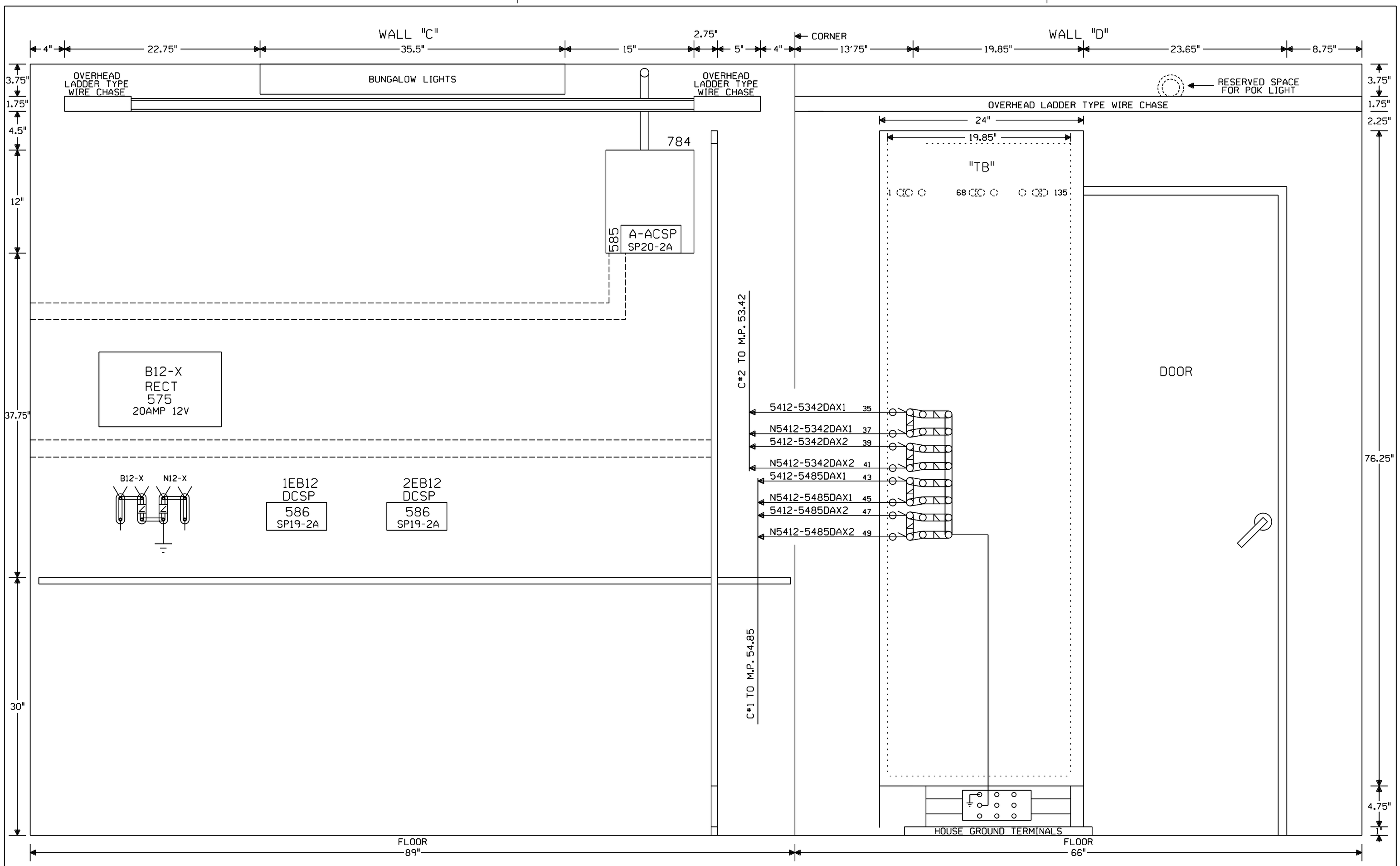

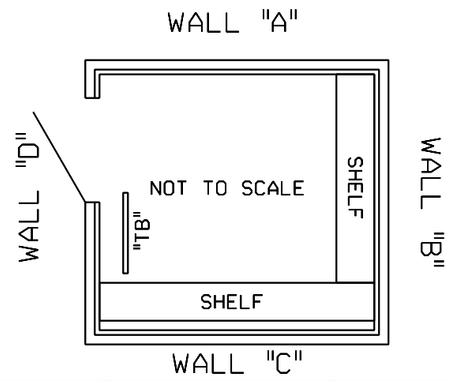

NOTE: ALL DIMENSIONS SHOWN ARE APPROXIMATE.

NEW SHEET

Designed: 7-15-15
HIGH SPEED RAIL
TIER 6
M.P. 45.77 TO 54.85
Rec#: WO#: 10925
IS: /NBT
/ /WIT/JVJ

MODIFICATION LEVEL	
Q.A. LAST LEVEL CHECKED	DU
LAST LEVEL MOD THIS TYPICAL	DU
LAST LEVEL BY DESIGNER	DU
CHANGED FROM TYPICAL?	Y

REV 01/28/14 2TMLHBINTC.7S

CIRCUIT MODIFICATIONS ARE NOT TO BE MADE WITHOUT AUTHORITY FROM THE OFFICE OF SIGNAL DESIGN

DATE: 07-15-15
DES: WIT
CHK: NBT
A.F.E. 10925

UNION PACIFIC RAILROAD

REGENERATIVE REPEATER
JOLIET SUBDIVISION

Office of Sr AVP Engineering - Signal/TCO Omaha, Nebraska

SH. 9
M.P. 54.12
ID= CSL5412.9S

Minimum Program Steps Report

Location and SIN

DOT Number: 000000R
Milepost Number: 54.12
Site Name: WILMINGTON, IL

SIN: 762010010016 *

* Parameter is part of office check number calculation.

MCF and Template Selection

MCF Name: GCP-T6X-02-6.mcf
MCF Revision: 26
MCFCRC: 494D2656

Template = 5A:3 Remote pairs (OCCN) *

* Parameter is part of office check number calculation.

Minimum Program Steps

TEMPLATE: module configuration
Track 3/PSO 2 Slot = Track (OCCN) *
Track 4/PSO 3 Slot = Track (OCCN) *

TEMPLATE: track 1-Remote Dax
Track 1 : GCP Transmit Level = Medium (Set in Field,TCN)

TEMPLATE: track 2-Remote Dax
Track 2 : GCP Transmit Level = Medium (Set in Field,TCN)

TEMPLATE: track 3-Remote Dax
Track 3 : GCP Frequency = 430 Hz (OCCN) *
Track 3 : Approach Distance = 1605 ft (OCCN) *
Track 3 : Dax A Warning Time = 40 sec (OCCN) *
Track 3 : Dax A Offset Distance = 3727 ft (OCCN) *
Track 3 : GCP Transmit Level = Medium (Set in Field,TCN)

TEMPLATE: track 4-Remote Dax
Track 4 : GCP Frequency = 430 Hz (OCCN) *
Track 4 : Approach Distance = 1650 ft (OCCN) *
Track 4 : Dax A Warning Time = 40 sec (OCCN) *
Track 4 : Dax A Offset Distance = 3682 ft (OCCN) *
Track 4 : GCP Transmit Level = Medium (Set in Field,TCN)

TEMPLATE: OOS
OOS Timeout = 1 hrs (Set in Field)

TEMPLATE: OP assignment 1
OUT 3.2 = T4 Dax A (OCCN) *

TEMPLATE: OP assignment 2
OUT 4.2 = T3 Dax A (OCCN) *

PREDICTORS: track 1
Track 1 : Dax A Used = No (OCCN) *

PREDICTORS: track 2
Track 2 : Dax A Used = No (OCCN) *

ADVANCED: site options
Daylight Savings = Off (Set in Field)

* Parameter is part of office check number calculation.

Check Numbers

Office Check Number: 726DCC44
Config. Check Number: 7D568368
(Based on MCF Revision 26)

Parameters not part of office check number calculation:

Track 1 : GCP Transmit Level = Medium (Set in Field)
Track 2 : GCP Transmit Level = Medium (Set in Field)
Track 3 : GCP Transmit Level = Medium (Set in Field)
Track 4 : GCP Transmit Level = Medium (Set in Field)
OOS Timeout = 1 hrs (Set in Field)
Daylight Savings = Off (Set in Field)

Comments

<none>

Configuration Package File

Filename: CSL5412_000000R.pac
Path: C:\PAC File\
Date/Time: 12/14/2015 13:04:39