PLAN MUST NOT BE MODIFIED WITHOUT APPROVAL OF SIGNAL ENGINEERING COPYRIGHT 2015 BNSF RAILWAY COMPANY. ALL RIGHTS RESERVED.

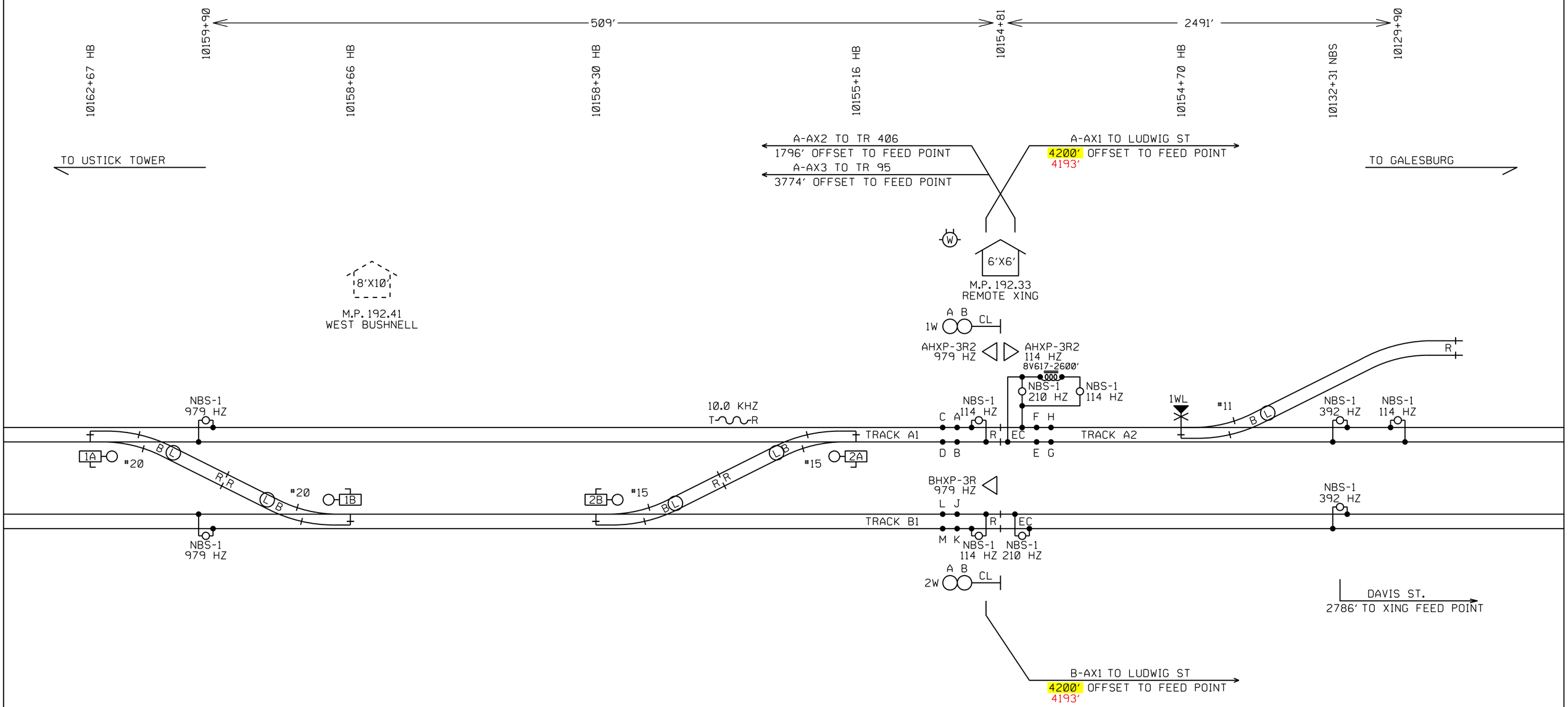

ACTUAL WARNING TIME MAY VARY
+ OR - 5 SECONDS FROM
PRESCRIBED WARNING TIME FOR TRAINS
AT MAXIMUM AUTHORIZED SPEED

NOTES FOR TR 95:

EQUIPMENT IS DESIGNED FOR 20 SECONDS MINIMUM WARNING TIME AT 79 MPH.
APPROACHES WERE LENGTHENED 1 SECOND(S) FOR WIDE OR ANGLED CROSSING (CT).
APPROACHES WERE LENGTHENED 10 SECONDS FOR SPEED VARIANCE AND BALLAST CHANGES (BT).
APPROACHES WERE LENGTHENED 4 SECONDS FOR EQUIPMENT RESPONSE TIME (ERT).

NOTES FOR TR 406:

EQUIPMENT IS DESIGNED FOR 20 SECONDS MINIMUM WARNING TIME AT 79 MPH.
APPROACHES WERE LENGTHENED 3 SECOND(S) FOR WIDE OR ANGLED CROSSING (CT).
APPROACHES WERE LENGTHENED 10 SECONDS FOR SPEED VARIANCE AND BALLAST CHANGES (BT).
APPROACHES WERE LENGTHENED 4 SECONDS FOR EQUIPMENT RESPONSE TIME (ERT).

NOTES FOR LUDWIG ST:

EQUIPMENT IS DESIGNED FOR 20 SECONDS MINIMUM WARNING TIME AT 79 MPH.
APPROACHES WERE LENGTHENED 6 SECOND(S) FOR WIDE OR ANGLED CROSSING (CT).
APPROACHES WERE LENGTHENED 10 SECONDS FOR SPEED VARIANCE AND BALLAST CHANGES (BT).
APPROACHES WERE LENGTHENED 4 SECONDS FOR EQUIPMENT RESPONSE TIME (ERT).

NOTES:

-TEST TERMINAL
-EQUALIZER
-LINE ARRESTER
-HEAVY DUTY ARRESTER
-TWISTED WIRE 2 TURNS PER FOOT

ALL WIRES #16 AWG UNLESS OTHERWISE NOTED

BURLINGTON NORTHERN SANTA FE RAILWAY

CROSSING CIRCUIT PLAN
REMOTE XING BUSHNELL, IL

IN SVC.01-16-14 SEQ#49076 BROOKFIELD SUB PTC SEG 1 DES:TCS/BNSF COR: TCS/ACE						DESIGNED 11-06-15 UPGRADE XING M.P.191.52 XRL/PJV SEQ.# 55643	LS 0011	MP 192.33	SH 01 OF 12

0011192_33x01c_.dgn November 06, 2015

RED = IN YELLOW = OUT

PLAN MUST NOT BE MODIFIED WITHOUT APPROVAL OF SIGNAL ENGINEERING COPYRIGHT 2015 BNSF RAILWAY COMPANY. ALL RIGHTS RESERVED.

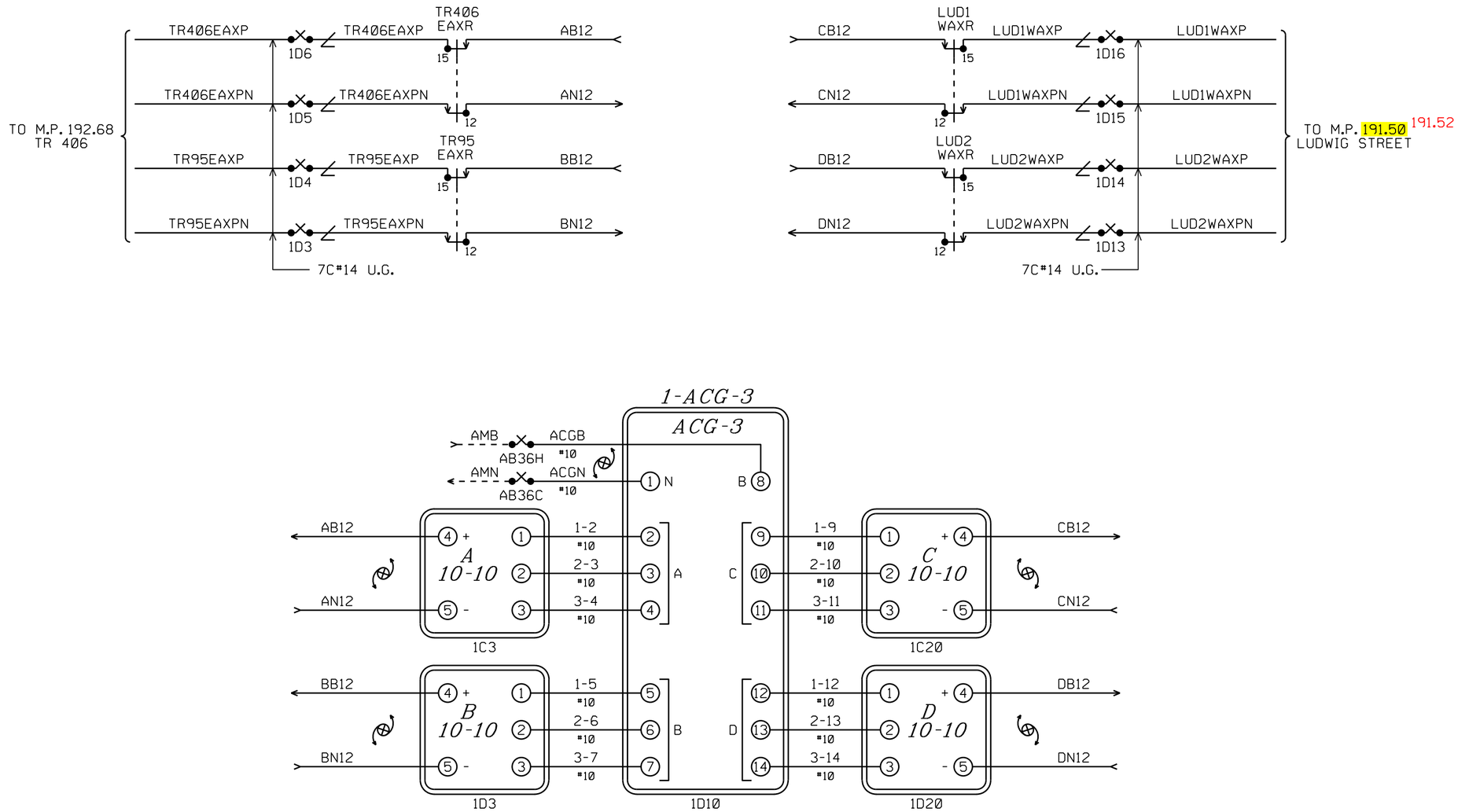

BURLINGTON NORTHERN SANTA FE RAILWAY

DAX CIRCUITS
REMOTE XING BUSHNELL, IL

IN SVC.01-16-14 SEQ#49076
BROOKFIELD SUB PTC SEG 1
DES:TCS/BNSF COR: TCS/ACE

DESIGNED 11-06-15
UPGRADE XING M.P. 191.52
XRL/PJV SEQ.# 55643

LS 0011 | MP 192.33 | SH 02 OF 12

0011192_33x02c_.dgn November 06, 2015

RED = IN YELLOW = OUT

PLAN MUST NOT BE MODIFIED WITHOUT APPROVAL OF SIGNAL ENGINEERING COPYRIGHT 2015 BNSF RAILWAY COMPANY. ALL RIGHTS RESERVED.

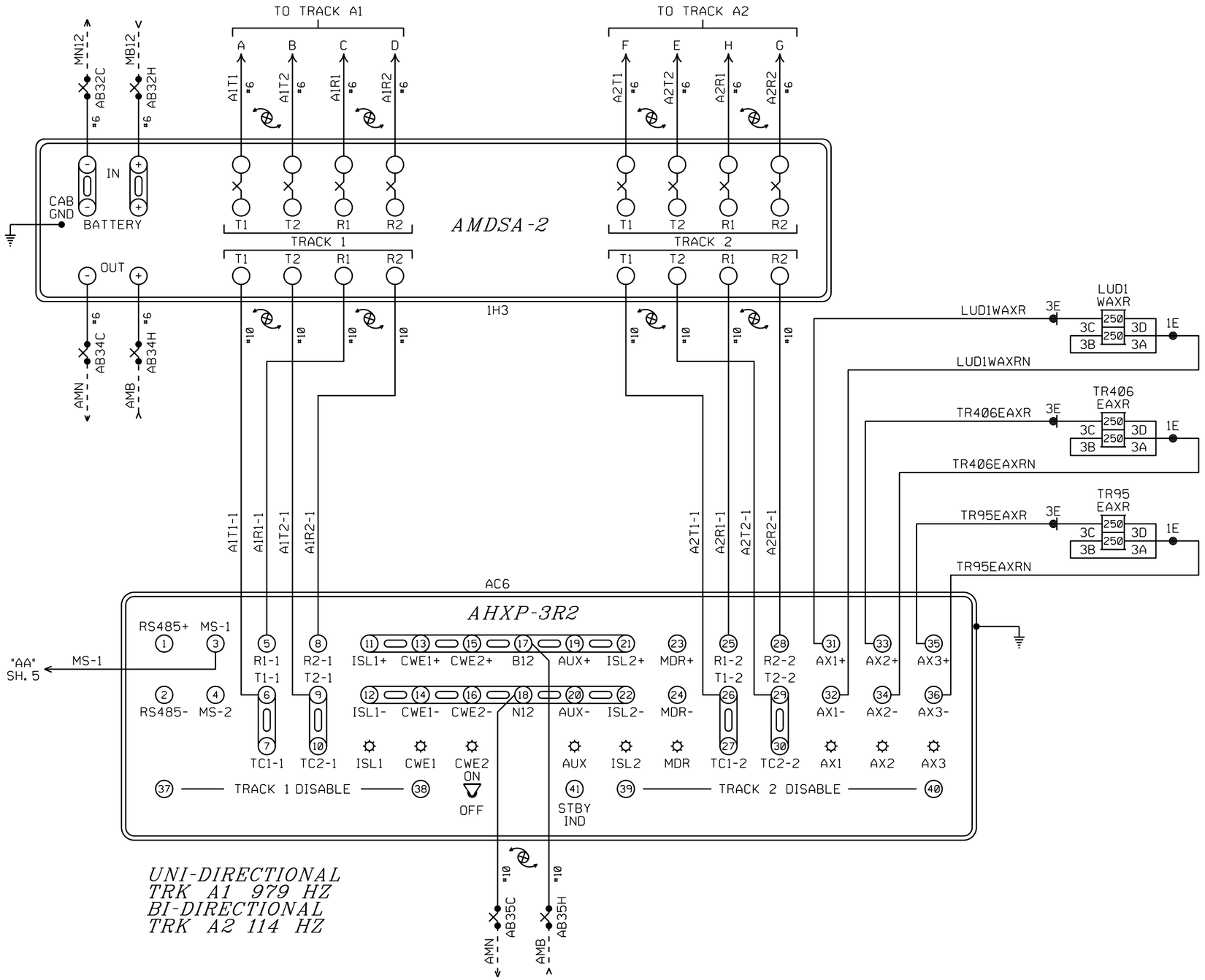

UNI-DIRECTIONAL
TRK A1 979 HZ
BI-DIRECTIONAL
TRK A2 114 HZ

BURLINGTON NORTHERN SANTA FE RAILWAY

AHXP-3R2 TRACK CIRCUITS
REMOTE XING BUSHNELL, IL

IN SVC.01-16-14 SEQ#49076
BROOKFIELD SUB PTC SEG 1
DES:TCS/BNSF COR: TCS/ACE

LS 0011 | MP 192.33 | SH 03 OF 12

0011192_33x03m_.dgn November 06, 2015

PLAN MUST NOT BE MODIFIED WITHOUT APPROVAL OF SIGNAL ENGINEERING COPYRIGHT 2015 BNSF RAILWAY COMPANY. ALL RIGHTS RESERVED.

PROGRAM INFORMATION

PROGRAM VERSION 42.0 OR LATER

*=FIELD ADJUSTMENT TO BE MADE ACCORDING TO THE HXP-3 INSTRUCTION MANUAL 100052-001 AD0 & SUPPLEMENTS.

HXP-3R2 ADJUST SELECT ADJUSTMENTS

NO.	ADJUSTMENT NAME	TRACK 1	TRACK 2
1	APPROACH LENGTH	509'	2491'
2	WARNING TIME	99 SEC.	99 SEC.
3	LIA	*	*
4	TC	*	*
5	MD RESTART	*	*

NOTE:

BEFORE PROGRAMMING ANY PARAMETERS/OPTIONS FOR THE HXP GO TO 'OPTION 49' AND RESET ALL LOCAL PARAMETERS TO FACTORY DEFAULT VALUES. SEE HXP-3 MANUAL 100052-001 AD0 PAGE 4-14.

OPTION ADJUSTMENTS

NO.	ABBREVIATION	TRACK 1	TRACK 2
1	TK-ENA	"UP"	"UP"
2	TK FO	979 HZ	114 HZ
3	CW/MD	"C"	"C"
4	UNI-BI	"u" (UNI)	"b" (BI)
5	NBS-C	* RX	* RX
		* FEET	* FEET
6	CWEWT	DL (80 SEC.)	DL (80 SEC.)
7	LOS	DL (16 SEC.)	DL (16 SEC.)
8	IJ-LOS	DL (5 SEC.)	DL (5 SEC.)
9	BC	*	*
10	P-COMP	*	*
11	AX1	SEE AX ADJ.	SEE AX ADJ.
12	AX2	SEE AX ADJ.	SEE AX ADJ.
13	AX3	SEE AX ADJ.	SEE AX ADJ.
17	MDR-AX/OF-TK	0'	0'
	CJ-LOS	DL (0)	DL (0)
	PJ-DET	DL (15 SEC.)	DL (15 SEC.)
	PJ-RX	DL (15)	DL (15)
18	MD-TMR	DL (10 MIN.)	DL (10 MIN.)
19	MIN-WT	DL (0)	DL (0)
20	FS-RX	DL (0)	DL (0)
	FS-TM	DL (10 MIN.)	DL (10 MIN.)
21	POS-RX	DL (0)	DL (0)
	POS-TM	DL (0)	DL (0)
22	AR-RX	DL (0)	DL (0)
	AR-TM	DL (10 MIN.)	DL (10 MIN.)
47	ATO-RX	UP	UP
48	PF-ENA	"dn"	"dn"

AX ADJUSTMENTS

NO.	ABBREVIATION	AX 1	AX 2	AX 3
1	TK-ASN	1	2	2
2	OF-TK1	4193' 4200'	NA	NA
3	OF-TK2	NA	1796'	3774'
4	WT	36 SEC.	33 SEC.	31 SEC.
5	MD-RST	(0)	(0)	(0)
6	CW/MD	"C"	"C"	"C"
7	CJ-LOS	DL (0)	DL (0)	DL (0)
8	PJ-DET	DL (15 SEC.)	DL (15 SEC.)	DL (15 SEC.)
9	PJ-RX	DL (15)	DL (15)	DL (15)
10	POS-ST	"dn"	"dn"	"dn"

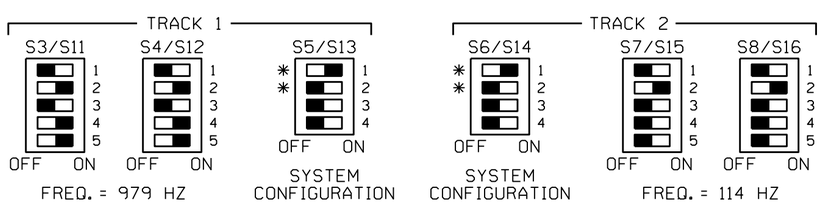

NOTES: FOR S5/S13 AND S6/S14

*1.) ACTUATOR 1 SELECTS NORMAL APPROACH WHEN SET TO ON POSITION.

*2.) WITH ACTUATOR 1 IN OFF POSITION ACTUATOR 2 SELECTS SHORT APPROACH WHEN OFF AND SELECTS VERY SHORT WHEN ON.

3.) ACTUATOR 3 OFF SELECTS HXP OPERATION.

4.) ACTUATOR 4 OFF = NORMAL MUX TABLE
ACTUATOR 4 ON = ALTERNATE MUX TABLE

SWITCH INFORMATION

SWITCH	TRACK 1	TRACK 2
MASTER/SLAVE	MASTER	MASTER
RSI FAULT JUMPER	NA	NA
RSI-LOS JUMPER	NA	NA
TLM W1 JUMPER	PINS 1-2	
TLM W2 JUMPER	PINS 2-3	
TLM W3 JUMPER	PINS 2-3	
MINUTE TIMEOUT	5 MIN	
CW/MD	CW	
STANDBY/AUTO/NORMAL	AUTO	

NOTES: DL= DEFAULT LEVEL
NA= NON APPLICABLE

BURLINGTON NORTHERN SANTA FE RAILWAY

AHXP-3R2 PROGRAM INFORMATION
REMOTE XING BUSHNELL, IL

IN SVC 01-16-14 SEQ#49076
BROOKFIELD SUB PTC SEG 1
DES:TCS/BNSF COR: TCS/ACE

DESIGNED 11-06-15
UPGRADE XING M.P 191.52
XRL/PJV SEQ.# 55643

LS 0011 MP 192.33 SH 04 OF 12

0011192_33x04c_.dgn November 06, 2015

RED = IN YELLOW = OUT

PLAN MUST NOT BE MODIFIED WITHOUT APPROVAL OF SIGNAL ENGINEERING COPYRIGHT 2015 BNSF RAILWAY COMPANY. ALL RIGHTS RESERVED.

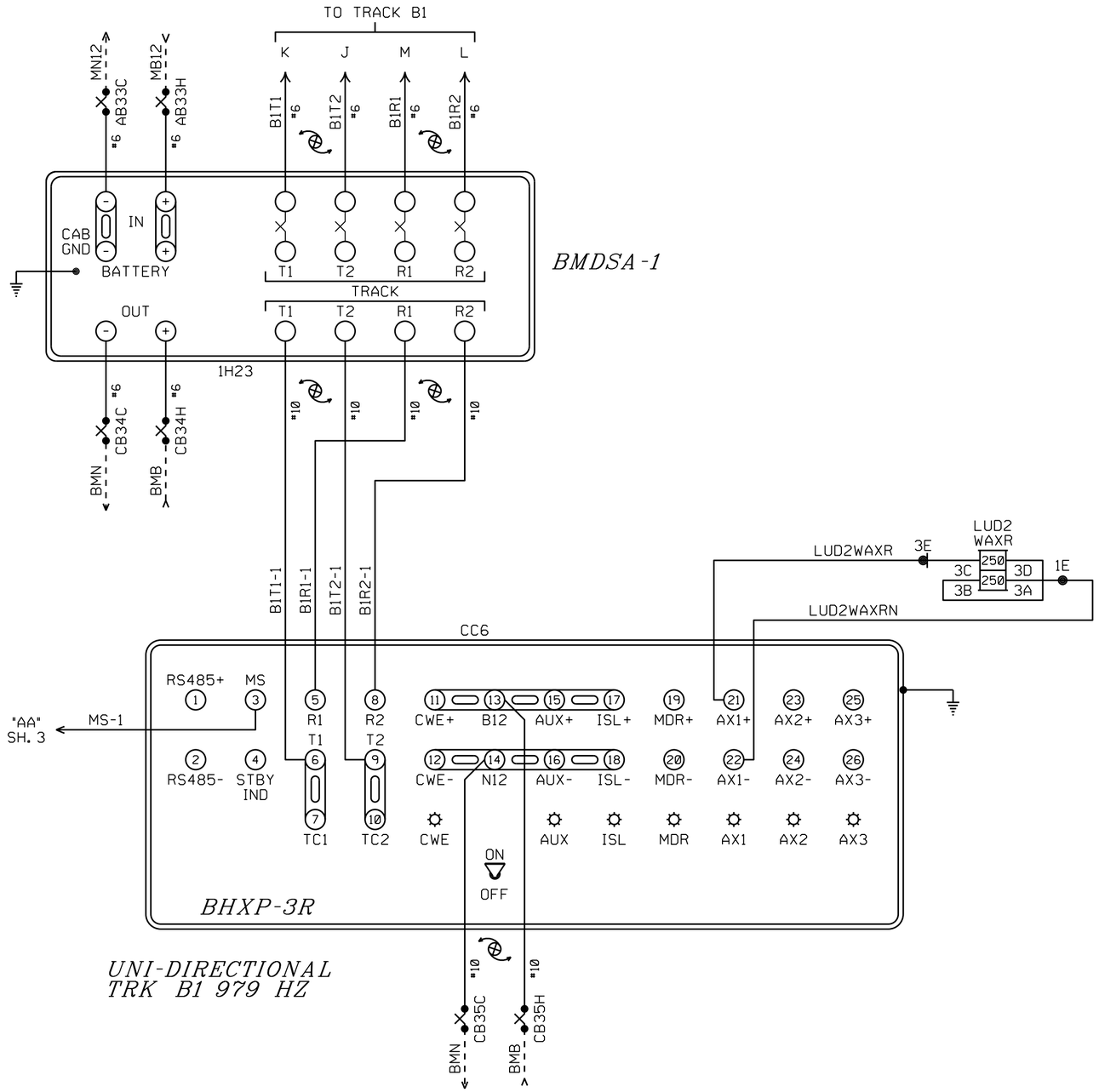

BURLINGTON NORTHERN SANTA FE RAILWAY		
BHXP-3R TRACK CIRCUITS REMOTE XING BUSHNELL, IL		
LS 0011	MP 192.33	SH 05 OF 12

IN SVC 01-16-14 SEQ#49076
BROOKFIELD SUB PTC SEG 1
DES:TCS/BNSF COR: TCS/ACE

0011192_33x05m_.dgn November 06, 2015

PLAN MUST NOT BE MODIFIED WITHOUT APPROVAL OF SIGNAL ENGINEERING COPYRIGHT 2015 BNSF RAILWAY COMPANY. ALL RIGHTS RESERVED.

PROGRAM INFORMATION

PROGRAM VERSION 42.0 OR LATER

*=FIELD ADJUSTMENT TO BE MADE ACCORDING TO THE HXP-3 INSTRUCTION MANUAL AND SUPPLEMENTS.

HXP-3R ADJUSTMENTS

NO.	ADJUSTMENT NAME	TRACK 1
1	APP. LENGTH	509'
2	WARNING TIME	99 SEC.
3	LIA	*
4	TC	*
5	MD RESTART	*

OPTION ADJUSTMENTS

NO.	ABBREVIATION	TRACK 1
1	TK-ENA	"UP"
2	TK FO	979 HZ
3	CW/MD	"C"
4	UNI-BI	"u" (UNI)
5	NBS-C	*
6	CWEWT	DL (80 SEC.)
7	LOS	DL (16 SEC.)
8	IJ-LOS	DL (5 SEC.)
9	BC	*
10	P-COMP	*
11	AX1	SEE AX ADJ.
12	AX2	SEE AX ADJ.
13	AX3	SEE AX ADJ.
17	MDR-AX/OF-TK 1	DL (0)
	CJ-LOS	DL (0)
	PJ-DET	DL (15 SEC.)
	PJ-RX	DL (15)
18	MD-TMR	DL (10 MIN.)
19	MIN-WT	DL (0)
20	FS-RX	DL (0)
	FS-TM	DL (10 MIN.)
21	POS-RX	DL (0)
	POS-TM	DL (0)
22	AR-RX	DL (0)
	AR-TM	DL (10 MIN.)
47	ATO-RX	UP
48	PF-ENA	"dn"

AX ADJUSTMENTS

NO.	ABBREVIATION	AX 1	AX 2	AX 3
1	TK-ASN	1	1,2	1,2
2	OF-TK1	4193' 4200'	NA	NA
3	OF-TK2	NA	NA	NA
4	WT	36 SEC.	99 SEC.	99 SEC.
5	MD-RST	(0)	(0)	(0)
6	CW/MD	CW	CW	CW
7	CJ-LOS	DL (0)	DL (0)	DL (0)
8	PJ-DET	DL (15 SEC.)	DL (15 SEC.)	DL (15 SEC.)
9	PJ-RX	DL (15)	DL (15)	DL (15)
10	POS-ST	"dn"	"dn"	"dn"

SWITCH INFORMATION

SWITCH	TRACK 1
MASTER/SLAVE	SLAVE
RSI FAULT JUMPER	NA
RSI-LOS JUMPER	NA
TLM W1 JUMPER	PINS 1-2
TLM W2 JUMPER	PINS 2-3
TLM W3 JUMPER	PINS 2-3
MINUTE TIMEOUT	5 MIN
CW/MD	CW
STANDBY/AUTO/NORMAL	AUTO

NOTE: DL= DEFAULT LEVEL
NA= NON APPLICABLE

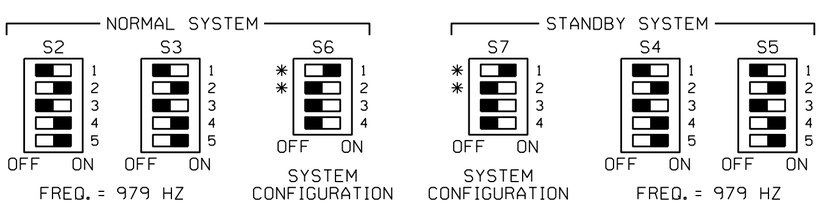

NOTES: FOR S6 AND S7

* 1.) ACTUATOR 1 SELECTS NORMAL APPROACH WHEN SET TO ON POSITION.

* 2.) WITH ACTUATOR 1 IN OFF POSITION ACTUATOR 2 SELECTS SHORT APPROACH WHEN OFF AND SELECTS VERY SHORT WHEN ON.

3.) ACTUATOR 3 OFF SELECTS HXP OPERATION.

4.) ACTUATOR 4 RESERVED FOR FUTURE USE.

BURLINGTON NORTHERN SANTA FE RAILWAY

BHXP-3R PROGRAM INFORMATION
REMOTE XING BUSHNELL, IL

IN SVC 01-16-14 SEQ#49076
BROOKFIELD SUB PTC SEG 1
DES:TCS/BNSF COR: TCS/ACE

DESIGNED 11-06-15
UPGRADE XING M.P. 191.52
XRL/PJV SEQ.# 55643

LS 0011 MP 192.33 SH 06 OF 12

0011192_33x06c_.dgn November 06, 2015

RED = IN YELLOW = OUT

PLAN MUST NOT BE MODIFIED WITHOUT APPROVAL OF SIGNAL ENGINEERING COPYRIGHT 2015 BNSF RAILWAY COMPANY. ALL RIGHTS RESERVED.

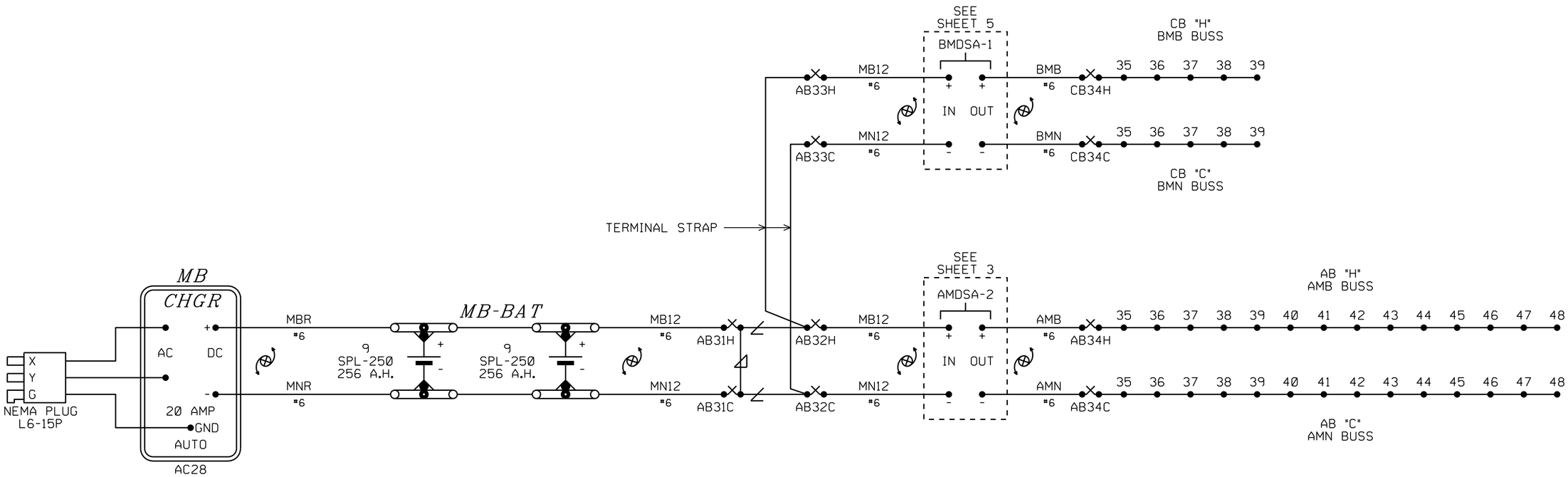

BURLINGTON NORTHERN SANTA FE RAILWAY

BATTERY CIRCUITS
REMOTE XING BUSHNELL, IL

IN SVC.01-16-14 SEQ#49076
BROOKFIELD SUB PTC SEG 1
DES:TCS/BNSF COR: TCS/ACE

LS 0011 MP 192.33 SH 07 OF 12

0011192_33x07m_.dgn November 06, 2015

PLAN MUST NOT BE MODIFIED WITHOUT APPROVAL OF SIGNAL ENGINEERING COPYRIGHT 2015 BNSF RAILWAY COMPANY. ALL RIGHTS RESERVED.

SIDE D

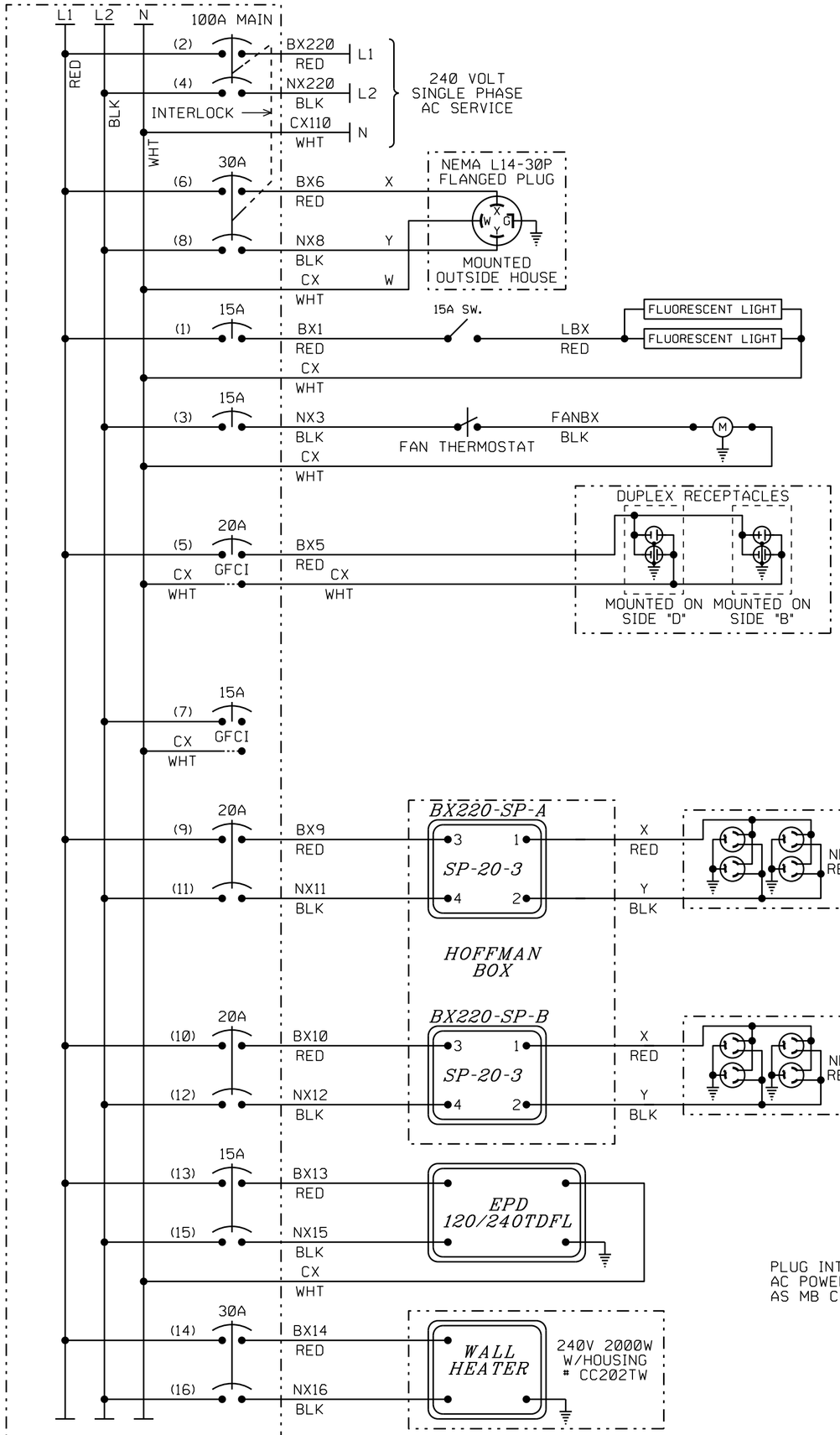

SQUARE D PART NUMBERS
BREAKER BOX: QO116L125G
SURFACE KIT: QOC24US
GROUND KIT: PK12GTA
INTERLOCK: QO2DT1

NOTES:

1. USE THE FOLLOWING COLOR CODE:
   GRN - GREEN - SAFETY EQUIPMENT GROUND
   WHT - WHITE - CX110 (NEUTRAL)
   BLK - BLACK - NX220 (L2)
   RED - RED - BX220 (L1)
   EXCEPTIONS TO THE ABOVE COLOR CODE ARE THE PRE-WIRED, SEALED ARRESTOR UNITS MOUNTED ON THE BREAKER BOX WHICH HAVE TWO BLACK AND ONE WHITE WIRE EACH.
2. ▶ = WIRE NUT
3. MINIMUM WIRE SIZE
   10 AMP - NO.14 AWG THHN OR THWN SOLID
   20 AMP - NO.12 AWG THHN OR THWN SOLID
   30 AMP - NO.10 AWG THHN OR THWN SOLID
4. GROUND FAULT INTERRUPT (GFCI) MUST BE USED ON ALL CIRCUITS SERVING CONVENIENCE OUTLETS AND ANY EQUIPMENT OUTSIDE THE BUNGALOW. RECEPTACLE MOUNTED GFCI MAY BE USED INSTEAD OF BREAKER TYPE.
5. ISOLATION TRANSFORMER IF INSTALLED.
   OLD: JUMPER WIRES BLK/YEL TO BLK/GRN WITH CX (WHT)
   JUMPER WIRES BLK TO BLK/RED WITH NX7 (BLK)
   NEW: JUMPER WIRES YEL TO BRN WITH CX (WHT)
   JUMPER WIRES BLK TO BLU WITH NX7 (BLK)
6. ALL GROUND WIRES RUN TO BREAKER BOX GROUND BUSS

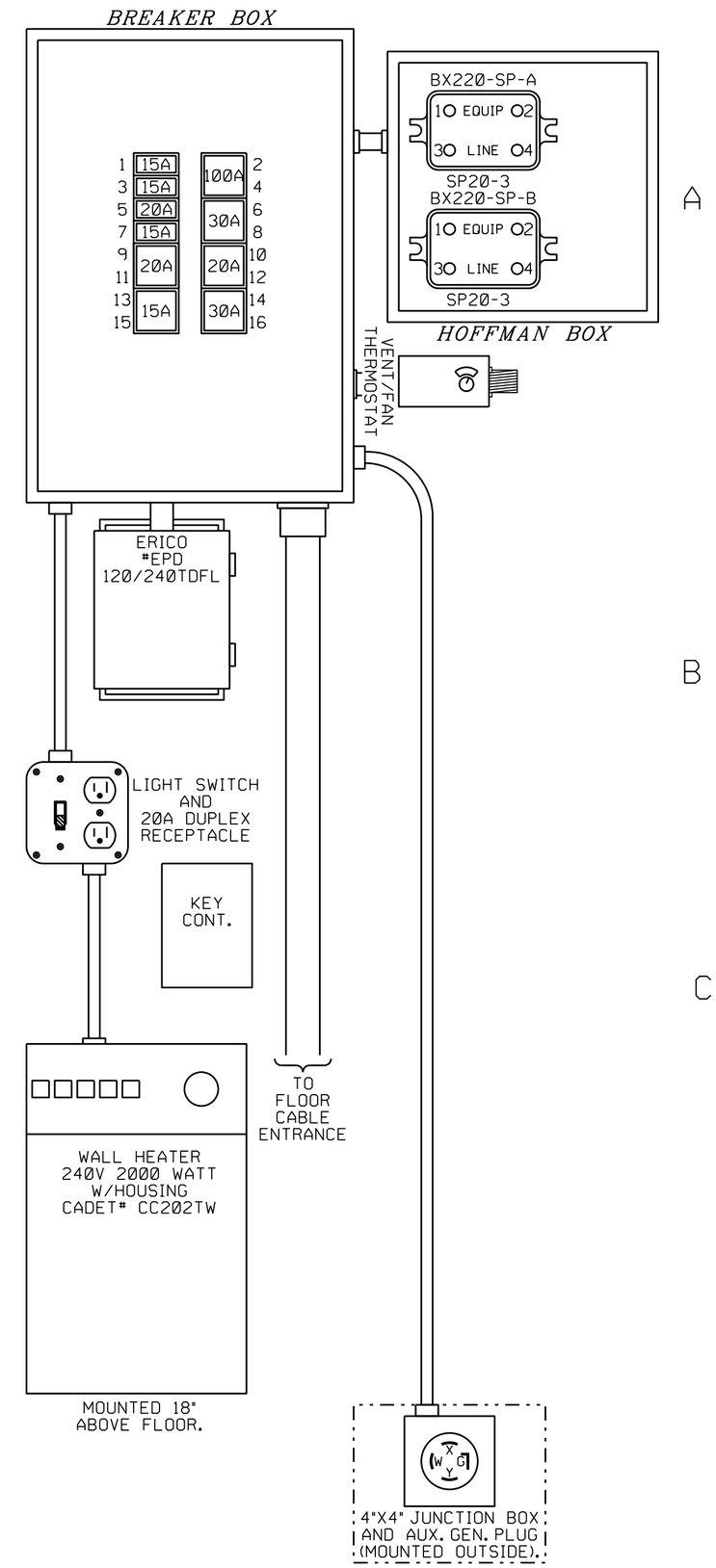

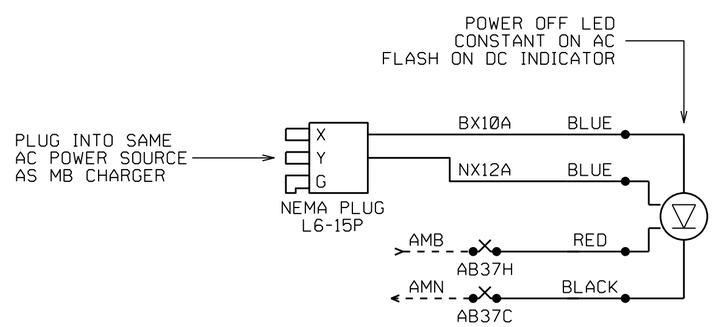

A

B

C

BURLINGTON NORTHERN SANTA FE RAILWAY

POWER DISTRIBUTION
REMOTE XING BUSHNELL, IL

IN SVC.01-16-14 SEQ#49076 BROOKFIELD SUB PTC SEG 1 DES:TCS/BNSF COR: TCS/ACE							LS 0011	MP 192.33	SH 08 OF 12

0011192_33x08m_.dgn November 06, 2015

PLAN MUST NOT BE MODIFIED WITHOUT APPROVAL OF SIGNAL ENGINEERING COPYRIGHT 2015 BNSF RAILWAY COMPANY. ALL RIGHTS RESERVED.

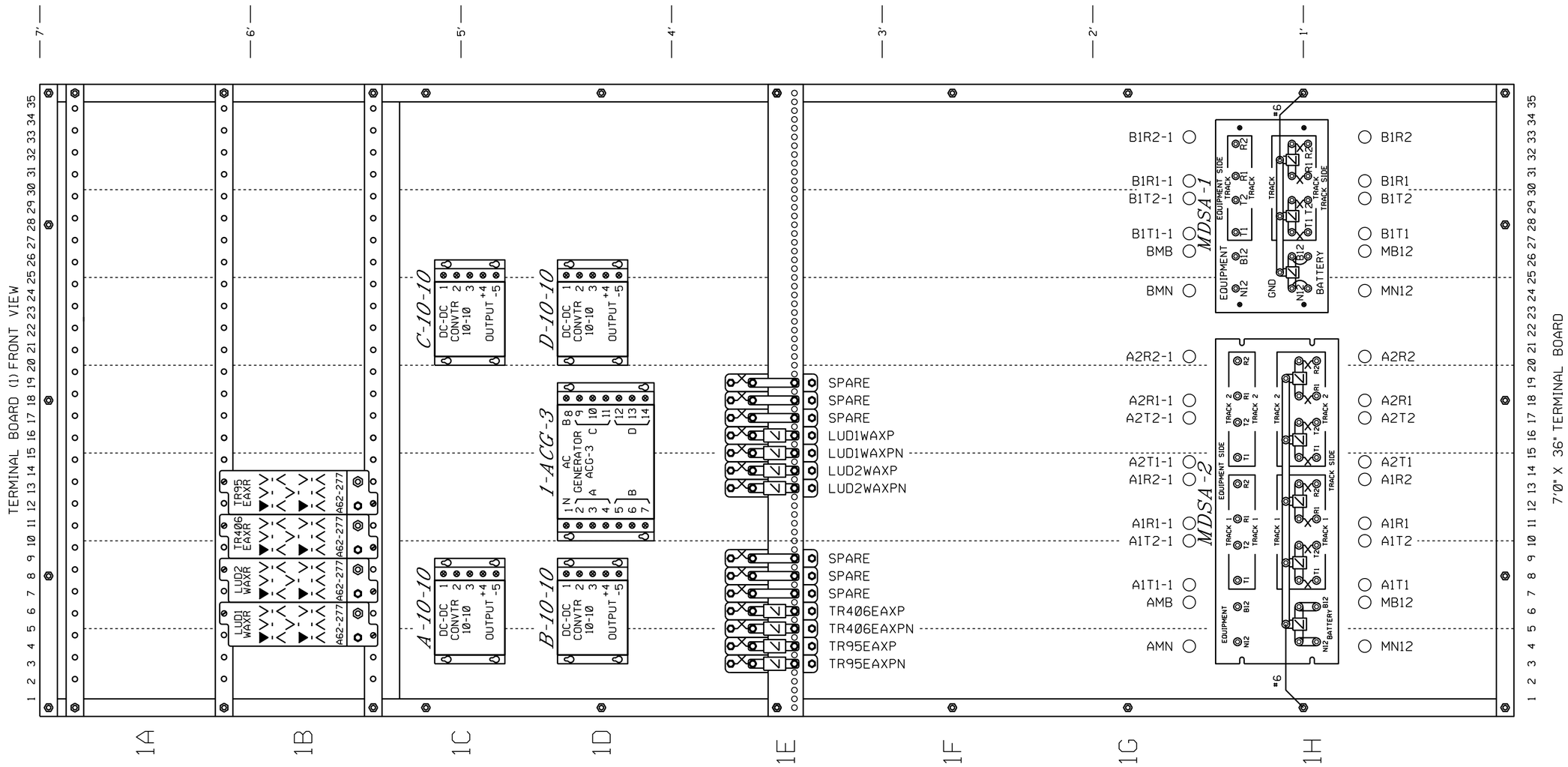

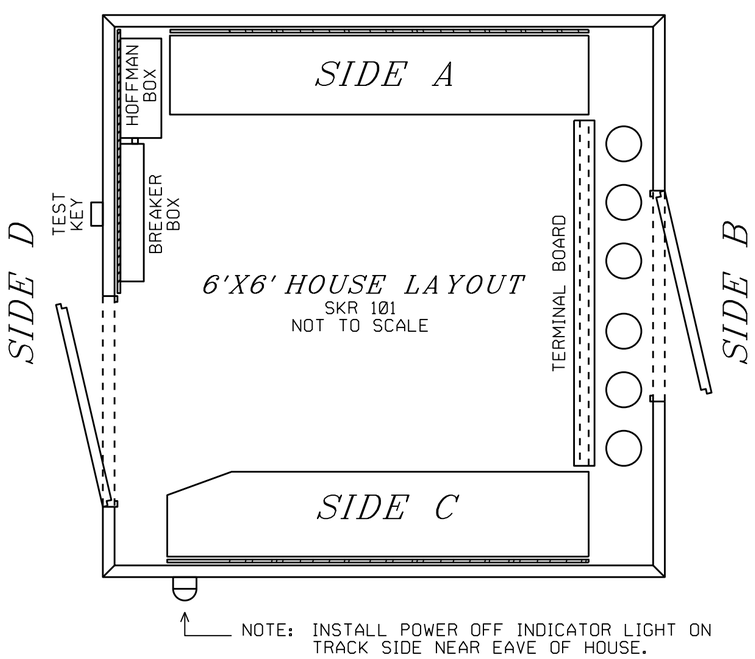

NOTE: INSTALL POWER OFF INDICATOR LIGHT ON TRACK SIDE NEAR EAVE OF HOUSE.

RELAY CROSS REFERENCE

GRS	SAFETRAN
A62-277	400004

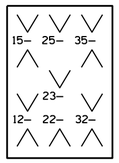

A62-277

▼ = CONTACT USED

∨ = CONTACT NOT USED

BURLINGTON NORTHERN SANTA FE RAILWAY

SIDE "B" TERMINAL BOARD LAYOUT
REMOTE XING BUSHNELL, IL

IN SVC 01-16-14 SEQ#49076
BROOKFIELD SUB PTC SEG 1
DES:TCS/BNSF COR: TCS/ACE

LS 0011 | MP 192.33 | SH 09 OF 12

0011192_33x09m_.dgn November 06, 2015

PLAN MUST NOT BE MODIFIED WITHOUT APPROVAL OF SIGNAL ENGINEERING COPYRIGHT 2015 BNSF RAILWAY COMPANY. ALL RIGHTS RESERVED.

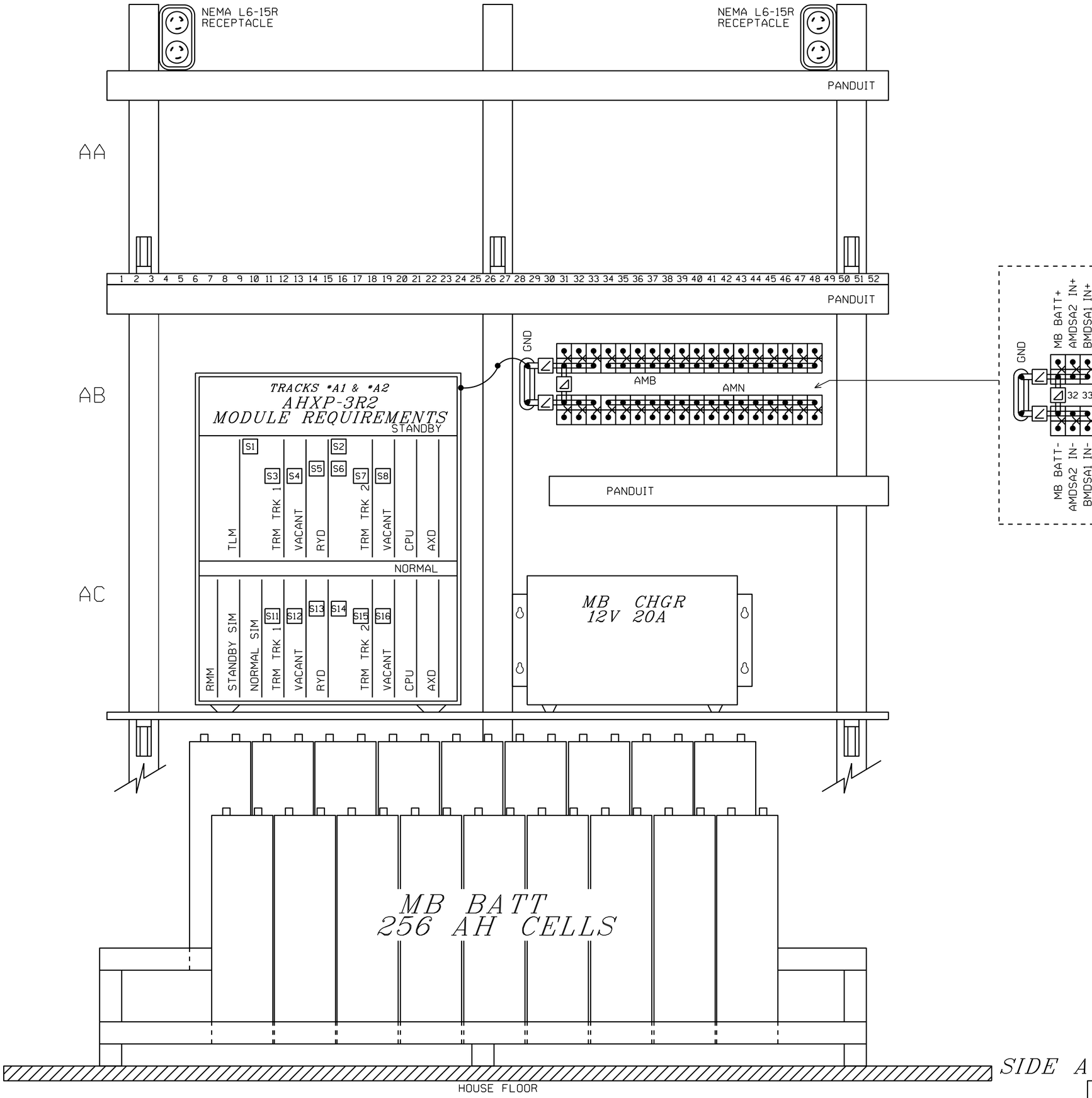

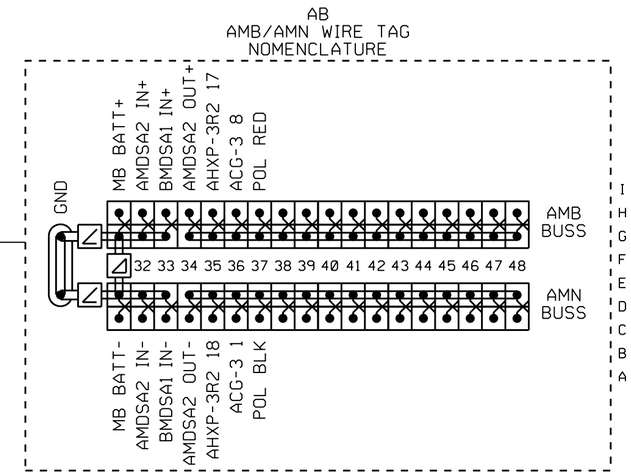

BURLINGTON NORTHERN SANTA FE RAILWAY

SIDE "A" SHELF LAYOUT
REMOTE XING BUSHNELL, IL

IN SVC.01-16-14 SEQ#49076
BROOKFIELD SUB PTC SEG 1
DES:TCS/BNSF COR: TCS/ACE

LS 0011 | MP 192.33 | SH 10 OF 12

0011192_33x10m_.dgn November 06, 2015

PLAN MUST NOT BE MODIFIED WITHOUT APPROVAL OF SIGNAL ENGINEERING COPYRIGHT 2015 BNSF RAILWAY COMPANY. ALL RIGHTS RESERVED.

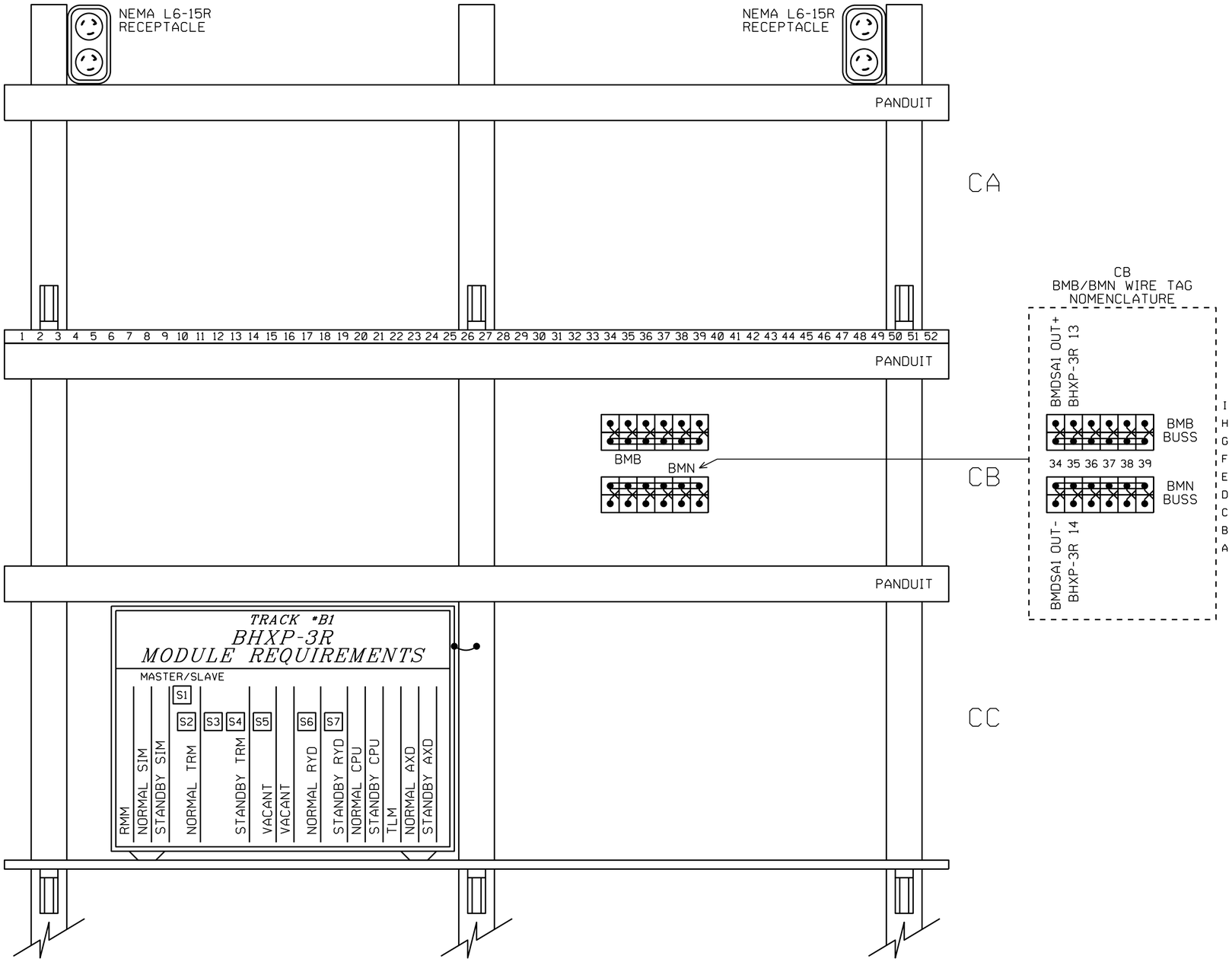

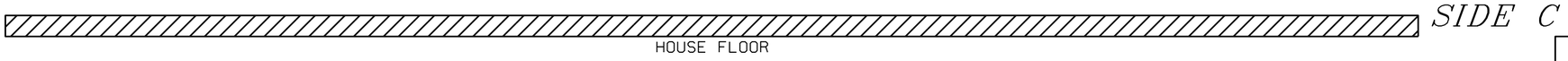

BURLINGTON NORTHERN SANTA FE RAILWAY

SIDE "C" SHELF LAYOUT
REMOTE XING BUSHNELL, IL

IN SVC 01-16-14 SEQ#49076
BROOKFIELD SUB PTC SEG 1
DES:TCS/BNSF COR: TCS/ACE

LS 0011 | MP 192.33 | SH 11 OF 12

0011192_33x11m_.dgn November 06, 2015

PLAN MUST NOT BE MODIFIED WITHOUT APPROVAL OF SIGNAL ENGINEERING COPYRIGHT 2015 BNSF RAILWAY COMPANY. ALL RIGHTS RESERVED.

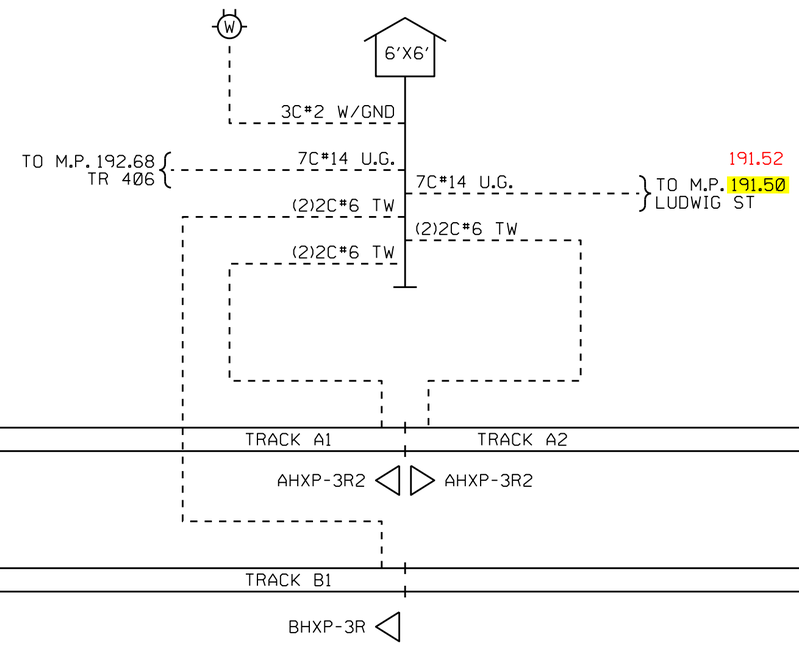

BURLINGTON NORTHERN SANTA FE RAILWAY

CABLE LAYOUT
REMOTE XING BUSHNELL, IL

IN SVC.01-16-14 SEQ#49076
BROOKFIELD SUB PTC SEG 1
DES:TCS/BNSF COR: TCS/ACE

DESIGNED 11-06-15
UPGRADE XING M.P. 191.52
XRL/PJV SEQ.# 55643

LS 0011 MP 192.33 SH 12 OF 12

0011192_33x12c_.dgn November 06, 2015

RED = IN YELLOW = OUT