CROSSING DISABLE PROCEDURE

Street: **Ludwig Street**
City: **Bushnell, IL**
Line Segment: **0011**
Mile Post: **191.52**
DOT#: **072 913 P**
Subdivision: **Brookfield**
Plan Revision Date: **December 15, 2015**

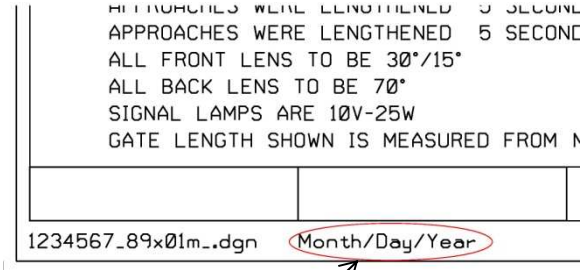

DATES MUST MATCH

Note: If the date stamp on the lower left corner of sheet 1 of the plan set does not match the Plan Revision Date shown above, then this procedure is **VOID**.

SEE EXAMPLE ABOVE.

Before following the Crossing Disable Procedure, comply with Signal Instruction 7.2, 7.2A, 7.2B, 7.2C as appropriate. An understanding of the highway/railroad crossing circuits is required before any work is performed.

IF YOU ARE UNSURE OF ANY OF THESE PROCEDURES, CONSULT YOUR SUPERVISOR.

Disable one approach on either track but not the islands (from Signal Instruction 7.2):

a. Shunt affected approach outside of the island and as close to track work as practicable.
b. Crossing should recover in approximately 20 seconds.
c. Verify crossing island circuit is effective.
d. Test unaffected tracks and approaches to make sure crossing warning system operates properly.

Note: Shunt placement will adversely affect opposite approach and may also cause short warning time for the adjacent crossing (TR 406, TR 95, Davis Street, Hurst Street, Hail Street, Gridley Street and Osborn Street). Before placing any shunt, verify if the adjacent crossings will be affected and ensure that proper procedures have been followed to protect those crossings.

Copyright 2015 BNSF Railway Company. All rights reserved.

Disable both approaches on either track but not the islands (from Signal Instruction 7.2):

a. Shunt both approaches as close to track work as practicable.
b. Crossing should recover in approximately 20 seconds.
c. Verify crossing island circuit is effective.
d. Test unaffected tracks and approaches to make sure crossing warning system operates properly.

<u>Note:</u> Shunt placement may also cause short warning time for the adjacent crossings (TR 406, TR 95, Davis Street, Hurst Street, Hail Street, Gridley Street and Osborn Street). Before placing any shunt, verify if the adjacent crossings will be affected and ensure that proper procedures have been followed to protect those crossings.

Disable TP&W track (from Signal Instruction 7.2):

a. Place a jumper across the XT OOS terminals (CA40 to CA43).
b. Test unaffected tracks and approaches to make sure crossing warning system operates properly.

Disable Main Track 1, east of insulated joints at MP 191.50 (from Signal Instruction 7.2):

c. Place a jumper across the 1EX OOS terminals (CA5 to CA8).
d. Test unaffected tracks and approaches to make sure crossing warning system operates properly.

Disable Main Track 1, west of insulated joints at MP 192.33 (from Signal Instruction 7.2):

a. Place a jumper across the 1WX OOS terminals (CA15 to CA18).
b. Test unaffected tracks and approaches to make sure crossing warning system operates properly.

Disable Main Track 2, east of insulated joints at MP 191.50 (from Signal Instruction 7.2):

a. Place a jumper across the 2EX OOS terminals (CA10 to CA13).
b. Test unaffected tracks and approaches to make sure crossing warning system operates properly.

Disable Main Track 2, west of insulated joints at MP 192.33 (from Signal Instruction 7.2):

a. Place a jumper across the 2WX OOS terminals (CA20 to CA23).
b. Test unaffected tracks and approaches to make sure crossing warning system operates properly

Copyright 2015 BNSF Railway Company. All rights reserved.

Disable Main Track 1, entirely, if island is affected (from Signal Instruction 7.2):

a. Place a jumper across the TRK #1 OOS terminals (CA30 to CA33).
b. Test unaffected tracks and approaches to make sure crossing warning system operates properly.

Disable Main Track 2, entirely, if island is affected (from Signal Instruction 7.2):

a. Place a jumper across the TRK #2 OOS terminals (CA35 to CA38).
b. Test unaffected tracks and approaches to make sure crossing warning system operates properly.

Disable entire crossing is islands are affected on all tracks (from Signal Instruction 7.2):

a. Place a jumper from the TRK #1 OOS terminal (CA30) to the XT OOS terminal (CA43).

Note: **You have energized the XR relay and crossing signals are now inoperative.**

WHEN RESTORING SYSTEM, VERIFY THAT ALL SHUNTS AND/OR TEST JUMPERS HAVE BEEN REMOVED AND ACCOUNTED FOR, AND CROSSING WARNING SYSTEM HAS BEEN TESTED FOR PROPER OPERATION.

Copyright 2015 BNSF Railway Company. All rights reserved.

PLAN MUST NOT BE MODIFIED WITHOUT APPROVAL OF SIGNAL ENGINEERING

COPYRIGHT 2015 BNSF RAILWAY COMPANY. ALL RIGHTS RESERVED.

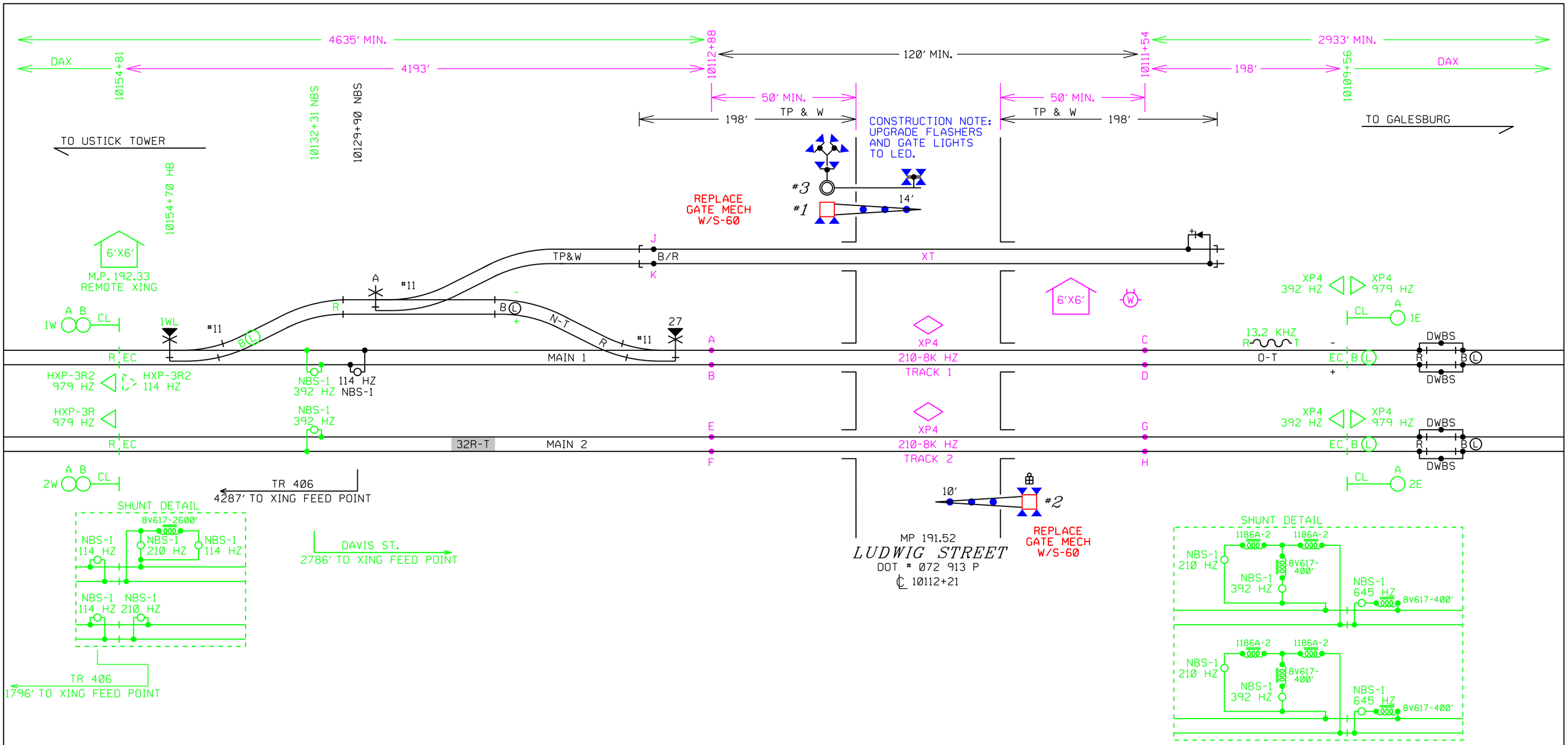

ACTUAL WARNING TIME MAY VARY
+ OR - 5 SECONDS FROM
PRESCRIBED WARNING TIME FOR TRAINS
AT MAXIMUM AUTHORIZED SPEED

NOTES:

TP&W EQUIPMENT IS DESIGNED FOR 20 SECONDS MINIMUM WARNING TIME AT 5 MPH.
EASTBOUND EQUIPMENT IS DESIGNED FOR 20 SECONDS MINIMUM WARNING TIME AT 79 MPH.
WESTBOUND EQUIPMENT IS DESIGNED FOR 20 SECONDS MINIMUM WARNING TIME AT 50 MPH.
APPROACHES WERE LENGTHENED 6 SECOND(S) FOR WIDE OR ANGLED CROSSING (CT).
APPROACHES WERE LENGTHENED 10 SECONDS FOR SPEED VARIANCE AND BALLAST CHANGES (BT).
APPROACHES WERE LENGTHENED 4 SECONDS FOR EQUIPMENT RESPONSE TIME (ERT).
GATE LENGTH SHOWN IS MEASURED FROM MAST C/L TO GATE TIP.
ALL LAMPS TO BE LED

FOUNDATION PLACEMENT SKETCH
ON SHEET 2

NOTES:

-TEST TERMINAL
-EQUALIZER
-LINE ARRESTER
-HEAVY DUTY ARRESTER
-TWISTED WIRE 2 TURNS PER FOOT
-CONNECTION TO REC./RTU

ALL WIRES #16 AWG UNLESS OTHERWISE NOTED

BURLINGTON NORTHERN SANTA FE RAILWAY

CROSSING CIRCUIT PLAN
LUDWIG STREET BUSHNELL, IL

IN SVC.04-02-07 SEQ#36044 REDRAWN FROM ACAD DES: TCS/ COR: TCS/	IN SVC.05-16-07 SEQ#34689 INSTALL HXP AT MP192.68 DES: TCS/RRD COR: TCS/ACE	IN SVC. 10-15-09 SEQ#42498 CREATE XING DISABLE PLAN DES: / COR: CTC/DWR	REVISED 03-01-13 DESIGNED 04-01-12 BROOKFIELD SUB PTC P4 TCS/BNSF SEQ.# 49076	DESIGNED 04-12-07 UPGRADE TO LED MP 191.5 TCS/BES SEQ.# 36044	DESIGNED 07-03-13 GATE MECH REPLACEMENT RSD/BES SEQ.# 52309	DESIGNED 11-06-15 UPGRADE XING M.P. 191.52 XRL/PJV SEQ.# 55643	LS 0011	MP 191.52	SH 01 OF 15

0011191_52x01c_.dgn December 15, 2015

GREEN = IN GREY = OUT BLUE = IN BROWN = OUT RED = IN YELLOW = OUT PURPLE=IN TEAL=OUT

PLAN MUST NOT BE MODIFIED WITHOUT APPROVAL OF SIGNAL ENGINEERING COPYRIGHT 2015 BNSF RAILWAY COMPANY. ALL RIGHTS RESERVED.

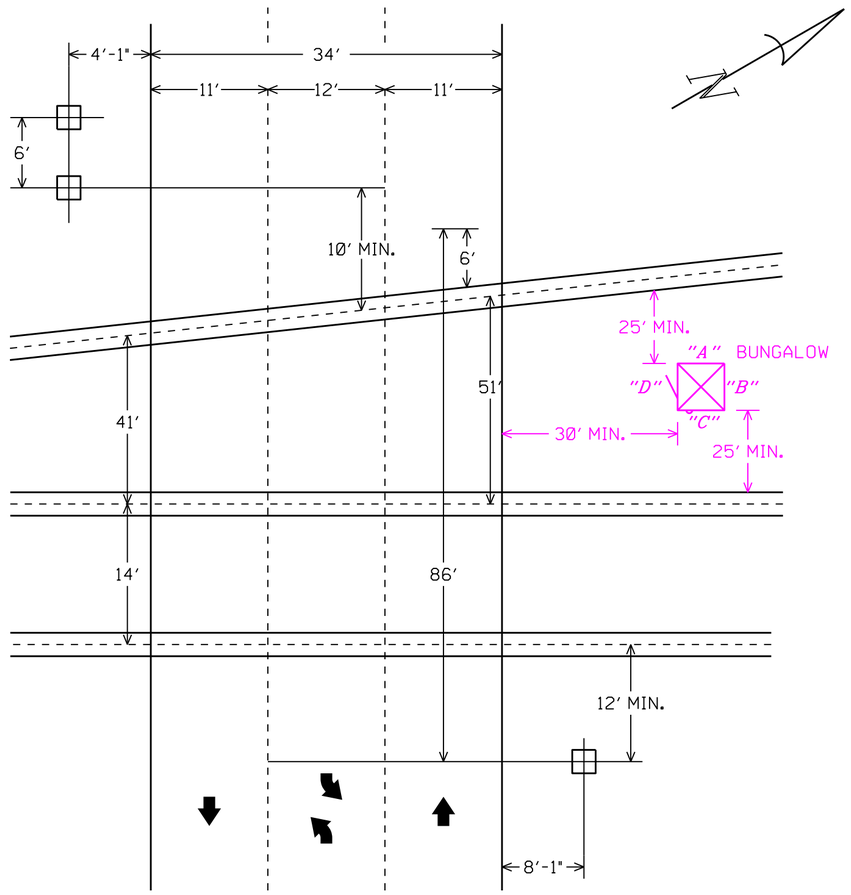

FOUNDATION PLACEMENT SKETCH
NOT TO SCALE

BURLINGTON NORTHERN SANTA FE RAILWAY

FOUNDATION SKETCH
LUDWIG STREET BUSHNELL, IL

DESIGNED 11-06-15
UPGRADE XING M.P. 191.52
XRL/PJV SED.# 55643

LS 0011 | MP 191.52 | SH 02 OF 15

PURPLE=IN TEAL=OUT

PLAN MUST NOT BE MODIFIED WITHOUT APPROVAL OF SIGNAL ENGINEERING COPYRIGHT 2015 BNSF RAILWAY COMPANY. ALL RIGHTS RESERVED.

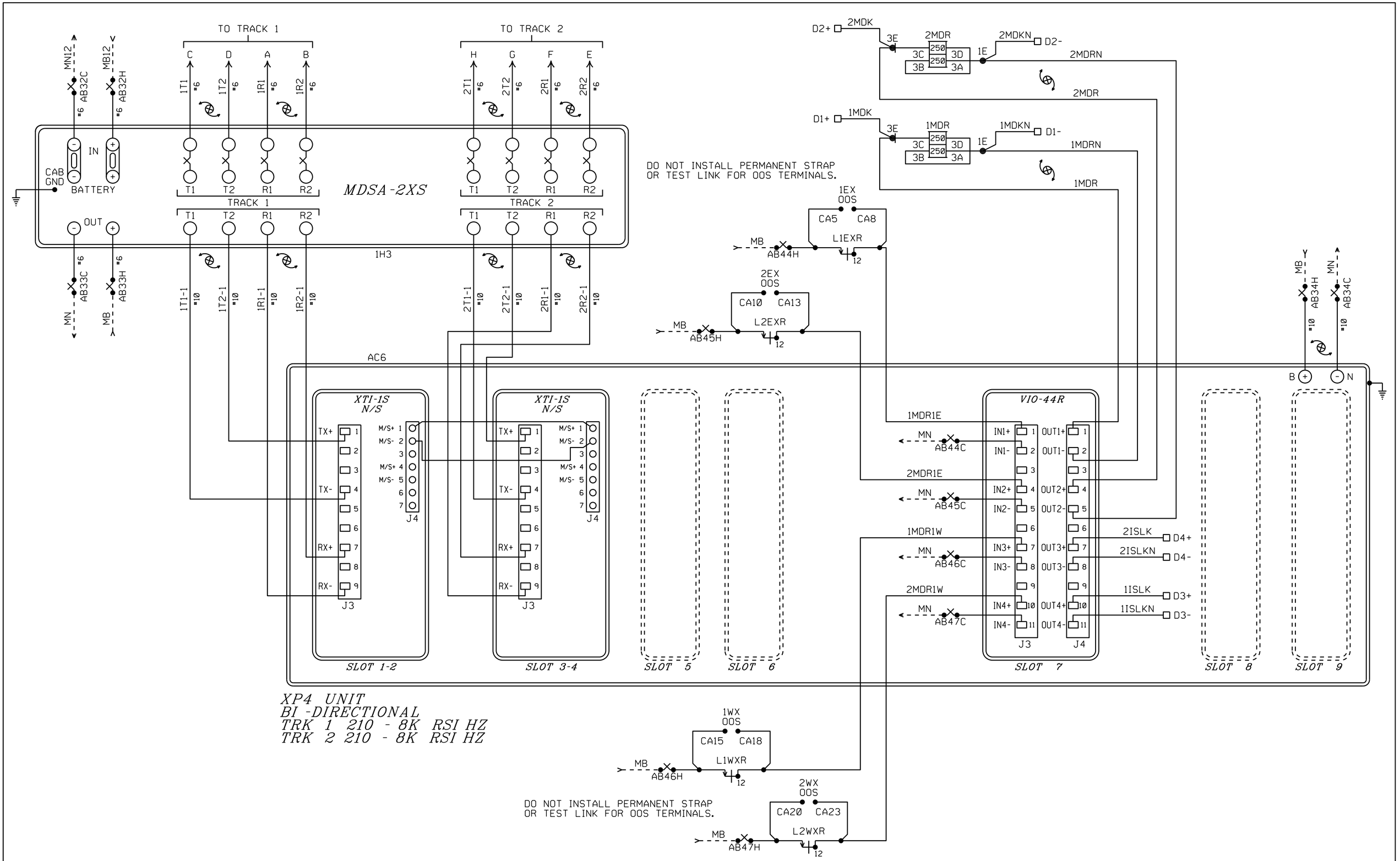

BURLINGTON NORTHERN SANTA FE RAILWAY		
XP4 TRACK CIRCUITS LUDWIG STREET BUSHNELL, IL		
LS 0011	MP 191.52	SH 03 OF 15

DESIGNED 11-06-15
UPGRADE XING M.P. 191.52
XRL/PJV SED.# 55643

PLAN MUST NOT BE MODIFIED WITHOUT APPROVAL OF SIGNAL ENGINEERING COPYRIGHT 2015 BNSF RAILWAY COMPANY. ALL RIGHTS RESERVED.

APPLICATION SOFTWARE INFO

TYPE	REDUNDANT
NAME	2t_c5_1₁
CONFIGURATION	5
CHECKSUM	F4F6
CRC	4E61

CHASSIS ID

DIP NO.	1	2	3	4	5	6	7	8
SHUNT	X	X	X	X	X	I	X	X
CHASSIS ID DECIMAL	4							

NOTE: I = TAB INTACT
X = TAB PUNCHED OUT

VITAL I/O

SLOT 7 INPUTS

INPUT #	NAME	FUNCTION
INPUT 1	S7_IN1_AUX1	AUX/CWE For MDR1
INPUT 2	S7_IN2_AUX2	AUX/CWE For MDR2
INPUT 3	S7_IN3_AUX1	AUX/CWE For MDR1
INPUT 4	S7_IN4_AUX2	AUX/CWE For MDR2

SLOT 7 OUTPUTS

OUTPUT #	NAME	FUNCTION
OUTPUT 1	S7_OUT1_MDR1	RELAY OUTPUT-MDR1
OUTPUT 2	S7_OUT2_MDR2	RELAY OUTPUT-MDR2
OUTPUT 3	S7_OUT3_ISL2	RELAY OUTPUT-ISL2
OUTPUT 4	S7_OUT4_ISL1	RELAY OUTPUT-ISL1

PROGRAM VERSION 7.10 OR LATER

*=FIELD ADJUSTMENT TO BE MADE ACCORDING TO THE XP4 INSTRUCTION MANUAL 100323-010 AH0 & SUPPLEMENTS.

BASIC TRACK SETUP

ADJUSTMENT NAME	TRACK 1	TRACK 2
ISLAND ASSIGNMENT	ISL1_ASSIGN	ISL2_ASSIGN
APPROACH FREQUENCY (HZ)	210 HZ	210 HZ
APPROACH LENGTH (FEET)	4191'	4191'
MASTER/SLAVE	MASTER	SLAVE
UNI/BI	BI	BI
RX ADJUST	100	100
TCA (TRANSMITTER CHECK)	*	*
LIA (LUMPED IMPEDANCE)	*	*
ADVANCED APR. CAL	INACTIVE	INACTIVE
NBS COMP RX	*	*
AUTO RX	ENABLE	ENABLE
MD TIMER ENABLE	DISABLE	DISABLE
MD TIMER DELAY (MIN.)	10	10
LOS TIME (SEC.)	16 SEC.	16 SEC.
IJ-LOS TIME (SEC.)	5 SEC.	5 SEC.
FALSE SHUNT ENABLE	DISABLE	DISABLE
FALSE SHUNT RX	0	0
FALSE SHUNT DELAY (MIN.)	10	10
APPROACH RELEASE ENABLE	DISABLE	DISABLE
APPROACH RELEASE RX	0	0
APPROACH RELEASE DELAY (MIN.)	10	10
NRML_SHRT_VRYSHRT	NRML	NRML

ISLAND SETUP

TRACK #	TRACK 1	TRACK 2
FREQUENCY (HZ)	8000 HZ	8000 HZ
ISLAND ENABLE	ENABLE	ENABLE
FAULT DELAY	1	1
LOS COUNT (SEC.)	2.0	2.0

MAINTENANCE MENU

TRACK #	TRACK 1	TRACK 2
ENABLE/DISABLE	ENABLE	ENABLE
DISABLE TIMEOUT	*	*
BALLAST COMP.	*	*
PHASE COMP.	*	*

NOTE: DL = DEFAULT LEVEL
NA = NON APPLICABLE

MDR SETUP FOR SLOT 7

MDR #	MDR 1		MDR 2	
WARNING TIME (SECS.)	36		36	
CONSTANT WARNING (CW) OR MOTION DETECTOR (MD)	CW		CW	
TRACK ASSIGN	ASSIGNED	UNASSIGNED	UNASSIGNED	ASSIGNED
TRACK OFFSET DISTANCE (FEET)	0	0	0	0
MD RESTART RX	*0	*0	*0	*0
SUDDEN SHUNT ZONE RX	0	0	0	0
POST JOINT	ENABLE	ENABLE	ENABLE	ENABLE
POST JOINT RX	15	15	15	15
POST JOINT DELAY (SECS.)	15	15	15	15
POSITIVE START	DISABLE	DISABLE	DISABLE	DISABLE
POSITIVE START RX	0	0	0	0
POSITIVE START ACTIVE TIME (MIN.)	0	0	0	0
AUX RECOVERY DELAY (SECS.)	6		6	
CWE-WT	80		80	

NOTE:
THESE ARE DEFAULT VALUES. FIELD ASSIGNABLE.

ALL NEW

DESIGNED 11-06-15
UPGRADE XING M.P. 191.52
XRL/PJV SEQ.# 55643

BURLINGTON NORTHERN SANTA FE RAILWAY

XP4 PROGRAM CONFIGURATION
LUDWIG STREET BUSHNELL, IL

LS 0011 MP 191.52 SH 04 OF 15

PLAN MUST NOT BE MODIFIED WITHOUT APPROVAL OF SIGNAL ENGINEERING COPYRIGHT 2015 BNSF RAILWAY COMPANY. ALL RIGHTS RESERVED.

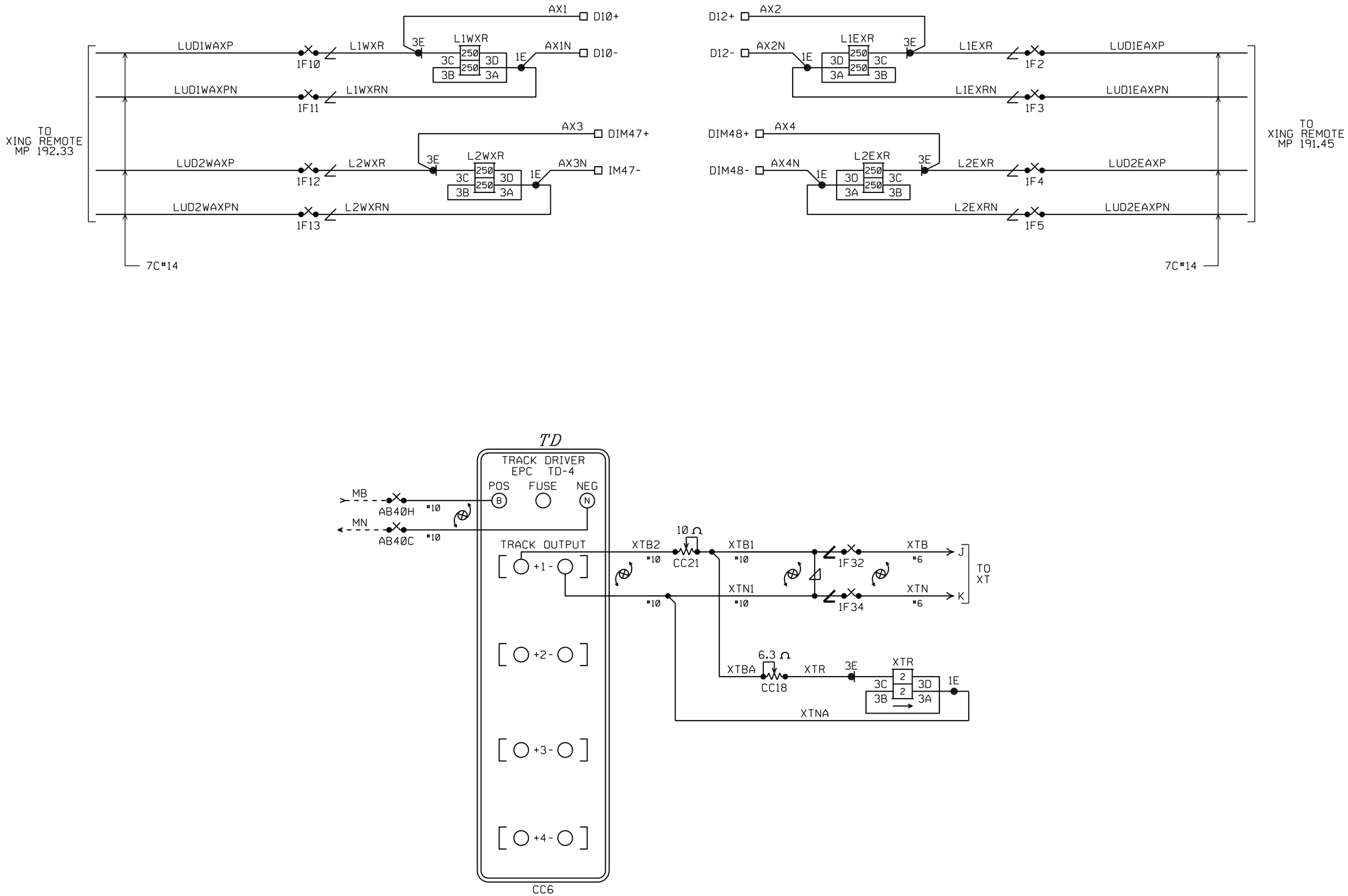

ALL NEW

DESIGNED 11-06-15
UPGRADE XING M.P. 191.52
XRL/PJV SED.# 55643

BURLINGTON NORTHERN SANTA FE RAILWAY		
AX AND AC/DC TRACK CIRCUITS LUDWIG STREET BUSHNELL, IL		
LS 0011	MP 191.52	SH 05 OF 15

PLAN MUST NOT BE MODIFIED WITHOUT APPROVAL OF SIGNAL ENGINEERING

COPYRIGHT 2015 BNSF RAILWAY COMPANY. ALL RIGHTS RESERVED.

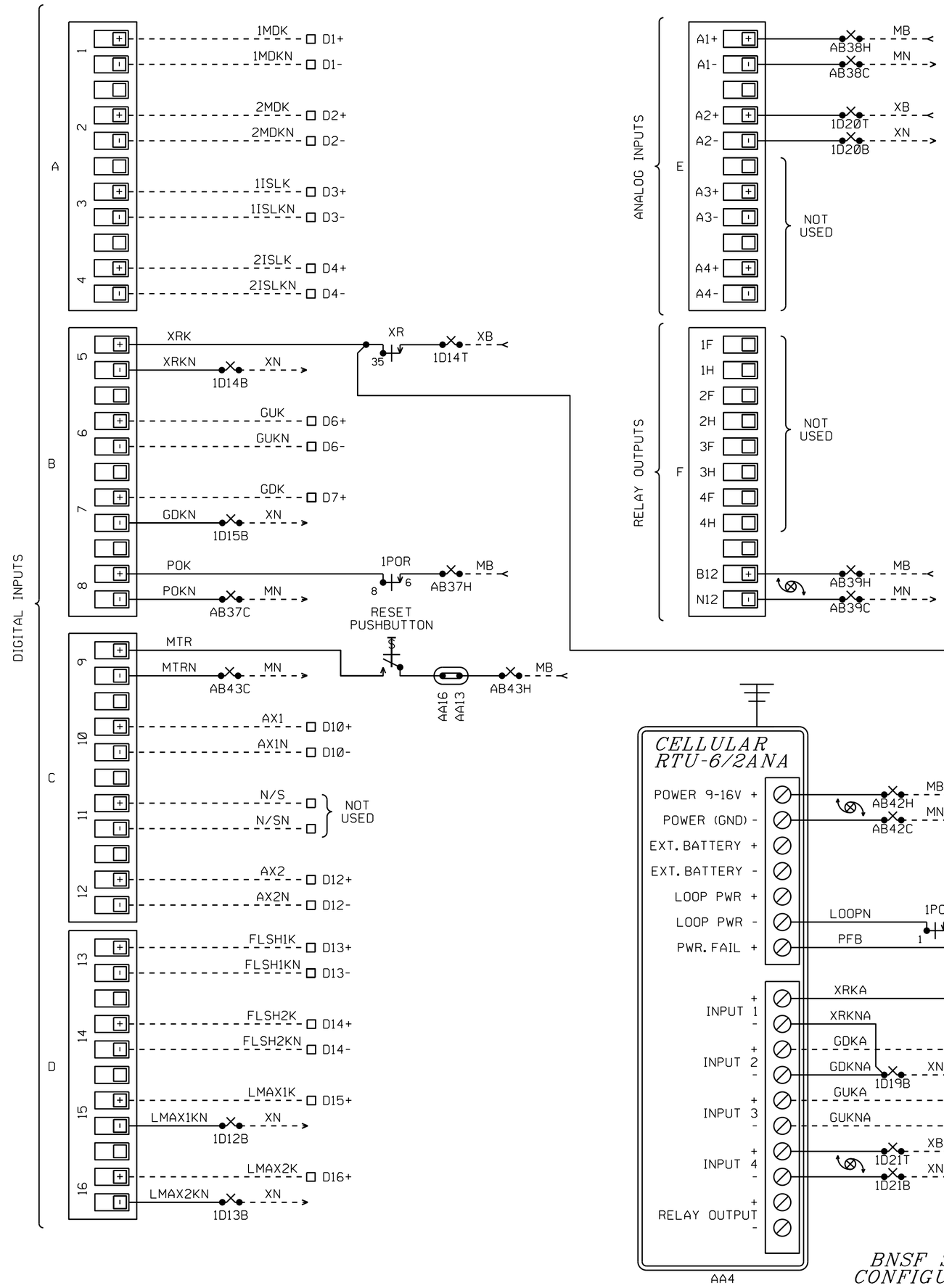

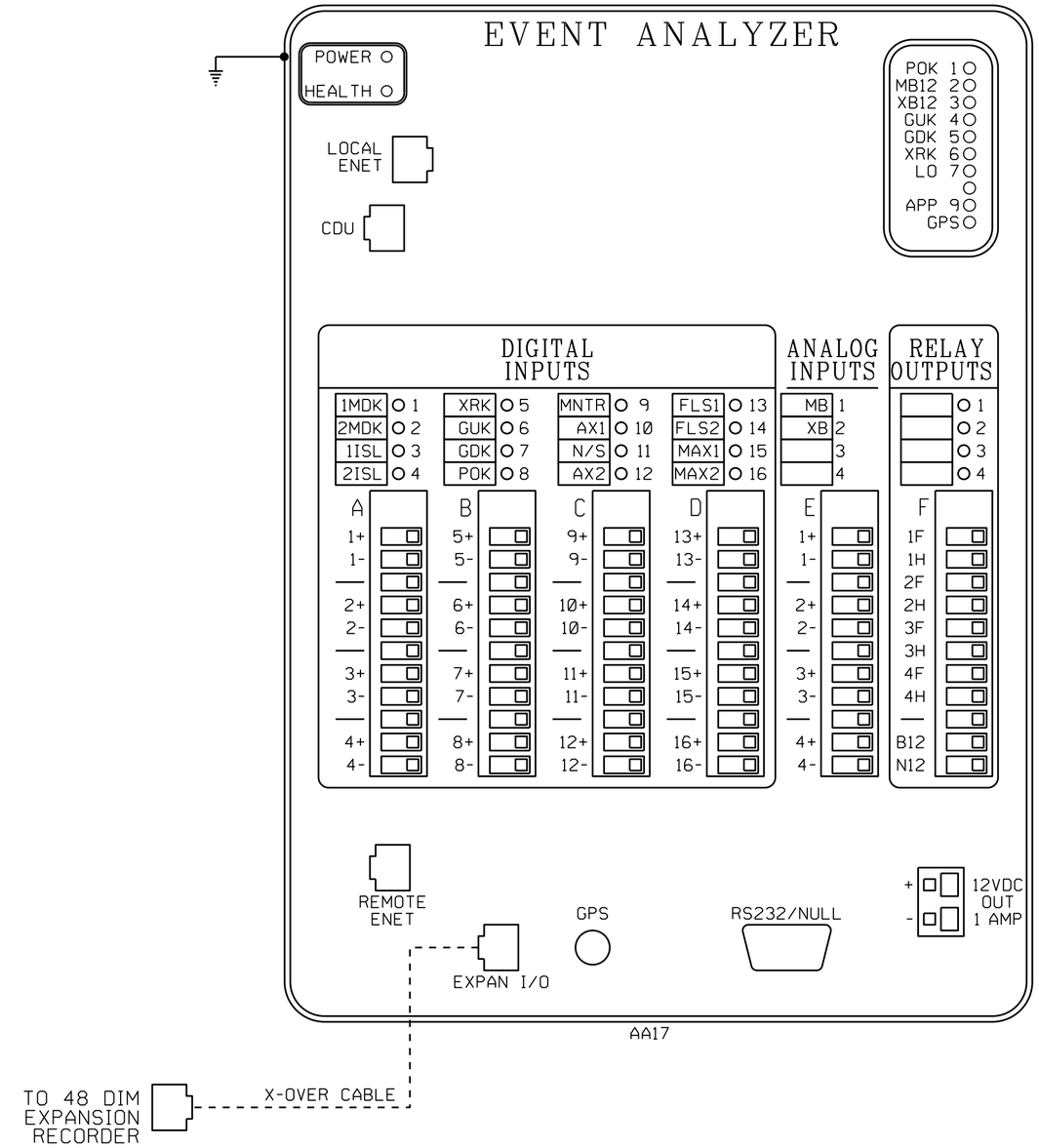

BNSF 8.0 APPLICATION CONFIGURATION INFORMATION DIGITAL INPUTS

INPUT NO.	INPUT DESCRIPTIVE NAME	ID
1	MOTION DETECTOR #1	1MDK
2	MOTION DETECTOR #2	2MDK
3	ISLAND #1	1ISLK
4	ISLAND #2	2ISLK
5	CROSSING RELAY	XRK
6	GATES UP	GUK
7	GATES DOWN	GDK
8	AC POWER	POK
9	MAINTAINER SWITCH	MTR
10	AUX INPUT 1	AX1
11	NORMAL/STANDBY	N/S
12	AUX INPUT 2	AX2
13	FLASHING LIGHTS 1	FLSH1
14	FLASHING LIGHTS 2	FLSH2
15	LOD MAX INPUT 1	LMAX1
16	LOD MAX INPUT 2	LMAX2

BNSF STANDARD CONFIGURATION 32

ALL NEW

DESIGNED 11-06-15
UPGRADE XING M.P. 191.52
XRL/PJV SED.# 55643

BURLINGTON NORTHERN SANTA FE RAILWAY

RECORDER CIRCUITS
LUDWIG STREET BUSHNELL, IL

LS 0011 | MP 191.52 | SH 06 OF 15

PLAN MUST NOT BE MODIFIED WITHOUT APPROVAL OF SIGNAL ENGINEERING COPYRIGHT 2015 BNSF RAILWAY COMPANY. ALL RIGHTS RESERVED.

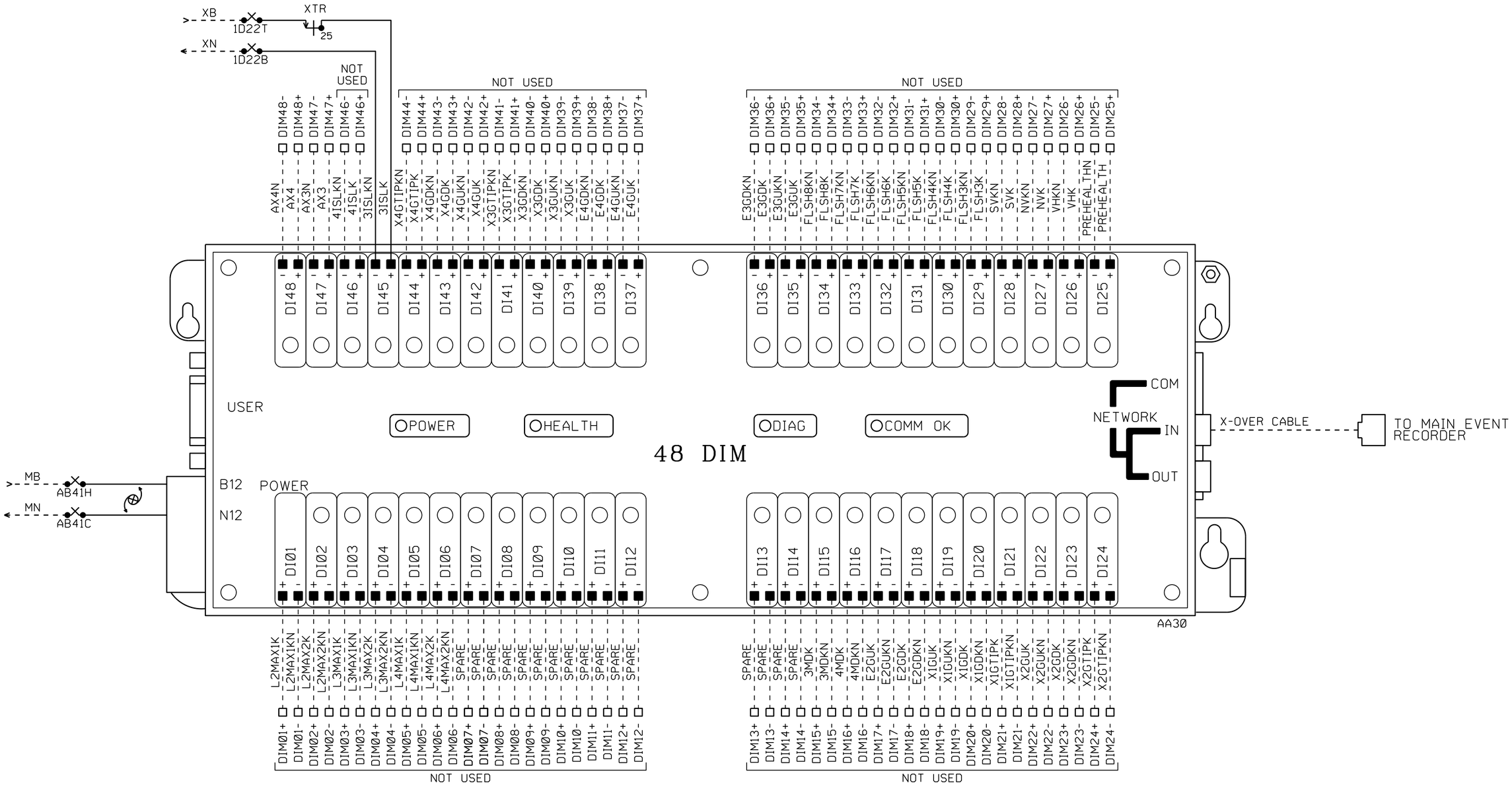

*= USER DEFINEABLE SPARE INPUT
ALL OTHERS DEFINED BY PROGRAM, DO NOT CHANGE

INPUT NO.	INPUT DESCRIPTIVE NAME	ID
1	LOD2 Max Input 1	L2MAX1K
2	LOD2 Max Input 2	L2MAX2K
3	LOD3 Max Input 1	L3MAX1K
4	LOD3 Max Input 2	L3MAX2K
5	LOD4 Max Input 1	L4MAX1K
6	LOD4 Max Input 2	L4MAX2K
7	* Spare	Spare
8	* Spare	Spare
9	* Spare	Spare
10	* Spare	Spare
11	* Spare	Spare
12	* Spare	Spare

INPUT NO.	INPUT DESCRIPTIVE NAME	ID
13	* Spare	Spare
14	* Spare	Spare
15	Motion Detect #3	3MDK
16	Motion Detect #4	4MDK
17	Entrance 2 Gate Up	E2GUK
18	Entrance 2 Gate Down	E2GDK
19	Exit 1 Gate Up	X1GUK
20	Exit 1 Gate Down	X1GDK
21	Exit 1 Gate Tip	X1GTIPK
22	Exit 2 Gate Up	X2GUK
23	Exit 2 Gate Down	X2GDK
24	Exit 2 Gate Tip	X2GTIPK

INPUT NO.	INPUT DESCRIPTIVE NAME	ID
25	Preempt	PREHLTH
26	Vehicle Health	VHK
27	Northbound Vehicle	NVK
28	Southbound Vehicle	SVK
29	Flashing Light Input 3	FLSH3K
30	Flashing Light Input 4	FLSH4K
31	Flashing Light Input 5	FLSH5K
32	Flashing Light Input 6	FLSH6K
33	Flashing Light Input 7	FLSH7K
34	Flashing Light Input 8	FLSH8K
35	Entrance 3 Gate Up	E3GUK
36	Entrance 3 Gate Down	E3GDK

INPUT NO.	INPUT DESCRIPTIVE NAME	ID
37	Entrance 4 Gate Up	E4GUK
38	Entrance 4 Gate Down	E4GDK
39	Exit 3 Gate Up	X3GUK
40	Exit 3 Gate Down	X3GDK
41	Exit 3 Gate Tip	X3GTIPK
42	Exit 4 Gate Up	X4GUK
43	Exit 4 Gate Down	X4GDK
44	Exit 4 Gate Tip	X4GTIPK
45	Island #3	3ISLK
46	Island #4	4ISLK
47	Auxiliary Drive #3	AX3
48	Auxiliary Drive #4	AX4

ALL NEW

BURLINGTON NORTHERN SANTA FE RAILWAY

RECORDER CIRCUITS
LUDWIG STREET BUSHNELL, IL

DESIGNED 11-06-15
UPGRADE XING M.P. 191.52
XRL/PJV SEQ.# 55643

LS 0011 | MP 191.52 | SH 07 OF 15

PLAN MUST NOT BE MODIFIED WITHOUT APPROVAL OF SIGNAL ENGINEERING COPYRIGHT 2015 BNSF RAILWAY COMPANY. ALL RIGHTS RESERVED.

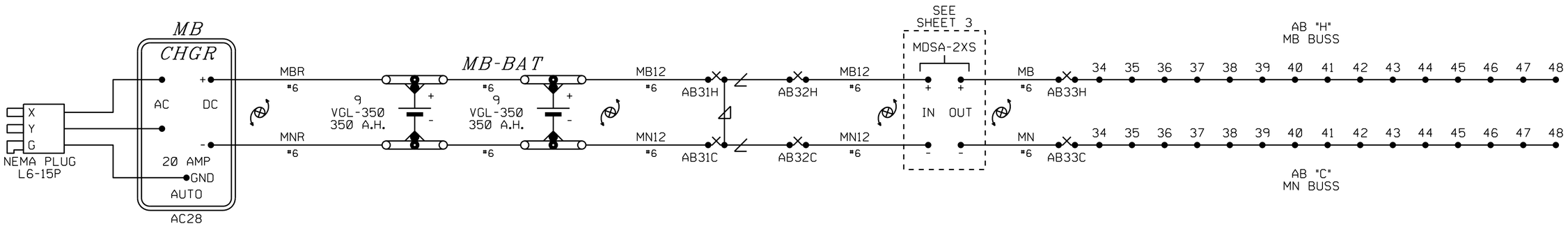

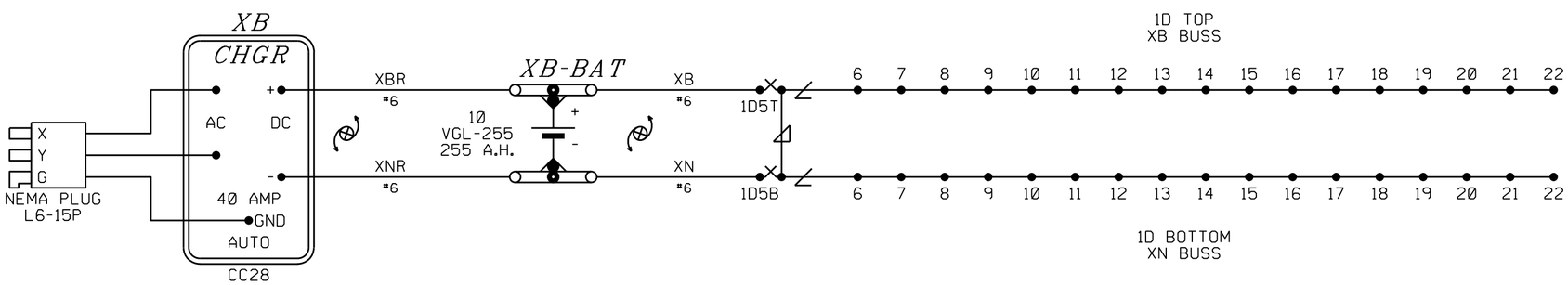

ALL NEW

DESIGNED 11-06-15
UPGRADE XING M.P. 191.52
XRL/PJV SEQ.# 55643

BURLINGTON NORTHERN SANTA FE RAILWAY

BATTERY CIRCUITS
LUDWIG STREET BUSHNELL, IL

LS 0011 | MP 191.52 | SH 08 OF 15

PLAN MUST NOT BE MODIFIED WITHOUT APPROVAL OF SIGNAL ENGINEERING COPYRIGHT 2015 BNSF RAILWAY COMPANY. ALL RIGHTS RESERVED.

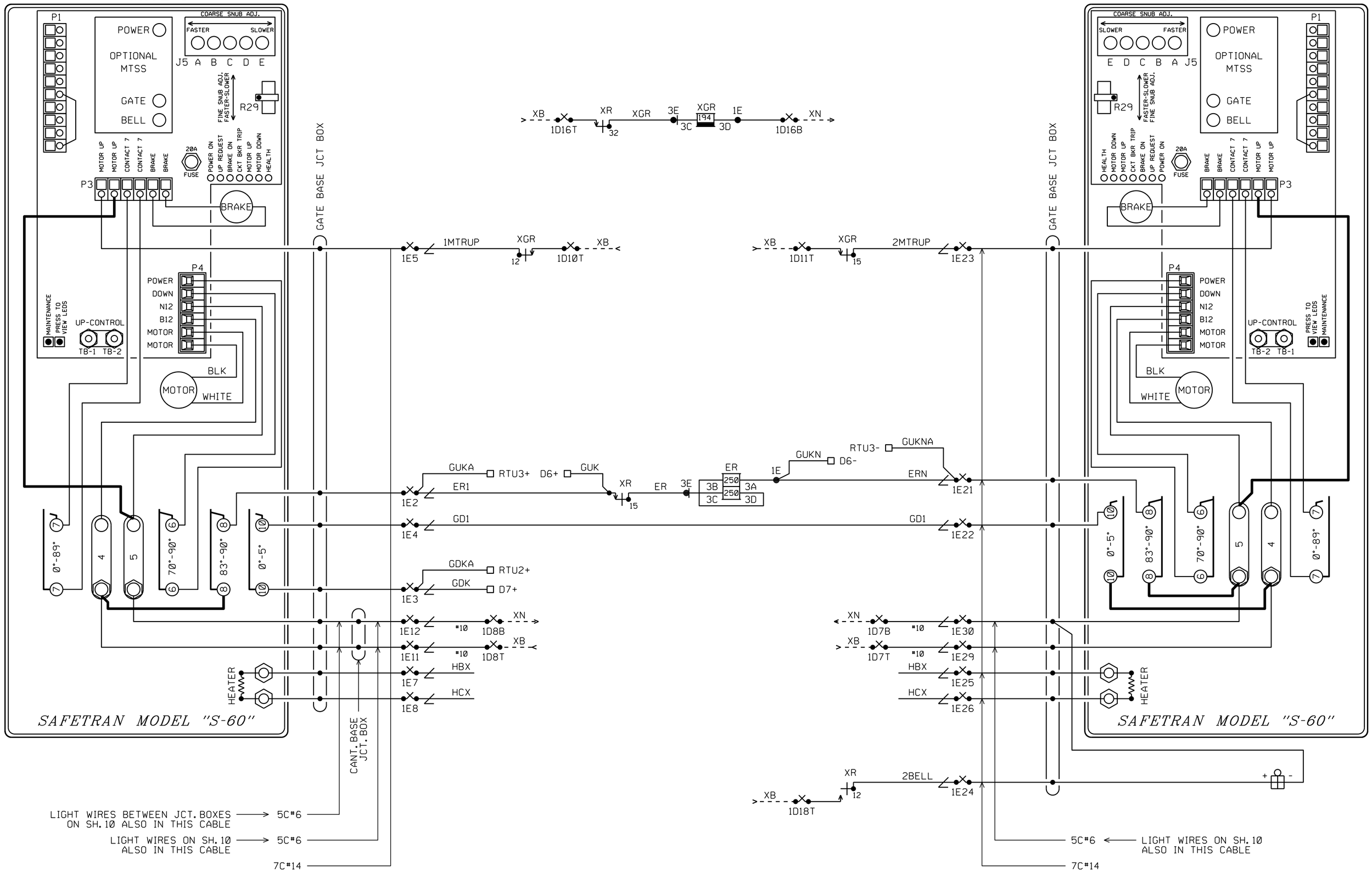

NOTES:

1. ADD JUMPERS IN GATE SHOWN IN BOLD.
2. MAXIMUM WIRE SIZE FOR TERMINAL 5 TO MOTOR UP CONTROL (-) IS #12 AWG.

GATES AND CANT REUSED

ALL NEW

BURLINGTON NORTHERN SANTA FE RAILWAY

GATE CIRCUIT PLAN
LUDWIG STREET BUSHNELL, IL

DESIGNED 11-06-15
UPGRADE XING M.P. 191.52
XRL/PJV SED.# 55643

LS 0011 | MP 191.52 | SH 09 OF 15

PLAN MUST NOT BE MODIFIED WITHOUT APPROVAL OF SIGNAL ENGINEERING COPYRIGHT 2015 BNSF RAILWAY COMPANY. ALL RIGHTS RESERVED.

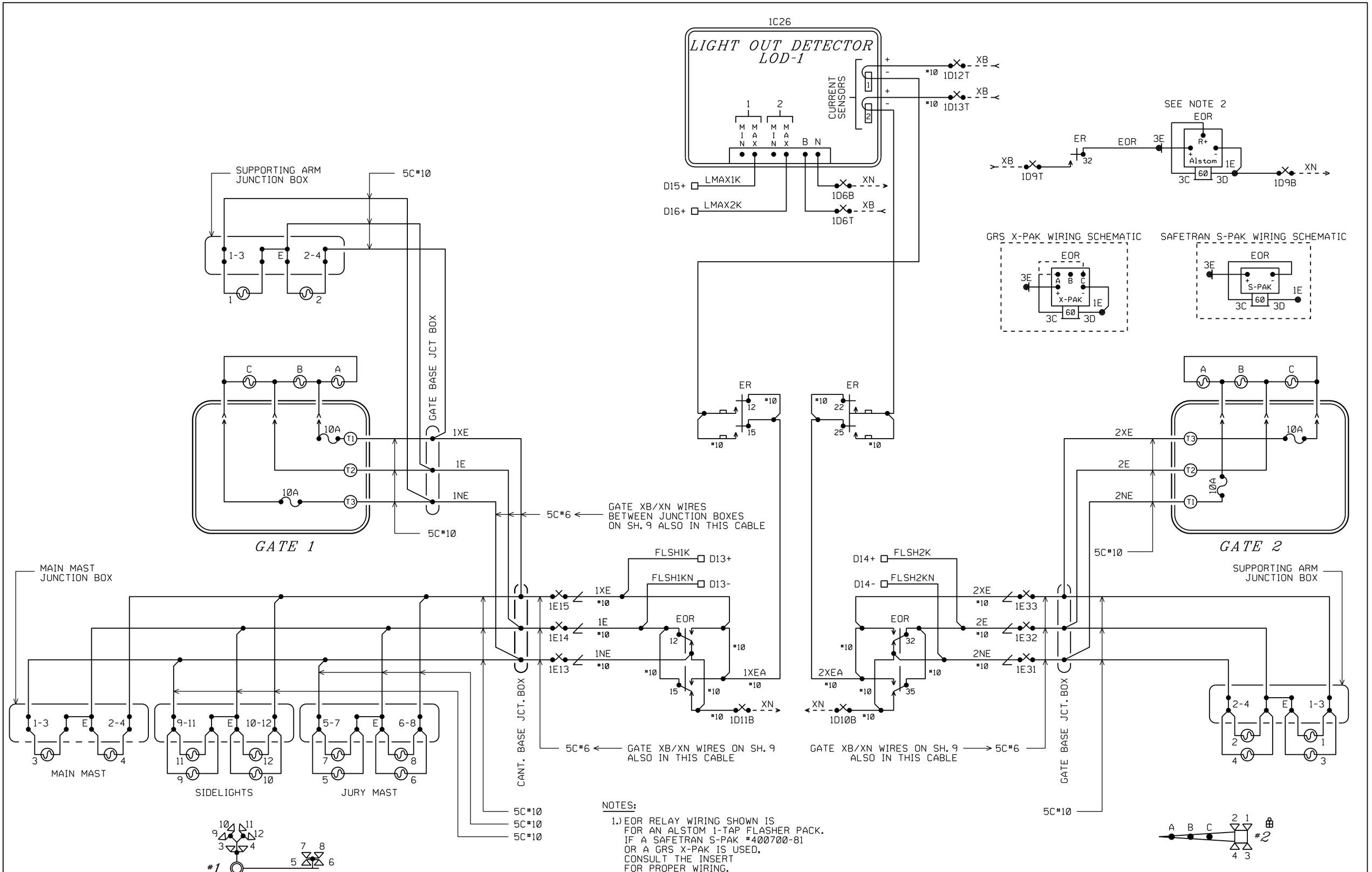

NOTES:

1.) EOR RELAY WIRING SHOWN IS FOR AN ALSTOM 1-TAP FLASHER PACK. IF A SAFETRAN S-PAK #400700-81 OR A GRS X-PAK IS USED, CONSULT THE INSERT FOR PROPER WIRING.

2.) (ALSTOM) WHEN EOR RELAY WITH 60 OHM COIL RESISTANCE IS USED ALSTOM PART #30733-003-02 SHOULD BE USED. IF 18 OHM COILS ARE USED ALSTOM PART #30733-003-04 SHOULD BE USED.

3.) (X-PAK) WHEN EOR RELAY WITH 60 OHM COIL RESISTANCE IS USED CONNECT JUMPER FROM 3C TO "A". IF 18 OHM COILS ARE USED CONNECT JUMPER FROM 3C TO "C".

4.) (S-PAK) DO NOT USE S-PAK WITH 18 OHM COILS

GATES AND CANT REUSED

ALL NEW

DESIGNED 11-06-15
UPGRADE XING M.P. 191.52
XRL/PJV SEQ.# 55643

BURLINGTON NORTHERN SANTA FE RAILWAY

FLASHER CIRCUIT PLAN
LUDWIG STREET BUSHNELL, IL

LS 0011 | MP 191.52 | SH 10 OF 15

PLAN MUST NOT BE MODIFIED WITHOUT APPROVAL OF SIGNAL ENGINEERING

COPYRIGHT 2015 BNSF RAILWAY COMPANY. ALL RIGHTS RESERVED.

NOTES:

1. USE THE FOLLOWING COLOR CODE:
   GRN - GREEN - SAFETY EQUIPMENT GROUND
   WHT - WHITE - CX110 (NEUTRAL)
   BLK - BLACK - NX220 (L2)
   RED - RED - BX220 (L1)
   EXCEPTIONS TO THE ABOVE COLOR CODE ARE THE PRE-WIRED, SEALED ARRESTOR UNITS MOUNTED ON THE BREAKER BOX WHICH HAVE TWO BLACK AND ONE WHITE WIRE EACH.
2. = WIRE NUT
3. MINIMUM WIRE SIZE
   10 AMP - NO. 14 AWG THHN OR THWN SOLID
   20 AMP - NO. 12 AWG THHN OR THWN SOLID
   30 AMP - NO. 10 AWG THHN OR THWN SOLID
4. GROUND FAULT INTERRUPT (GFCI) MUST BE USED ON ALL CIRCUITS SERVING CONVENIENCE OUTLETS AND ANY EQUIPMENT OUTSIDE THE BUNGALOW. RECEPTACLE MOUNTED GFCI MAY BE USED INSTEAD OF BREAKER TYPE.
5. ISOLATION TRANSFORMER IF INSTALLED.
   OLD: JUMPER WIRES BLK/YEL TO BLK/GRN WITH CX (WHT)
   JUMPER WIRES BLK TO BLK/RED WITH NX7 (BLK)
   NEW: JUMPER WIRES YEL TO BRN WITH CX (WHT)
   JUMPER WIRES BLK TO BLU WITH NX7 (BLK)
6. ALL GROUND WIRES RUN TO BREAKER BOX GROUND BUSS

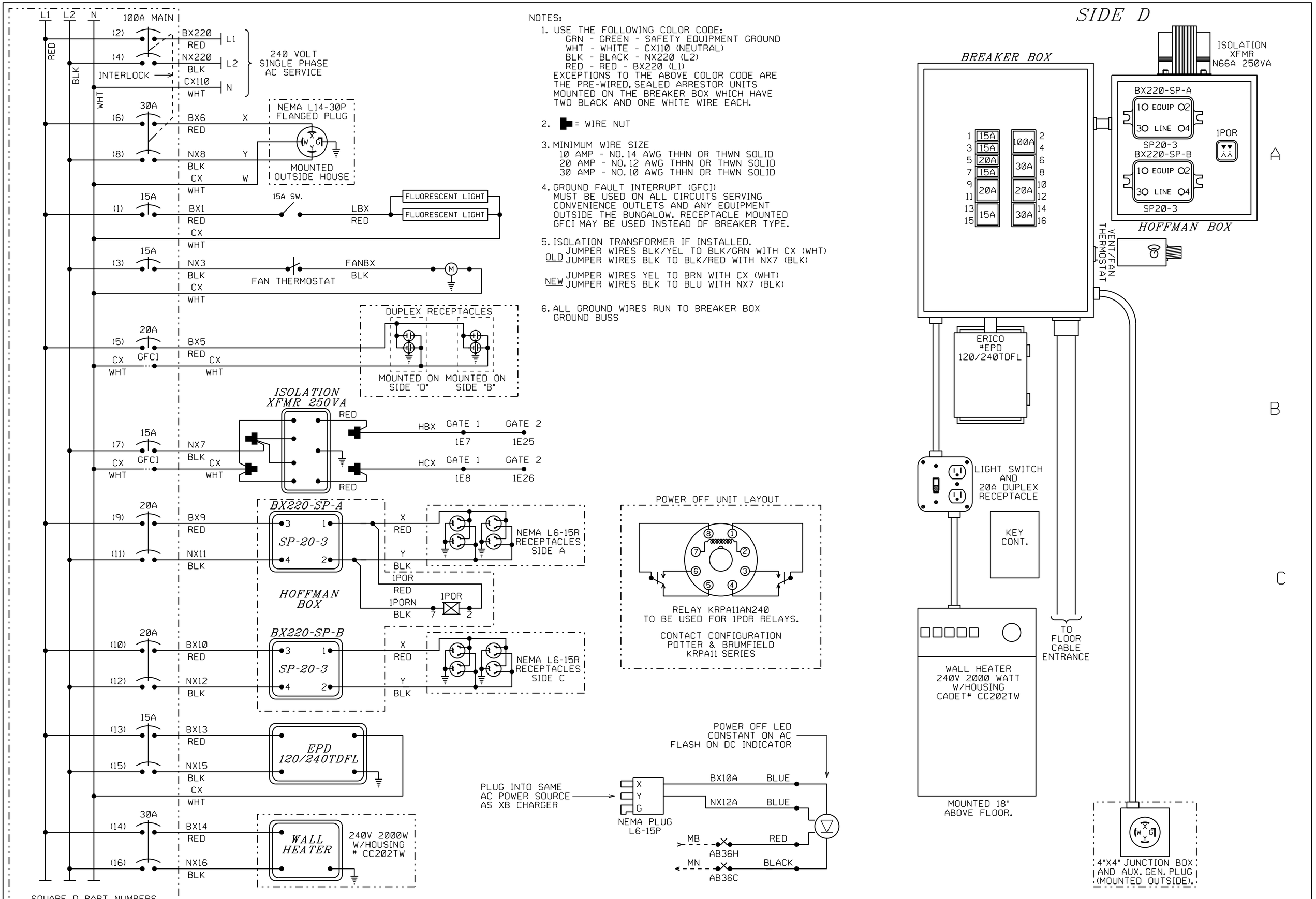

ALL NEW

DESIGNED 11-06-15
UPGRADE XING M.P. 191.52
XRL/PJV SEQ.# 55643

BURLINGTON NORTHERN SANTA FE RAILWAY

POWER DISTRIBUTION
LUDWIG STREET BUSHNELL, IL

LS 0011	MP 191.52	SH 11 OF 15

PLAN MUST NOT BE MODIFIED WITHOUT APPROVAL OF SIGNAL ENGINEERING COPYRIGHT 2015 BNSF RAILWAY COMPANY. ALL RIGHTS RESERVED.

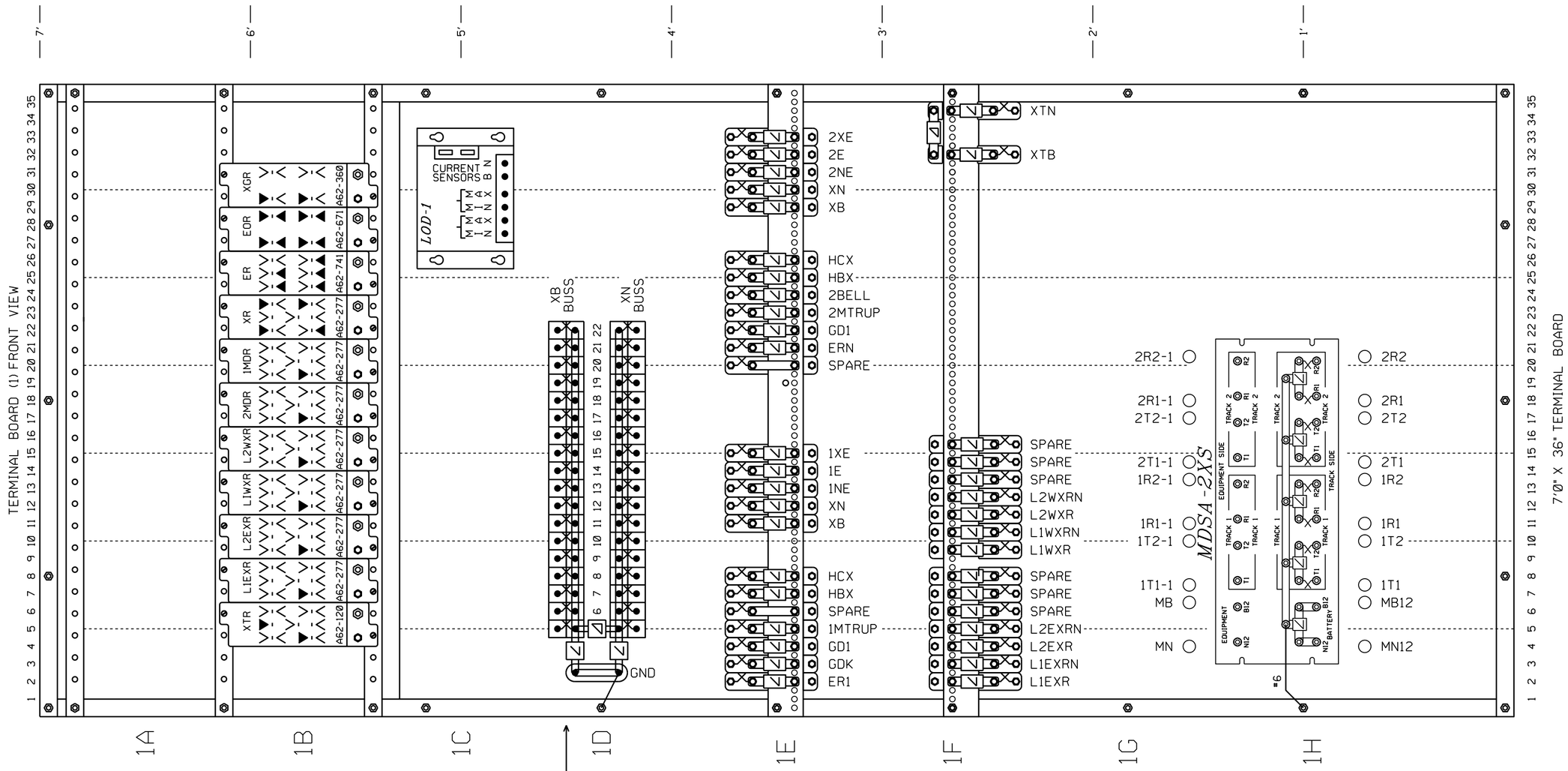

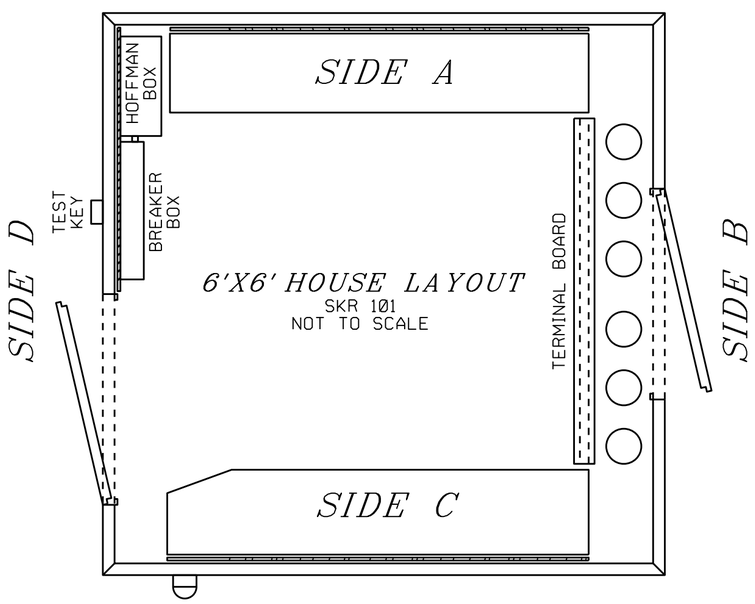

NOTE: INSTALL POWER OFF INDICATOR LIGHT ON TRACK SIDE NEAREST THE HIGHWAY AND NEAR EAVE OF HOUSE.

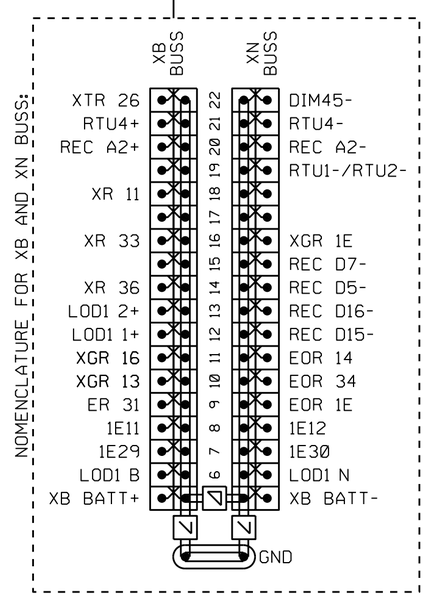

RELAY CROSS REFERENCE

GRS	SAFETRAN
A62-277	400004
A62-741	400005
A62-671	400700
A62-360	400200

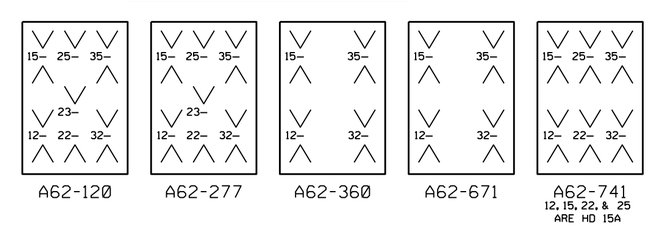

ALL NEW

DESIGNED 11-06-15
UPGRADE XING M.P. 191.52
XRL/PJV SED.# 55643

BURLINGTON NORTHERN SANTA FE RAILWAY

TERMINAL BOARD LAYOUT
LUDWIG STREET BUSHNELL, IL

LS	MP	SH
0011	191.52	12 OF 15

PLAN MUST NOT BE MODIFIED WITHOUT APPROVAL OF SIGNAL ENGINEERING COPYRIGHT 2015 BNSF RAILWAY COMPANY. ALL RIGHTS RESERVED.

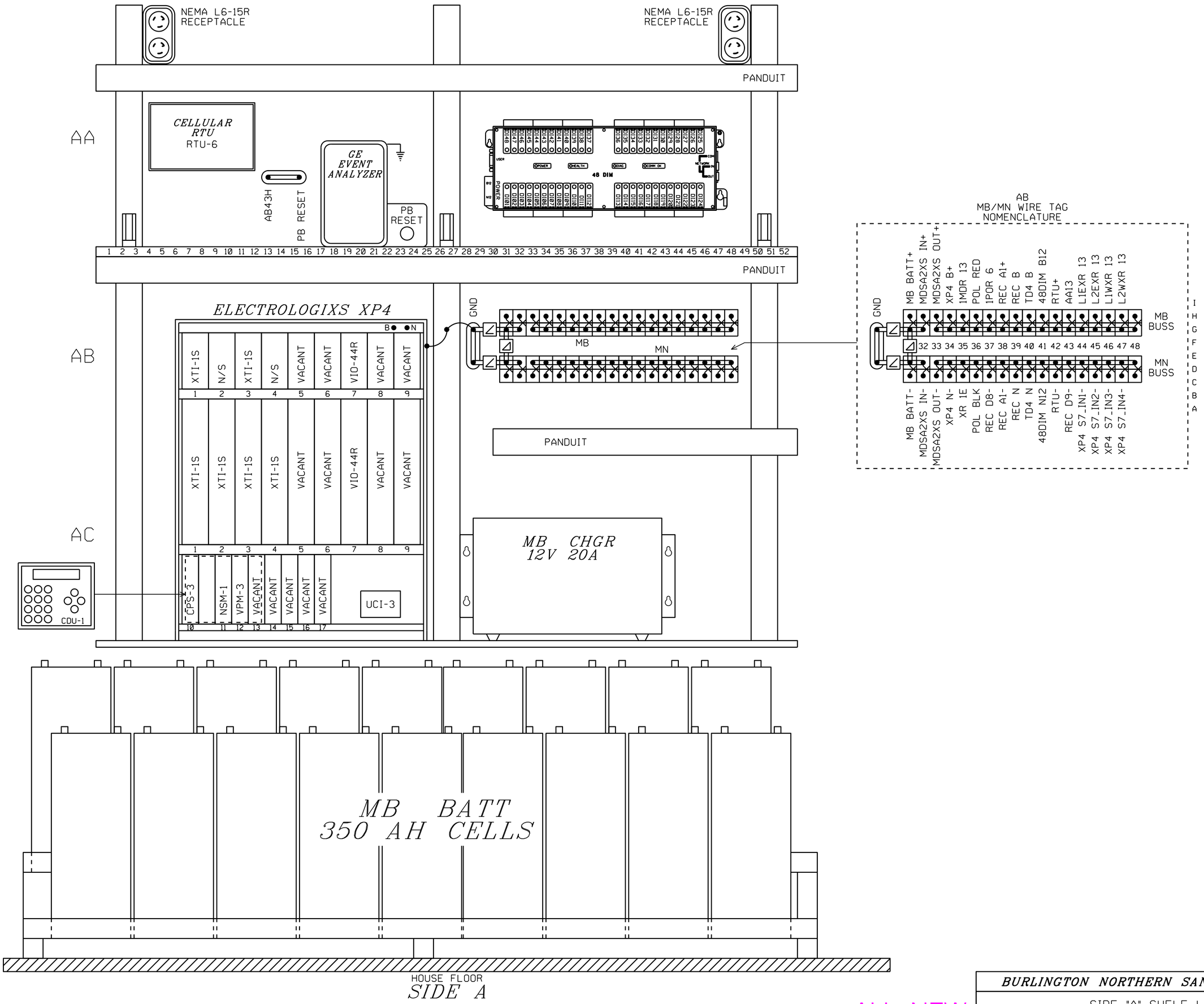

ALL NEW

DESIGNED 11-06-15
UPGRADE XING M.P. 191.52
XRL/PJV SED.# 55643

BURLINGTON NORTHERN SANTA FE RAILWAY		
SIDE "A" SHELF LAYOUT LUDWIG STREET BUSHNELL, IL		
LS 0011	MP 191.52	SH 13 OF 15

PLAN MUST NOT BE MODIFIED WITHOUT APPROVAL OF SIGNAL ENGINEERING COPYRIGHT 2015 BNSF RAILWAY COMPANY. ALL RIGHTS RESERVED.

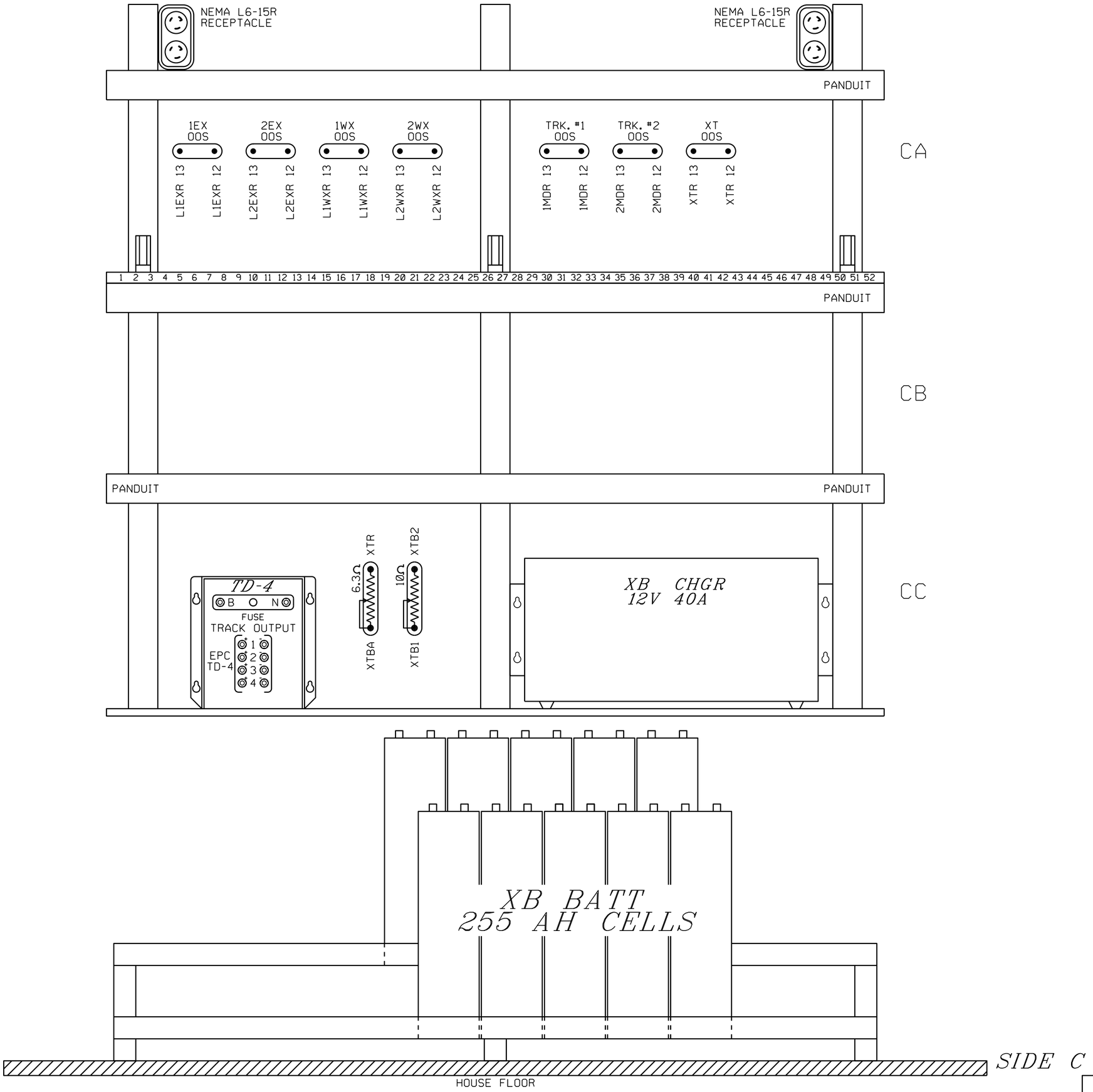

ALL NEW

DESIGNED 11-06-15
UPGRADE XING M.P. 191.52
XRL/PJV SED.# 55643

BURLINGTON NORTHERN SANTA FE RAILWAY

SIDE "C" SHELF LAYOUT
LUDWIG STREET BUSHNELL, IL

LS 0011 | MP 191.52 | SH 14 OF 15

PLAN MUST NOT BE MODIFIED WITHOUT APPROVAL OF SIGNAL ENGINEERING COPYRIGHT 2015 BNSF RAILWAY COMPANY. ALL RIGHTS RESERVED.

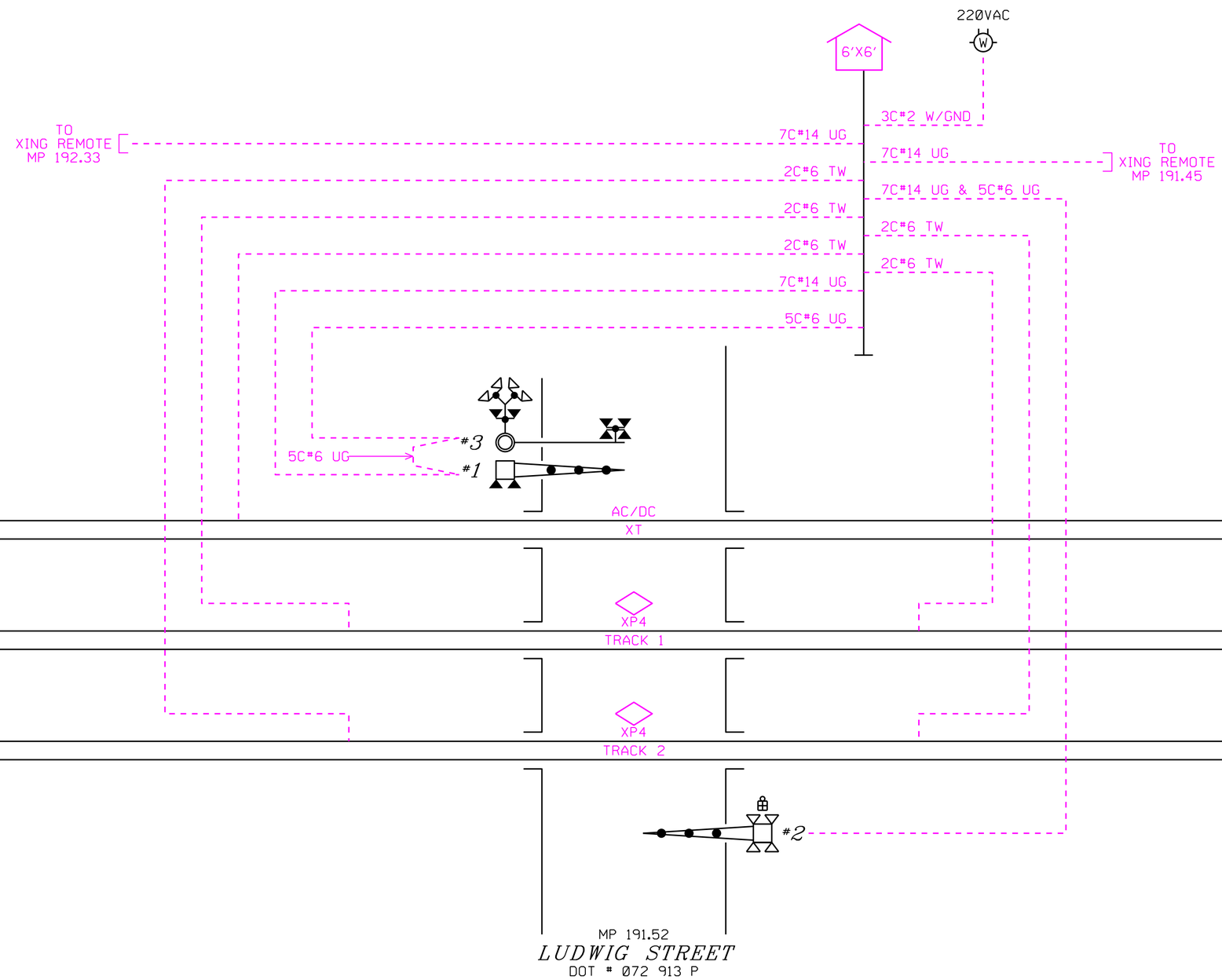

BURLINGTON NORTHERN SANTA FE RAILWAY

CABLE LAYOUT
LUDWIG STREET BUSHNELL, IL

DESIGNED 11-06-15
UPGRADE XING M.P. 191.52
XRL/PJV SED.# 55643

LS 0011 | MP 191.52 | SH 15 OF 15

PURPLE=IN TEAL=OUT