PLAN MUST NOT BE MODIFIED WITHOUT APPROVAL OF SIGNAL ENGINEERING COPYRIGHT 2015 BNSF RAILWAY COMPANY. ALL RIGHTS RESERVED.

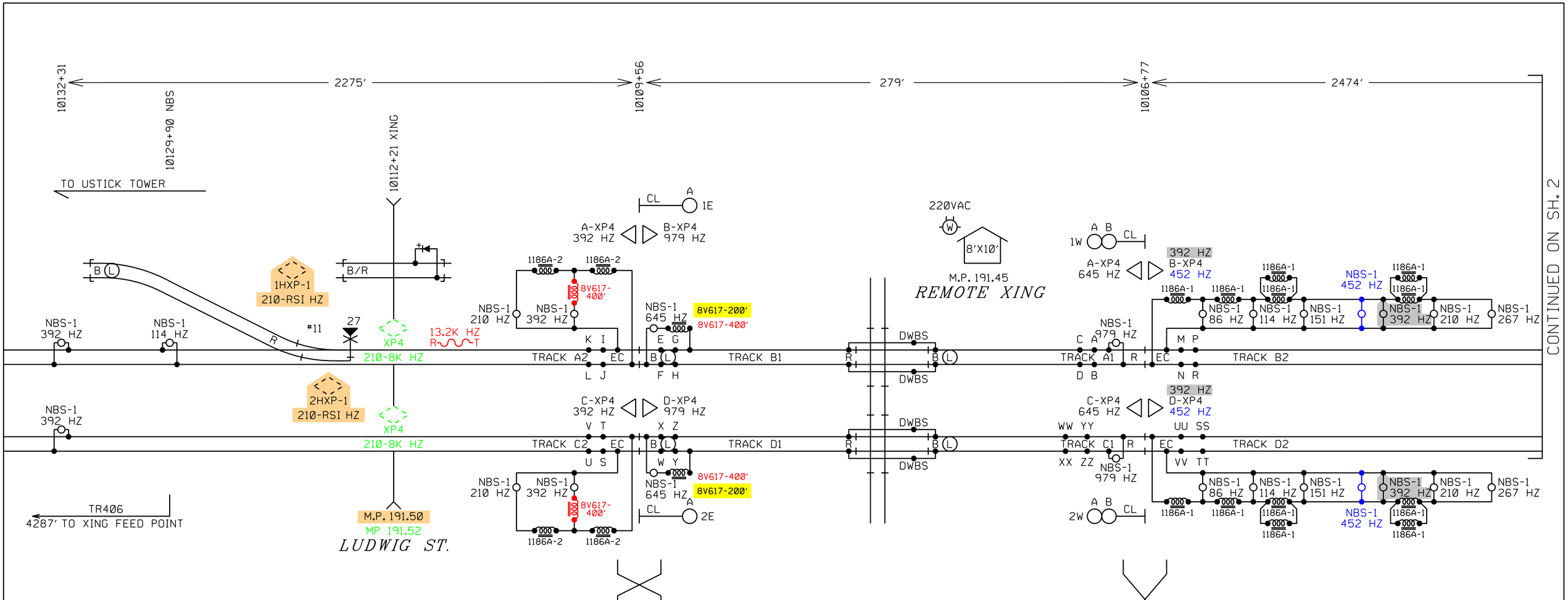

NOTES FOR DAVIS ST.:

EQUIPMENT IS DESIGNED FOR 20 SECONDS MINIMUM WARNING TIME AT 50 MPH EASTBOUND.
APPROACHES WERE LENGTHENED 4 SECOND(S) FOR WIDE OR ANGLED CROSSING (CT).
APPROACHES WERE LENGTHENED 10 SECONDS FOR SPEED VARIANCE AND BALLAST CHANGES (BT).
APPROACHES WERE LENGTHENED 4 SECONDS FOR EQUIPMENT RESPONSE TIME (ERT).

NOTES FOR HURST ST.:

EQUIPMENT IS DESIGNED FOR 20 SECONDS MINIMUM WARNING TIME AT 50 MPH EASTBOUND.
APPROACHES WERE LENGTHENED 1 SECOND(S) FOR WIDE OR ANGLED CROSSING (CT).
APPROACHES WERE LENGTHENED 10 SECONDS FOR SPEED VARIANCE AND BALLAST CHANGES (BT).
APPROACHES WERE LENGTHENED 4 SECONDS FOR EQUIPMENT RESPONSE TIME (ERT).

NOTES FOR HAIL ST.:

EQUIPMENT IS DESIGNED FOR 20 SECONDS MINIMUM WARNING TIME AT 50 MPH EASTBOUND.
APPROACHES WERE LENGTHENED 1 SECOND(S) FOR WIDE OR ANGLED CROSSING (CT).
APPROACHES WERE LENGTHENED 10 SECONDS FOR SPEED VARIANCE AND BALLAST CHANGES (BT).
APPROACHES WERE LENGTHENED 4 SECONDS FOR EQUIPMENT RESPONSE TIME (ERT).

NOTES FOR GRIDLEY ST.:

EQUIPMENT IS DESIGNED FOR 20 SECONDS MINIMUM WARNING TIME AT 79 MPH EASTBOUND.
APPROACHES WERE LENGTHENED 1 SECOND(S) FOR WIDE OR ANGLED CROSSING (CT).
APPROACHES WERE LENGTHENED 10 SECONDS FOR SPEED VARIANCE AND BALLAST CHANGES (BT).
APPROACHES WERE LENGTHENED 4 SECONDS FOR EQUIPMENT RESPONSE TIME (ERT).

NOTES FOR OSBORN ST.:

EQUIPMENT IS DESIGNED FOR 20 SECONDS MINIMUM WARNING TIME AT 79 MPH EASTBOUND.
APPROACHES WERE LENGTHENED 1 SECOND(S) FOR WIDE OR ANGLED CROSSING (CT).
APPROACHES WERE LENGTHENED 10 SECONDS FOR SPEED VARIANCE AND BALLAST CHANGES (BT).
APPROACHES WERE LENGTHENED 4 SECONDS FOR EQUIPMENT RESPONSE TIME (ERT).

NOTES FOR LUDWIG ST.:

EQUIPMENT IS DESIGNED FOR 20 SECONDS MINIMUM WARNING TIME AT 50 MPH WESTBOUND.
APPROACHES WERE LENGTHENED 6 SECOND(S) FOR WIDE OR ANGLED CROSSING (CT).
APPROACHES WERE LENGTHENED 10 SECONDS FOR SPEED VARIANCE AND BALLAST CHANGES (BT).
APPROACHES WERE LENGTHENED 4 SECONDS FOR EQUIPMENT RESPONSE TIME (ERT).

NOTES:

-TEST TERMINAL
-EQUALIZER
-LINE ARRESTER
-HEAVY DUTY ARRESTER
-TWISTED WIRE 2 TURNS PER FOOT

ALL WIRES #16 AWG UNLESS OTHERWISE NOTED

ALL NEW
REVISED 03-01-13

DESIGNED 04-01-12
BROOKFIELD SUB PTC SEG 1
TCS/BNSF SEQ.# 49076

DESIGNED 11-06-15
UPGRADE XING M.P. 191.52
XRL/PJV SEQ.# 55643

12-09-15 SEQ:55643 PH:
CHANGE FREQ MP 191.45
DES: XRL/PJV COR: /

BURLINGTON NORTHERN SANTA FE RAILWAY

CROSSING CIRCUIT PLAN
CROSSING REMOTE BUSHNELL, IL

LS 0011 MP 0191.45 SH 01 OF 21

RED = IN YELLOW = OUT GREEN = IN BROWN = OUT BLUE = IN GREY = OUT

PLAN MUST NOT BE MODIFIED WITHOUT APPROVAL OF SIGNAL ENGINEERING COPYRIGHT 2015 BNSF RAILWAY COMPANY. ALL RIGHTS RESERVED.

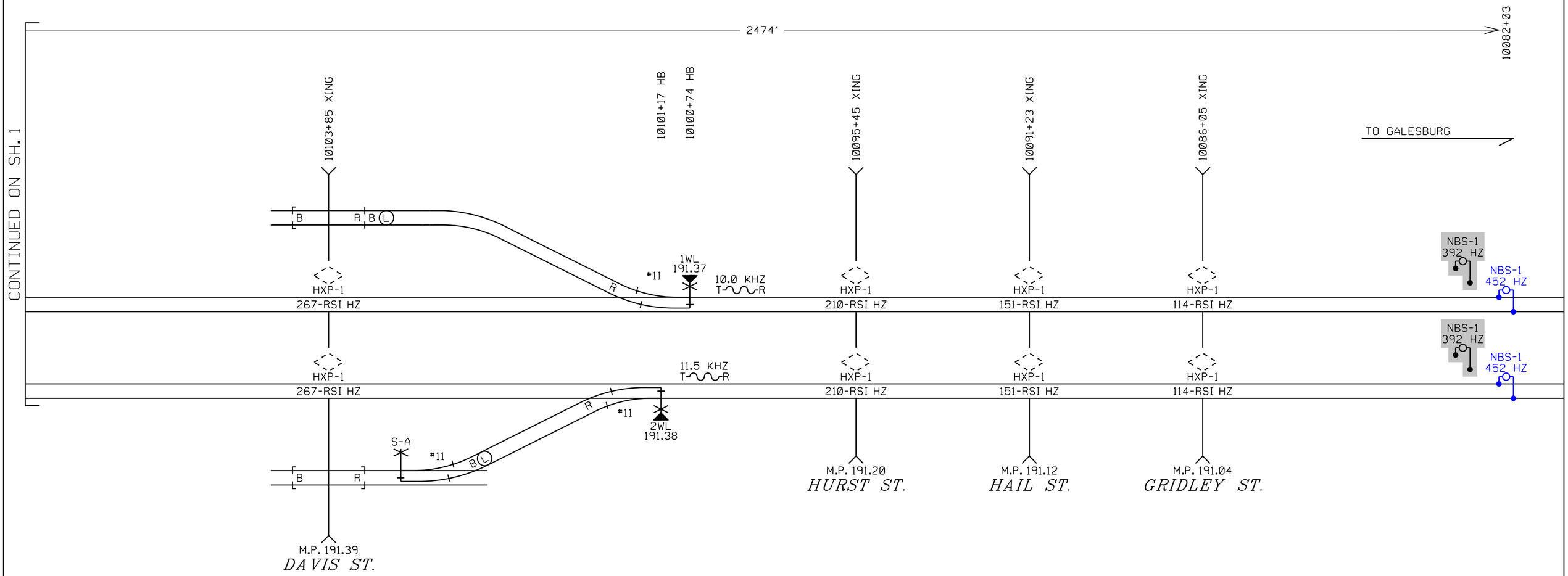

ALL NEW

REVISED 03-01-13

DESIGNED 04-01-12
BROOKFIELD SUB PTC SEG 1
TCS/BNSF SEQ.# 49076

12-09-15 SEQ:55643 PH:
CHANGE FREQ MP 191.45
DES: XRL / PJV COR: /

BURLINGTON NORTHERN SANTA FE RAILWAY

CROSSING CIRCUIT PLAN
CROSSING REMOTE BUSHNELL, IL

LS 0011 MP 0191.45 SH 02 OF 21

0011_0191.45_02c.dgn December 09, 2015

BLUE = IN GREY = OUT

PLAN MUST NOT BE MODIFIED WITHOUT APPROVAL OF SIGNAL ENGINEERING COPYRIGHT 2015 BNSF RAILWAY COMPANY. ALL RIGHTS RESERVED.

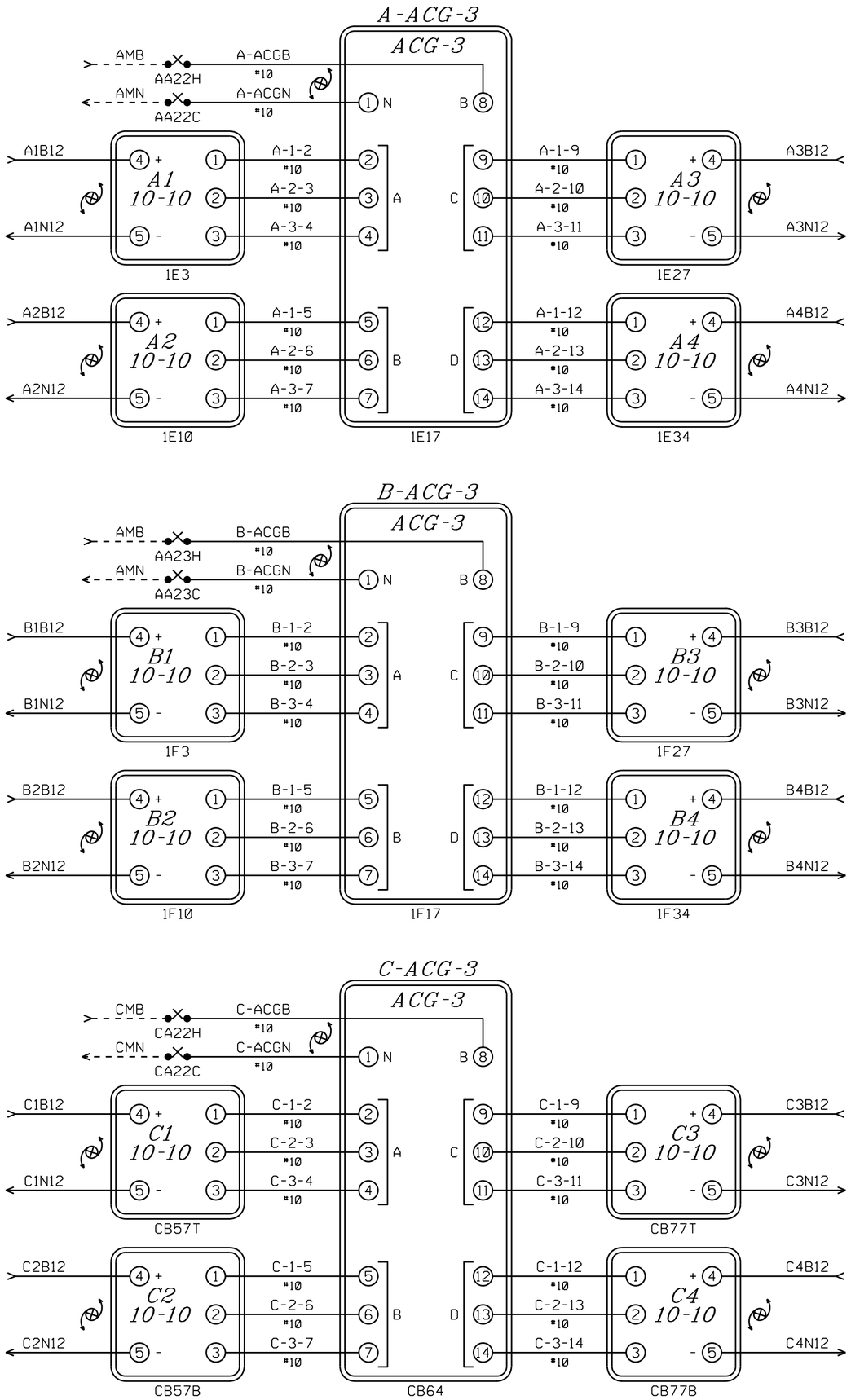

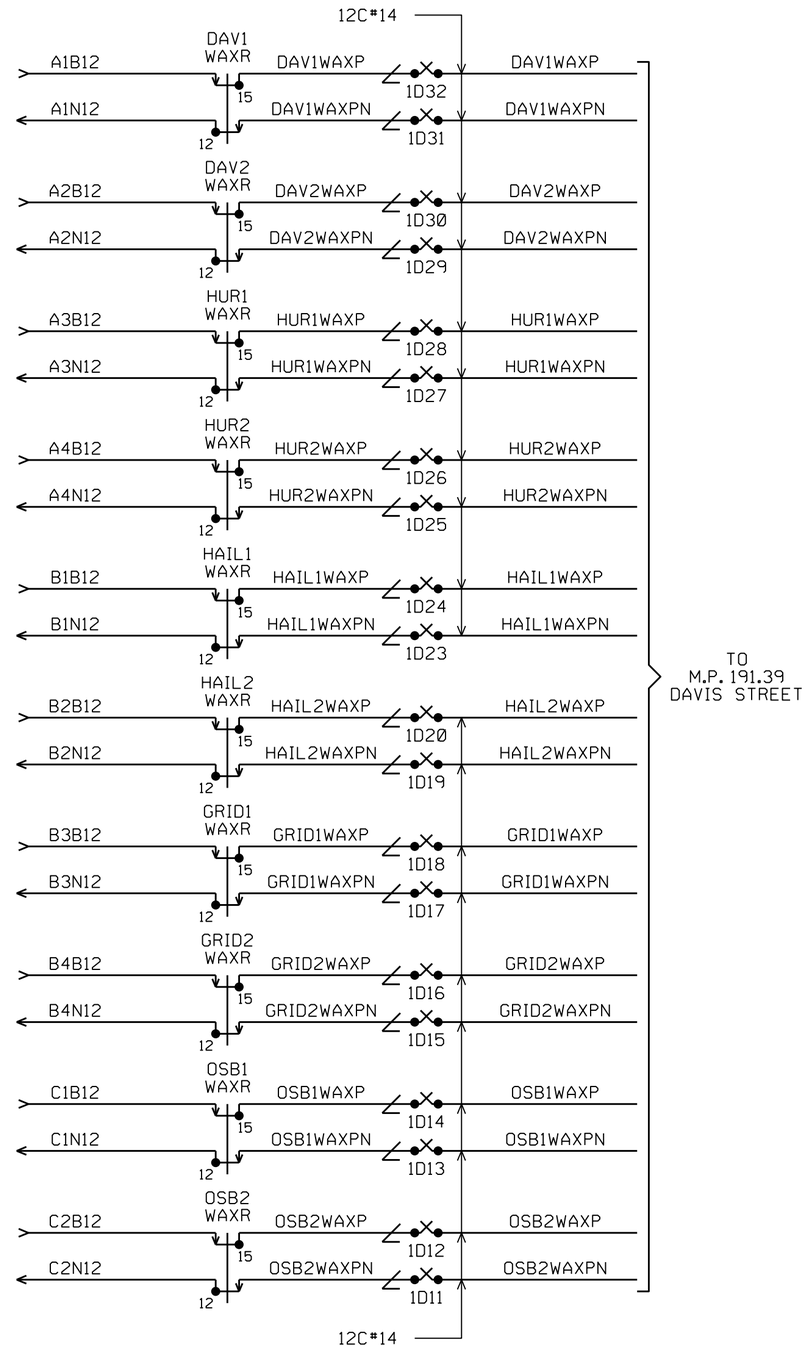

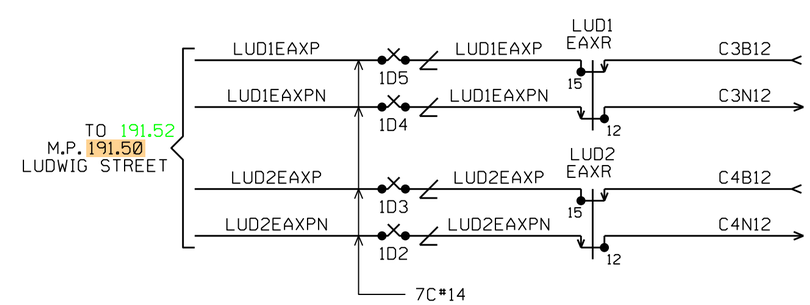

ALL NEW

DESIGNED 04-01-12
BROOKFIELD SUB PTC SEG 1
TCS/BNSF SED.# 49076

DESIGNED 11-06-15
UPGRADE XING M.P. 191.52
XRL/PJV SED.# 55643

GREEN = IN BROWN = OUT

BURLINGTON NORTHERN SANTA FE RAILWAY

AX CIRCUITS
CROSSING REMOTE BUSHNELL, IL

LS 0011 MP 0191.45 SH 03 OF 21

0011_0191.45_03c.dgn December 09, 2015

PLAN MUST NOT BE MODIFIED WITHOUT APPROVAL OF SIGNAL ENGINEERING COPYRIGHT 2015 BNSF RAILWAY COMPANY. ALL RIGHTS RESERVED.

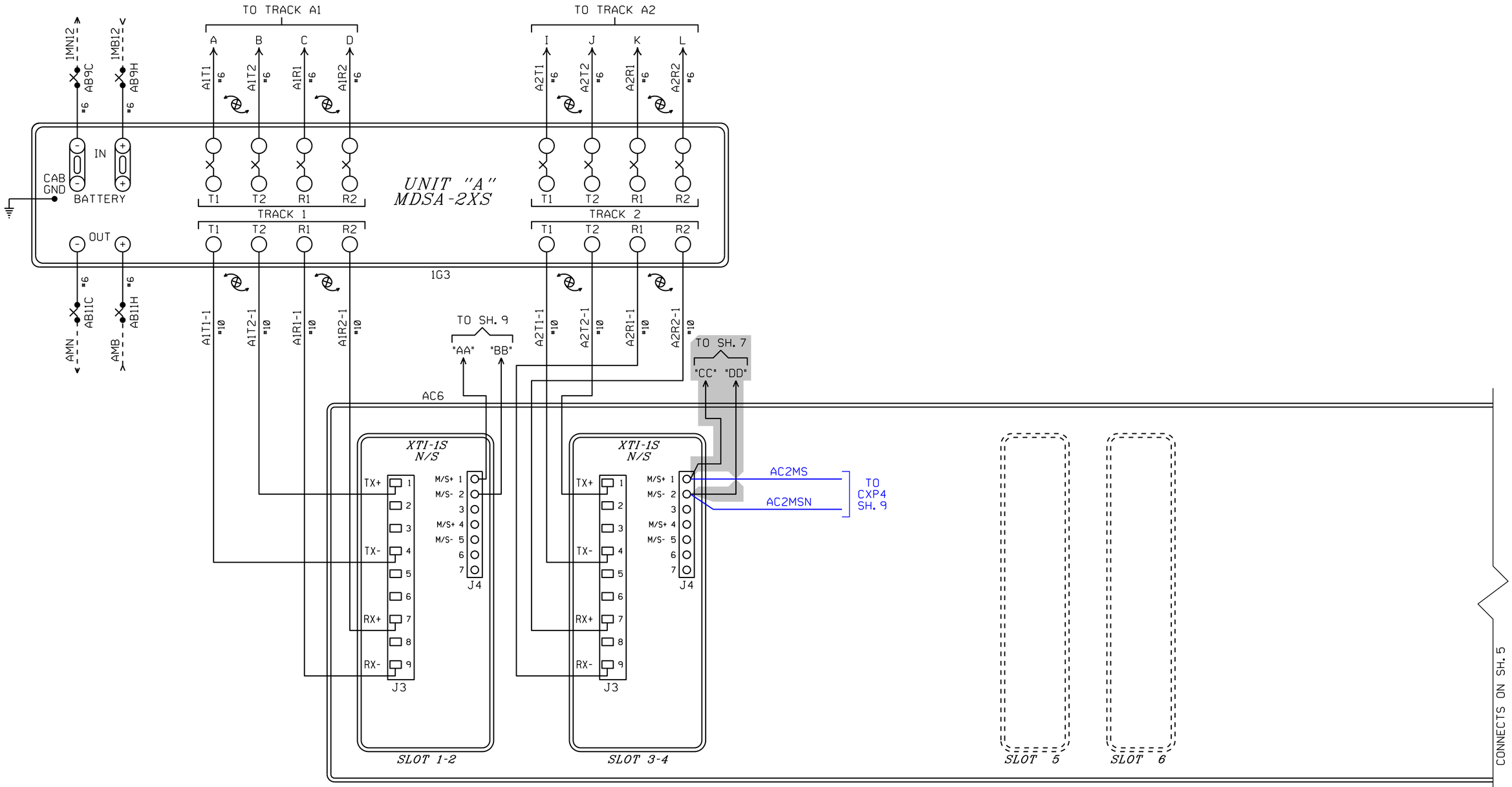

ALL NEW

BURLINGTON NORTHERN SANTA FE RAILWAY

UNIT "A" XP4 TRACK CIRCUITS
CROSSING REMOTE BUSHNELL, IL

DESIGNED 04-01-12
BROOKFIELD SUB PTC SEG 1
TCS/BNSF SEQ.# 49076

12-09-15 SEQ:55643 PH:
CHANGE FREQ MP 191.45
DES: XRL / PJV COR: /

LS 0011 MP 0191.45 SH 04 OF 21

BLUE = IN GREY = OUT

PLAN MUST NOT BE MODIFIED WITHOUT APPROVAL OF SIGNAL ENGINEERING COPYRIGHT 2015 BNSF RAILWAY COMPANY. ALL RIGHTS RESERVED.

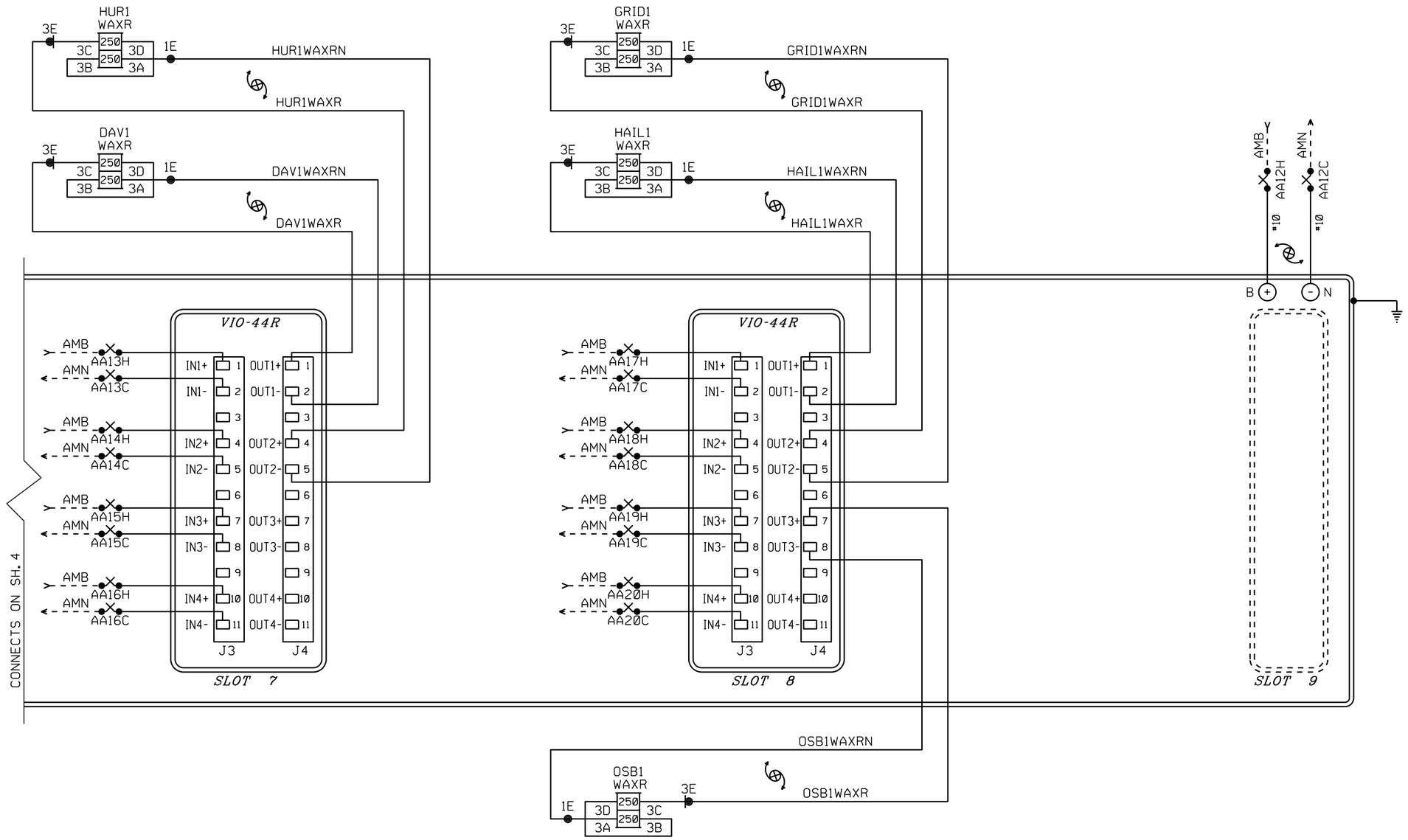

ALL NEW

DESIGNED 04-01-12
BROOKFIELD SUB PTC SEG 1
TCS/BNSF SEQ.# 49076

BURLINGTON NORTHERN SANTA FE RAILWAY

UNIT "A" XP4 TRACK CIRCUITS
CROSSING REMOTE BUSHNELL, IL

LS 0011 MP 0191.45 SH 05 OF 21

PLAN MUST NOT BE MODIFIED WITHOUT APPROVAL OF SIGNAL ENGINEERING COPYRIGHT 2015 BNSF RAILWAY COMPANY. ALL RIGHTS RESERVED.

APPLICATION SOFTWARE INFO

TYPE	REDUNDANT
NAME	2t_c9_2₁
CONFIGURATION	9
CHECKSUM	B16E
CRC	B5DB

CHASSIS ID

DIP NO.	1	2	3	4	5	6	7	8
SHUNT	X	X	X	I	X	X	X	X
CHASSIS ID DECIMAL	16							

NOTE: I = TAB INTACT
X = TAB PUNCHED OUT

VITAL I/O SLOT 7 INPUTS

INPUT #	NAME	FUNCTION
INPUT 1	S7_IN1_AUX1	AUX/CWE For MDR1
INPUT 2	S7_IN2_AUX2	AUX/CWE For MDR2
INPUT 3	S7_IN3_AUX3	AUX/CWE For MDR3
INPUT 4	S7_IN4_ISL1	ISL 1 INPUT CONTROL

SLOT 7 OUTPUTS

OUTPUT #	NAME	FUNCTION
OUTPUT 1	S7_OUT1_MDR1	RELAY OUTPUT-MDR1
OUTPUT 2	S7_OUT2_MDR2	RELAY OUTPUT-MDR2
OUTPUT 3	S7_OUT3_MDR3	RELAY OUTPUT-MDR3
OUTPUT 4	S7_OUT4_MDR4	RELAY OUTPUT-MDR4

VITAL I/O SLOT 8 INPUTS

INPUT #	NAME	FUNCTION
INPUT 1	S8_IN1_AUX5	AUX/CWE For MDR5
INPUT 2	S8_IN2_AUX6	AUX/CWE For MDR6
INPUT 3	S8_IN3_AUX7	AUX/CWE For MDR7
INPUT 4	S8_IN4_AUX8	AUX/CWE For MDR8

SLOT 8 OUTPUTS

OUTPUT #	NAME	FUNCTION
OUTPUT 1	S8_OUT1_MDR5	RELAY OUTPUT-MDR5
OUTPUT 2	S8_OUT2_MDR6	RELAY OUTPUT-MDR6
OUTPUT 3	S8_OUT3_MDR7	RELAY OUTPUT-MDR7
OUTPUT 4	S8_OUT4_MDR8	RELAY OUTPUT-MDR8

PROGRAM VERSION 5.9 OR LATER

*=FIELD ADJUSTMENT TO BE MADE ACCORDING TO THE XP4 INSTRUCTION MANUAL 100323-010 AH0 & SUPPLEMENTS.

BASIC TRACK SETUP

ADJUSTMENT NAME	TRACK 1	TRACK 2
ISLAND ASSIGNMENT	ISL1_ASSIGN	ISL2_ASSIGN
APPROACH FREQUENCY (HZ)	645 HZ	392 HZ
APPROACH LENGTH (FEET)	279	2275
MASTER/SLAVE	MASTER	MASTER
UNI/BI	UNI	BI
RX ADJUST	100	100
TCA (TRANSMITTER CHECK)	*	*
LIA (LUMPED IMPEDANCE)	*	*
ADVANCED APR. CAL	INACTIVE	INACTIVE
NBS COMP RX	*	*
AUTO RX	ENABLE	ENABLE
MD TIMER ENABLE	DISABLE	DISABLE
MD TIMER DELAY (MIN.)	10	10
LOS TIME (SEC.)	16 SEC.	16 SEC.
IJ-LOS TIME (SEC.)	5 SEC.	5 SEC.
FALSE SHUNT ENABLE	DISABLE	DISABLE
FALSE SHUNT RX	0	0
FALSE SHUNT DELAY (MIN.)	10	10
APPROACH RELEASE ENABLE	DISABLE	DISABLE
APPROACH RELEASE RX	0	0
APPROACH RELEASE DELAY (MIN.)	10	10
NRML_SHRT_VRYSHRT	NRML	NRML

3892′ SLAVE

ISLAND SETUP

TRACK #	TRACK 1	TRACK 2
FREQUENCY (HZ)	0000 HZ	0000 HZ
ISLAND ENABLE	DISABLE	DISABLE
FAULT DELAY	NA	NA
LOS COUNT (SEC.)	NA	NA

MAINTENANCE MENU

TRACK #	TRACK 1	TRACK 2
ENABLE/DISABLE	ENABLE	ENABLE
DISABLE TIMEOUT	*	*
BALLAST COMP.	*	*
PHASE COMP.	*	*

NOTE: DL = DEFAULT LEVEL
NA = NON APPLICABLE

MDR SETUP FOR SLOT 8

MDR #	MDR 5		MDR 6		MDR 7		MDR 8	
WARNING TIME (SECS.)	31		31		31		99	
CONSTANT WARNING (CW) OR MOTION DETECTOR (MD)	CW		CW		CW		MD	
TRACK ASSIGN	1	2	1	2	1	2	ASSIGNABLE	ASSIGNABLE
TRACK OFFSET DISTANCE (FEET)	1494	1773	2012	2291	3117	3396	0	0
MD RESTART RX	*0	*0	*0	*0	*0	*0	*0	*0
SUDDEN SHUNT ZONE RX	0	0	0	0	0	0	0	0
POST JOINT	ENABLE	ENABLE	ENABLE	ENABLE	ENABLE	ENABLE	ENABLE	ENABLE
POST JOINT RX	15	15	15	15	15	15	15	15
POST JOINT DELAY (SECS.)	15	15	15	15	15	15	15	15
POSITIVE START	DISABLE	DISABLE	DISABLE	DISABLE	DISABLE	DISABLE	DISABLE	DISABLE
POSITIVE START RX	0	0	0	0	0	0	0	0
POSITIVE START ACTIVE TIME (MIN.)	0	0	0	0	0	0	0	0
AUX RECOVERY DELAY (SECS.)	0		0		0		0	
CWE-WT	80		80		80		80	

3177′ 3456′

NOTE:
THESE ARE DEFAULT VALUES. FIELD ASSIGNABLE.

MDR SETUP FOR SLOT 7

MDR #	MDR 1		MDR 2		MDR 3		MDR 4	
WARNING TIME (SECS.)	34		31		99		99	
CONSTANT WARNING (CW) OR MOTION DETECTOR (MD)	CW		CW		MD		MD	
TRACK ASSIGN	1	2	1	2	ASSIGNABLE	ASSIGNABLE	ASSIGNABLE	ASSIGNABLE
TRACK OFFSET DISTANCE (FEET)	232	511	1072	1351	0	0	0	0
MD RESTART RX	*0	*0	*0	*0	*0	*0	*0	*0
SUDDEN SHUNT ZONE RX	0	0	0	0	0	0	0	0
POST JOINT	ENABLE	ENABLE	ENABLE	ENABLE	ENABLE	ENABLE	ENABLE	ENABLE
POST JOINT RX	15	15	15	15	15	15	15	15
POST JOINT DELAY (SECS.)	15	15	15	15	15	15	15	15
POSITIVE START	DISABLE	DISABLE	DISABLE	DISABLE	DISABLE	DISABLE	DISABLE	DISABLE
POSITIVE START RX	0	0	0	0	0	0	0	0
POSITIVE START ACTIVE TIME (MIN.)	0	0	0	0	0	0	0	0
AUX RECOVERY DELAY (SECS.)	0		0		0		0	
CWE-WT	80		80		80		80	

NOTE:
THESE ARE DEFAULT VALUES. FIELD ASSIGNABLE.

ALL NEW

REVISED 03-01-13

DESIGNED 04-01-12
BROOKFIELD SUB PTC SEG 1
TCS/BNSF SEQ.# 49076

12-09-15 SEQ:55643 PH:
CHANGE FREQ MP 191.45
DES: XRL / PJV COR: /

BURLINGTON NORTHERN SANTA FE RAILWAY

UNIT "A" XP4 PROGRAM CONFIGURATION
CROSSING REMOTE BUSHNELL, IL

LS 0011 MP 0191.45 SH 06 OF 21

RED = IN YELLOW = OUT BLUE = IN GREY = OUT

PLAN MUST NOT BE MODIFIED WITHOUT APPROVAL OF SIGNAL ENGINEERING COPYRIGHT 2015 BNSF RAILWAY COMPANY. ALL RIGHTS RESERVED.

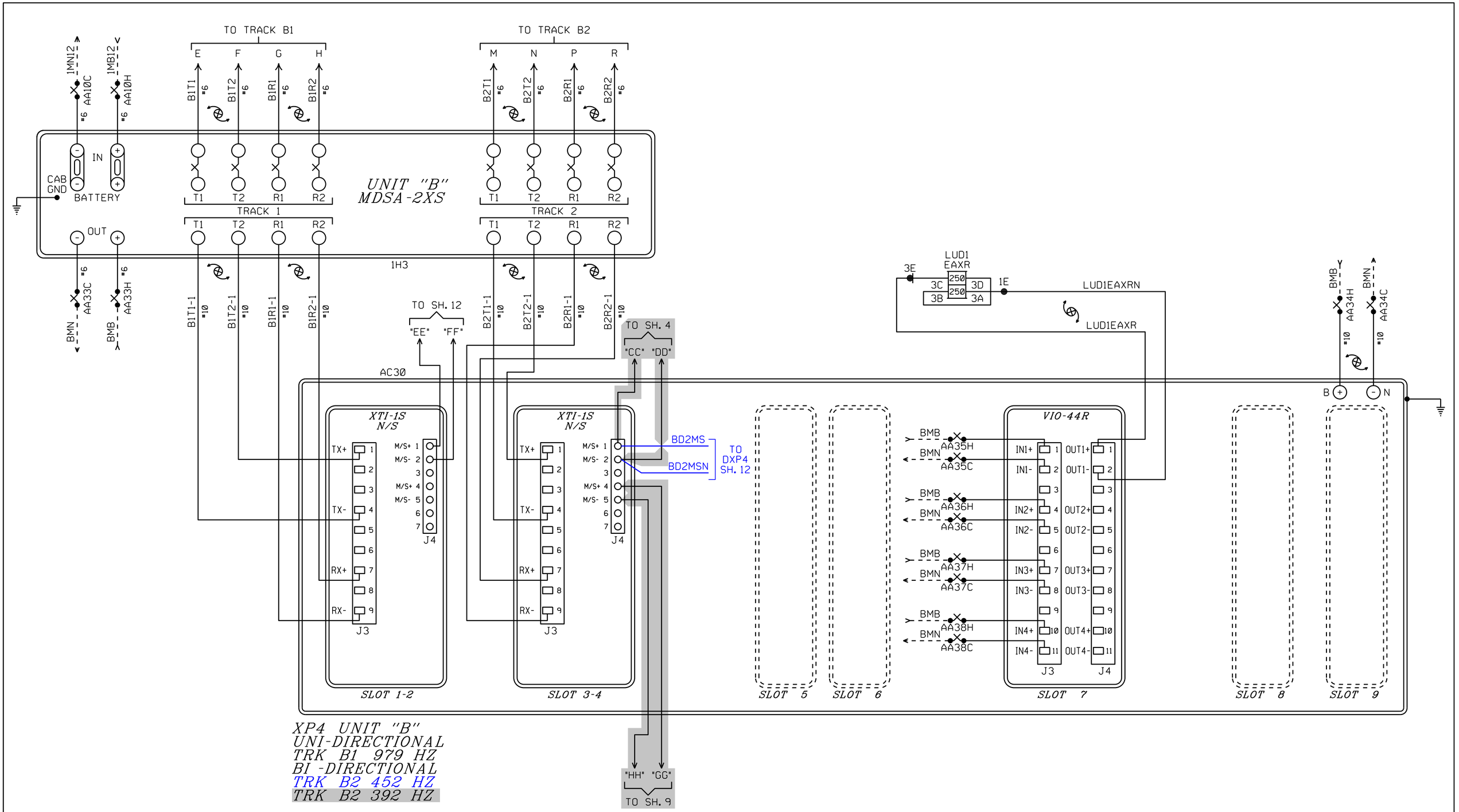

ALL NEW

BURLINGTON NORTHERN SANTA FE RAILWAY	
UNIT "B" XP4 TRACK CIRCUITS CROSSING REMOTE BUSHNELL, IL	
DESIGNED 04-01-12 BROOKFIELD SUB PTC SEG 1 TCS/BNSF SEQ.# 49076	12-09-15 SEQ:55643 PH: CHANGE FREQ MP 191.45 DES: XRL / PJV COR: /
LS 0011	MP 0191.45
SH 07 OF 21	

BLUE = IN GREY = OUT

PLAN MUST NOT BE MODIFIED WITHOUT APPROVAL OF SIGNAL ENGINEERING COPYRIGHT 2015 BNSF RAILWAY COMPANY. ALL RIGHTS RESERVED.

APPLICATION SOFTWARE INFO

TYPE	REDUNDANT
NAME	2t_c9_1₁
CONFIGURATION	9
CHECKSUM	1DF2
CRC	4D7C

CHASSIS ID

DIP NO.	1	2	3	4	5	6	7	8
SHUNT	X	X	X	X	X	I	I	I
CHASSIS ID DECIMAL	7							

NOTE: I = TAB INTACT
X = TAB PUNCHED OUT

VITAL I/O

SLOT 7 INPUTS

INPUT #	NAME	FUNCTION
INPUT 1	S7_IN1_AUX1	AUX/CWE For MDR1
INPUT 2	S7_IN2_AUX2	AUX/CWE For MDR2
INPUT 3	S7_IN3_AUX3	AUX/CWE For MDR3
INPUT 4	S7_IN4_ISL1	ISL 1 INPUT CONTROL

SLOT 7 OUTPUTS

OUTPUT #	NAME	FUNCTION
OUTPUT 1	S7_OUT1_MDR1	RELAY OUTPUT-MDR1
OUTPUT 2	S7_OUT2_MDR2	RELAY OUTPUT-MDR2
OUTPUT 3	S7_OUT3_MDR3	RELAY OUTPUT-MDR3
OUTPUT 4	S7_OUT4_MDR4	RELAY OUTPUT-MDR4

PROGRAM VERSION 5.9 OR LATER

*=FIELD ADJUSTMENT TO BE MADE ACCORDING TO THE XP4 INSTRUCTION MANUAL 100323-010 AH0 & SUPPLEMENTS.

BASIC TRACK SETUP

ADJUSTMENT NAME	TRACK 1	TRACK 2
ISLAND ASSIGNMENT	ISL1_ASSIGN	ISL2_ASSIGN
APPROACH FREQUENCY (HZ)	979 HZ	452 HZ
APPROACH LENGTH (FEET)	279	2474
MASTER/SLAVE	MASTER	MASTER
UNI/BI	UNI	BI
RX ADJUST	100	100
TCA (TRANSMITTER CHECK)	*	*
LIA (LUMPED IMPEDANCE)	*	*
ADVANCED APR. CAL	INACTIVE	INACTIVE
NBS COMP RX	*	*
AUTO RX	ENABLE	ENABLE
MD TIMER ENABLE	DISABLE	DISABLE
MD TIMER DELAY (MIN.)	10	10
LOS TIME (SEC.)	16 SEC.	16 SEC.
IJ-LOS TIME (SEC.)	5 SEC.	5 SEC.
FALSE SHUNT ENABLE	DISABLE	DISABLE
FALSE SHUNT RX	0	0
FALSE SHUNT DELAY (MIN.)	10	10
APPROACH RELEASE ENABLE	DISABLE	DISABLE
APPROACH RELEASE RX	0	0
APPROACH RELEASE DELAY (MIN.)	10	10
NRML_SHRT_VRYSHRT	NRML	NRML

392 HZ

ISLAND SETUP

TRACK #	TRACK 1	TRACK 2
FREQUENCY (HZ)	0 HZ	0 HZ
ISLAND ENABLE	DISABLE	DISABLE
FAULT DELAY	NA	NA
LOS COUNT (SEC.)	NA	NA

MAINTENANCE MENU

TRACK #	TRACK 1	TRACK 2
ENABLE/DISABLE	ENABLE	ENABLE
DISABLE TIMEOUT	*	*
BALLAST COMP.	*	*
PHASE COMP.	*	*

NOTE: DL = DEFAULT LEVEL
NA = NON APPLICABLE

MDR SETUP FOR SLOT 7

MDR #	MDR 1		MDR 2		MDR 3		MDR 4	
WARNING TIME (SECS.)	36		99		99		99	
CONSTANT WARNING (CW) OR MOTION DETECTOR (MD)	CW		MD		MD		MD	
TRACK ASSIGN	1	2	ASSIGNABLE	ASSIGNABLE	ASSIGNABLE	ASSIGNABLE	ASSIGNABLE	ASSIGNABLE
TRACK OFFSET DISTANCE (FEET)	198 205	477 484	0	0	0	0	0	0
MD RESTART RX	*0	*0	*0	*0	*0	*0	*0	*0
SUDDEN SHUNT ZONE RX	0	0	0	0	0	0	0	0
POST JOINT	ENABLE	ENABLE	ENABLE	ENABLE	ENABLE	ENABLE	ENABLE	ENABLE
POST JOINT RX	15	15	15	15	15	15	15	15
POST JOINT DELAY (SECS.)	15	15	15	15	15	15	15	15
POSITIVE START	DISABLE	DISABLE	DISABLE	DISABLE	DISABLE	DISABLE	DISABLE	DISABLE
POSITIVE START RX	0	0	0	0	0	0	0	0
POSITIVE START ACTIVE TIME (MIN.)	0	0	0	0	0	0	0	0
AUX RECOVERY DELAY (SECS.)	0		0		0		0	
CWE-WT	80		80		80		80	

NOTE:
THESE ARE DEFAULT VALUES. FIELD ASSIGNABLE.

ALL NEW

DESIGNED 04-01-12
BROOKFIELD SUB PTC SEG 1
TCS/BNSF SEQ.# 49076

DESIGNED 11-06-15
UPGRADE XING M.P. 191.52
XRL/PJV SEQ.# 55643

12-09-15 SEQ:55643 PH:
CHANGE FREQ MP 191.45
DES: XRL / PJV COR: /

BURLINGTON NORTHERN SANTA FE RAILWAY

UNIT "B" XP4 PROGRAM CONFIGURATION
CROSSING REMOTE BUSHNELL, IL

LS 0011 MP 0191.45 SH 08 OF 21

GREEN = IN BROWN = OUT BLUE = IN GREY = OUT

PLAN MUST NOT BE MODIFIED WITHOUT APPROVAL OF SIGNAL ENGINEERING COPYRIGHT 2015 BNSF RAILWAY COMPANY. ALL RIGHTS RESERVED.

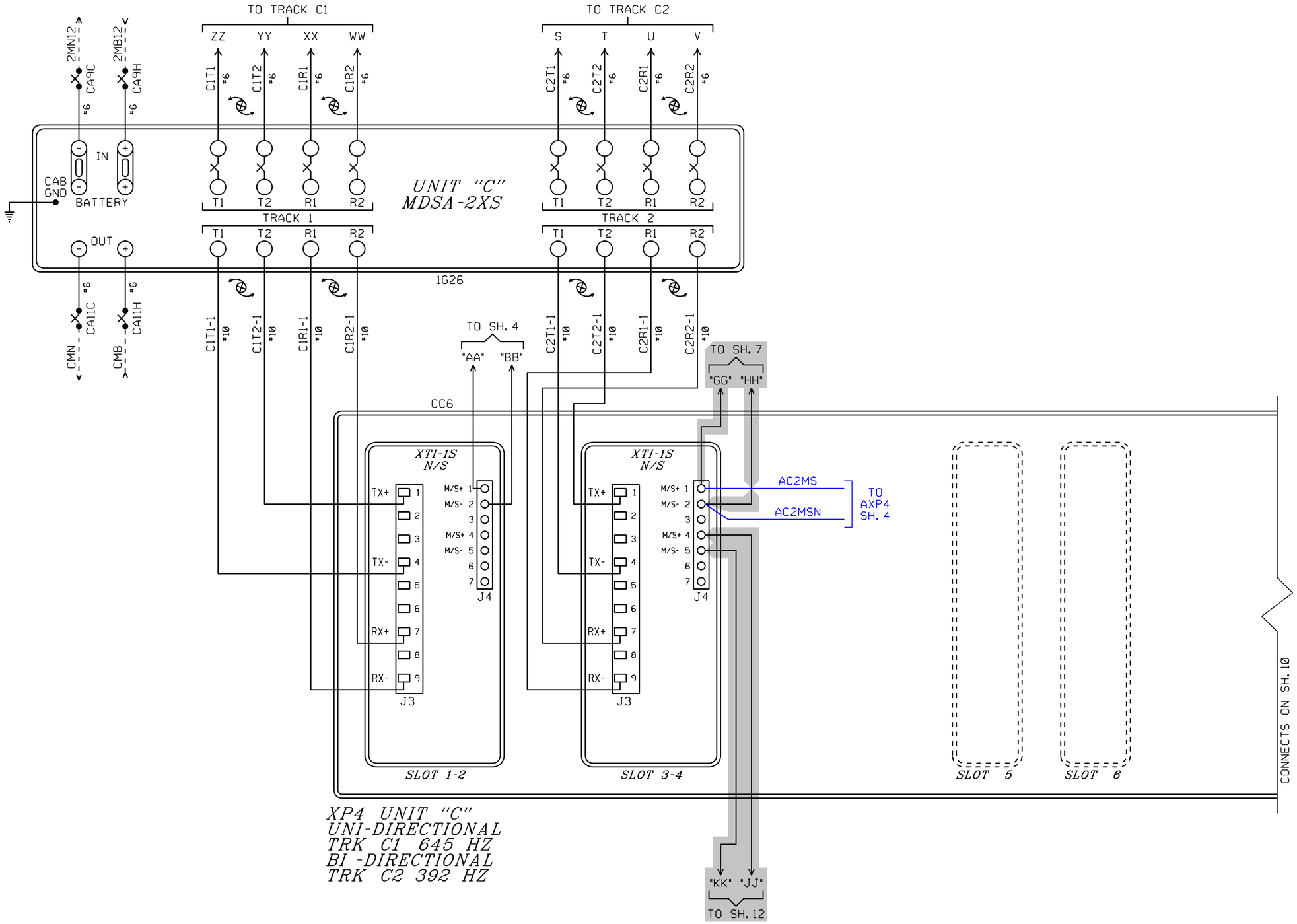

ALL NEW

BURLINGTON NORTHERN SANTA FE RAILWAY

UNIT "C" XP4 TRACK CIRCUITS
CROSSING REMOTE BUSHNELL, IL

DESIGNED 04-01-12
BROOKFIELD SUB PTC SEG 1
TCS/BNSF SEQ.# 49076

12-09-15 SEQ:55643 PH:
CHANGE FREQ MP 191.45
DES: XRL / PJV COR: /

LS 0011 MP 0191.45 SH 09 OF 21

BLUE = IN GREY = OUT

PLAN MUST NOT BE MODIFIED WITHOUT APPROVAL OF SIGNAL ENGINEERING COPYRIGHT 2015 BNSF RAILWAY COMPANY. ALL RIGHTS RESERVED.

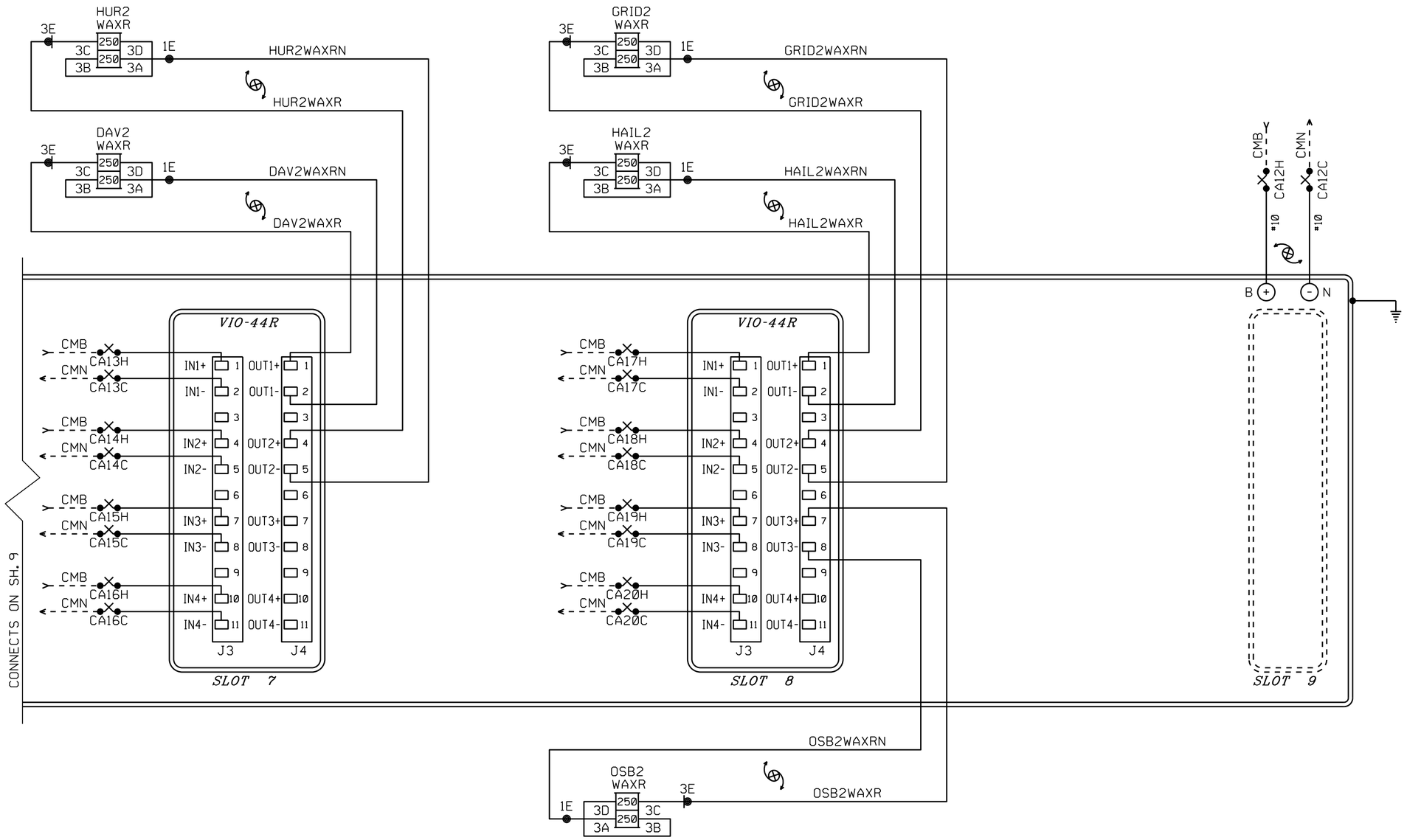

ALL NEW

BURLINGTON NORTHERN SANTA FE RAILWAY			
UNIT "C" XP4 TRACK CIRCUITS CROSSING REMOTE BUSHNELL, IL			
DESIGNED 04-01-12 BROOKFIELD SUB PTC SEG 1 TCS/BNSF SEQ.# 49076	LS 0011	MP 0191.45	SH 10 OF 21

PLAN MUST NOT BE MODIFIED WITHOUT APPROVAL OF SIGNAL ENGINEERING COPYRIGHT 2015 BNSF RAILWAY COMPANY. ALL RIGHTS RESERVED.

APPLICATION SOFTWARE INFO

TYPE	REDUNDANT
NAME	2t_c9_2₁
CONFIGURATION	9
CHECKSUM	B16E
CRC	B5DB

CHASSIS ID

DIP NO.	1	2	3	4	5	6	7	8
SHUNT	X	X	X	I	X	X	X	X
CHASSIS ID DECIMAL	16							

NOTE: I = TAB INTACT
X = TAB PUNCHED OUT

VITAL I/O SLOT 7 INPUTS

INPUT #	NAME	FUNCTION
INPUT 1	S7_IN1_AUX1	AUX/CWE For MDR1
INPUT 2	S7_IN2_AUX2	AUX/CWE For MDR2
INPUT 3	S7_IN3_AUX3	AUX/CWE For MDR3
INPUT 4	S7_IN4_ISL1	ISL 1 INPUT CONTROL

SLOT 7 OUTPUTS

OUTPUT #	NAME	FUNCTION
OUTPUT 1	S7_OUT1_MDR1	RELAY OUTPUT-MDR1
OUTPUT 2	S7_OUT2_MDR2	RELAY OUTPUT-MDR2
OUTPUT 3	S7_OUT3_MDR3	RELAY OUTPUT-MDR3
OUTPUT 4	S7_OUT4_MDR4	RELAY OUTPUT-MDR4

VITAL I/O SLOT 8 INPUTS

INPUT #	NAME	FUNCTION
INPUT 1	S8_IN1_AUX5	AUX/CWE For MDR5
INPUT 2	S8_IN2_AUX6	AUX/CWE For MDR6
INPUT 3	S8_IN3_AUX7	AUX/CWE For MDR7
INPUT 4	S8_IN4_AUX8	AUX/CWE For MDR8

SLOT 8 OUTPUTS

OUTPUT #	NAME	FUNCTION
OUTPUT 1	S8_OUT1_MDR5	RELAY OUTPUT-MDR5
OUTPUT 2	S8_OUT2_MDR6	RELAY OUTPUT-MDR6
OUTPUT 3	S8_OUT3_MDR7	RELAY OUTPUT-MDR7
OUTPUT 4	S8_OUT4_MDR8	RELAY OUTPUT-MDR8

PROGRAM VERSION 5.9 OR LATER

*=FIELD ADJUSTMENT TO BE MADE ACCORDING TO THE XP4 INSTRUCTION MANUAL 100323-010 AH0 & SUPPLEMENTS.

BASIC TRACK SETUP

ADJUSTMENT NAME	TRACK 1	TRACK 2
ISLAND ASSIGNMENT	ISL1_ASSIGN	ISL2_ASSIGN
APPROACH FREQUENCY (HZ)	645 HZ	392 HZ
APPROACH LENGTH (FEET)	279	3892
MASTER/SLAVE	SLAVE	SLAVE
UNI/BI	UNI	BI
RX ADJUST	100	100
TCA (TRANSMITTER CHECK)	*	*
LIA (LUMPED IMPEDANCE)	*	*
ADVANCED APR. CAL	INACTIVE	INACTIVE
NBS COMP RX	*	*
AUTO RX	ENABLE	ENABLE
MD TIMER ENABLE	DISABLE	DISABLE
MD TIMER DELAY (MIN.)	10	10
LOS TIME (SEC.)	16 SEC.	16 SEC.
IJ-LOS TIME (SEC.)	5 SEC.	5 SEC.
FALSE SHUNT ENABLE	DISABLE	DISABLE
FALSE SHUNT RX	0	0
FALSE SHUNT DELAY (MIN.)	10	10
APPROACH RELEASE ENABLE	DISABLE	DISABLE
APPROACH RELEASE RX	0	0
APPROACH RELEASE DELAY (MIN.)	10	10
NRML_SHRT_VRYSHRT	NRML	NRML

ISLAND SETUP

TRACK #	TRACK 1	TRACK 2
FREQUENCY (HZ)	0 HZ	0 HZ
ISLAND ENABLE	DISABLE	DISABLE
FAULT DELAY	NA	NA
LOS COUNT (SEC.)	NA	NA

MAINTENANCE MENU

TRACK #	TRACK 1	TRACK 2
ENABLE/DISABLE	ENABLE	ENABLE
DISABLE TIMEOUT	*	*
BALLAST COMP.	*	*
PHASE COMP.	*	*

NOTE: DL = DEFAULT LEVEL
NA = NON APPLICABLE

MDR SETUP FOR SLOT 8

MDR #	MDR 5		MDR 6		MDR 7		MDR 8	
WARNING TIME (SECS.)	31		31		31		99	
CONSTANT WARNING (CW) OR MOTION DETECTOR (MD)	CW		CW		CW		MD	
TRACK ASSIGN	1	2	1	2	1	2	ASSIGNABLE	ASSIGNABLE
TRACK OFFSET DISTANCE (FEET)	1494	1773	2012	2291	3117	3396	0	0
MD RESTART RX	*0	*0	*0	*0	*0	*0	*0	*0
SUDDEN SHUNT ZONE RX	0	0	0	0	0	0	0	0
POST JOINT	ENABLE	ENABLE	ENABLE	ENABLE	ENABLE	ENABLE	ENABLE	ENABLE
POST JOINT RX	15	15	15	15	15	15	15	15
POST JOINT DELAY (SECS.)	15	15	15	15	15	15	15	15
POSITIVE START	DISABLE	DISABLE	DISABLE	DISABLE	DISABLE	DISABLE	DISABLE	DISABLE
POSITIVE START RX	0	0	0	0	0	0	0	0
POSITIVE START ACTIVE TIME (MIN.)	0	0	0	0	0	0	0	0
AUX RECOVERY DELAY (SECS.)	0		0		0		0	
CWE-WT	80		80		80		80	

3177' 3456'

NOTE:
THESE ARE DEFAULT VALUES. FIELD ASSIGNABLE.

MDR SETUP FOR SLOT 7

MDR #	MDR 1		MDR 2		MDR 3		MDR 4	
WARNING TIME (SECS.)	34		29		99		99	
CONSTANT WARNING (CW) OR MOTION DETECTOR (MD)	CW		CW		MD		MD	
TRACK ASSIGN	1	2	1	2	ASSIGNABLE	ASSIGNABLE	ASSIGNABLE	ASSIGNABLE
TRACK OFFSET DISTANCE (FEET)	232	511	1072	1351	0	0	0	0
MD RESTART RX	*0	*0	*0	*0	*0	*0	*0	*0
SUDDEN SHUNT ZONE RX	0	0	0	0	0	0	0	0
POST JOINT	ENABLE	ENABLE	ENABLE	ENABLE	ENABLE	ENABLE	ENABLE	ENABLE
POST JOINT RX	15	15	15	15	15	15	15	15
POST JOINT DELAY (SECS.)	15	15	15	15	15	15	15	15
POSITIVE START	DISABLE	DISABLE	DISABLE	DISABLE	DISABLE	DISABLE	DISABLE	DISABLE
POSITIVE START RX	0	0	0	0	0	0	0	0
POSITIVE START ACTIVE TIME (MIN.)	0	0	0	0	0	0	0	0
AUX RECOVERY DELAY (SECS.)	0		0		0		0	
CWE-WT	80		80		80		80	

NOTE:
THESE ARE DEFAULT VALUES. FIELD ASSIGNABLE.

ALL NEW
REVISED 03-01-13

DESIGNED 04-01-12
BROOKFIELD SUB PTC SEG 1
TCS/BNSF SEQ.# 49076

BURLINGTON NORTHERN SANTA FE RAILWAY

UNIT "C" XP4 PROGRAM CONFIGURATION
CROSSING REMOTE BUSHNELL, IL

LS 0011 MP 0191.45 SH 11 OF 21

RED = IN YELLOW = OUT

PLAN MUST NOT BE MODIFIED WITHOUT APPROVAL OF SIGNAL ENGINEERING COPYRIGHT 2015 BNSF RAILWAY COMPANY. ALL RIGHTS RESERVED.

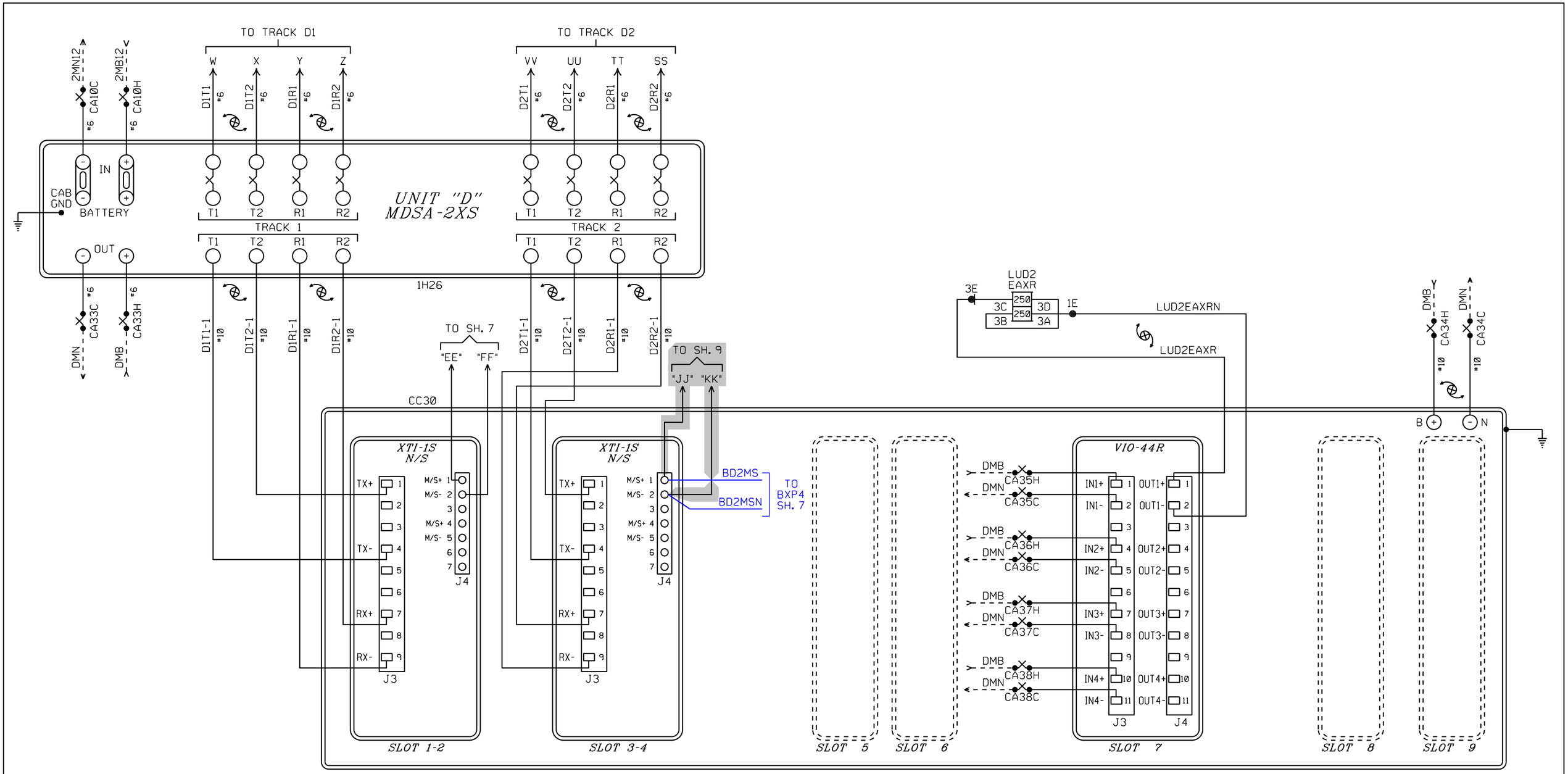

ALL NEW

BURLINGTON NORTHERN SANTA FE RAILWAY

UNIT "D" XP4 TRACK CIRCUITS
CROSSING REMOTE BUSHNELL, IL

DESIGNED 04-01-12
BROOKFIELD SUB PTC SEG 1
TCS/BNSF SEQ.# 49076

12-09-15 SEQ:55643 PH:
CHANGE FREQ MP 191.45
DES: XRL / PJV COR: /

LS 0011 MP 0191.45 SH 12 OF 21

BLUE = IN GREY = OUT

PLAN MUST NOT BE MODIFIED WITHOUT APPROVAL OF SIGNAL ENGINEERING COPYRIGHT 2015 BNSF RAILWAY COMPANY. ALL RIGHTS RESERVED.

APPLICATION SOFTWARE INFO

TYPE	REDUNDANT
NAME	2t_c9_1₁
CONFIGURATION	9
CHECKSUM	1DF2
CRC	4D7C

CHASSIS ID

DIP NO.	1	2	3	4	5	6	7	8
SHUNT	X	X	X	X	X	I	I	I
CHASSIS ID DECIMAL	7							

NOTE: I = TAB INTACT
X = TAB PUNCHED OUT

VITAL I/O

SLOT 7 INPUTS

INPUT #	NAME	FUNCTION
INPUT 1	S7_IN1_AUX1	AUX/CWE For MDR1
INPUT 2	S7_IN2_AUX2	AUX/CWE For MDR2
INPUT 3	S7_IN3_AUX3	AUX/CWE For MDR3
INPUT 4	S7_IN4_ISL1	ISL 1 INPUT CONTROL

SLOT 7 OUTPUTS

OUTPUT #	NAME	FUNCTION
OUTPUT 1	S7_OUT1_MDR1	RELAY OUTPUT-MDR1
OUTPUT 2	S7_OUT2_MDR2	RELAY OUTPUT-MDR2
OUTPUT 3	S7_OUT3_MDR3	RELAY OUTPUT-MDR3
OUTPUT 4	S7_OUT4_MDR4	RELAY OUTPUT-MDR4

PROGRAM VERSION 5.9 OR LATER

*=FIELD ADJUSTMENT TO BE MADE ACCORDING TO THE XP4 INSTRUCTION MANUAL 100323-010 AH0 & SUPPLEMENTS.

BASIC TRACK SETUP

ADJUSTMENT NAME	TRACK 1	TRACK 2
ISLAND ASSIGNMENT	ISL1_ASSIGN	ISL2_ASSIGN
APPROACH FREQUENCY (HZ)	979 HZ	452 HZ 392 HZ
APPROACH LENGTH (FEET)	279	2474
MASTER/SLAVE	SLAVE	SLAVE
UNI/BI	UNI	BI
RX ADJUST	100	100
TCA (TRANSMITTER CHECK)	*	*
LIA (LUMPED IMPEDANCE)	*	*
ADVANCED APR. CAL	INACTIVE	INACTIVE
NBS COMP RX	*	*
AUTO RX	ENABLE	ENABLE
MD TIMER ENABLE	DISABLE	DISABLE
MD TIMER DELAY (MIN.)	10	10
LOS TIME (SEC.)	16 SEC.	16 SEC.
IJ-LOS TIME (SEC.)	5 SEC.	5 SEC.
FALSE SHUNT ENABLE	DISABLE	DISABLE
FALSE SHUNT RX	0	0
FALSE SHUNT DELAY (MIN.)	10	10
APPROACH RELEASE ENABLE	DISABLE	DISABLE
APPROACH RELEASE RX	0	0
APPROACH RELEASE DELAY (MIN.)	10	10
NRML_SHRT_VRYSHRT	NRML	NRML

ISLAND SETUP

TRACK #	TRACK 1	TRACK 2
FREQUENCY (HZ)	0 HZ	0 HZ
ISLAND ENABLE	DISABLE	DISABLE
FAULT DELAY	NA	NA
LOS COUNT (SEC.)	NA	NA

MAINTENANCE MENU

TRACK #	TRACK 1	TRACK 2
ENABLE/DISABLE	ENABLE	ENABLE
DISABLE TIMEOUT	*	*
BALLAST COMP.	*	*
PHASE COMP.	*	*

NOTE: DL = DEFAULT LEVEL
NA = NON APPLICABLE

MDR SETUP FOR SLOT 7

MDR #	MDR 1		MDR 2		MDR 3		MDR 4	
WARNING TIME (SECS.)	36		99		99		99	
CONSTANT WARNING (CW) OR MOTION DETECTOR (MD)	CW		MD		MD		MD	
TRACK ASSIGN	1	2	ASSIGNABLE	ASSIGNABLE	ASSIGNABLE	ASSIGNABLE	ASSIGNABLE	ASSIGNABLE
TRACK OFFSET DISTANCE (FEET)	198 205	477 484	0	0	0	0	0	0
MD RESTART RX	*0	*0	*0	*0	*0	*0	*0	*0
SUDDEN SHUNT ZONE RX	0	0	0	0	0	0	0	0
POST JOINT	ENABLE	ENABLE	ENABLE	ENABLE	ENABLE	ENABLE	ENABLE	ENABLE
POST JOINT RX	15	15	15	15	15	15	15	15
POST JOINT DELAY (SECS.)	15	15	15	15	15	15	15	15
POSITIVE START	DISABLE	DISABLE	DISABLE	DISABLE	DISABLE	DISABLE	DISABLE	DISABLE
POSITIVE START RX	0	0	0	0	0	0	0	0
POSITIVE START ACTIVE TIME (MIN.)	0	0	0	0	0	0	0	0
AUX RECOVERY DELAY (SECS.)	0		0		0		0	
CWE-WT	80		80		80		80	

NOTE:
THESE ARE DEFAULT VALUES. FIELD ASSIGNABLE.

ALL NEW

DESIGNED 04-01-12
BROOKFIELD SUB PTC SEG 1
TCS/BNSF SEQ.# 49076

DESIGNED 11-06-15
UPGRADE XING M.P. 191.52
XRL/PJV SEQ.# 55643

12-09-15 SEQ:55643 PH:
CHANGE FREQ MP 191.45
DES: XRL/PJV COR: /

BURLINGTON NORTHERN SANTA FE RAILWAY

UNIT "D" XP4 PROGRAM CONFIGURATION
CROSSING REMOTE BUSHNELL, IL

LS 0011 MP 0191.45 SH 13 OF 21

GREEN = IN BROWN = OUT BLUE = IN GREY = OUT

PLAN MUST NOT BE MODIFIED WITHOUT APPROVAL OF SIGNAL ENGINEERING COPYRIGHT 2015 BNSF RAILWAY COMPANY. ALL RIGHTS RESERVED.

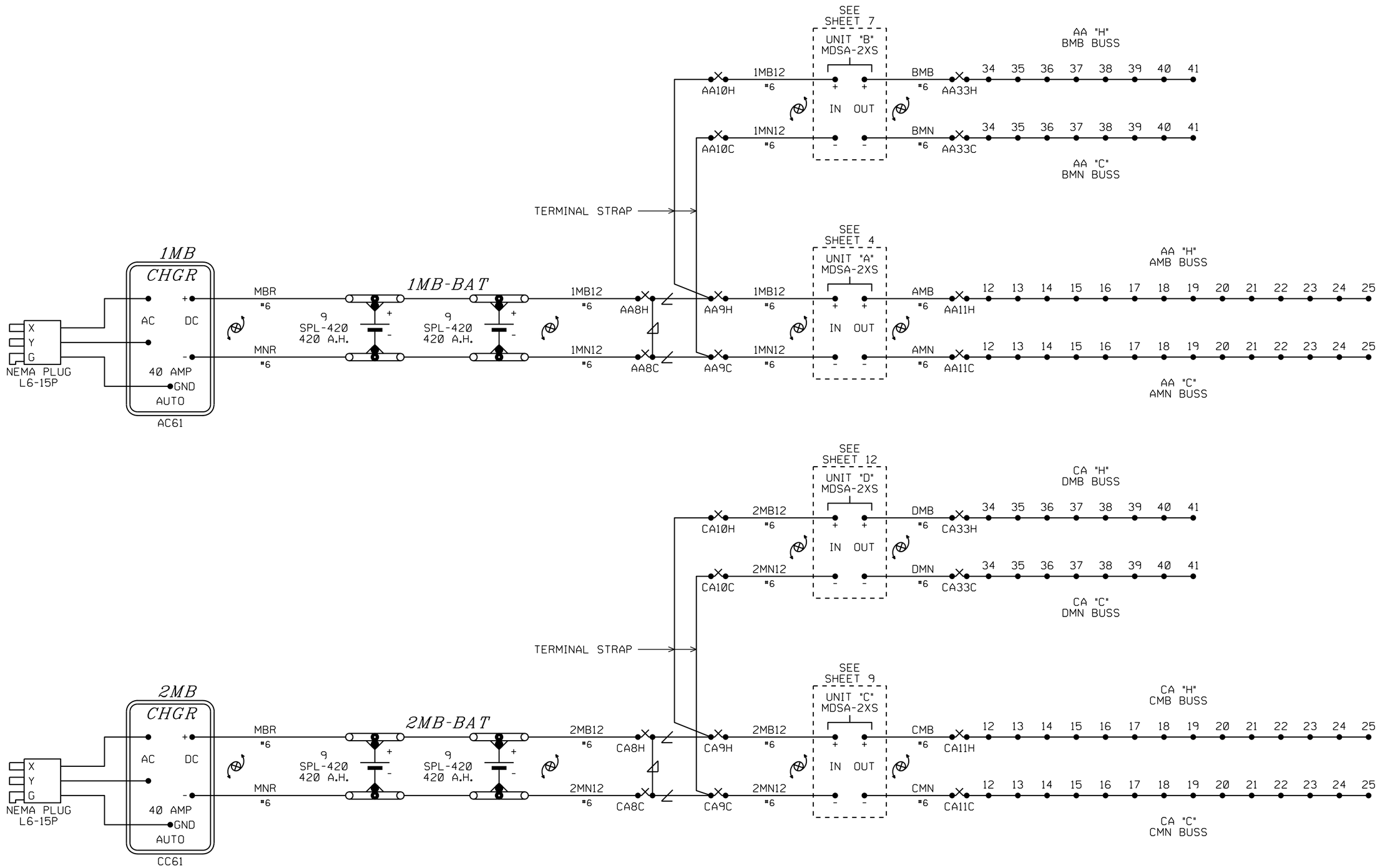

ALL NEW

DESIGNED 04-01-12
BROOKFIELD SUB PTC SEG 1
TCS/BNSF SEQ.# 49076

BURLINGTON NORTHERN SANTA FE RAILWAY

BATTERY CIRCUITS
CROSSING REMOTE BUSHNELL, IL

LS 0011 MP 0191.45 SH 14 OF 21

PLAN MUST NOT BE MODIFIED WITHOUT APPROVAL OF SIGNAL ENGINEERING COPYRIGHT 2015 BNSF RAILWAY COMPANY. ALL RIGHTS RESERVED.

SIDE D

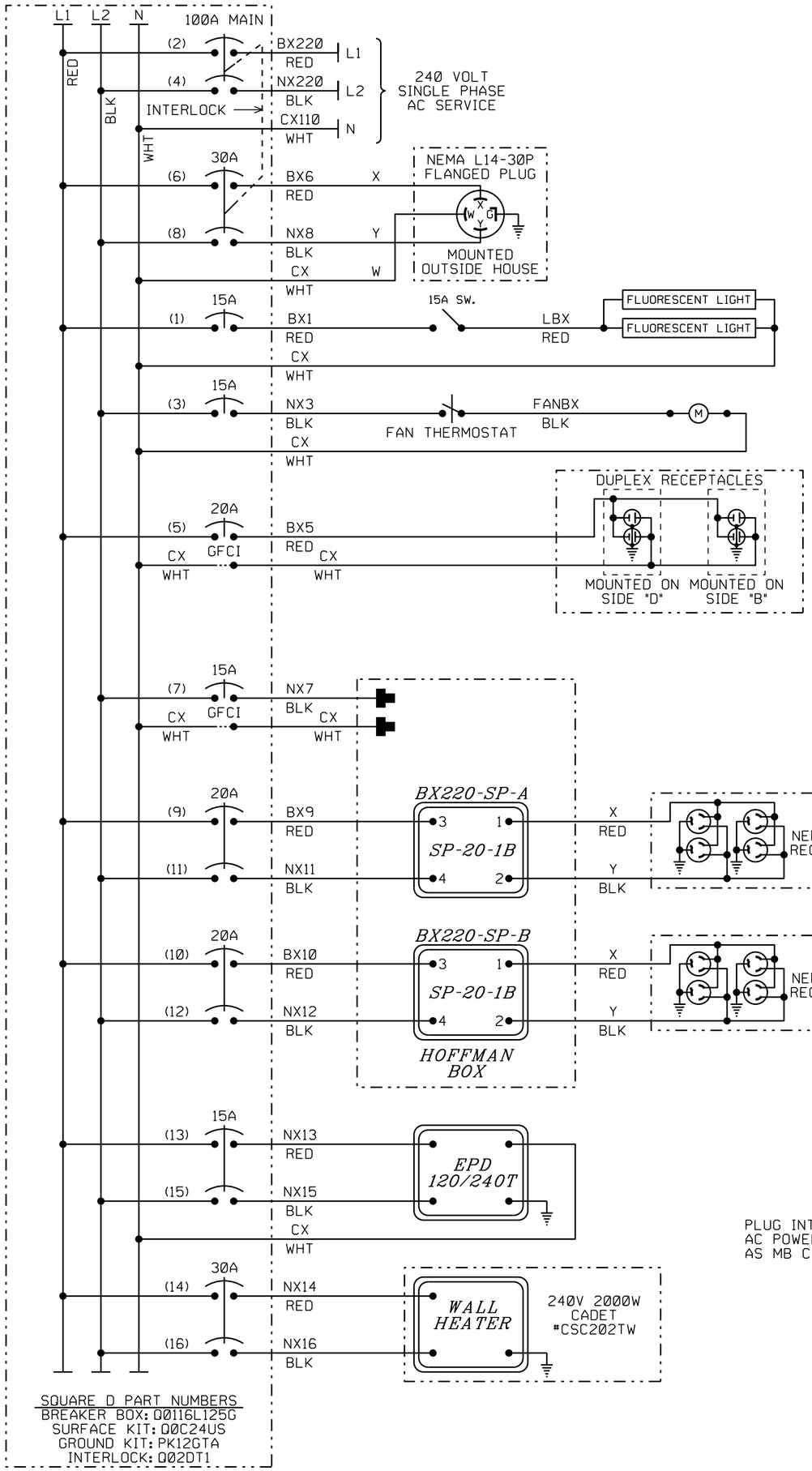

NOTES:

1. USE THE FOLLOWING COLOR CODE:
   GRN - GREEN - SAFETY EQUIPMENT GROUND
   WHT - WHITE - CX110 (NEUTRAL)
   BLK - BLACK - NX220 (L2)
   RED - RED - BX220 (L1)
   EXCEPTIONS TO THE ABOVE COLOR CODE ARE THE PRE-WIRED, SEALED ARRESTOR UNITS MOUNTED ON THE BREAKER BOX WHICH HAVE TWO BLACK AND ONE WHITE WIRE EACH.
2. ▶ = WIRE NUT
3. MINIMUM WIRE SIZE
   10 AMP - NO. 14 AWG THHN OR THWN SOLID
   20 AMP - NO. 12 AWG THHN OR THWN SOLID
   30 AMP - NO. 10 AWG THHN OR THWN SOLID
4. GROUND FAULT INTERRUPT (GFCI) MUST BE USED ON ALL CIRCUITS SERVING CONVENIENCE OUTLETS AND ANY EQUIPMENT OUTSIDE THE BUNGALOW. RECEPTACLE MOUNTED GFCI MAY BE USED INSTEAD OF BREAKER TYPE.
5. ISOLATION TRANSFORMER IF INSTALLED.
   JUMPER WIRES BLK/YEL TO BLK/GRN WITH CX (WHT)
   JUMPER WIRES BLK TO BLK/RED WITH NX4 (BLK)
6. ALL GROUND WIRES RUN TO BREAKER BOX GROUND BUSS

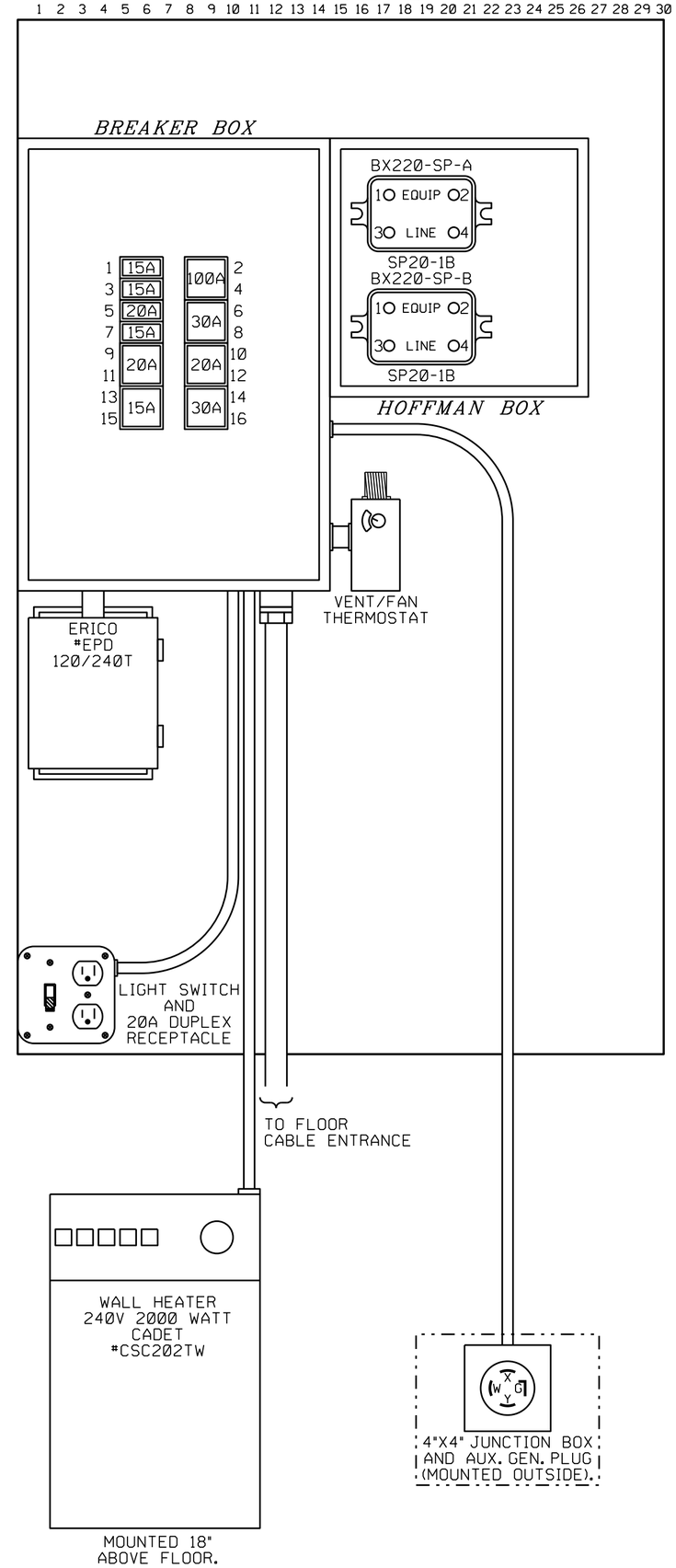

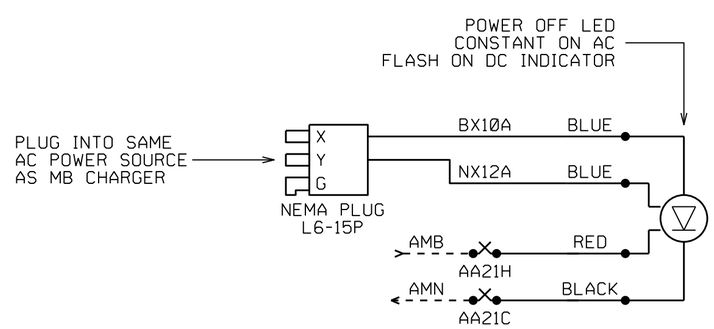

ALL NEW
REVISED 03-01-13

DESIGNED 04-01-12
BROOKFIELD SUB PTC SEG 1
TCS/BNSF SEQ.# 49076

BURLINGTON NORTHERN SANTA FE RAILWAY

POWER DISTRIBUTION CIRCUITS
CROSSING REMOTE BUSHNELL, IL

LS 0011 MP 0191.45 SH 15 OF 21

0011_0191.45_15c.dgn December 09, 2015

PLAN MUST NOT BE MODIFIED WITHOUT APPROVAL OF SIGNAL ENGINEERING COPYRIGHT 2015 BNSF RAILWAY COMPANY. ALL RIGHTS RESERVED.

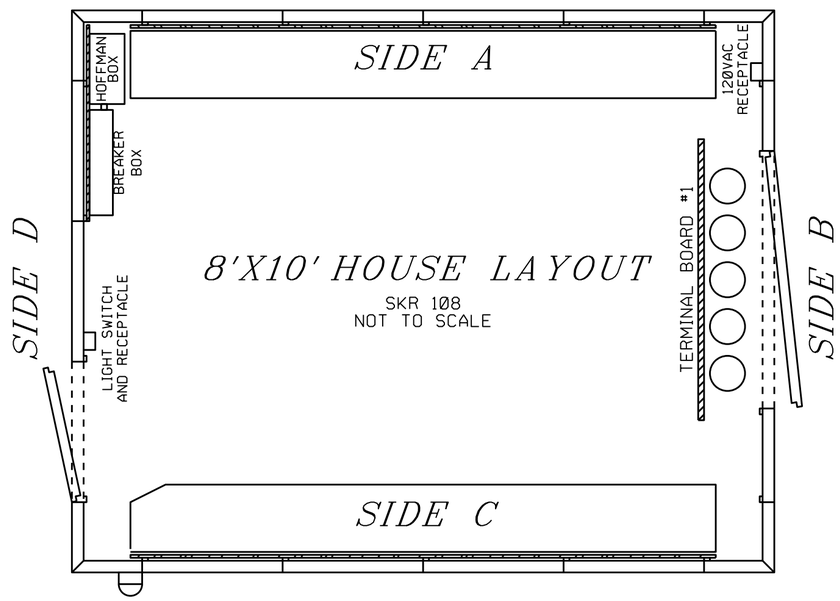

NOTE: INSTALL POWER OFF INDICATOR LIGHT ON TRACK SIDE AND NEAR EAVE OF HOUSE.

ALL NEW

DESIGNED 04-01-12
BROOKFIELD SUB PTC SEG 1
TCS/BNSF SEQ.# 49076

BURLINGTON NORTHERN SANTA FE RAILWAY

HOUSE LAYOUT
CROSSING REMOTE BUSHNELL, IL

LS 0011 MP 0191.45 SH 16 OF 21

0011_0191.45_16c.dgn December 09, 2015

PLAN MUST NOT BE MODIFIED WITHOUT APPROVAL OF SIGNAL ENGINEERING COPYRIGHT 2015 BNSF RAILWAY COMPANY. ALL RIGHTS RESERVED.

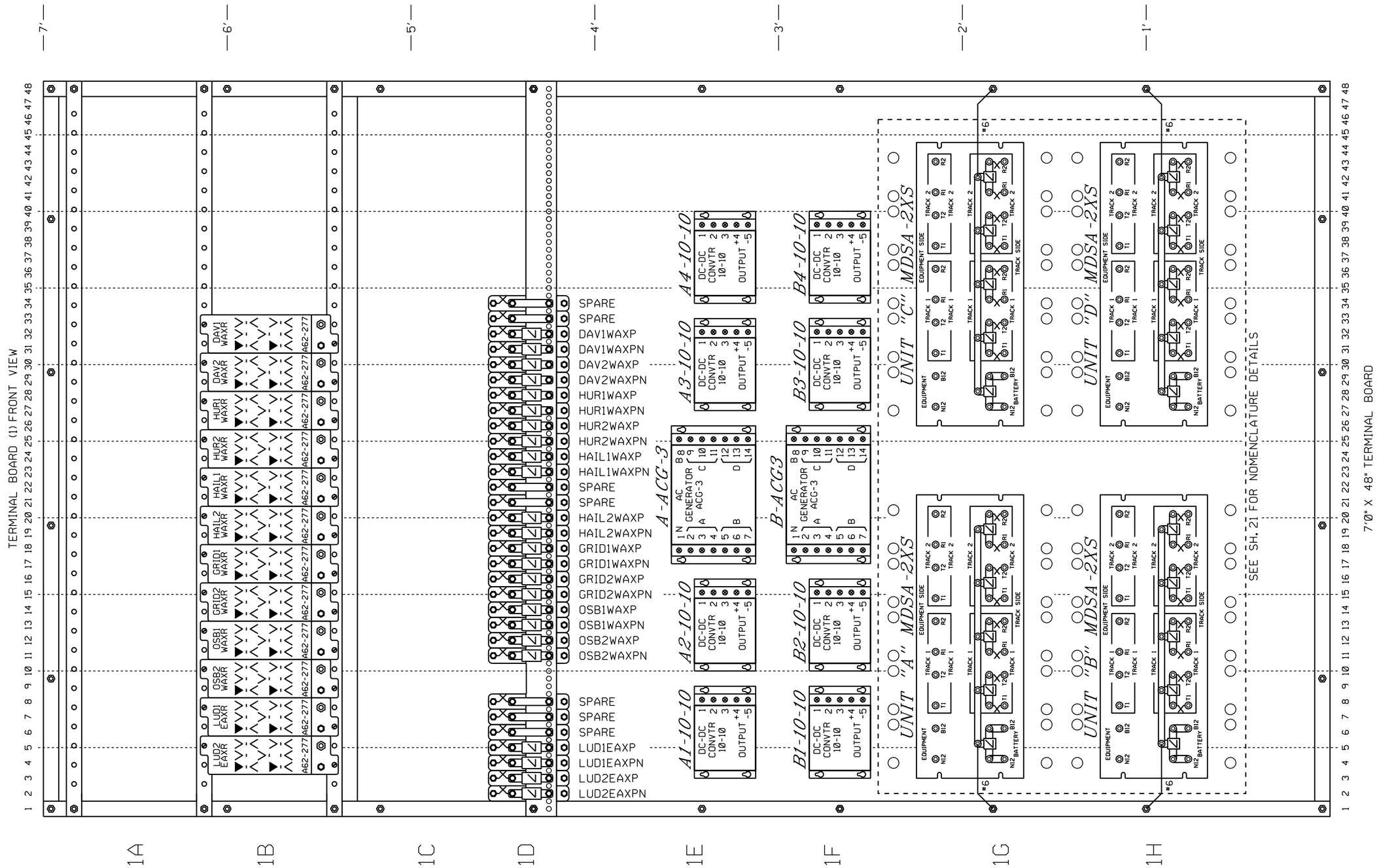

RELAY CROSS REFERENCE

GRS	SAFETRAN
A62-277	400004

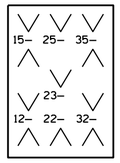

A62-277

▼ = CONTACT USED

V = CONTACT NOT USED

ALL NEW

DESIGNED 04-01-12
BROOKFIELD SUB PTC SEG 1
TCS/BNSF SEQ.# 49076

BURLINGTON NORTHERN SANTA FE RAILWAY

TERMINAL BOARD #1 LAYOUT (FRONT)
CROSSING REMOTE BUSHNELL, IL

LS 0011 MP 0191.45 SH 17 OF 21

0011_0191.45_17c.dgn December 09, 2015

PLAN MUST NOT BE MODIFIED WITHOUT APPROVAL OF SIGNAL ENGINEERING COPYRIGHT 2015 BNSF RAILWAY COMPANY. ALL RIGHTS RESERVED.

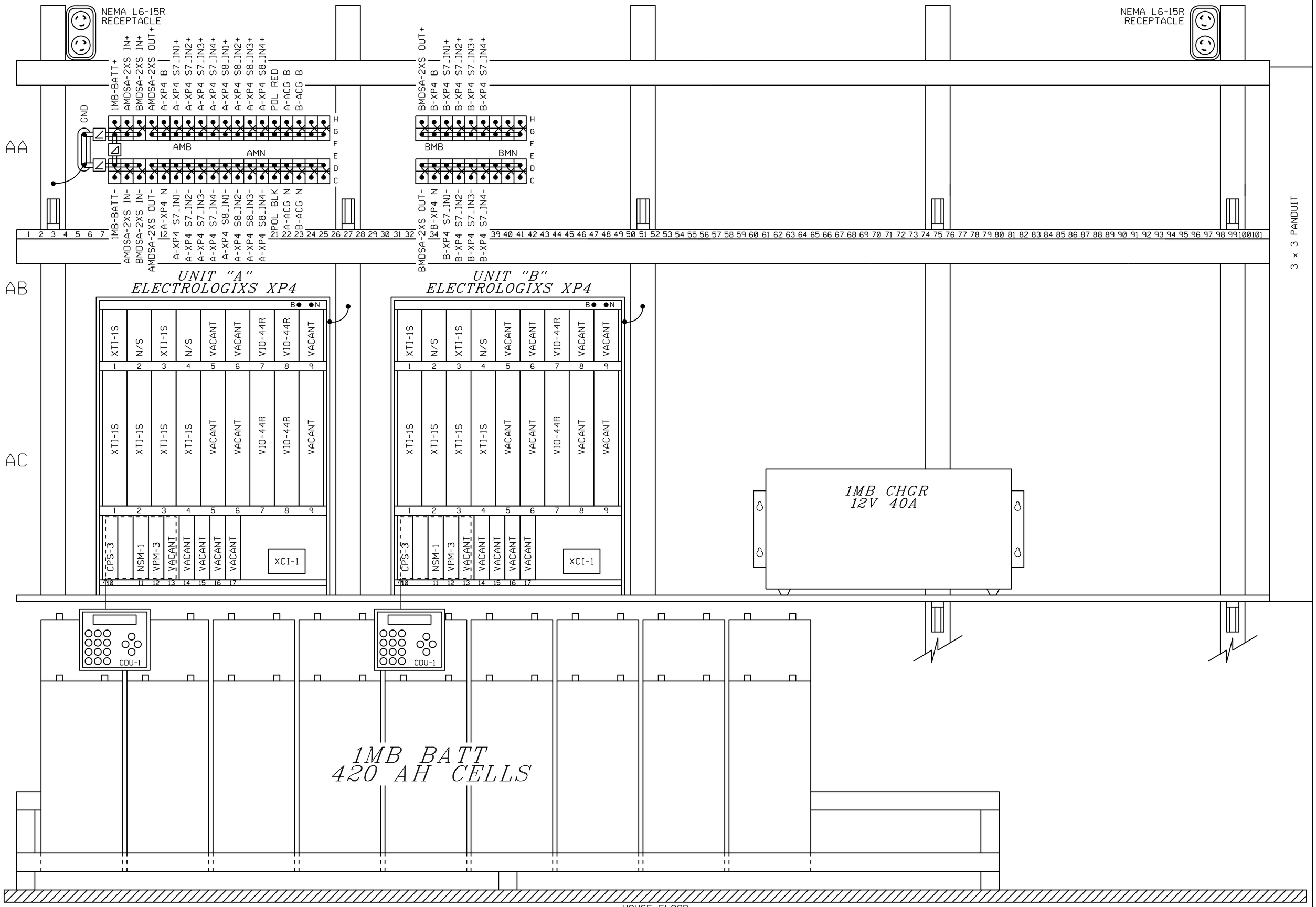

SIDE A

ALL NEW

DESIGNED 04-01-12
BROOKFIELD SUB PTC SEG 1
TCS/BNSF SEQ.# 49076

BURLINGTON NORTHERN SANTA FE RAILWAY

SIDE "A" SHELF LAYOUT
CROSSING REMOTE BUSHNELL, IL

LS 0011 MP 0191.45 SH 18 OF 21

PLAN MUST NOT BE MODIFIED WITHOUT APPROVAL OF SIGNAL ENGINEERING COPYRIGHT 2015 BNSF RAILWAY COMPANY. ALL RIGHTS RESERVED.

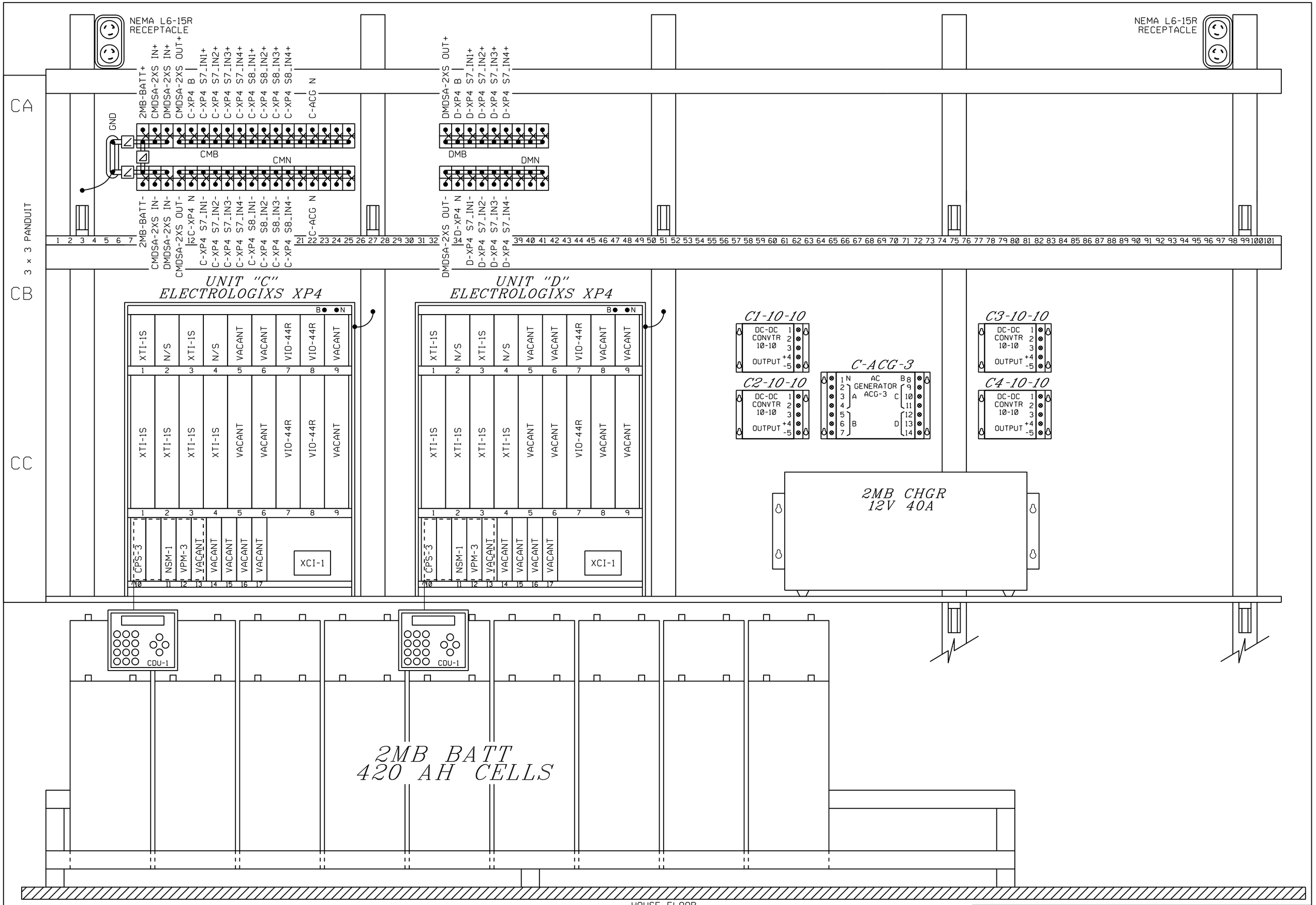

SIDE C

ALL NEW

DESIGNED 04-01-12
BROOKFIELD SUB PTC SEG 1
TCS/BNSF SEQ.# 49076

BURLINGTON NORTHERN SANTA FE RAILWAY

SIDE "C" SHELF LAYOUT
CROSSING REMOTE BUSHNELL, IL

LS 0011 MP 0191.45 SH 19 OF 21

PLAN MUST NOT BE MODIFIED WITHOUT APPROVAL OF SIGNAL ENGINEERING COPYRIGHT 2015 BNSF RAILWAY COMPANY. ALL RIGHTS RESERVED.

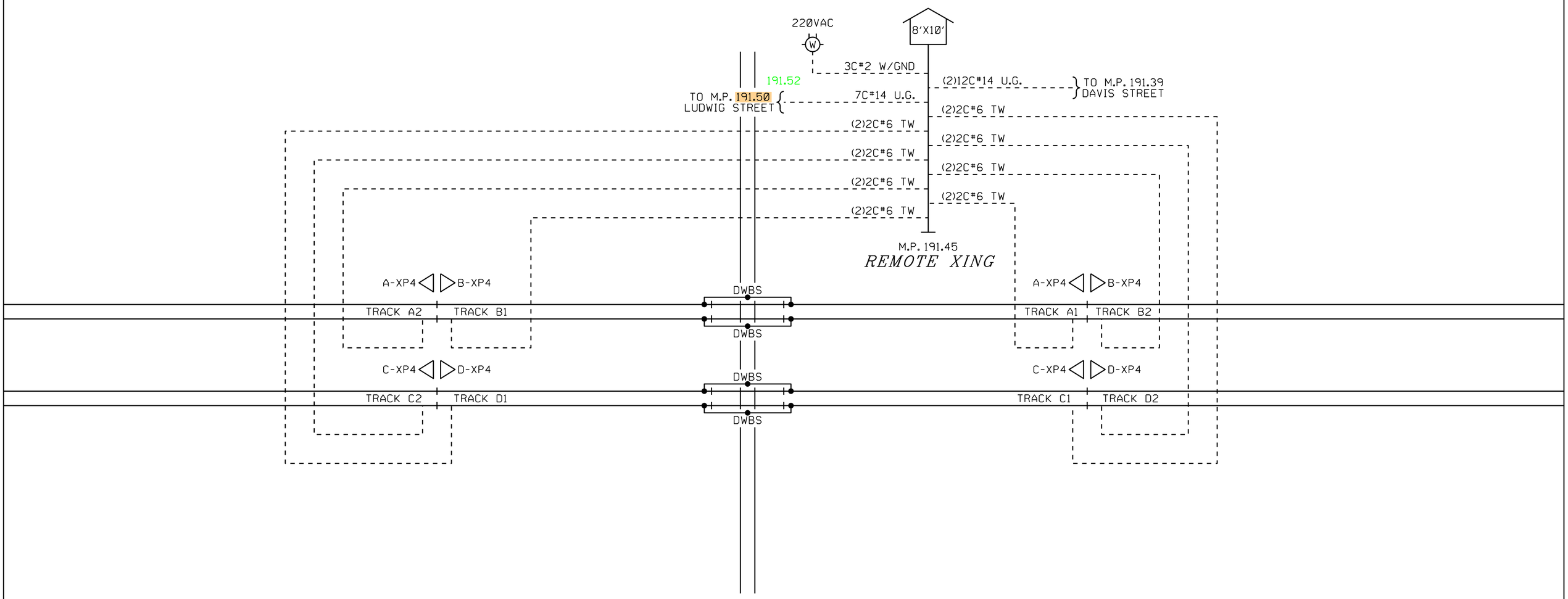

ALL NEW

						DESIGNED 04-01-12 BROOKFIELD SUB PTC SEG 1 TCS/BNSF SED.# 49076	DESIGNED 11-06-15 UPGRADE XING M.P. 191.52 XRL/PJV SED.# 55643	

BURLINGTON NORTHERN SANTA FE RAILWAY

CABLE LAYOUT
CROSSING REMOTE BUSHNELL, IL

LS 0011 MP 0191.45 SH 20 OF 21

0011_0191.45_20c.dgn December 09, 2015

GREEN = IN BROWN = OUT

PLAN MUST NOT BE MODIFIED WITHOUT APPROVAL OF SIGNAL ENGINEERING COPYRIGHT 2015 BNSF RAILWAY COMPANY. ALL RIGHTS RESERVED.

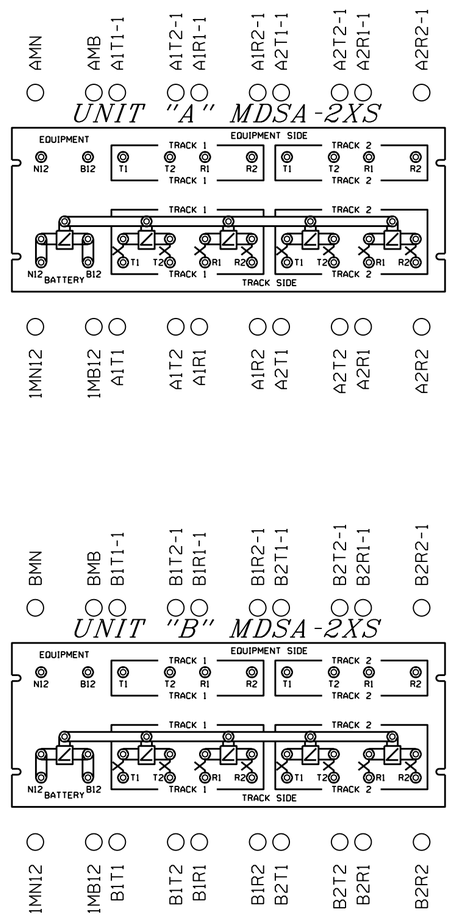

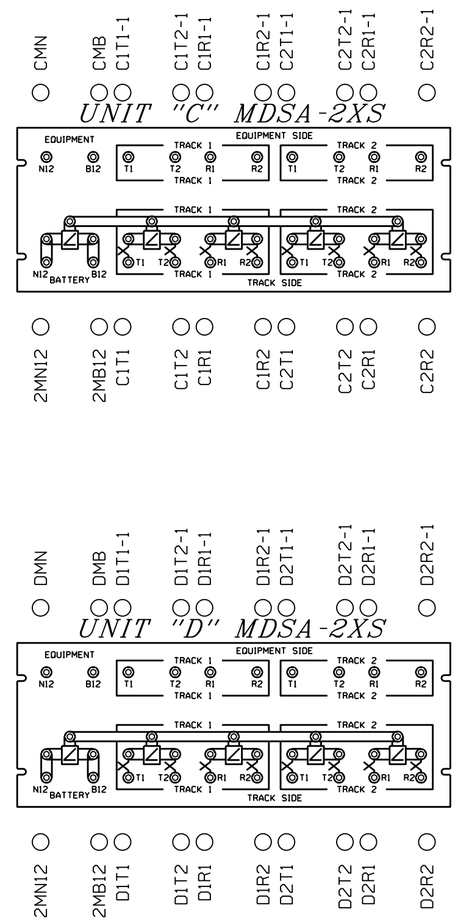

ALL NEW

DESIGNED 04-01-12
BROOKFIELD SUB PTC SEG 1
TCS/BNSF SEQ.# 49076

BURLINGTON NORTHERN SANTA FE RAILWAY

MDSA-2XS NOMENCLATURE
CROSSING REMOTE BUSHNELL, IL

LS	MP	SH
0011	0191.45	21 OF 21

0011_0191.45_21c.dgn December 09, 2015