BARCLAY BROTHERS 8-78

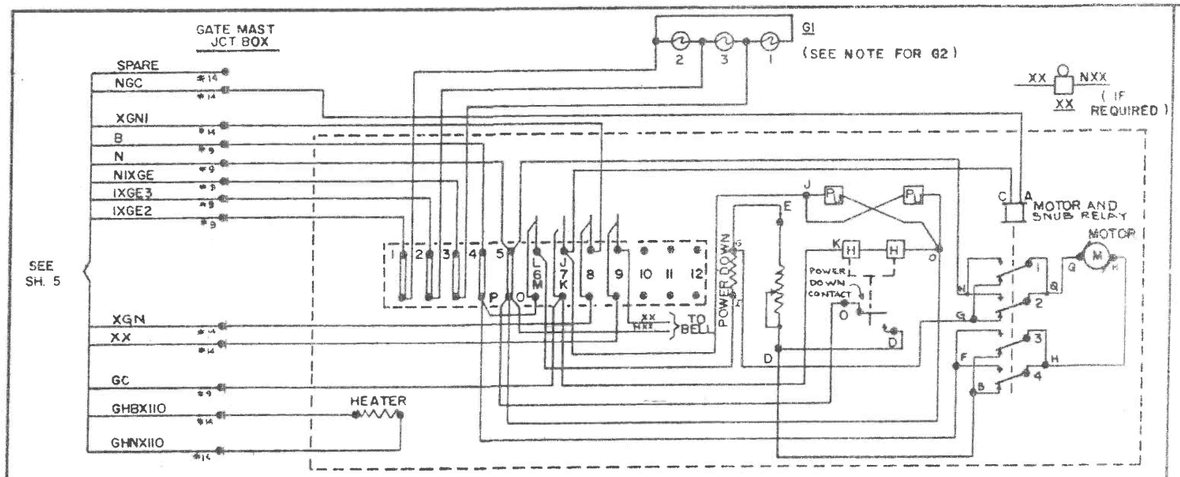

CIRCUIT CONTROLLER DATA			
CONTACT	CONTACT CLOSED	CAM DRIVES CONTACT	CONTACT FUNCTION
6	45° TO 90°	CLOSED	TO OPEN MOTOR DOWN CIRCUIT
7	0° TO 89°	CLOSED	TO CUT OFF MOTOR AFTER GATE HAS CLEARED
8	83° TO 90°	CLOSED	CONTROL XGNR RELAY
9	5° TO 90°	CLOSED	CONTROL BELL

SAFETRAN "SM" GATES

TO MAKE GATE ARM DESCEND SLOWER, MOVE JUMPER WIRE 'X' ON DIODE BOARD TO HIGHER NUMBER NOT TO EXCEED POSITION #4.

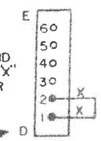

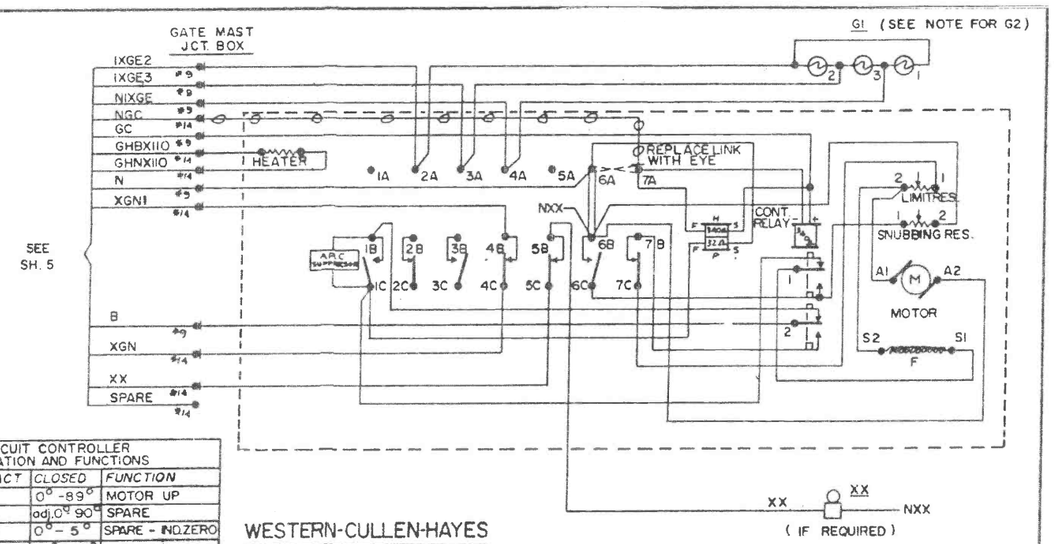

CIRCUIT CONTROLLER OPERATION AND FUNCTIONS		
CONTACT	CLOSED	FUNCTION
1	0°-89°	MOTOR UP
2	adj. 0° 90°	SPARE
3	0°-5°	SPARE - IND. ZERO
4	86°-90°	XGNR CONTROL
5	5°-90°	BELL CONTROL
6	0°-5°	SNUB
7	45°-90°	MOTOR DOWN

WESTERN-CULLEN-HAYES
3593 CROSSING GATE

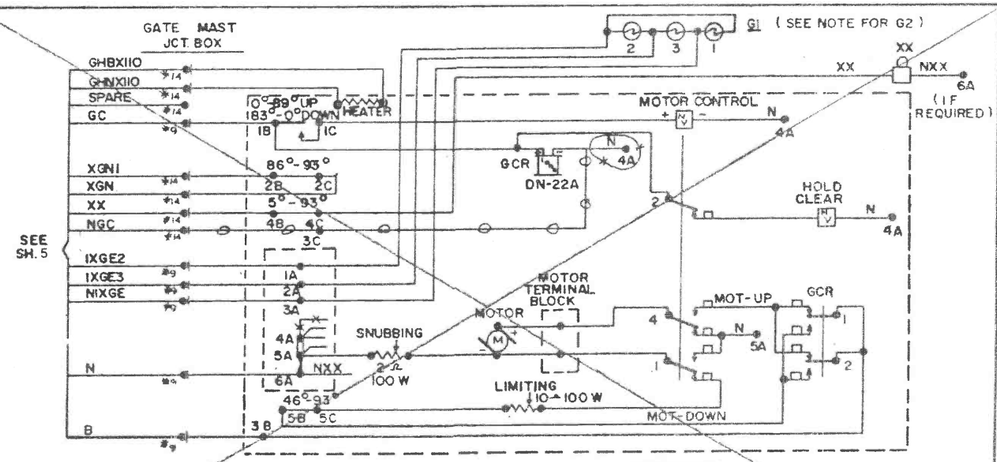

CIRCUIT CONTROLLER DATA			
CONTACT	CONTACT CLOSED	CAM DRIVES CONT.	CONTACT FUNCTION
1B-1C	0° TO 89° UP 83° TO 0° DOWN	CLOSED	TO CUT OFF MOTOR AFTER GATE HAS CLEARED
2B-2C	86° TO 93°	CLOSED	CONTROL XGNR RELAY
4B-4C	5° TO 93°	OPEN	TO OPEN BELL CIRCUIT WHEN ARM IS HORIZONTAL
5B-5C	46° TO 93°	OPEN	TO OPEN MOTOR DOWN CIRCUIT

MODEL 75
WABCO GATE
MECHANISMS
N451483-0101

NOTE: MECHANISMS SHOWN FOR GATE ARMS IN VERTICAL POSITION. EACH HIGHWAY GATE TO BE WIRED SAME AS SHOWN, EXCEPT FOR LIGHTS (SEE DIAGRAM G2), SIDEWALK ARMS ON HIGHWAY GATES TO HAVE STEADY-LIT LIGHT. XGNI IN G2 WILL BECOME B12

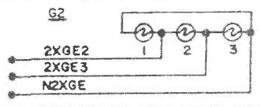

FIELD FORCE TO MAKE WIRING CHANGE IN GATE MECHANISM WHENEVER NEW GATE IS INSTALLED.
-o-o- = ON
-x-x- = OFF

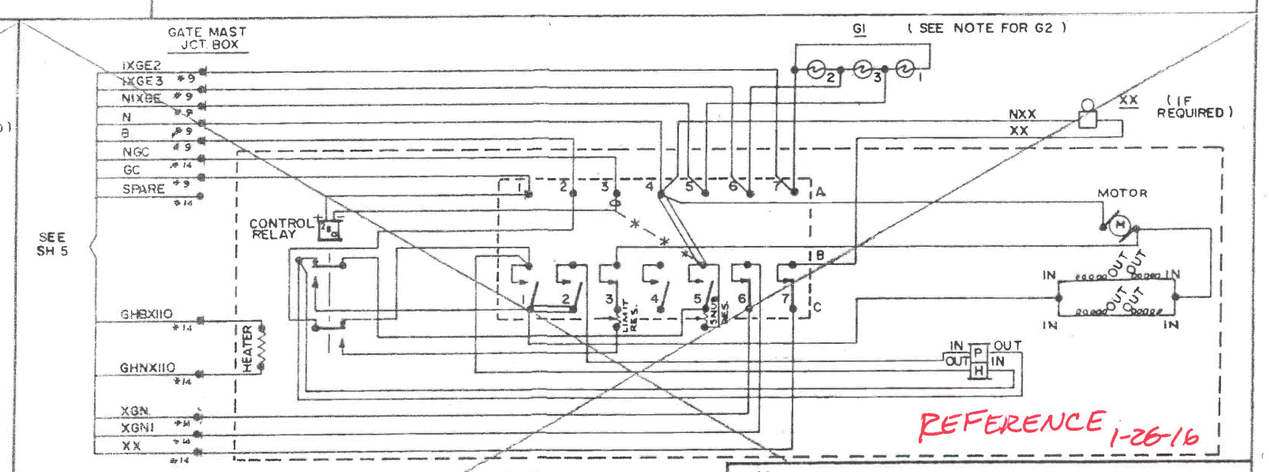

REFERENCE 1-26-16

G.R.S. CO. TYPE "D" GATES

CIRCUIT CONTROLLER OPERATION AND FUNCTIONS					
CONTACT	CLEARING		DESCENDING		FUNCTION
SPACE NO.	CLOSES	OPENS	CLOSES	OPENS	OF CONTACT
1	--	88°	78°	--	UP MOTOR CUT-OUT
2	76°	85°	85°	76	HOLD CLEAR CONTROL
3	50°	--	--	50°	DOWN MOTOR CUT-OUT
4	--	5°	5°	--	SPARE
5	--	5°	5°	--	SNUB RESIS. SHUNT
6	85°	--	--	85°	XGNR CONTROL
7	6°	--	--	6°	BELL CONTROL

NORFOLK SOUTHERN

HOBBIE AVE KANKAKEE, ILL.

HIGHWAY CROSSING
GATE MECHANISM TYPICAL

ISSUE DATE: JAN. 26, 1982		3123-1002
REV. 1	8-5-98	SHEET 6 OF 9

CT-900
5-8-81

31231002.06

BARCLAY BROTHERS 8-78

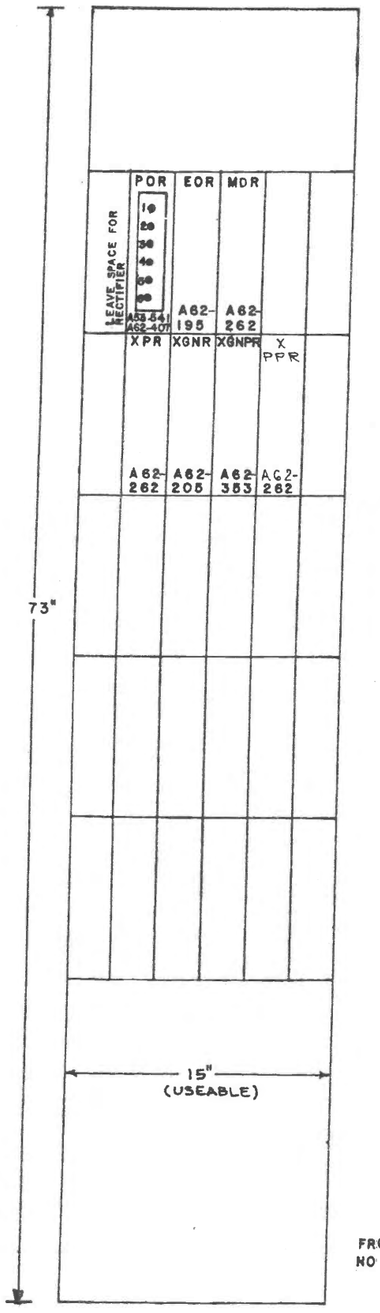

FRONT VIEW
NO SCALE

RELAY ENERGY LOOP
(REAR VIEW)

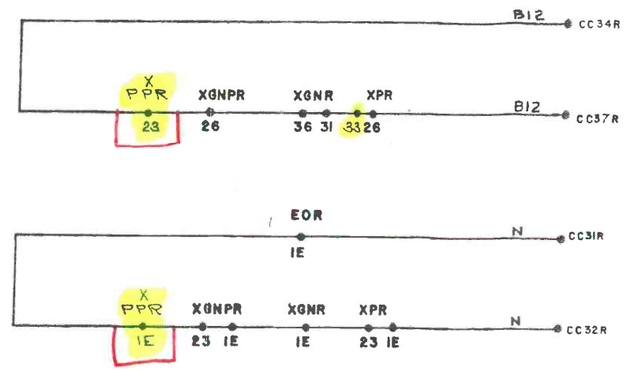

RELAY FUNCTIONS

XPR	XGNR	XGNPR	EOR	POR
12- TC	B13-HD-EBX	22-NGC	12-EX	12-EBX
15- NTC	B15-HD-EBX	26-GC	15-EX	15-ENX
22-NGC	32-EO		32-EX	22-EBX
25-GC	35-XGNP		35-EX	25-ENX
32-XPP XGN				32-EBX
35-INTER-CONNECT 1				35-ENX

MDR	XPPR	STR
12-XP	22 XGN	1 XP
15	25 INTERCONNECT	2
22		
25		
32		
35		

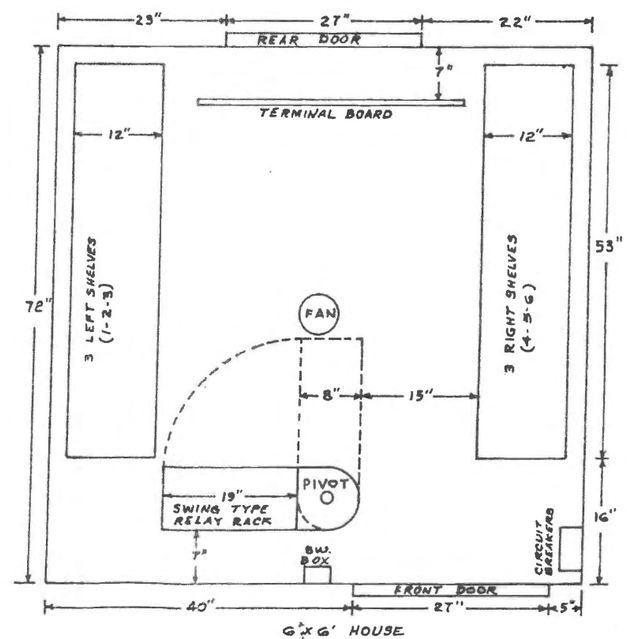

6'x6' HOUSE
SERRMI PRODUCTS INC.

SUBMITTED BY
SAFETRAN SYSTEMS
12-30-98/RJD
SSC# 17002
-o-o-o- =IN

RED=IN
YELLOW=OUT
1-26-16
RDL

NORFOLK SOUTHERN

HOBBIE AVE. KANKAKEE, ILL.

HIGHWAY CROSSING
RELAY RACK & CONNECTIONS
HOUSE LAYOUT

ISSUE DATE: JAN. 26, 1982		3123-1002
REV. 5	04-29-11	SHEET 7 OF 9

CT 1610-MD1
11-2-81

31231002.07

BARCLAY BROTHERS 6-78

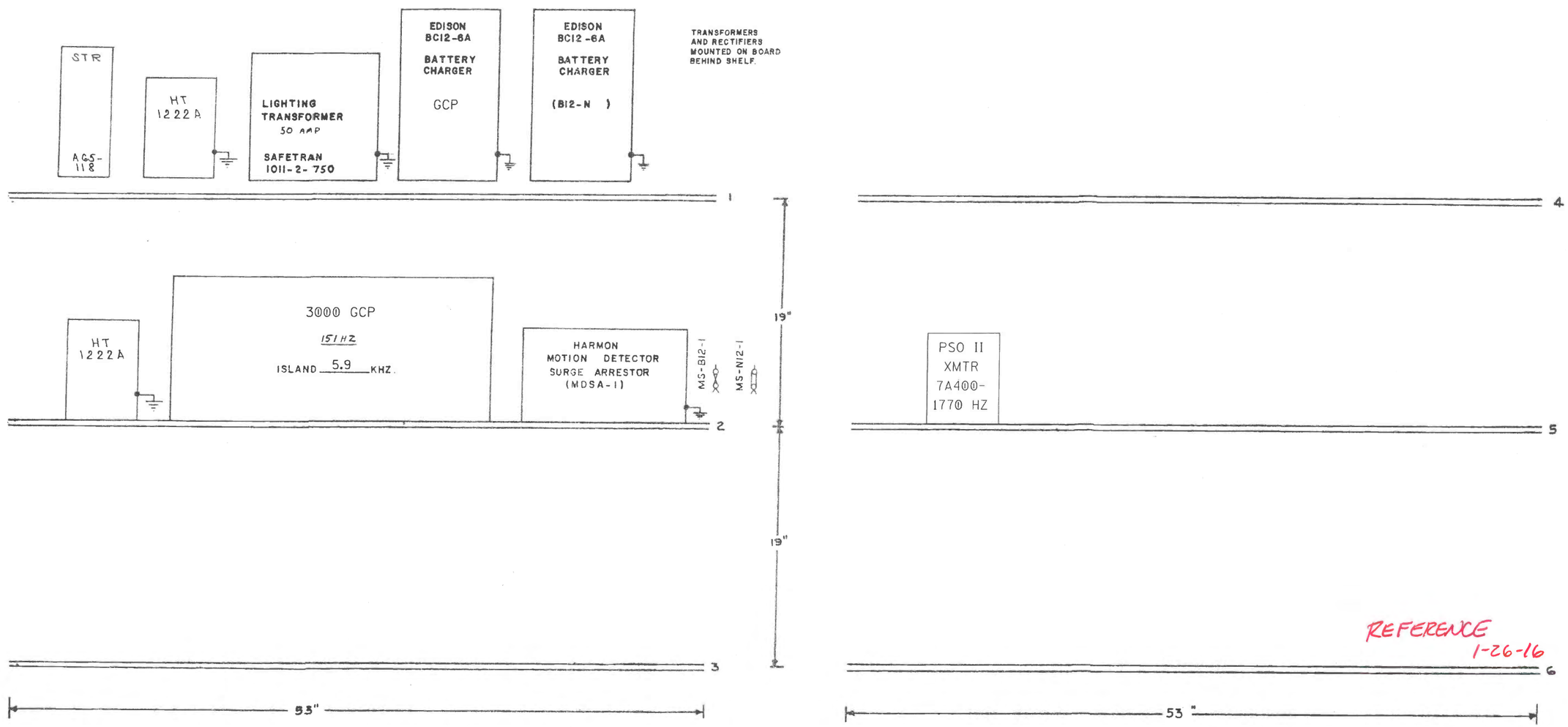

LEFT SHELVES

RIGHT SHELVES

SUBMITTED BY:
SAFETRAN SYSTEMS
12-30-98/RJD
SSC# 17002
-o-o-o- =IN

SCALE 2"/10" = 1"

NORFOLK SOUTHERN

HOBBIE AVE. KANKAKEE, ILL.

HIGHWAY CROSSING SHELF ARRANGEMENT

ISSUE DATE: JAN. 26, 1982		3123-1002
REV. 5	04-29-11	SHEET 8 OF 9

CT-1610 MDI 11-2-81

31231002.08

N14201

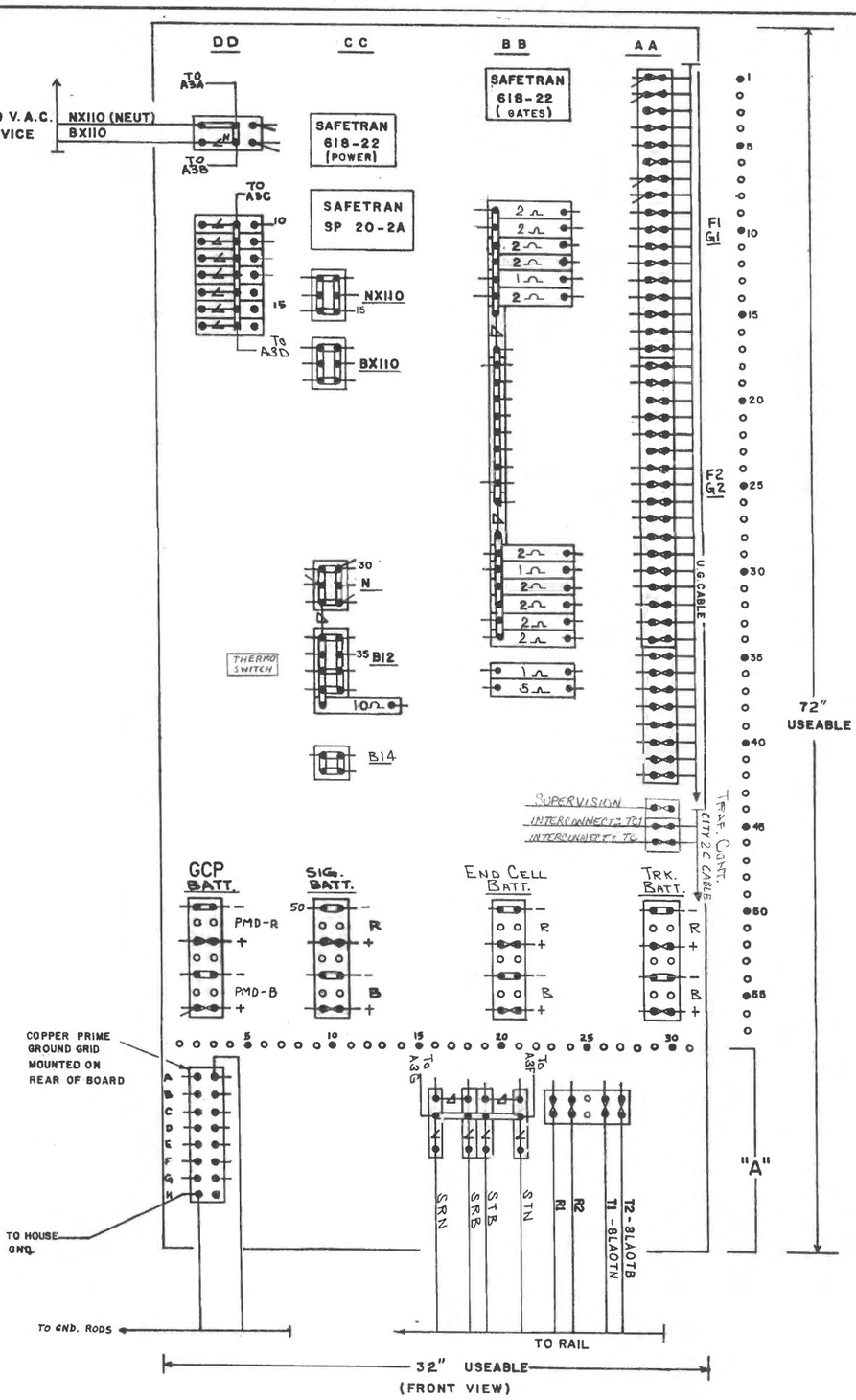

2 Ω ADJ. - SAFETRAN 029602-6X

10 Ω FIXED - SAFETRAN 029245-3X

500 Ω FIXED - CONRAIL P.C. 0242371I

- TERMINAL STRIP WABCO N106937
- 3 POST PORCELAIN BASE - SAFETRAN 022485-23X
- ARRESTOR - SAFETRAN 022485-28X
- ARRESTOR, HEAVY DUTY - SAFETRAN 022615-4X
- EQUALIZER - SAFETRAN 022700-1X
- TERMINAL BLOCK - SAFETRAN - 023217-13X
- BUSS LINK - WABCO N206754
- TEST LINK ASSY. - SAFETRAN 024620-1X

GROUND CONNECTIONS TO BE IN ACCORDANCE WITH STANDARD PLAN CS-9001-A.

SUBMITTED BY
SAFETRAN SYSTEMS
12-30-98/RJD
SSC# 17002

NORFOLK SOUTHERN

HOBBIE AVE.
KANKAKEE, ILL.

HIGHWAY CROSSING
TERMINAL BOARD ARRANGEMENT

SCALE: 3/16" = 1'

ISSUE DATE	JAN 26, 1982	31231002
REV. 5	04-29-11	SHEET 9 OF 9

CT-1610 MD1
11-2-81

31231002.09

REFERENCE 1-26-16

BARCLAY BROTHERS P-18