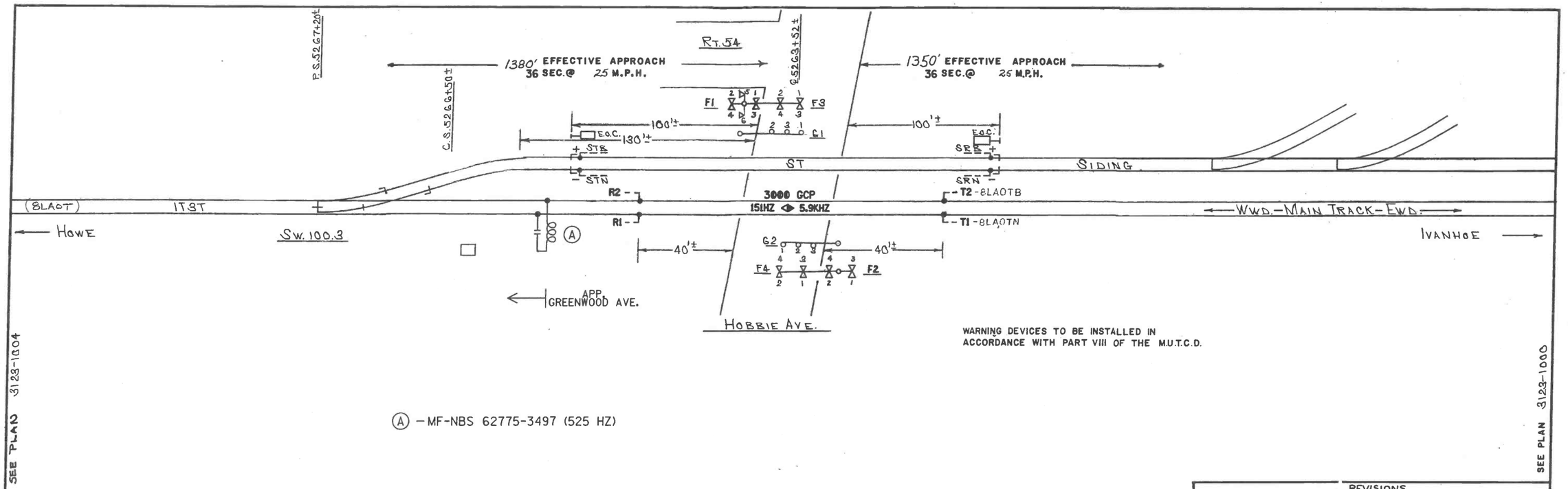


WARNING DEVICES TO BE INSTALLED IN ACCORDANCE WITH PART VIII OF THE M.U.T.C.D.

Ⓐ – MF-NBS 62775-3497 (525 HZ)

THIS REVISION TO RELOCATE 3-WIRE INTERCONNECT CIRCUIT
1-26-16
RDL

| REVISIONS | | | | |
|---|---|---|---|---|
| 5 | PLAN REVISED ACCOUNT OF PMD RETIRED AND 3000 GCP INSTALLED.<br>IN SERVICE: 04-29-11<br>PER: BSW | RSD | SAH | |
| 4 | 02-24-04 | KSW | SSC | SCK |
| | PLAN REVISED ACOUNT OF WARNING DEVICES UPGRADED AT GREENWOOD AVENUE<br>PRJ NO: 04.0483<br>SYSTEM FILE NO:<br>WO/AFE:<br>IN SERVICE: 03-16-05<br>PER: DAS | RHR | SSC | |
| 3 | 12-1-99<br>SHORTENED APPROACH FOR HOBBIE AVE | HIL | | |
| 2 | 12-21-98<br>NEW PLAN DRAWN ACCOUNT INSTALLATION OF RADIO OPERATIVE APPROACH SIGNAL.<br>SYSTEM FILE NO:<br>WO/AFE NO:<br>IN SERVICE:<br>PER: | AVB | RJD | SRW |
| 1 | NEW PLAN DRAWN ACCOUNT WARNING DEVICES ADDED AT HOBBIE AVE. (RT-50)<br>FILE: H4893<br>W.O.: 48548 PFC: 2<br>IN SERVICE: 8-5-98<br>PER: GFC | GAB | CED | |

SUBMITTED BY
SAFETRAN SYSTEMS
12 30-98/RJD
SSC# 17002

NORFOLK SOUTHERN

DEARBORN DIVISION — KANKAKEE SEC. TRACK

HOBBIE AVE. (RT-50) KANKAKEE, ILLINOIS

HIGHWAY CROSSING WARNING DEVICES - LOCATION PLAN

AAR-DOT# 534 387-H

APPROVED: H.A. Orlando OF E&C
CHIEF ENGR. C. & S.

PROPERTY
PENNSYLVANIA R.R.

ISSUE DATE: JAN. 26, 1982 — 3123-1002

REV. 5 — 04-29-11 — SHEET 1 OF 9

CT-1610 MD2
11-2-81

31231002.01

N14201

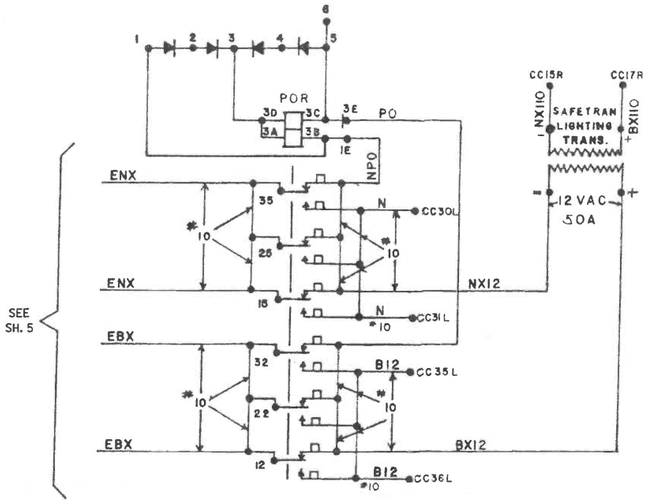


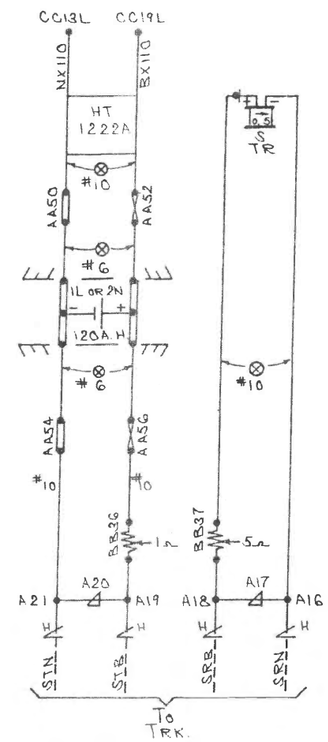


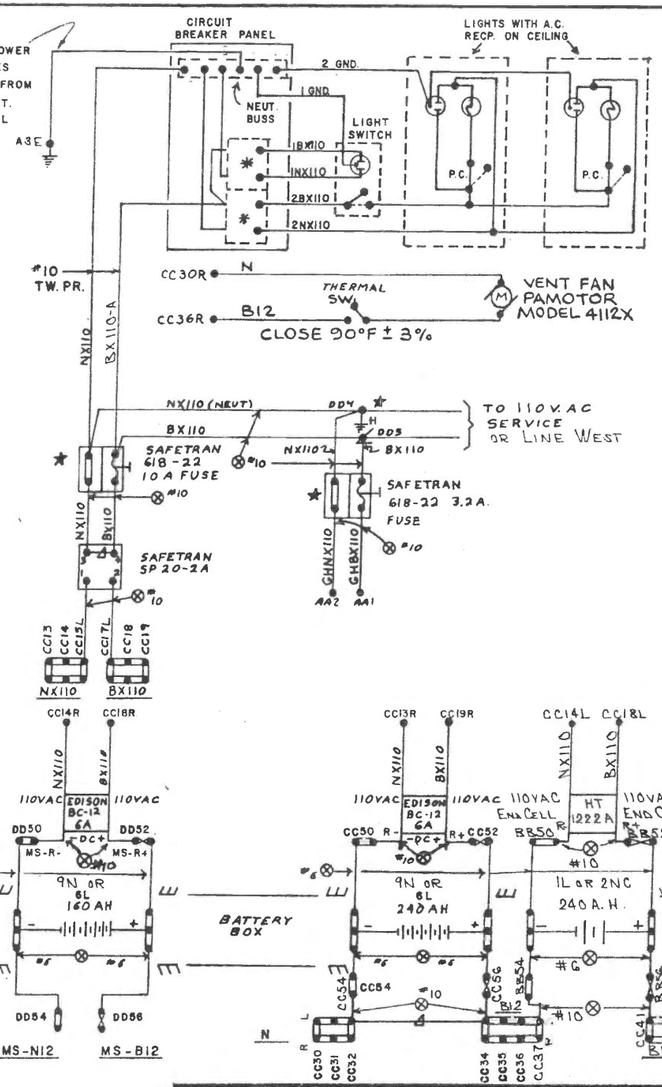


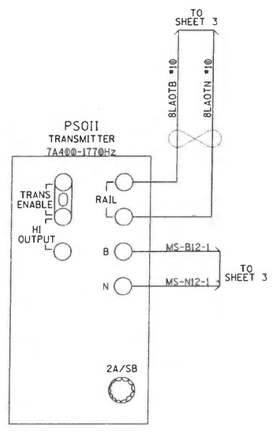


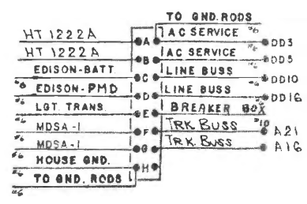


REFERENCE 1-26-76

NOTES:

- ALL CASE WIRING #16 EXCEPT AS SHOWN.
- ⊗ = TWISTED PAIR.
- ★ = WHEN UNGROUNDED POWER IS USED REPLACE LINKS WITH FUSE OR ARRESTER EQUIVALENT TO BX110 SIDE OF CIRCUIT.
- ✱ = 20 AMP. GROUND FAULT CIRCUIT BREAKER.

NORFOLK SOUTHERN

HOBBIE AVE. KANKAKEE, ILL.

HIGHWAY CROSSING POWER DISTRIBUTION

| | | |
|---|---|---|
| ISSUE DATE: JAN. 26, 1982 | | 3123-1002 |
| REV. 4 | 03-16-05 | SHEET 2 OF 9 |

CT-1610 MDI 11-2-81 31231002.02

BARCLAY BROTHERS 6-79

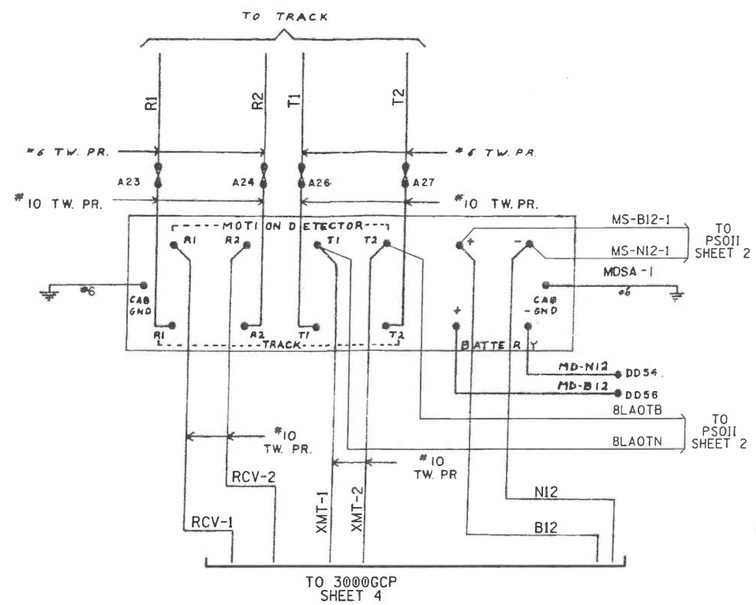


RED=IN
YELLOW=OUT
1-26-16
RDL

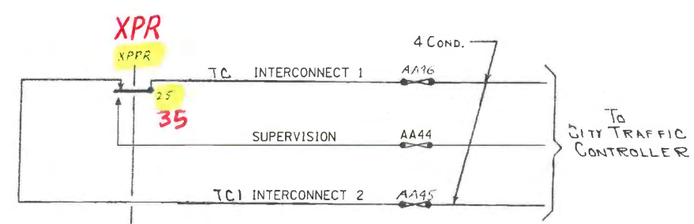


SUBMITTED BY
SAFETRAN SYSTEMS
12-30-98 RJD
SSC# 17002
-o-o-o- =IN

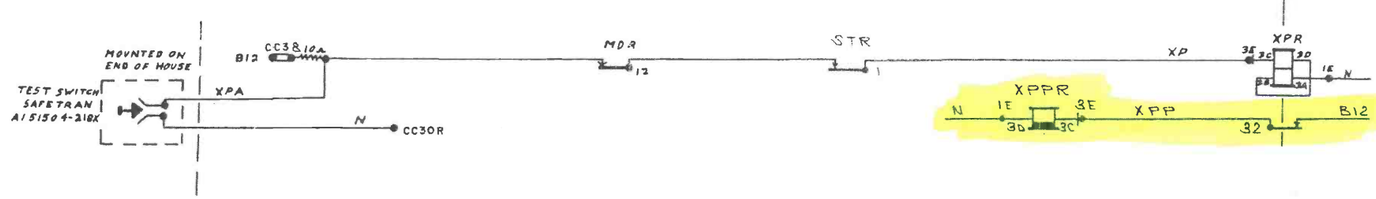


NORFOLK SOUTHERN

HOBBIE AVE. KANKAKEE, ILL.

HIGHWAY CROSSING MDSA-1

| | | |
|---|---|---|
| ISSUE DATE: JAN. 26, 1982 | | 3123-1002 |
| REV. 5 | 04-29-11 | SHEET 3 OF 9 |

CT 1610 MDI 11-2-81

31231002.03

N14201

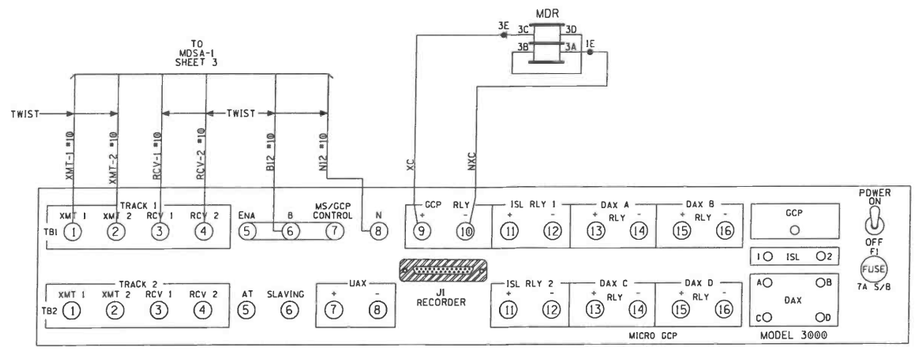


3000 GCP

TI IF = 5.9 KHZ

NOTES:
ALL WIRING TO BE #16AWG
UNLESS NOTED OTHERWISE.

| 3000 PROGRAMMING CHART | (LEVEL: J) |
|---|---|
| NUMBER OF TRACK TRANSCEIVERS | 1 |
| T1: FREQUENCY | 151Hz |
| T2: FREQUENCY | Hz |
| T1: UNIDIRECTIONAL/BIDIRECTIONAL | BI |
| T2: UNIDIRECTIONAL/BIDIRECTIONAL | |
| T1: XMIT LEVEL (MAX/MED) | MED |
| T2: XMIT LEVEL (MAX/MED) | |
| T1: PREDICTOR/MOTION SENSOR | PRED |
| T2: PREDICTOR/MOTION SENSOR | |
| T1: WARNING TIME | 36 Sec |
| T2: WARNING TIME | Sec |
| T1: APPROACH DISTANCE | 1350 Ft |
| T2: APPROACH DISTANCE | Ft |
| UAX1 PICKUP DELAY (UAX) (0 = OFF) | 0 Sec |
| ENA/UAX2 DELAY (0 = ENA) | Sec |
| T1: ISLAND DISTANCE | 180 Ft |
| T2: ISLAND DISTANCE | Ft |
| NUMBER OF DAX'S | 0 Ea |
| DAX A TRACK ASSIGNMENT (T1/T2) | |
| DAX A DISTANCE (0 = PREEMPT) | Ft |
| DAX A WARNING TIME | Sec |
| DAX B TRACK ASSIGNMENT (T1/T2) | |
| DAX B DISTANCE (0 = PREEMPT) | Ft |
| DAX B WARNING TIME | Sec |
| DAX C TRACK ASSIGNMENT (T1/T2) | |
| DAX C DISTANCE (0 = PREEMPT) | Ft |
| DAX C WARNING TIME | Sec |
| DAX D TRACK ASSIGNMENT (T1/T2) | |
| DAX D DISTANCE (0 = PREEMPT) | Ft |
| DAX D WARNING TIME | Sec |
| SLAVING (MASTER/SLAVE) | MASTER |
| PASSWORD ENABLED | NO |
| RECORDER INSTALLED | NO |

EXPANDED PROGRAMMING

| | | |
|---|---|---|
| T1: SWITCH TO MS (ENTER EZ VALUE) | 10 % | |
| T2: SWITCH TO MS (ENTER EZ VALUE) | % | |
| T1: TRANSFER DELAY MS TO GCP (0 = OFF) | 0 Sec | |
| T2: TRANSFER DELAY MS TO GCP (0 = OFF) | Sec | |
| T1: TRANSFER MS TO GCP PRIME (ON/OFF) | | (1) |
| T2: TRANSFER MS TO GCP PRIME (ON/OFF) | | (1) |
| T1: TRANSFER MS TO GCP DAX A (ON/OFF) | | (2) |
| T2: TRANSFER MS TO GCP DAX A (ON/OFF) | | (2) |
| T1: TRANSFER MS TO GCP DAX B (ON/OFF) | | (2) |
| T2: TRANSFER MS TO GCP DAX B (ON/OFF) | | (2) |
| T1: TRANSFER MS TO GCP DAX C (ON/OFF) | | (2) |
| T2: TRANSFER MS TO GCP DAX C (ON/OFF) | | (2) |
| T1: TRANSFER MS TO GCP DAX D (ON/OFF) | | (2) |
| T2: TRANSFER MS TO GCP DAX D (ON/OFF) | | (2) |
| T1: PRIME PREDICTION OFFSET (0 = OFF) | 0 Ft | |
| T2: PRIME PREDICTION OFFSET (0 = OFF) | Ft | |
| PICKUP DELAY PRIME | 15 Sec | |
| PICKUP DELAY DAX A | Sec | |
| PICKUP DELAY DAX B | Sec | |
| PICKUP DELAY DAX C | Sec | |
| PICKUP DELAY DAX D | Sec | |
| T1: ENHANCED DETECTION (ON/OFF) | OFF | |
| T2: ENHANCED DETECTION (ON/OFF) | | |
| BACK-TO-BACK T1 AND T2 (NO/YES) | | (3) |
| T1: STATION STOP TIMER | 10 Sec | (3) |
| T2: STATION STOP TIMER | Sec | (3) |
| T1: NUMBER OF TRACK WIRES (4/6) | 4 | |
| T2: NUMBER OF TRACK WIRES (4/6) | | |
| T1: LOW EX ADJUSTMENT | 0 | |
| T2: LOW EX ADJUSTMENT | | |
| T1: LOW EZ DETECTION | OFF | |
| T2: LOW EZ DETECTION | | |
| T1: LOW EZ DETECTION TIMER (ON/OFF) | 10 Min | (4) |
| T2: LOW EZ DETECTION TIMER (ON/OFF) | Min | (4) |
| T1: POSITIVE START (EZ LEVEL) (0 = OFF) | 0 | |
| T2: POSITIVE START (EZ LEVEL) (0 = OFF) | | |
| T1: POSITIVE START TIMEOUT (0 = NONE) | Min | (5) |
| T2: POSITIVE START TIMEOUT (0 = NONE) | Min | (5) |
| SET AT OPERATION (NORMAL/DIAGNOSTIC) | NORMAL | |
| DIAGNOSTIC MESSAGES (ON/OFF) | ON | |
| DAX MESSAGES (ON/OFF) | ON | |
| ADVANCE PREEMPT TIMER (0 = OFF) | 0 | |
| T1: MOTION SENSING LEVEL (0 = NORMAL) | 0 % | |
| T2: MOTION SENSING LEVEL (0 = NORMAL) | % | |

300002 PROGRAMMING NOTES:

1) AVAILALBE WHEN "TRANSFER DELAY MS TO GCP" AND "PRIME PREDICTION OFFSET" IS ON
2) AVAILABLE WHEN "TRANSFER DELAY MS TO GCP" AND DAX DISTANCE IS GREATER THAN ZERO
3) AVAILABLE WHEN "ENHANCED DETECTION" IS ON
4) AVAILABLE WHEN "LOW EZ DETECTION" IS ON
5) AVAILABLE WHEN "POSITIVE START" IS ON

* = 1ST SLOT AT LEFT END OF BAY

| MODEL 3000 GCP MODULE ASSEMBLIES | | | | | | | | | | |
|---|---|---|---|---|---|---|---|---|---|---|
| UPPER BAY | | | | | | | | | | |
| MODULES POSITION | M1 | M2 | M3 | M4 | M5 | M6 | M7 | M8 | M9 | M10 |
| MODULE NUMBERS | 80211-1(1)* ISL | 80211-1(2) ISL | 80012 T/R 1 | 80012 T/R 2 | 80013 RLY DRV | 80214 PROCS | 80255 REC-INTF | 80016 (1) DAX | 80016 (2)DAX | 80020 +80017 |
| MODULES USED | X | | X | | X | X | | | | X |

**

NOTES:
1 - SEE IPI INSTRUCTION AND INSTALLATION MANUAL FOR 80211 ISLAND CALIBRATION PROCEDURE.

2 - TOGGLE SWITCH ON MOTHER BOARD:
UP = DUAL FREQ.
DOWN = SINGLE FREQ.

** = 80214 & 80255 (WITH JUMPER) CARDS AND E-LEVEL OR LATER SOFTWARE NEEDED FOR SEAR II / ECHELON CAPABILITIES.

3000 GCP SET-UP

REFERENCE
1-26-16

REVISIONS

3000 GCP

| | | | |
|---|---|---|---|
| DESIGNED BY: - - - | NORFOLK SOUTHERN | | |
| DRAWN BY: RSD 04-29-11 | OFFICE OF ASS'T. VICE PRESIDENT COMM. & SIGNAL, ATLANTA, GA. | M.P.: | 100.20 |
| CHECKED BY: SAH 04-29-11 | KANKAKEE, IL CFLGS AT HOBBIE AVE (RT-50) | | |
| IN SERVICE: BSW 04-29-11 | CADD or DWG. No. 312310002.04 | FILE No. R- | |
| | | SHEET No. | 4 of 9 |

PROPERTY
NORFOLK SOUTHERN RAILWAY CO.

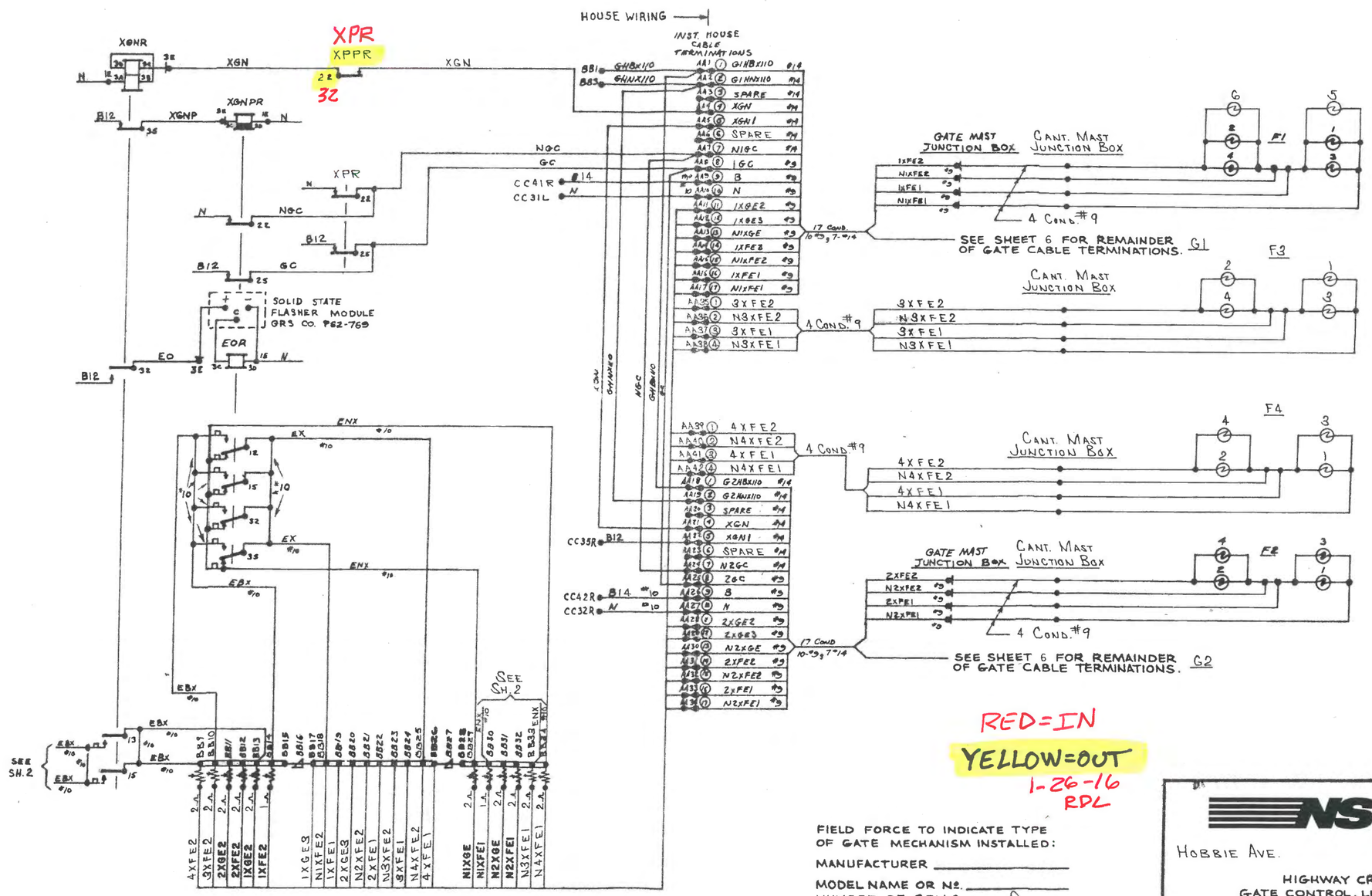


FIELD FORCE TO INDICATE TYPE OF GATE MECHANISM INSTALLED:

MANUFACTURER _____

MODEL NAME OR Nº. _____

NUMBER OF BELLS 0

(SEE SHEET 5 FOR TYPICAL MECHANISMS)

NORFOLK SOUTHERN

HOBBIE AVE. KANKAKEE, ILL.

HIGHWAY CROSSING
GATE CONTROL, LIGHTING CIRCUITS
AND CABLE TERMINATIONS

| ISSUE DATE: JAN. 26, 1982 | | 3123-1002 |
|---|---|---|
| REV. 5 | 04-29-11 | SHEET 5 OF 9 |

CT 1610 MDI 31231002.05
11-2-81

N14201