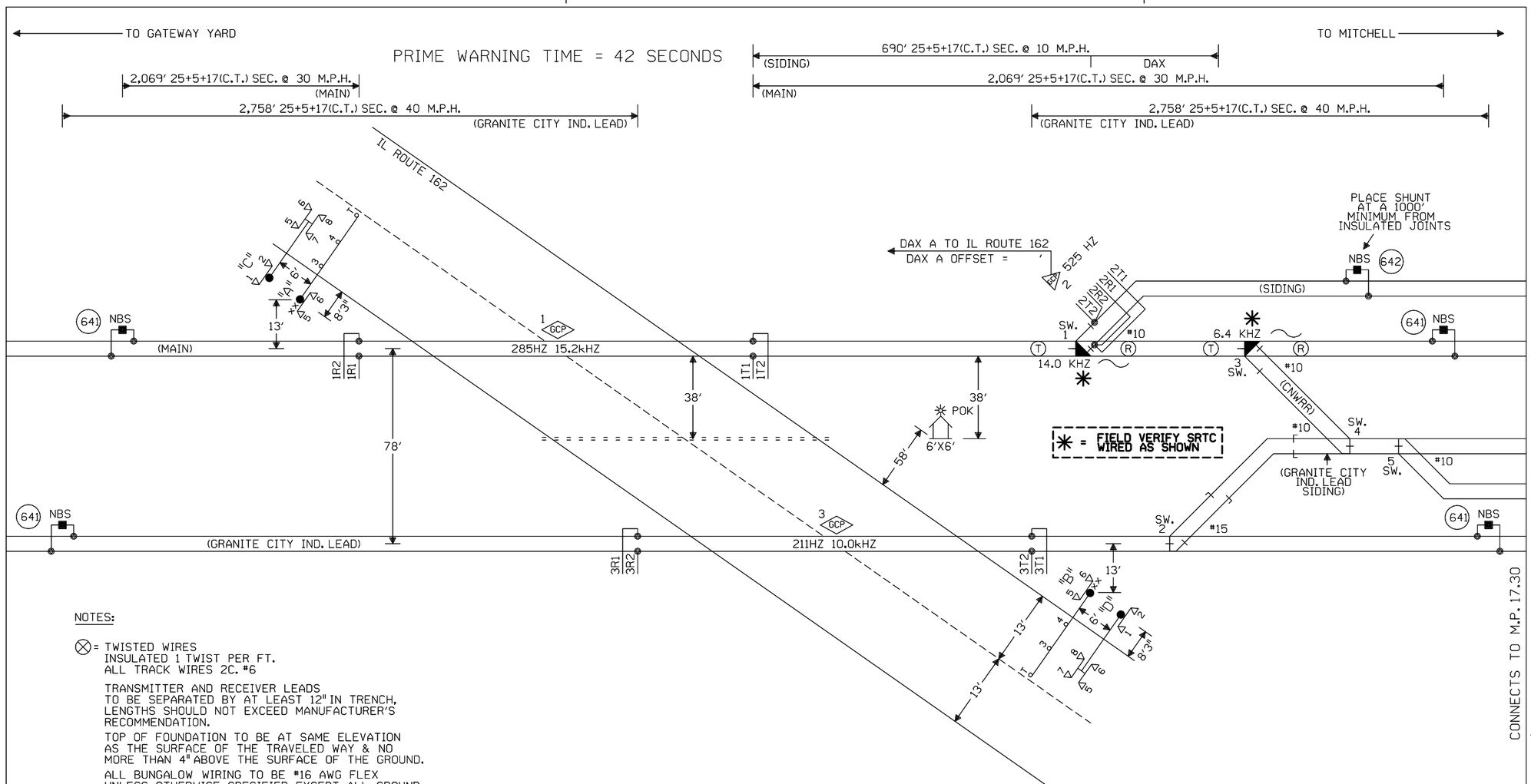

NOTES:

⊗ = TWISTED WIRES
INSULATED 1 TWIST PER FT.
ALL TRACK WIRES 2C. #6

TRANSMITTER AND RECEIVER LEADS TO BE SEPARATED BY AT LEAST 12" IN TRENCH, LENGTHS SHOULD NOT EXCEED MANUFACTURER'S RECOMMENDATION.

TOP OF FOUNDATION TO BE AT SAME ELEVATION AS THE SURFACE OF THE TRAVELED WAY & NO MORE THAN 4" ABOVE THE SURFACE OF THE GROUND.

ALL BUNGALOW WIRING TO BE #16 AWG FLEX UNLESS OTHERWISE SPECIFIED EXCEPT ALL GROUND WIRE TO BE #6 AWG FLEX OR LARGER.

ALL WIRING IN GATE MECHANISM TO BE #10 "AWG FLEX".

REFER TO UP STANDARD DWG FOR BUNGALOW GROUNDING.

PORTABLE GENERATOR EXTENSION CORD FOR 240V TO 240V IS PROVIDED AS WELL AS A 120V TO 240V ADAPTER.

ALL LIGHTS TO BE 12" ROUNDELS.

= = = = = = 4" X 70' CONDUIT

LIGHTS: LED LIGHTS

GATE A: 21'
GATE B: 21'
CANT C: 15'
CANT D: 15'

xx = BELL

ALTON & SOUTHERN GATEWAY MAIN:
TRK 1 ISLAND DISTANCE 152' MINIMUM 120' REQUIRED.

GRANITE CITY IND. LEAD:
TRK 2 ISLAND DISTANCE 152' MINIMUM 120' REQUIRED.

PREFERRED ISLAND WIRE CONNECTIONS ARE A MINIMUM 50' FROM EDGE OF ROAD.

OFFSET AND ISLAND DISTANCES TO BE VERIFIED BY FIELD

W(S) ◄——○——► E(N)

NEW SHEET

Designed: 03/02/15
INSTALL FLS/GATES, CANTS & CWT AT IL ROUTE 162 M.P. 16.09
Rec*: WO*: 27156
IS: /NDR
/ /PRS/JTB

MODIFICATION LEVEL	
O. A. LAST LEVEL CHECKED	DU
LAST LEVEL MOD THIS TYPICAL	DU
LAST LEVEL BY DESIGNER	DU
CHANGED FROM TYPICAL?	Y

REV 01.24.11 4K 2TUCGTYP.1

CIRCUIT MODIFICATIONS ARE NOT TO BE MADE WITHOUT AUTHORITY FROM THE OFFICE OF SIGNAL DESIGN

Date: 03/02/15
Des: PRS
Chk: NDR
AFE: 27156

UNION PACIFIC RAILROAD
GRANITE CITY, ILLINOIS
IL ROUTE 162
ALTON & SOUTHERN GATEWAY SUB.
Office of Sr AVP Engineering - Signal/TCO Omaha, Nebraska

Sh.: 1
DOT 846963J
MP: 16.09
ID: 32021609.1X

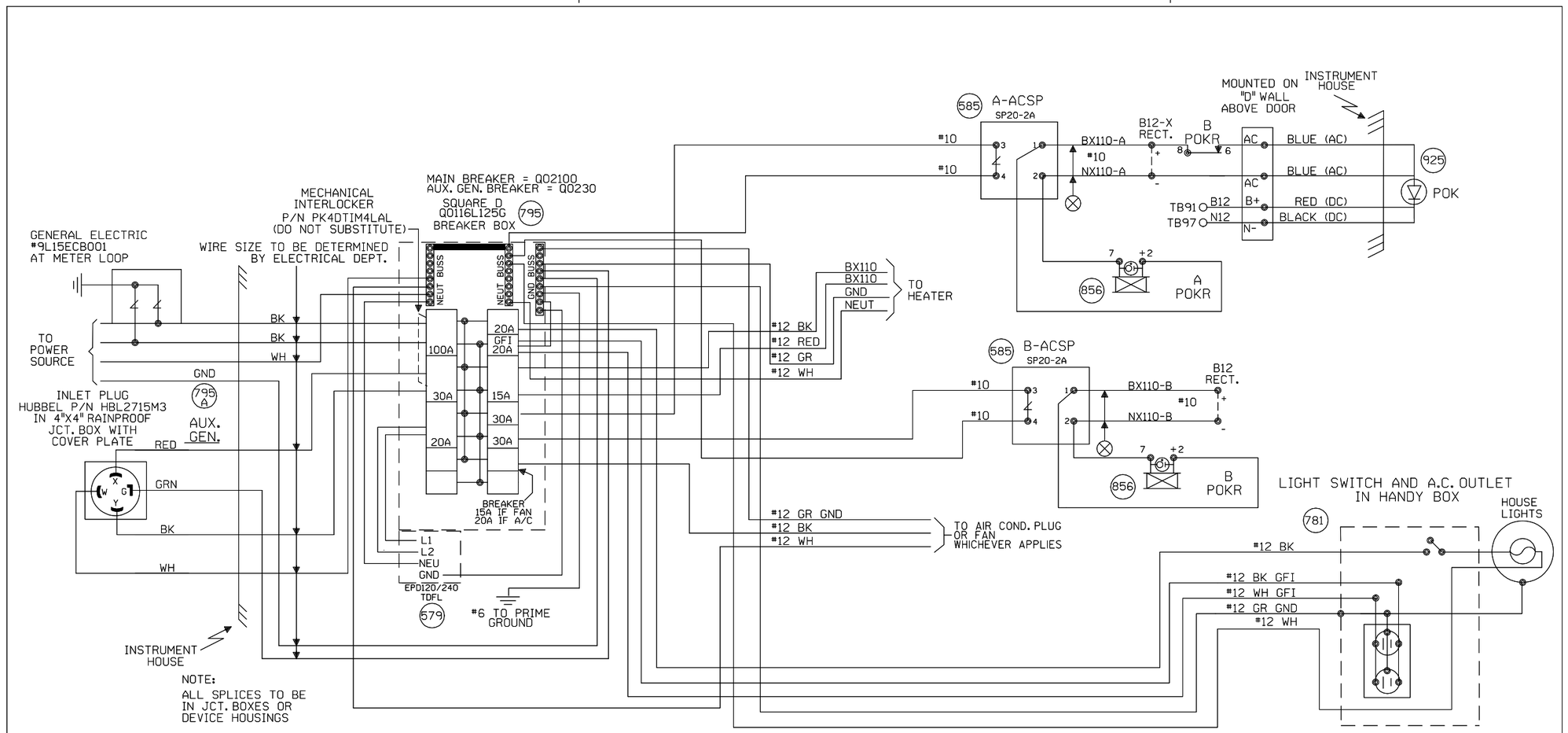

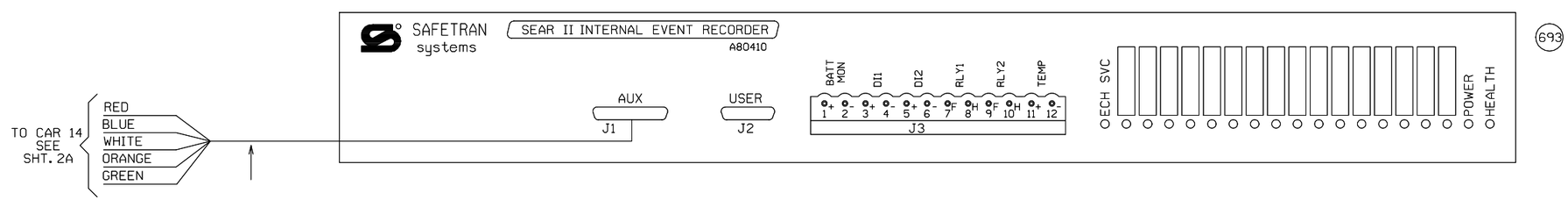

NEW SHEET

Designed: 03/02/15

INSTALL FLS/GATES, CANTS & CWT AT IL ROUTE 162 M.P. 16.09

Rec'd: WO#: 27156
IS: /NDR
/PRS/JTB

MODIFICATION LEVEL	
O. A. LAST LEVEL CHECKED	DU
LAST LEVEL MOD THIS TYPICAL	DU
LAST LEVEL BY DESIGNER	DU
CHANGED FROM TYPICAL?	Y
REV 01.24.11 4K SEARAC.2	

CIRCUIT MODIFICATIONS ARE NOT TO BE MADE WITHOUT AUTHORITY FROM THE OFFICE OF SIGNAL DESIGN

Date: 03/02/15
Des: PRS
Chk: NDR
AFE: 27156

UNION PACIFIC RAILROAD

GRANITE CITY, ILLINOIS
IL ROUTE 162
ALTON & SOUTHERN GATEWAY SUB.

Office of Sr AVP Engineering - Signal/TCO Omaha, Nebraska

Sh.: 2
DOT 846963J
MP: 16.09
ID: 32021609.2X

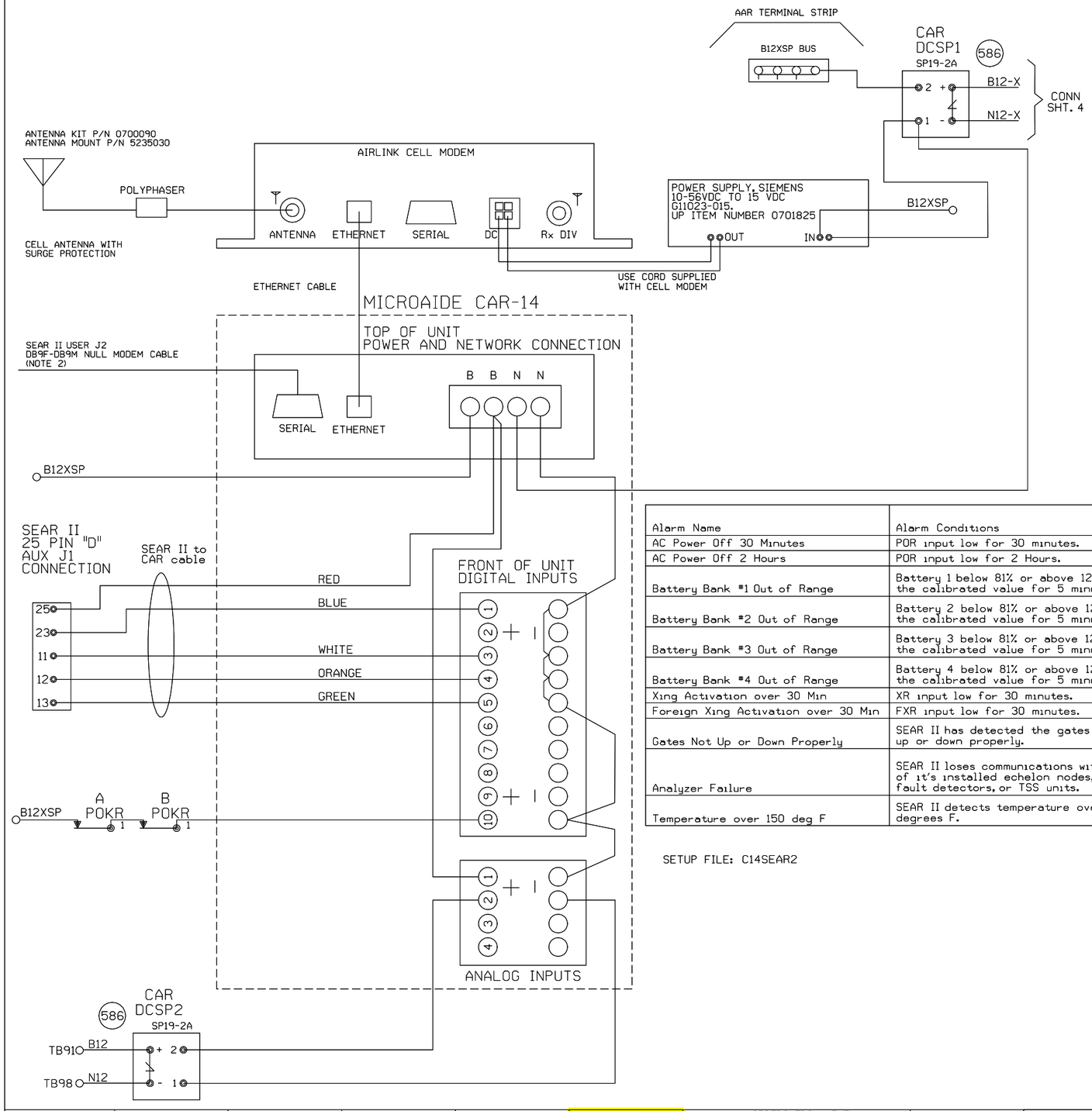

NOTE:
1) DO NOT JUMPER UNUSED INPUTS
2) THE CAR14 SERIAL PORT IS AVAILABLE TO ADD REMOTE CONNECTIVITY TO EXISTING LOGGING EQUIPMENT. USE NULL MODEM CABLE WITH SHIELDING DISCONNECTED AT ONE OR BOTH SIDES.

ANALOG INPUTS:
A1) B12X BATTERY BANK
A2) B12 BATTERY BANK
A3) BATTERY BANK 3
A4) BATTERY BANK 4

DIGITAL INPUTS
D1) XR (BLUE WIRE)
D2) FOREIGN XR
D3) ANALYZER FAILURE (WHITE WIRE)
D4) HIGH TEMPERATURE (ORANGE WIRE)
D5) GATES NOT UP OR DOWN PROPERLY (GREEN WIRE)
D10) POWER OFF INDICATION

Alarm Name	Alarm Conditions	Alarm Clearing Conditions	Cleared by Maintainer Mode?
AC Power Off 30 Minutes	POR input low for 30 minutes.	POR input high for 5 minutes.	No
AC Power Off 2 Hours	POR input low for 2 Hours.	POR input high for 5 minutes.	No
Battery Bank #1 Out of Range	Battery 1 below 81% or above 120% of the calibrated value for 5 minutes.	Battery 1 within acceptable range for 5 minutes.	No
Battery Bank #2 Out of Range	Battery 2 below 81% or above 120% of the calibrated value for 5 minutes.	Battery 2 within acceptable range for 5 minutes.	No
Battery Bank #3 Out of Range	Battery 3 below 81% or above 120% of the calibrated value for 5 minutes.	Battery 3 within acceptable range for 5 minutes.	No
Battery Bank #4 Out of Range	Battery 4 below 81% or above 120% of the calibrated value for 5 minutes.	Battery 4 within acceptable range for 5 minutes.	No
Xing Activation over 30 Min	XR input low for 30 minutes.	XR input high for 10 seconds.	Yes
Foreign Xing Activation over 30 Min	FXR input low for 30 minutes.	FXR input high for 10 seconds.	Yes
Gates Not Up or Down Properly	SEAR II has detected the gates are not up or down properly.	SEAR II has detected the gates are up or down properly.	No
Analyzer Failure	SEAR II loses communications with any of it's installed echelon nodes, ground fault detectors, or TSS units.	SEAR II has recovered after an analyzer failure alarm.	No
Temperature over 150 deg F	SEAR II detects temperature over 150 degrees F.	SEAR II sensor detects temperature is OK after a High-Temp alarm.	No

SETUP FILE: C14SEAR2

NEW SHEET

Designed: 03/02/15
INSTALL FLS/GATES, CANTS & CWT AT IL ROUTE 162 M.P. 16.09
Rec#: WO#: 27156
IS: /NDR
/PRS/JTB

MODIFICATION LEVEL	
Q. A. LAST LEVEL CHECKED	DU
LAST LEVEL MOD THIS TYPICAL	DU
LAST LEVEL BY DESIGNER	DU
CHANGED FROM TYPICAL?	Y

REV 01.24.11 4K ACDCCAR14SII.3

CIRCUIT MODIFICATIONS ARE NOT TO BE MADE WITHOUT AUTHORITY FROM THE OFFICE OF SIGNAL DESIGN

Date: 03/02/15
Des: PRS
Chk: NDR
AFE: 27156

UNION PACIFIC RAILROAD
GRANITE CITY, ILLINOIS
IL ROUTE 162
ALTON & SOUTHERN GATEWAY SUB.
Office of Sr AVP Engineering - Signal/TCO Omaha, Nebraska

Sh.: 2A
DOT 846963J
MP: 16.09
ID: 32021609.2AX

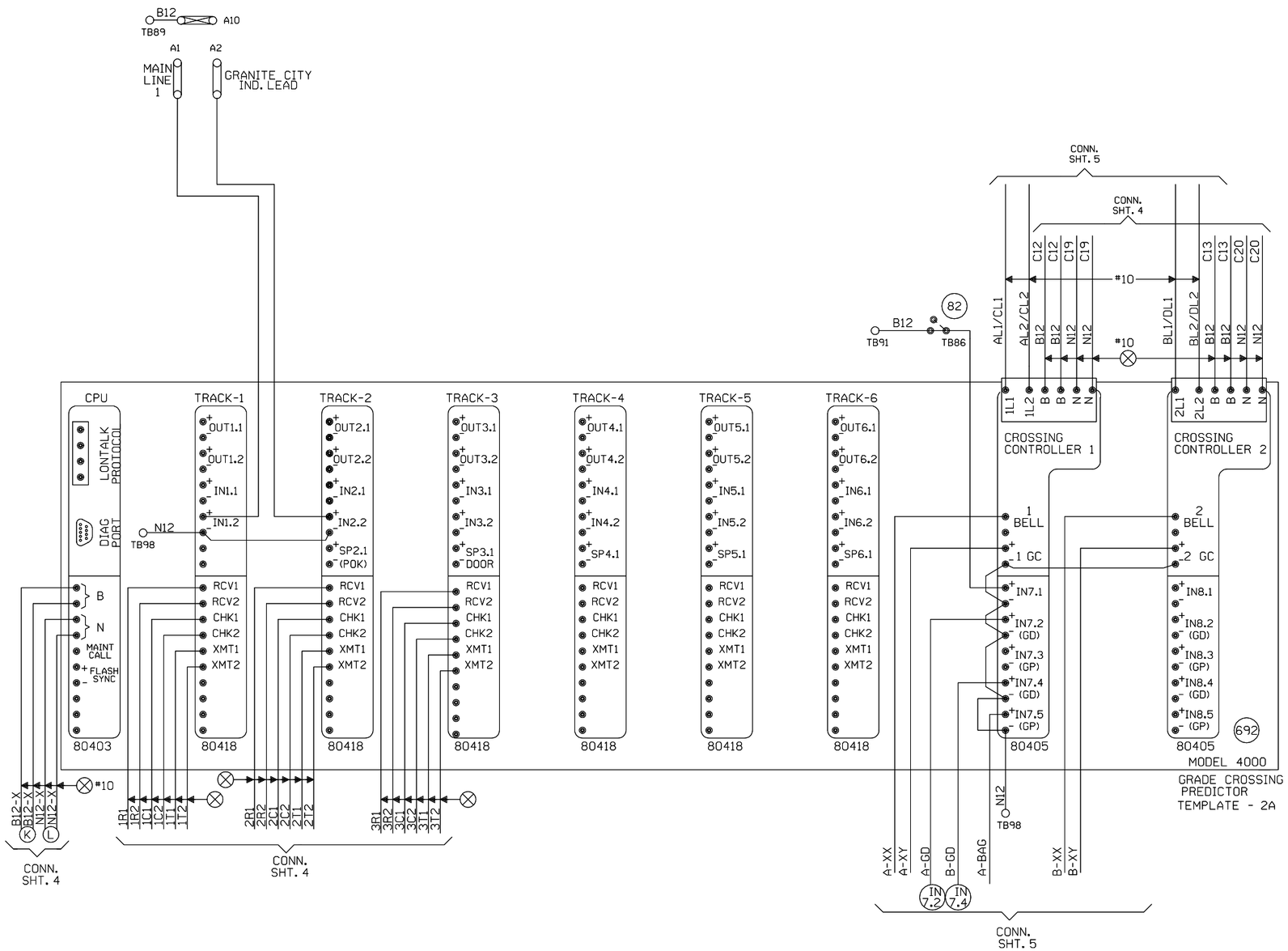

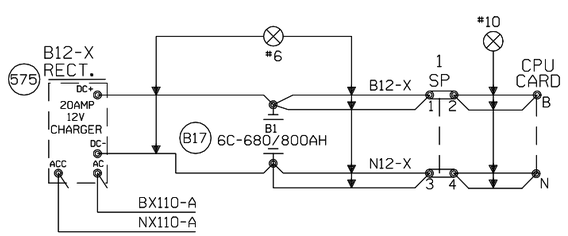

"Mf" FREQUENCY (HZ)	MAXIMUM TRANSMIT WIRE LENGTH (FEET)
86	100
114	125
156	150
211	200
285-970	250

NOTE:
EACH TRANSMITTER TO RAIL WIRE FROM XMT1 AND XMT2 MUST NOT EXCEED THE MAXIMUM LENGTH SPECIFIED IN THE TABLE SHOWN. THE RECEIVER WIRE LENGTH IS NOT CRITICAL. DOES NOT APPLY TO 6 TRACK WIRE APPLICATION.

NEW SHEET

Designed: 03/02/15
INSTALL FLS/GATES, CANTS & CWT AT IL ROUTE 162 M.P. 16.09
Rec*: WO*: 27156
IS: /NDR
/PRS/JTB

MODIFICATION LEVEL	
Q.A. LAST LEVEL CHECKED	DU
LAST LEVEL MOD THIS TYPICAL	DU
LAST LEVEL BY DESIGNER	DU
CHANGED FROM TYPICAL?	Y

REV 01.24.11 4K 4TKB4GF.3

CIRCUIT MODIFICATIONS ARE NOT TO BE MADE WITHOUT AUTHORITY FROM THE OFFICE OF SIGNAL DESIGN

Date: 03/02/15
Des: PRS
Chk: NDR
AFE: 27156

UNION PACIFIC RAILROAD
GRANITE CITY, ILLINOIS
IL ROUTE 162
ALTON & SOUTHERN GATEWAY SUB.
Office of Sr AVP Engineering - Signal/TCO Omaha, Nebraska

Sh.: 3
DOT 846963J
MP: 16.09
ID: 32021609.3X

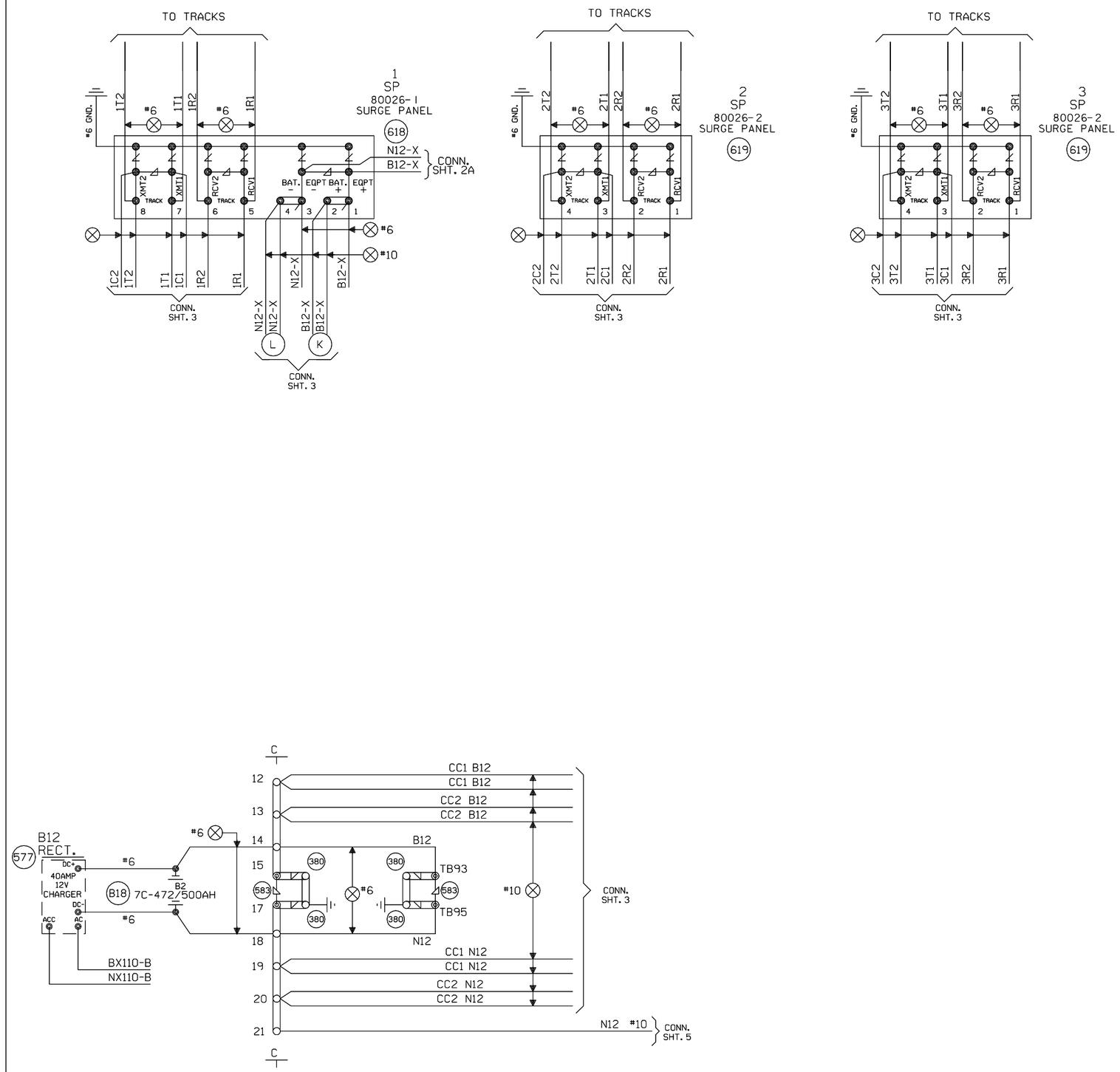

NEW SHEET

Designed: 03/02/15 INSTALL FLS/GATES, CANTS & CWT AT IL ROUTE 162 M.P. 16.09 Rec#: WO#: 27156 IS: /NDR /PRS/JTB	MODIFICATION LEVEL		CIRCUIT MODIFICATIONS ARE NOT TO BE MADE WITHOUT AUTHORITY FROM THE OFFICE OF SIGNAL DESIGN	Date: 03/02/15 Des: PRS Chk: NDR AFE: 27156	UNION PACIFIC RAILROAD GRANITE CITY, ILLINOIS IL ROUTE 162 ALTON & SOUTHERN GATEWAY SUB. Office of Sr AVP Engineering - Signal/TCO Omaha, Nebraska	Sh.: 4 DOT 846963J MP: 16.09 ID: 32021609.4X
	Q.A. LAST LEVEL CHECKED	DU				
	LAST LEVEL MOD THIS TYPICAL	DU				
	LAST LEVEL BY DESIGNER	DU				
	CHANGED FROM TYPICAL?	Y				
	REV 01.24.11 4K 4TKSPGFC.4					

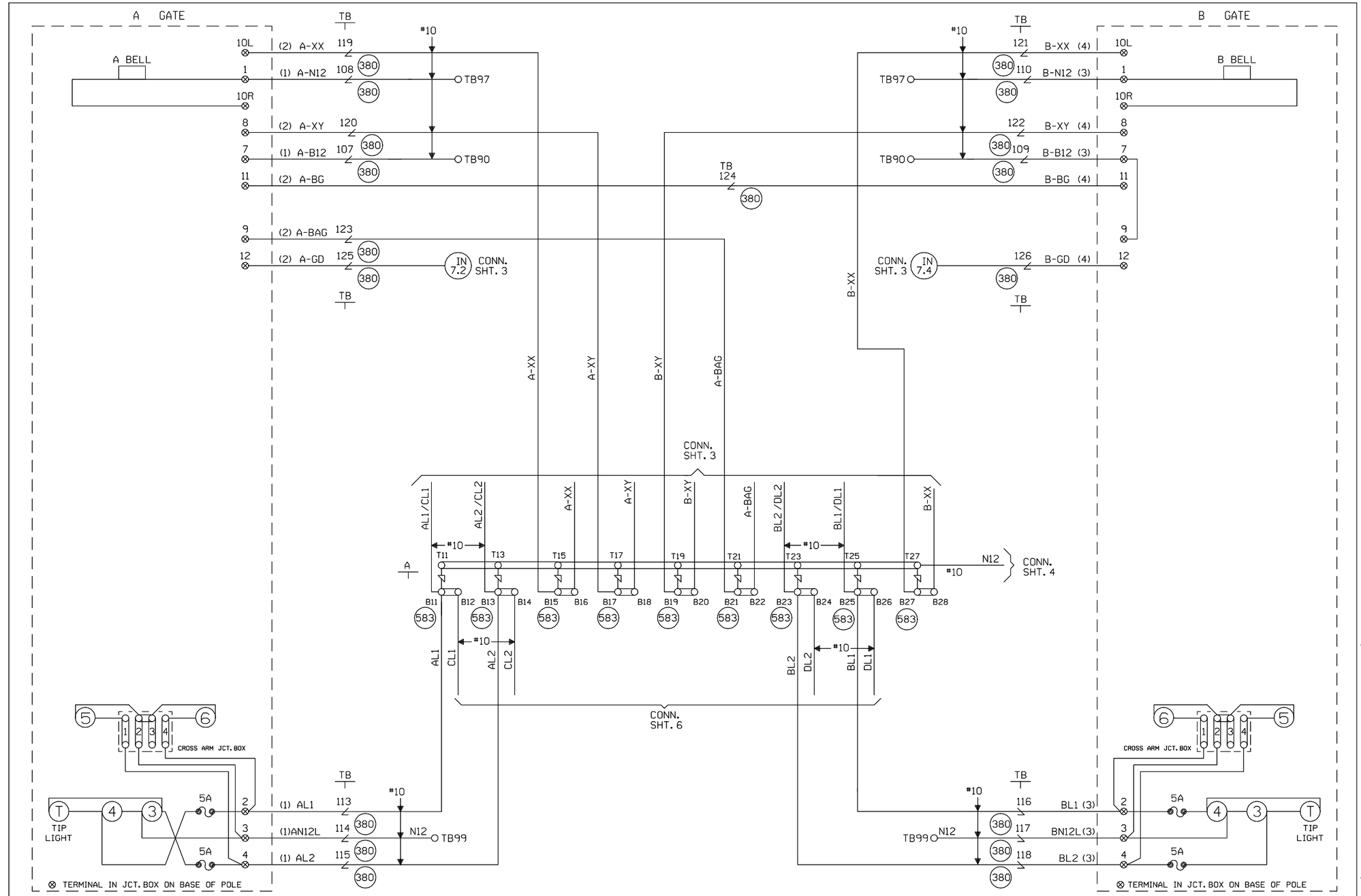

CABLE TABULATION

CABLE NO. 1 5C. NO.6 U.G.B.T. TO GATE A
CABLE NO. 2 7C. NO.14 U.G.B.T. TO GATE A
CABLE NO. 3 5C. NO.6 U.G.B.T. TO GATE B
CABLE NO. 4 7C. NO.14 U.G.B.T. TO GATE B

NEW SHEET

Designed: 03/02/15
INSTALL FLS/GATES, CANTS & CWT AT IL ROUTE 162 M.P. 16.09
Rec*: WO*: 27156
IS: /NDR
/PRS/JTB

MODIFICATION LEVEL	
O. A. LAST LEVEL CHECKED	DU
LAST LEVEL MOD THIS TYPICAL	DU
LAST LEVEL BY DESIGNER	DU
CHANGED FROM TYPICAL?	Y

REV 01.24.11 4K GFCTYP.5

CIRCUIT MODIFICATIONS ARE NOT TO BE MADE WITHOUT AUTHORITY FROM THE OFFICE OF SIGNAL DESIGN

Date: 03/02/15
Des: PRS
Chk: NDR
AFE: 27156

UNION PACIFIC RAILROAD
GRANITE CITY, ILLINOIS
IL ROUTE 162
ALTON & SOUTHERN GATEWAY SUB.
Office of Sr AVP Engineering - Signal/TCO Omaha, Nebraska

Sh.: 5
DOT 846963J
MP: 16.09
ID: 32021609.5X

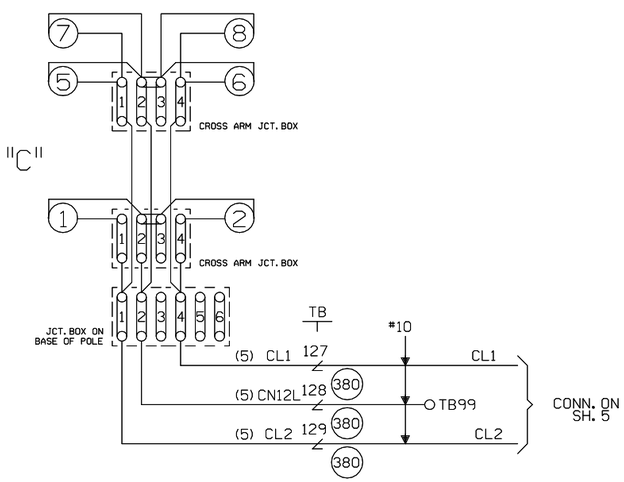

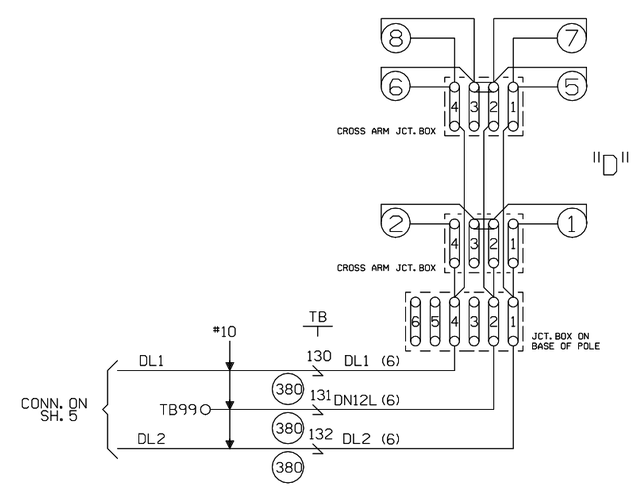

CABLE TABULATION

CABLE NO. 5 5C. NO. 6 U.G.B.T. TO CANT C
CABLE NO. 6 5C. NO. 6 U.G.B.T. TO CANT D

NEW SHEET

Designed: 03/02/15
INSTALL FLS/GATES, CANTS & CWT AT IL ROUTE 162 M.P. 16.09
Rec*: WO*: 27156
IS: /NDR
/PRS/JTB

MODIFICATION LEVEL	
O. A. LAST LEVEL CHECKED	DU
LAST LEVEL MOD THIS TYPICAL	DU
LAST LEVEL BY DESIGNER	DU
CHANGED FROM TYPICAL?	Y

REV 01.24.11 4K CGTYP.6

CIRCUIT MODIFICATIONS ARE NOT TO BE MADE WITHOUT AUTHORITY FROM THE OFFICE OF SIGNAL DESIGN

Date: 03/02/15
Des: PRS
Chk: NDR
AFE: 27156

UNION PACIFIC RAILROAD
GRANITE CITY, ILLINOIS
IL ROUTE 162
ALTON & SOUTHERN GATEWAY SUB.
Office of Sr AVP Engineering - Signal/TCO Omaha, Nebraska

Sh.: 6
DOT 846963J
MP: 16.09
ID: 32021609.6X

WCH 3593-E

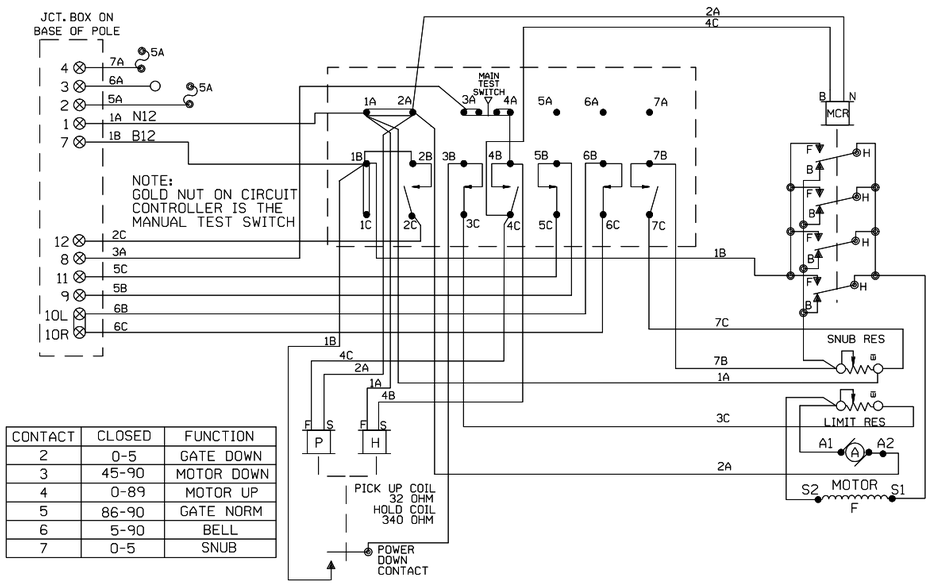

CONTACT	CLOSED	FUNCTION
2	0-5	GATE DOWN
3	45-90	MOTOR DOWN
4	0-89	MOTOR UP
5	86-90	GATE NORM
6	5-90	BELL
7	0-5	SNUB

WCH 3597-E

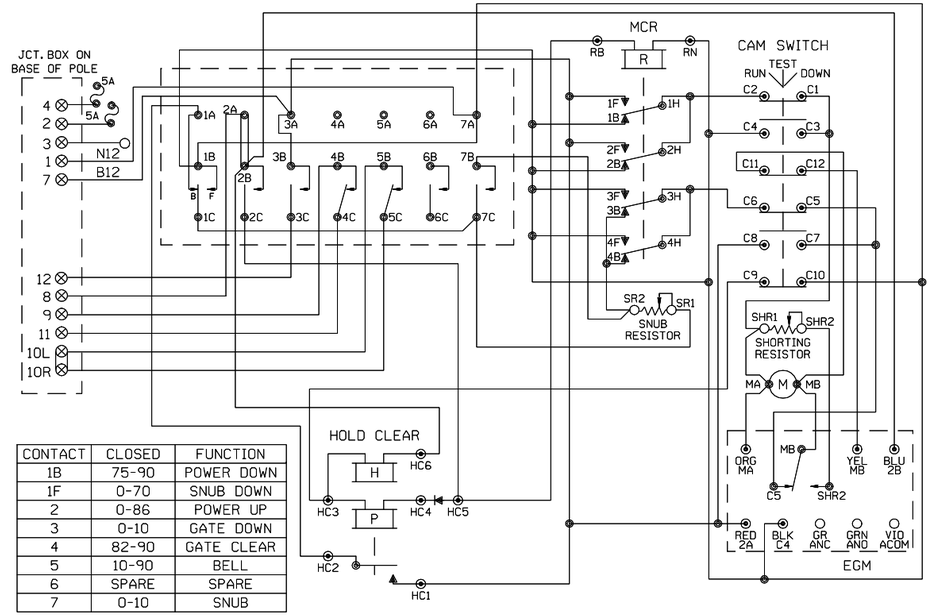

CONTACT	CLOSED	FUNCTION
1B	75-90	POWER DOWN
1F	0-70	SNUB DOWN
2	0-86	POWER UP
3	0-10	GATE DOWN
4	82-90	GATE CLEAR
5	10-90	BELL
6	SPARE	SPARE
7	0-10	SNUB

WCH 3597-RB

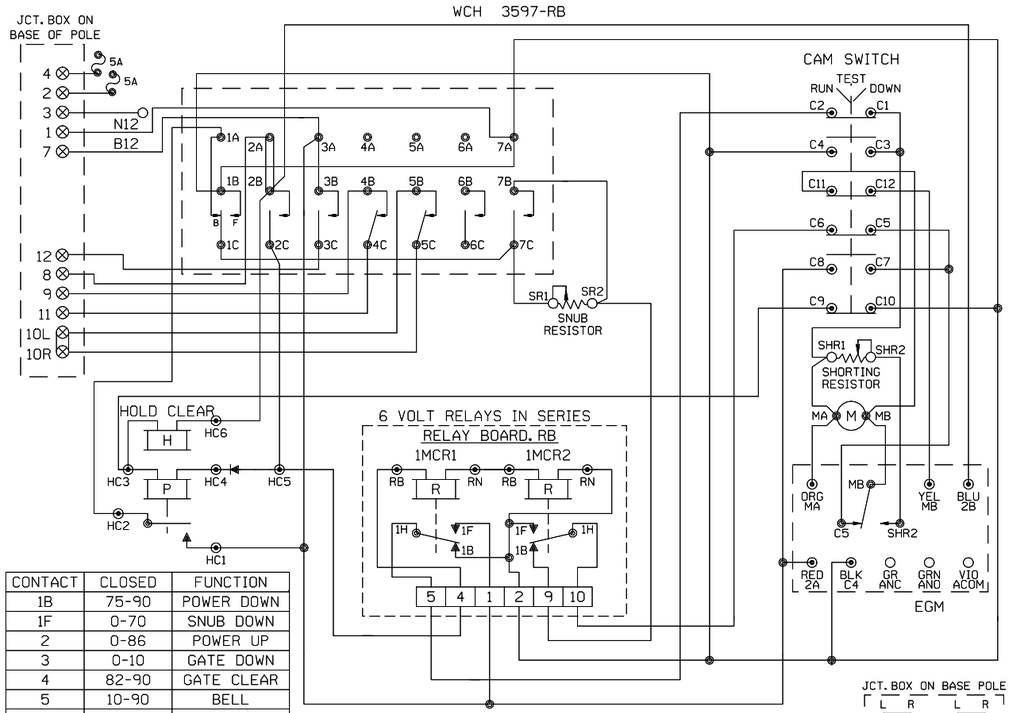

CONTACT	CLOSED	FUNCTION
1B	75-90	POWER DOWN
1F	0-70	SNUB DOWN
2	0-86	POWER UP
3	0-10	GATE DOWN
4	82-90	GATE CLEAR
5	10-90	BELL
6	SPARE	SPARE
7	0-10	SNUB

JCT. BOX ON BASE POLE

L	R	L	R
1		7	
2		8	
3		9	
4		10	
5		11	
6		12	

SHOW TYPE MECH. INSTALLED

ALL MECHANISMS SHOWN IN THE CLEAR POSITION

SAFETRAN S-60

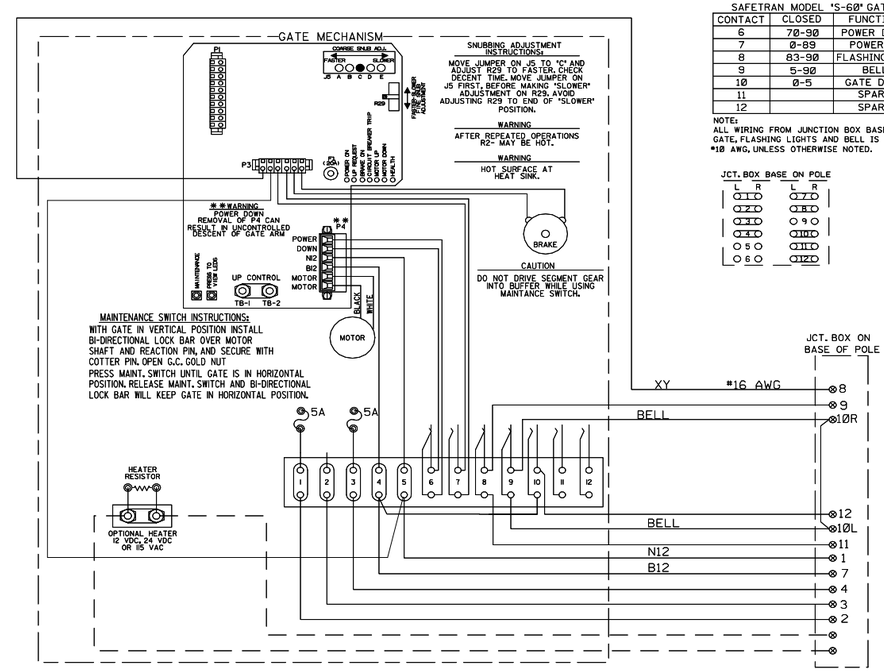

SAFETRAN MODEL 'S-60' GATE

CONTACT	CLOSED	FUNCTION
6	70-90	POWER DOWN
7	0-89	POWER UP
8	83-90	FLASHING LGT.
9	5-90	BELL
10	0-5	GATE DOWN
11		SPARE
12		SPARE

NOTE:
ALL WIRING FROM JUNCTION BOX BASE TO GATE, FLASHING LIGHTS AND BELL IS TO BE #10 AWG, UNLESS OTHERWISE NOTED.

JCT. BOX BASE ON POLE

L	R	L	R
1		7	
2		8	
3		9	
4		10	
5		11	
6		12	

NEW SHEET

Designed: 03/02/15
INSTALL FLS/GATES, CANTS & CWT AT IL ROUTE 162 M.P. 16.09
Rec#: 1St
WO#: 27156 /NDR
/PRS/JTB

MODIFICATION LEVEL

O. A. LAST LEVEL CHECKED	DU
LAST LEVEL MOD THIS TYPICAL	DU
LAST LEVEL BY DESIGNER	DU
CHANGED FROM TYPICAL?	N

REV 01.24.11 4K GWIRING.7

CIRCUIT MODIFICATIONS ARE NOT TO BE MADE WITHOUT AUTHORITY FROM THE OFFICE OF SIGNAL DESIGN

Date: 03/02/15
Des: PRS
Chk: NDR
AFE: 27156

UNION PACIFIC RAILROAD
GRANITE CITY, ILLINOIS
IL ROUTE 162
ALTON & SOUTHERN GATEWAY SUB.
Office of Sr AVP Engineering - Signal/TCO Omaha, Nebraska

Sh.: 7
DOT 846963J
MP: 16.09
ID: 32021609.7X

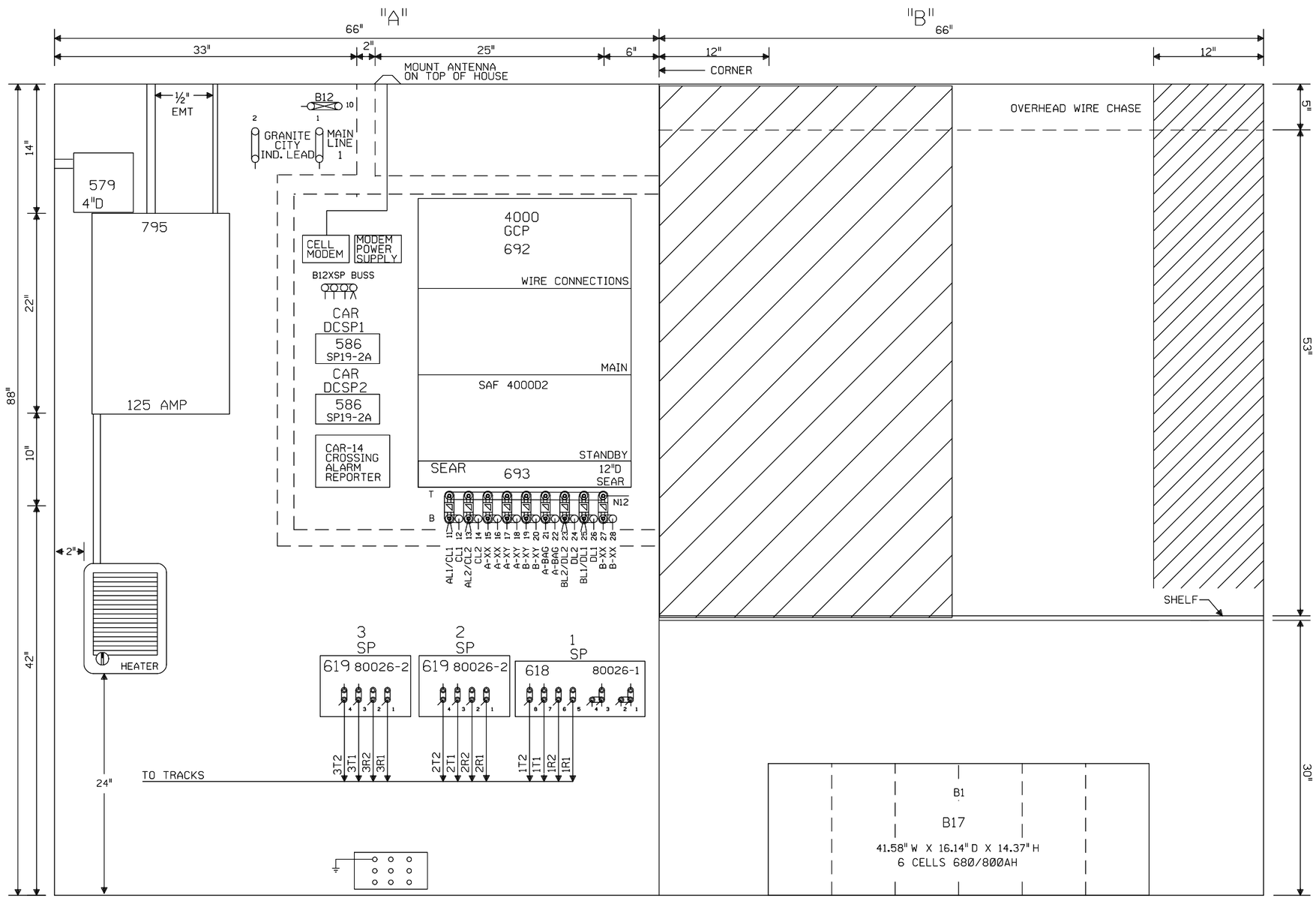

6X6 WAYSIDE/XING HOUSE WITH BLOWER U.P. PART#520-????

NOTE: ALL DIMENSIONS SHOWN ARE APPROXIMATE.

NEW SHEET

Designed: 03/02/15
INSTALL FLS/GATES, CANTS & CWT AT IL ROUTE 162 M.P. 16.09
Rec#: WO#: 27156
IS: /NDR /PRS/JTB

MODIFICATION LEVEL	
Q. A. LAST LEVEL CHECKED	DU
LAST LEVEL MOD THIS TYPICAL	DU
LAST LEVEL BY DESIGNER	DU
CHANGED FROM TYPICAL?	Y

rev 01.24.11 4K 4TKGFC.8

CIRCUIT MODIFICATIONS ARE NOT TO BE MADE WITHOUT AUTHORITY FROM THE OFFICE OF SIGNAL DESIGN

Date: 03/02/15
Des: PRS
Chk: NDR
AFE: 27156

UNION PACIFIC RAILROAD

GRANITE CITY, ILLINOIS
IL ROUTE 162
ALTON & SOUTHERN GATEWAY SUB.

Office of Sr AVP Engineering - Signal/TCO Omaha, Nebraska

Sh.: 8
DOT 846963J
MP: 16.09
ID: 32021609.8X

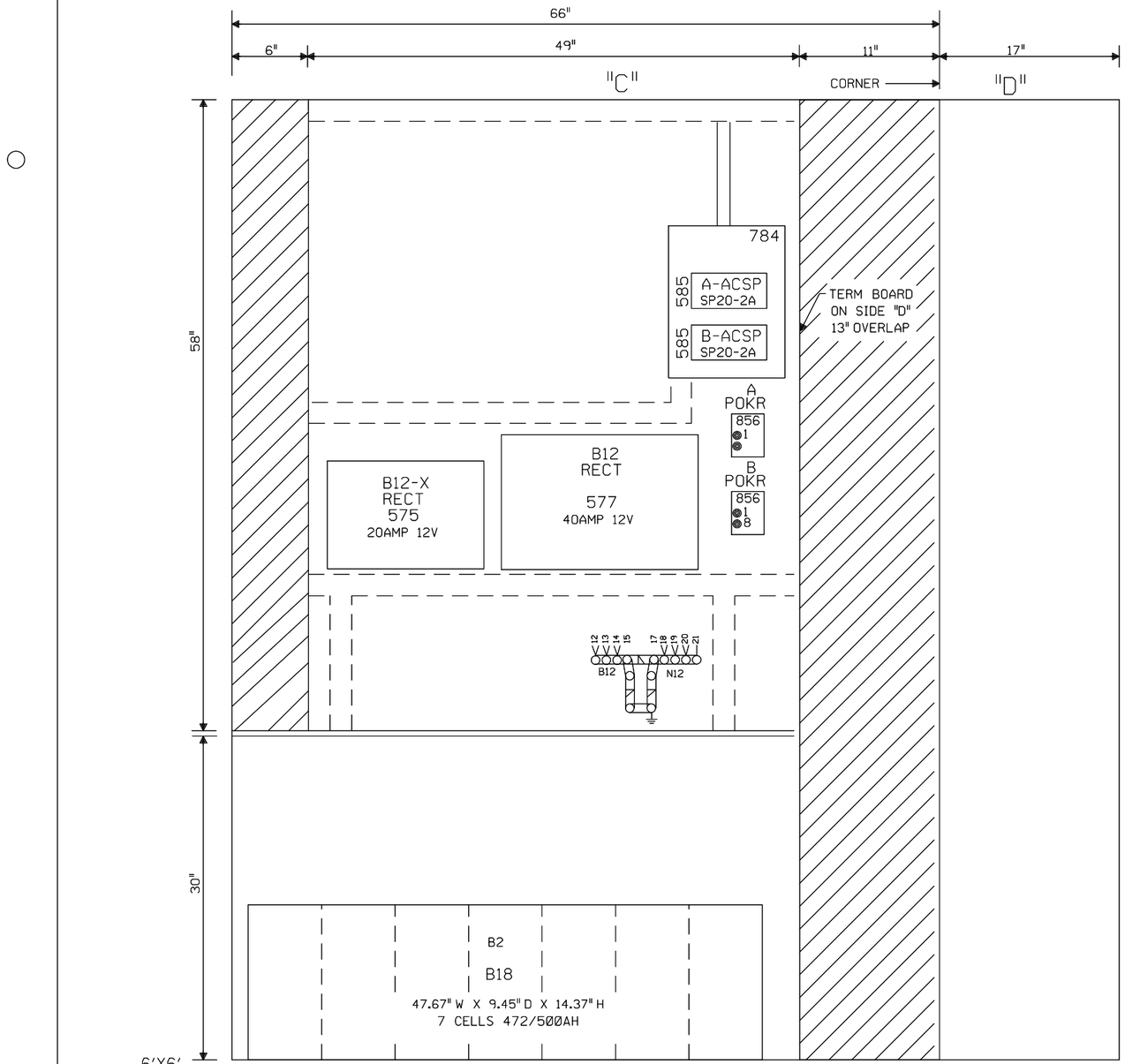

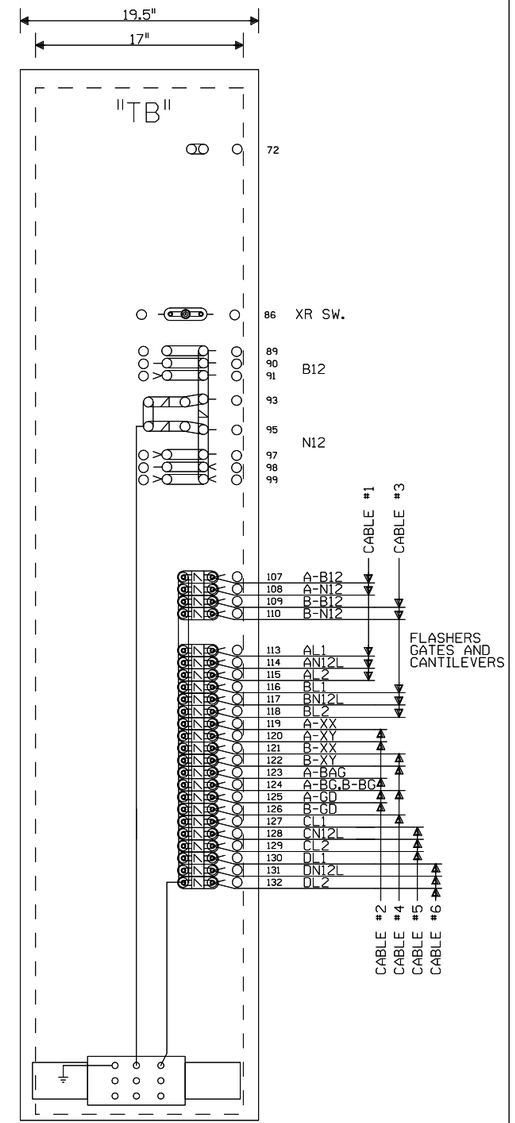

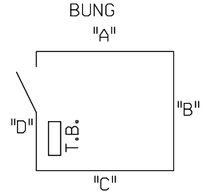

NOTE: NO TEST LINKS TO BE INSTALLED WITH CROSSING LIGHTING OR GATE MECH CIRCUITRY

NOTE: ALL DIMENSIONS SHOWN ARE APPROXIMATE.

NEW SHEET

Designed: 03/02/15

INSTALL FLS/GATES, CANTS & CWT AT IL ROUTE 162 M.P. 16.09

Rec'd: WO#: 27156
IS: /NDR
/ /PRS/JTB

MODIFICATION LEVEL	
O.A. LAST LEVEL CHECKED	DU
LAST LEVEL MOD THIS TYPICAL	DU
LAST LEVEL BY DESIGNER	DU
CHANGED FROM TYPICAL?	Y
rev 01.24.11 4K GFC.9	

CIRCUIT MODIFICATIONS ARE NOT TO BE MADE WITHOUT AUTHORITY FROM THE OFFICE OF SIGNAL DESIGN

Date: 03/02/15
Des: PRS
Chk: NDR
AFE: 27156

UNION PACIFIC RAILROAD

GRANITE CITY, ILLINOIS
IL ROUTE 162
ALTON & SOUTHERN GATEWAY SUB.

Office of Sr AVP Engineering - Signal/TCO Omaha, Nebraska

Sh.: 9
DOT 846963J
MP: 16.09
ID: 32021609.9X