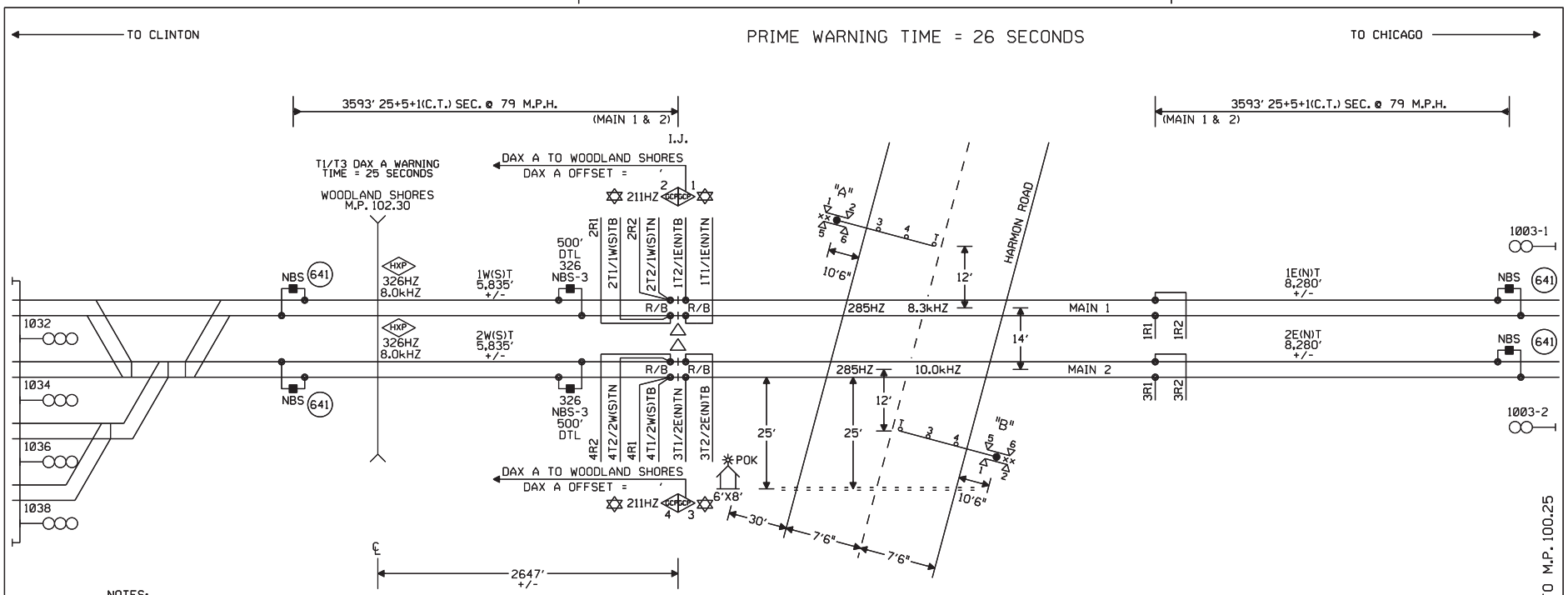

NOTES:

⊗ = TWISTED WIRES
INSULATED 1 TWIST PER FT.
ALL TRACK WIRES 2C. #6

TRANSMITTER AND RECEIVER LEADS TO BE SEPARATED BY AT LEAST 12" IN TRENCH, LENGTHS SHOULD NOT EXCEED MANUFACTURES RECOMMENDATION.

TOP OF FOUNDATION TO BE AT SAME ELEVATION AS THE SURFACE OF THE TRAVELED WAY & NO MORE THAN 4" ABOVE THE SURFACE OF THE GROUND.

ALL BUNGALOW WIRING TO BE #16 AWG FLEX UNLESS OTHERWISE SPECIFIED EXCEPT ALL GROUND WIRE TO BE #6 AWG FLEX OR LARGER.

ALL WIRING IN GATE MECHANISM TO BE #10 "AWG FLEX".

REFER TO UP STANDARD DWG FOR BUNGALOW GROUNDING.

PORTABLE GENERATOR EXTENSION CORD FOR 240V TO 240V IS PROVIDED AS WELL AS A 120V TO 240V ADAPTER.

ALL LIGHTS TO BE 12" ROUNDELS.

= = = = = = 4" X 50' CONDUIT

LIGHTS: LED LIGHTS

GATE A: 16'
GATE B: 16'

xx = BELL

✡ = GCP TO OPERATE IN SEMI-BI DIRECTIONAL MODE. USE TAB 627 COUPLER.

△ = ENSURE TRACK POLARITY IS TRANSPOSED ACROSS ALL INSULATED JOINTS.

TRK 1 ISLAND DISTANCE 121' MINIMUM 120' REQUIRED

TRK 2 ISLAND DISTANCE 121' MINIMUM 120' REQUIRED

PREFERRED ISLAND WIRE CONNECTIONS ARE A MINIMUM 50' FROM EDGE OF ROAD

OFFSET AND ISLAND DISTANCES TO BE VERIFIED BY FIELD

W(S) ←—○—→ E(N)

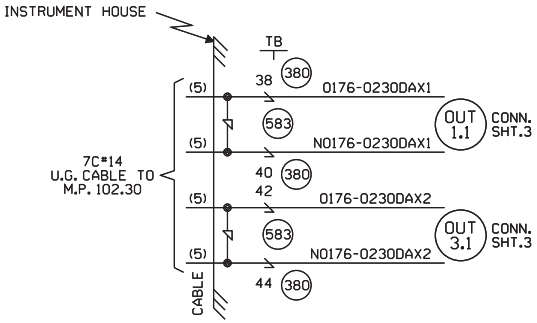

CONSTRUCTION NOTES:

1. ORDER AND INSTALL (4) 211HZ TRACK FILTERS (TAB 729): (2) AT M.P. 102.99 AND (2) AT THIS LOCATION.
2. ORDER AND INSTALL (2) MICROLOK HALFBOXES (TAB 295) AT THIS LOCATION.
3. ORDER AND INSTALL (4) CAB 4-100 UNITS (TAB 545) AT THIS LOCATION.
4. ORDER AND INSTALL (6) AC ISOLATION FILTERS (TAB 722A): (2) AT M.P. 102.99 AND (4) AT THIS LOCATION.
5. ORDER AND INSTALL (1) AND GATE (TAB 930) AT M.P. 102.30.
6. ORDER AND INSTALL (2) 141# INSULATED JOINTS 50' FROM EDGE OF ROADWAY ON MAIN 1 AT THIS LOCATION.
7. ORDER AND INSTALL (2) 136# INSULATED JOINTS 50' FROM EDGE OF ROADWAY ON MAIN 2 AT THIS LOCATION.
8. ORDER AND INSTALL 2800' 7C#14 CABLE FOR DAX TO M.P. 102.30.
9. CHANGE HXP FREQUENCY ON MAIN 1 AND 2 AT M.P. 102.30 FROM 267HZ TO 326HZ.
10. FINAL CABIN PLACEMENT TO BE VERIFIED BY THE ICC.
11. PLACE GATES 18' FROM CENTERLINE OF ROAD PER ICC.

CABLE TABULATION

CABLE NO. 5 7C#14 U.G.B.T. HOUSE TO M.P. 102.30

NEW SHEET

Designed: 01/06/15
INSTALL FLASHERS W/GATES & CWT M.P. 101.76 HARMON ROAD
Rec#: WO#: 27689
IS: /NDR /XRL /JTB

MODIFICATION LEVEL	
D. A. LAST LEVEL CHECKED	DU
LAST LEVEL MOD THIS TYPICAL	DU
LAST LEVEL BY DESIGNER	DU
CHANGED FROM TYPICAL?	Y

rev 01.24.11 4K 2TKUGTYP.1

CIRCUIT MODIFICATIONS ARE NOT TO BE MADE WITHOUT AUTHORITY FROM THE OFFICE OF SIGNAL DESIGN

Date: 01/06/15
Des: XRL
Chk: NDR
AFE: 27689

UNION PACIFIC RAILROAD
DIXON, ILLINOIS
HARMON ROAD
GENEVA SUBDIVISION
Office of AVP Engineering - Signal Omaha, Nebraska

Sh.: 1
DOT 175159D
MP: 101.76
ID: GEN10176.IX

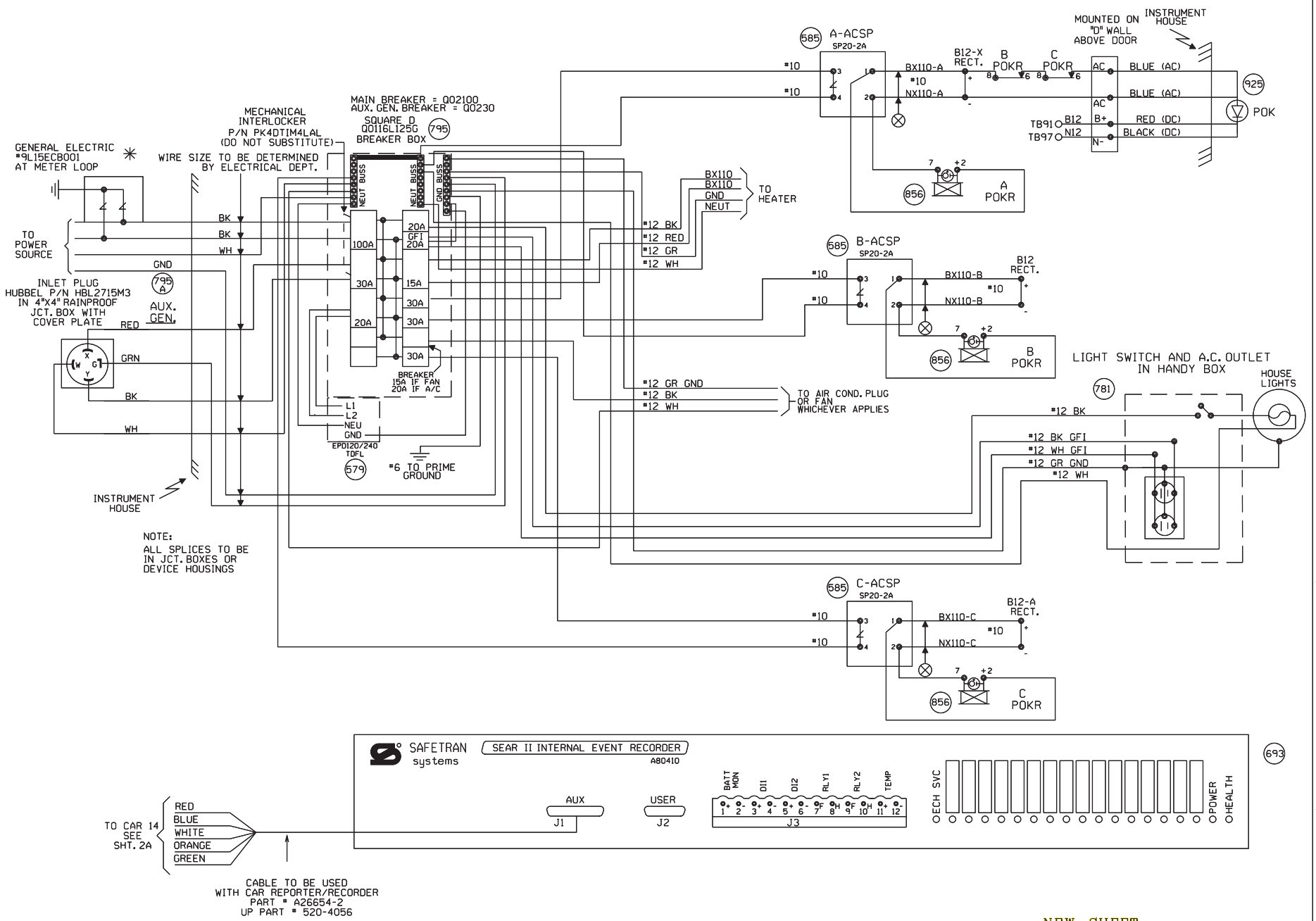

NEW SHEET

					Designed: 01/06/15 INSTALL FLASHERS W/GATES & CWT M.P. 101.76 HARMON ROAD Rec#: WO#: 27689 IS: /NBT / /XRL/JTB	MODIFICATION LEVEL Q.A. LAST LEVEL CHECKED DU LAST LEVEL MOD THIS TYPICAL DU LAST LEVEL BY DESIGNER DU CHANGED FROM TYPICAL? Y REV 01.24.11 4K SEARAC.2	CIRCUIT MODIFICATIONS ARE NOT TO BE MADE WITHOUT AUTHORITY FROM THE OFFICE OF SIGNAL DESIGN	Date: 01/06/15 Des: XRL Chk: NBT AFE: 27689	UNION PACIFIC RAILROAD DIXON, ILLINOIS HARMON ROAD GENEVA SUBDIVISION Office of AVP Engineering - Signal Omaha, Nebraska	Sh.: 2 DOT 175159D MP: 101.76 ID: GEN10176.2X

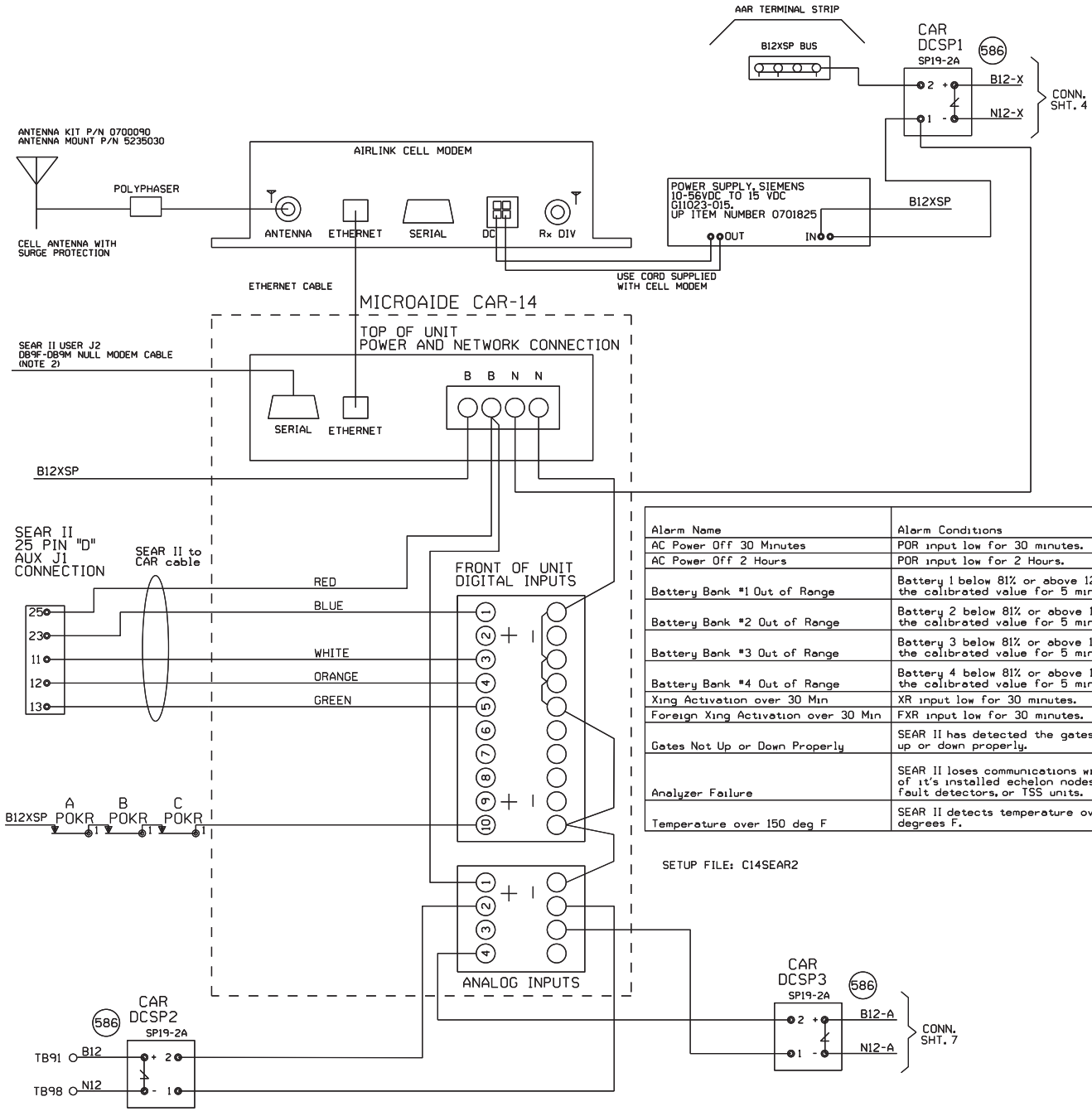

NOTE:
1) DO NOT JUMPER UNUSED INPUTS
2) THE CAR14 SERIAL PORT IS AVAILABLE TO ADD REMOTE CONNECTIVITY TO EXISTING LOGGING EQUIPMENT. USE NULL MODEM CABLE WITH SHIELDING DISCONNECTED AT ONE OR BOTH SIDES.

ANALOG INPUTS:
A1) B12X BATTERY BANK
A2) B12 BATTERY BANK
A3) BATTERY BANK 3
A4) BATTERY BANK 4

DIGITAL INPUTS
D1) XR (BLUE WIRE)
D2) FOREIGN XR
D3) ANALYZER FAILURE (WHITE WIRE)
D4) HIGH TEMPERATURE (ORANGE WIRE)
D5) GATES NOT UP OR DOWN PROPERLY (GREEN WIRE)
D10) POWER OFF INDICATION

Alarm Name	Alarm Conditions	Alarm Clearing Conditions	Cleared by Maintainer Mode?
AC Power Off 30 Minutes	POR input low for 30 minutes.	POR input high for 5 minutes.	No
AC Power Off 2 Hours	POR input low for 2 Hours.	POR input high for 5 minutes.	No
Battery Bank #1 Out of Range	Battery 1 below 81% or above 120% of the calibrated value for 5 minutes.	Battery 1 within acceptable range for 5 minutes.	No
Battery Bank #2 Out of Range	Battery 2 below 81% or above 120% of the calibrated value for 5 minutes.	Battery 2 within acceptable range for 5 minutes.	No
Battery Bank #3 Out of Range	Battery 3 below 81% or above 120% of the calibrated value for 5 minutes.	Battery 3 within acceptable range for 5 minutes.	No
Battery Bank #4 Out of Range	Battery 4 below 81% or above 120% of the calibrated value for 5 minutes.	Battery 4 within acceptable range for 5 minutes.	No
Xing Activation over 30 Min	XR input low for 30 minutes.	XR input high for 10 seconds.	Yes
Foreign Xing Activation over 30 Min	FXR input low for 30 minutes.	FXR input high for 10 seconds.	Yes
Gates Not Up or Down Properly	SEAR II has detected the gates are not up or down properly.	SEAR II has detected the gates are up or down properly.	No
Analyzer Failure	SEAR II loses communications with any of it's installed echelon nodes, ground fault detectors, or TSS units.	SEAR II has recovered after an analyzer failure alarm.	No
Temperature over 150 deg F	SEAR II detects temperature over 150 degrees F.	SEAR II sensor detects temperature is OK after a High-Temp alarm.	No

SETUP FILE: C14SEAR2

NEW SHEET

Designed: 01/06/15
INSTALL FLASHERS
W/GATES & CWT
M.P. 101.76
HARMON ROAD
Rec#: WO#: 27689
IS: /NBT
/ /XRL/JTB

MODIFICATION LEVEL	
Q.A. LAST LEVEL CHECKED	DU
LAST LEVEL MOD THIS TYPICAL	DU
LAST LEVEL BY DESIGNER	DU
CHANGED FROM TYPICAL?	Y

mv 01.24.11 4K ACDCCAR14S11.3

CIRCUIT MODIFICATIONS ARE NOT TO BE MADE WITHOUT AUTHORITY FROM THE OFFICE OF SIGNAL DESIGN

Date: 01/06/15
Des: XRL
Chk: NBT
AFE: 27689

UNION PACIFIC RAILROAD
DIXON, ILLINOIS
HARMON ROAD
GENEVA SUBDIVISION
Office of AVP Engineering - Signal Omaha, Nebraska

Sh.: 2A
DOT 1751590
MP: 101.76
ID: GEN10176.2AX

Minimum Program Steps Report

Location and SIN

DOT Number: 175159D
Milepost Number: 101.76
Site Name: Dixon, IL

SIN: 762010010016 *

* Parameter is part of office check number calculation.

MCF and Template Selection

MCF Name: GCP-T6X-02-6.mcf
MCF Revision: 26
MCFCRC: 494D2656

Template = 1D:3 Uni pairs (OCCN) *

* Parameter is part of office check number calculation.

Minimum Program Steps

MS4000 configuration
Track 1 : GCP Frequency = 285 Hz (OCCN,TCN) (Hidden) *
Track 1 : Uni/Bi/Sim-Bidirnl = Sim. Bidirnl (OCCN,TCN) (Hidden) *
Track 1 : Isl Frequency = 8.3 kHz (OCCN) (Hidden) *
Track 1 : Pickup Delay (2s +) = 2 sec (OCCN) (Hidden) *
IN 1.2 = Out Of Service IP 1 (OCCN) (Hidden) *

MS4000 Predictor
Track 1 : Prime Warning Time = 26 sec (OCCN) (Hidden) *

BASIC: module configuration
Track 3/PSO 2 Slot = Track (OCCN) *
Track 4/PSO 3 Slot = Track (OCCN) *

PREDICTORS: track 1
Track 1 : Dax A Used = Yes (OCCN) *

PREDICTORS: track 3
Track 3 : Dax A Used = Yes (OCCN) *

GCP: track 1
Track 1 : GCP Frequency = 285 Hz (OCCN,TCN) *
Track 1 : Approach Distance = 3593 ft (OCCN,TCN) *
Track 1 : Uni/Bi/Sim-Bidirnl = Sim. Bidirnl (OCCN,TCN) *
Track 1 : Island Distance = 121 ft (Set in Field,TCN)

GCP: track 1 prime
Track 1 : Prime Warning Time = 26 sec (OCCN) *

GCP: track 1 Dax A
Track 1 : Dax A Warning Time = 25 sec (OCCN) *
Track 1 : Dax A Offset Distance = 2718 ft (OCCN) *

GCP: track 2
Track 2 : GCP Frequency = 211 Hz (OCCN,TCN) *
Track 2 : Approach Distance = 3593 ft (OCCN,TCN) *
Track 2 : Uni/Bi/Sim-Bidirnl = Sim. Bidirnl (OCCN,TCN) *

```
GCP:  track 2 prime
Track 2 : Prime Warning Time = 26 sec (OCCN) *

GCP:  track 3
Track 3 : GCP Frequency = 285 Hz (OCCN,TCN) *
Track 3 : Approach Distance = 3593 ft (OCCN,TCN) *
Track 3 : Uni/Bi/Sim-Bidirnl = Sim. Bidirnl (OCCN,TCN) *
Track 3 : Island Distance = 121 ft (Set in Field,TCN)

GCP:  track 3 prime
Track 3 : Prime Warning Time = 26 sec (OCCN) *

GCP:  track 3 Dax A
Track 3 : Dax A Warning Time = 25 sec (OCCN) *
Track 3 : Dax A Offset Distance = 2718 ft (OCCN) *

GCP:  track 4
Track 4 : GCP Frequency = 211 Hz (OCCN,TCN) *
Track 4 : Approach Distance = 3593 ft (OCCN,TCN) *
Track 4 : Uni/Bi/Sim-Bidirnl = Sim. Bidirnl (OCCN,TCN) *

GCP:  track 4 prime
Track 4 : Prime Warning Time = 26 sec (OCCN) *

ISLAND:  track 1
Track 1 : Isl Frequency = 8.3 kHz (OCCN) *
Track 1 : Pickup Delay (2s +) = 2 sec (OCCN) *

ISLAND:  track 3
Track 3 : Isl Frequency = 10.0 kHz (OCCN) *
Track 3 : Pickup Delay (2s +) = 2 sec (OCCN) *

AND:  AND 1 XR
AND 1 Enable Used = Yes (OCCN) *

ADVANCED:  out of service
OOS Control = OOS IPs (OCCN) *

ADVANCED:  out of service 2
T2 OOS Control = OOS Input 1 (OCCN) *
T4 OOS Control = OOS Input 3 (OCCN) *

OUTPUT:  assignment page 1
OUT 1.1 = T1 Dax A (OCCN) *
OUT 3.1 = T3 Dax A (OCCN) *

INPUT:  assignment page 1
IN 1.2 = Out Of Service IP 1 (OCCN) *
IN 3.2 = Out Of Service IP 3 (OCCN) *

IO:  assignment SSCC
IN 7.1 = AND 1 XR Enable (OCCN) *

Express: MS4000 configuration
Track 1 : GCP Frequency = 285 Hz (OCCN,TCN) (Hidden) *
Track 1 : Uni/Bi/Sim-Bidirnl = Sim. Bidirnl (OCCN,TCN) (Hidden) *
Track 1 : Pickup Delay (2s +) = 2 sec (OCCN) (Hidden) *
IN 1.2 = Out Of Service IP 1 (OCCN) (Hidden) *

Express: MS4000 Predictor
Track 1 : Prime Warning Time = 26 sec (OCCN) (Hidden) *

* Parameter is part of office check number calculation.
```

```
Check Numbers
-------------
Office Check Number: 4C5E6C88
Config. Check Number: 159B2A5A
(Based on MCF Revision 26)

Parameters not part of office check number calculation:

Track 1 : Island Distance = 121 ft (Set in Field)
Track 3 : Island Distance = 121 ft (Set in Field)

Comments
--------
<none>

Configuration Package File
--------------------------
Filename: GEN10176_175159D.pac
Path:
Date/Time: 5/12/2015 8:42:22
DT Version: 5.7.3
```

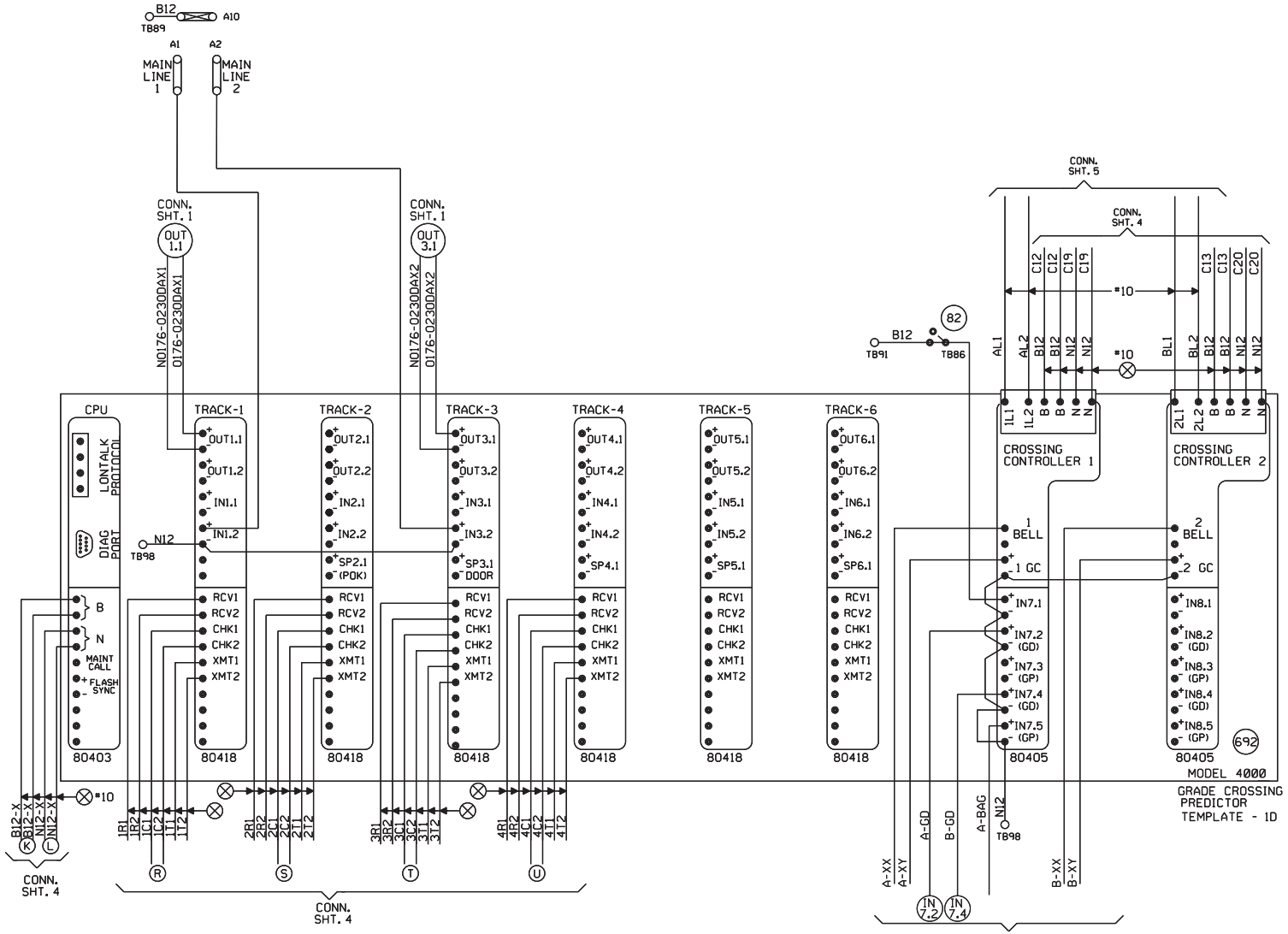

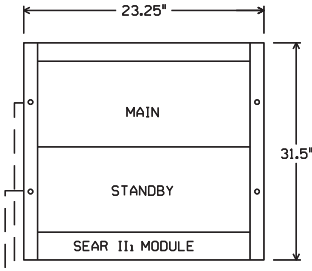

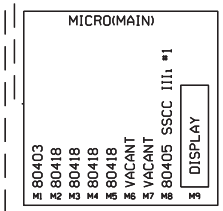

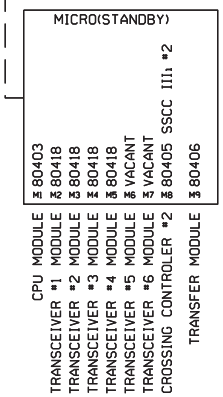

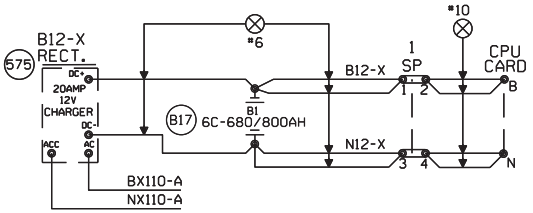

"Mf" FREQUENCY (HZ)	MAXIMUM TRANSMIT WIRE LENGTH (FEET)
86	100
114	125
156	150
211	200
285-970	250

NOTE:
EACH TRANSMITTER TO RAIL WIRE FROM XMT1 AND XMT2 MUST NOT EXCEED THE MAXIMUM LENGTH SPECIFIED IN THE TABLE SHOWN. THE RECEIVER WIRE LENGTH IS NOT CRITICAL. DOES NOT APPLY TO 6 TRACK WIRE APPLICATION.

NEW SHEET

Designed: 01/06/15
INSTALL FLASHERS W/GATES & CWT M.P. 101.76 HARMON ROAD
Rec'd: WO#: 27689 /NBT
IS: / XRL/JTB

MODIFICATION LEVEL	
O.A. LAST LEVEL CHECKED	DU
LAST LEVEL MOD THIS TYPICAL	DU
LAST LEVEL BY DESIGNER	DU
CHANGED FROM TYPICAL?	Y
rev 01.24.11 4K 4TKB4GF.3	

CIRCUIT MODIFICATIONS ARE NOT TO BE MADE WITHOUT AUTHORITY FROM THE OFFICE OF SIGNAL DESIGN

Date: 01/06/15
Des: XRL
Chk: NBT
AFE: 27689

UNION PACIFIC RAILROAD
DIXON, ILLINOIS
HARMON ROAD
GENEVA SUBDIVISION
Office of AVP Engineering - Signal Omaha, Nebraska

Sh.: 3
DOT 1751590
MP: 101.76
ID: GEN10176.3X

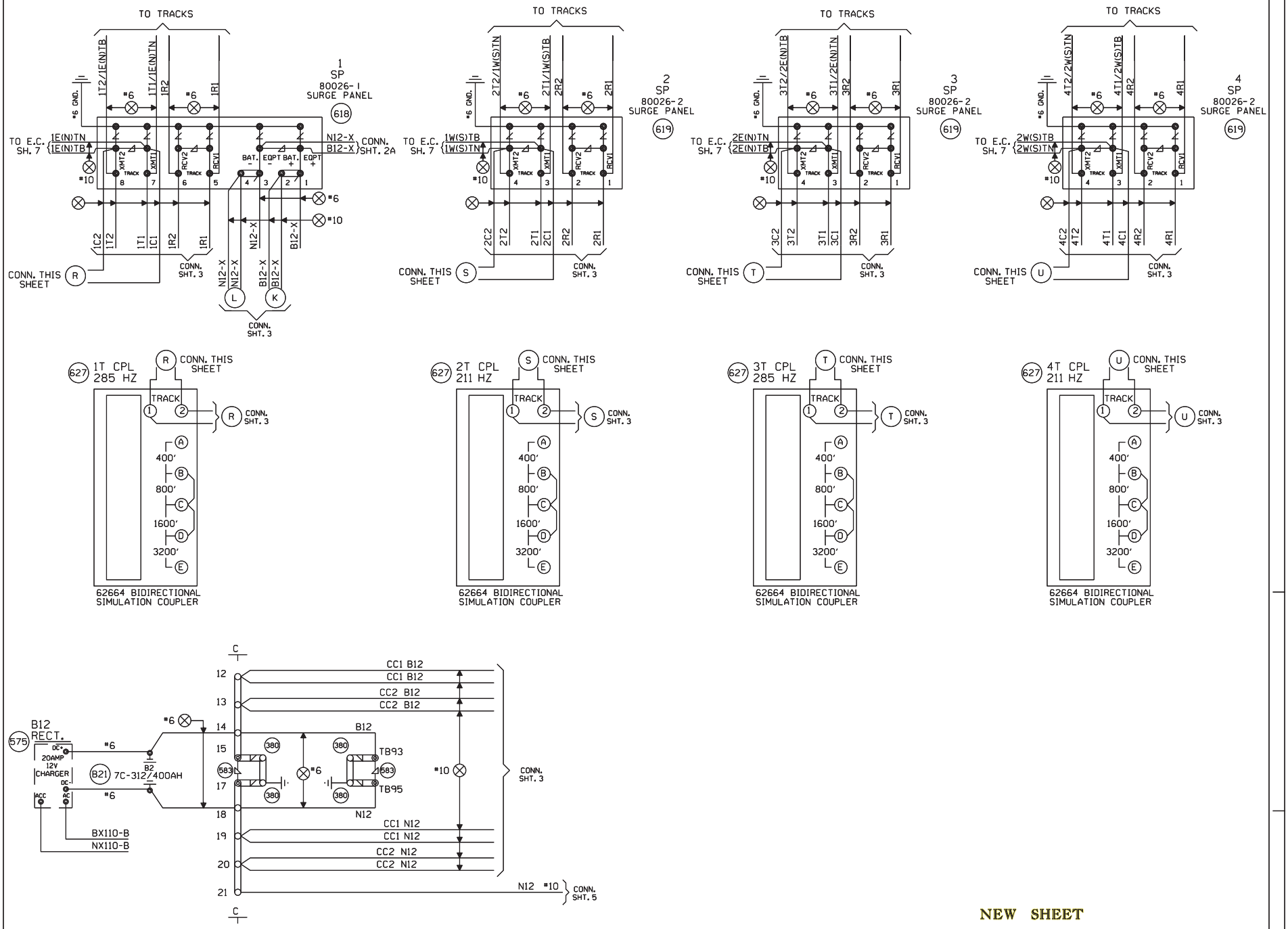

NEW SHEET

					Designed: 01/06/15 INSTALL FLASHERS W/GATES & CWT M.P. 101.76 HARMON ROAD Rec#: WO#: 27689 IS: /NBT / /XRL/JTB	MODIFICATION LEVEL Q.A. LAST LEVEL CHECKED DU LAST LEVEL MOD THIS TYPICAL DU LAST LEVEL BY DESIGNER DU CHANGED FROM TYPICAL? Y REV 01.24.11 4K 4TKSPGFC.4	CIRCUIT MODIFICATIONS ARE NOT TO BE MADE WITHOUT AUTHORITY FROM THE OFFICE OF SIGNAL DESIGN	Date: 01/06/15 Des: XRL Chk: NBT AFE: 27689	UNION PACIFIC RAILROAD DIXON, ILLINOIS HARMON ROAD GENEVA SUBDIVISION Office of AVP Engineering - Signal Omaha, Nebraska	Sh.: 4 DOT 175159D MP: 101.76 ID: GEN10176.4X

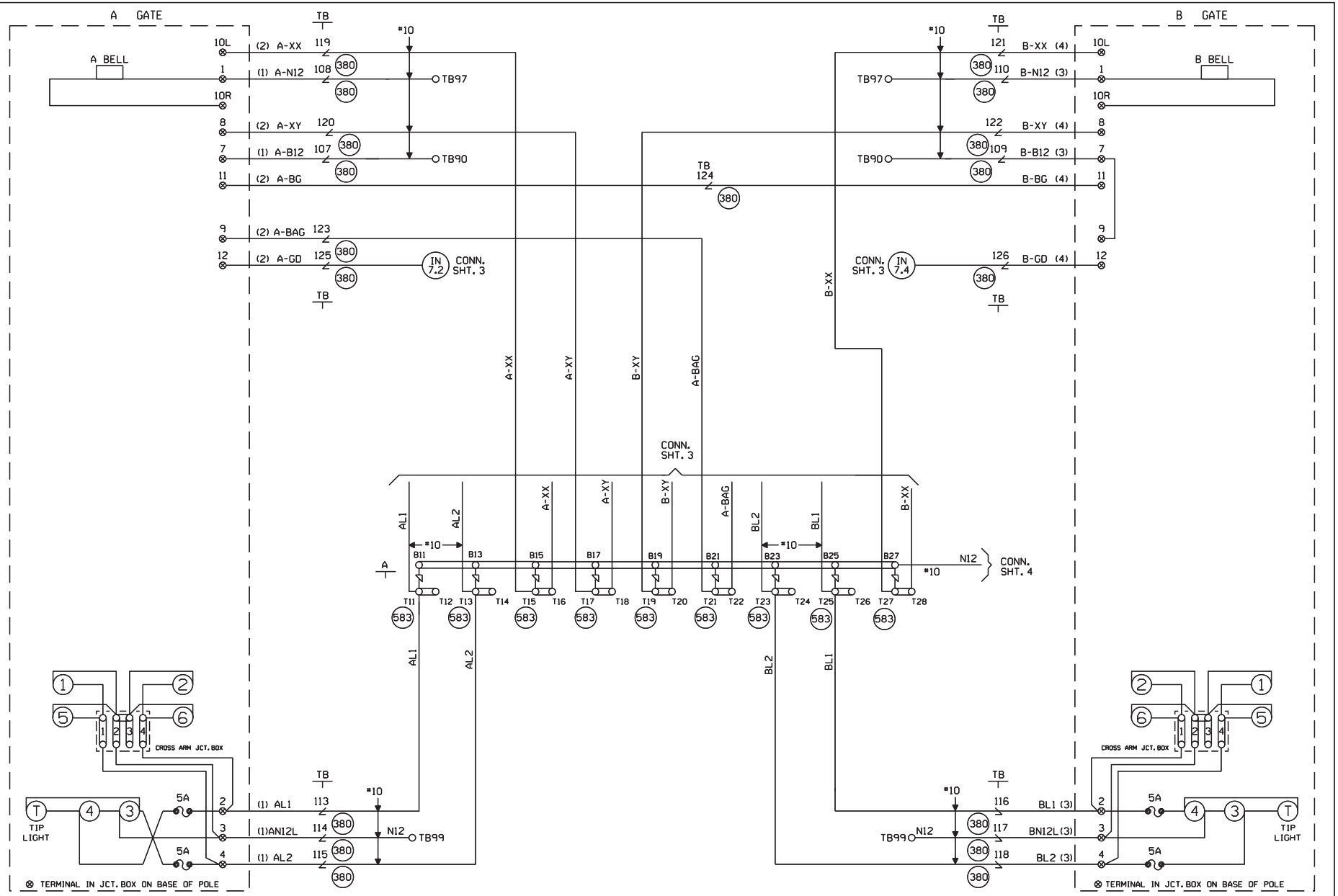

CABLE TABULATION

CABLE NO. 1 5C. NO.6 U.G.B.T. TO GATE A
CABLE NO. 2 7C. NO.14 U.G.B.T. TO GATE A
CABLE NO. 3 5C. NO.6 U.G.B.T. TO GATE B
CABLE NO. 4 7C. NO.14 U.G.B.T. TO GATE B

NEW SHEET

Designed: 01/06/15

INSTALL FLASHERS W/GATES & CWT M.P. 101.76 HARMON ROAD

Rec*: WO*: 27689 /NBT
IS: / XRL/JTB

MODIFICATION LEVEL	
O.A. LAST LEVEL CHECKED	DU
LAST LEVEL MOD THIS TYPICAL	DU
LAST LEVEL BY DESIGNER	DU
CHANGED FROM TYPICAL?	Y
rev 01.24.11 4K GFCTYP.5	

CIRCUIT MODIFICATIONS ARE NOT TO BE MADE WITHOUT AUTHORITY FROM THE OFFICE OF SIGNAL DESIGN

Date: 01/06/15
Des: XRL
Chk: NBT
AFE: 27689

UNION PACIFIC RAILROAD

DIXON, ILLINOIS
HARMON ROAD
GENEVA SUBDIVISION

Office of AVP Engineering - Signal Omaha, Nebraska

Sh.: 5
DOT 1751590
MP: 101.76
ID: GEN10176.5X

WCH 3593-E

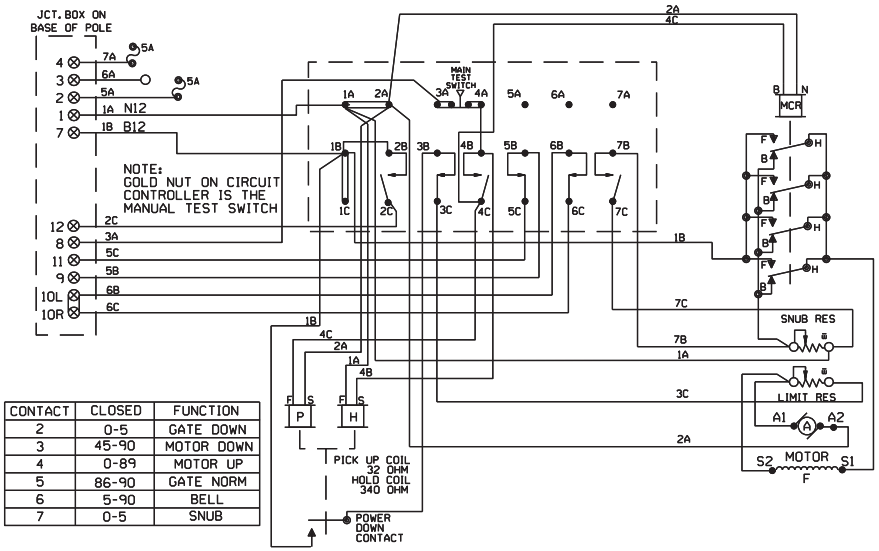

CONTACT	CLOSED	FUNCTION
2	0-5	GATE DOWN
3	45-90	MOTOR DOWN
4	0-89	MOTOR UP
5	86-90	GATE NORM
6	5-90	BELL
7	0-5	SNUB

WCH 3597-E

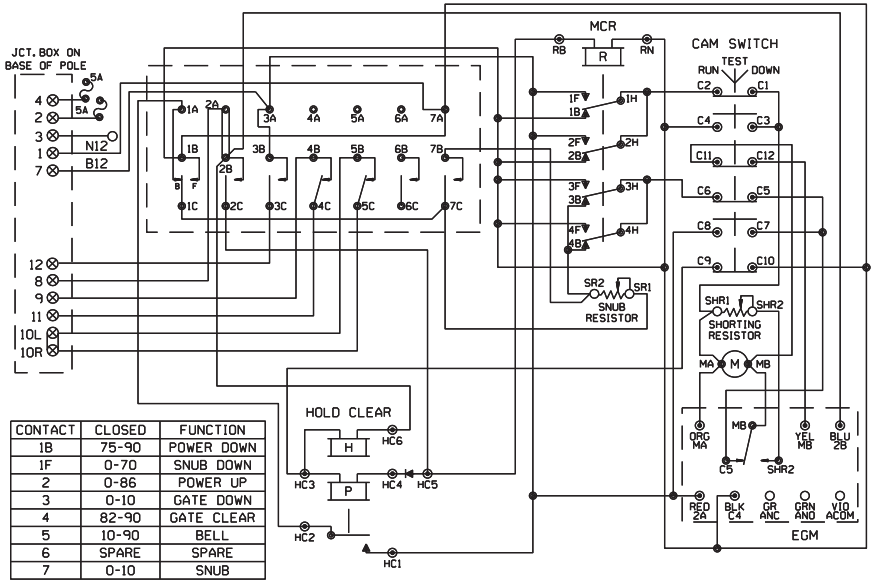

CONTACT	CLOSED	FUNCTION
1B	75-90	POWER DOWN
1F	0-70	SNUB DOWN
2	0-86	POWER UP
3	0-10	GATE DOWN
4	82-90	GATE CLEAR
5	10-90	BELL
6	SPARE	SPARE
7	0-10	SNUB

WCH 3597-RB

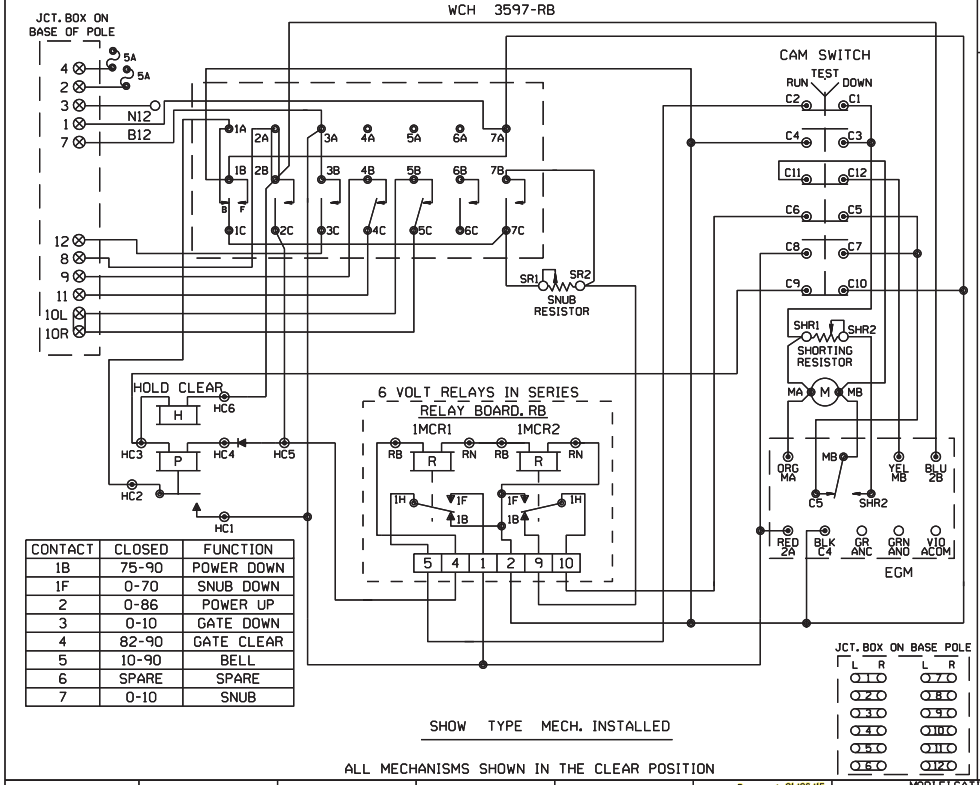

CONTACT	CLOSED	FUNCTION
1B	75-90	POWER DOWN
1F	0-70	SNUB DOWN
2	0-86	POWER UP
3	0-10	GATE DOWN
4	82-90	GATE CLEAR
5	10-90	BELL
6	SPARE	SPARE
7	0-10	SNUB

SHOW TYPE MECH. INSTALLED

ALL MECHANISMS SHOWN IN THE CLEAR POSITION

SAFETRAN S-60

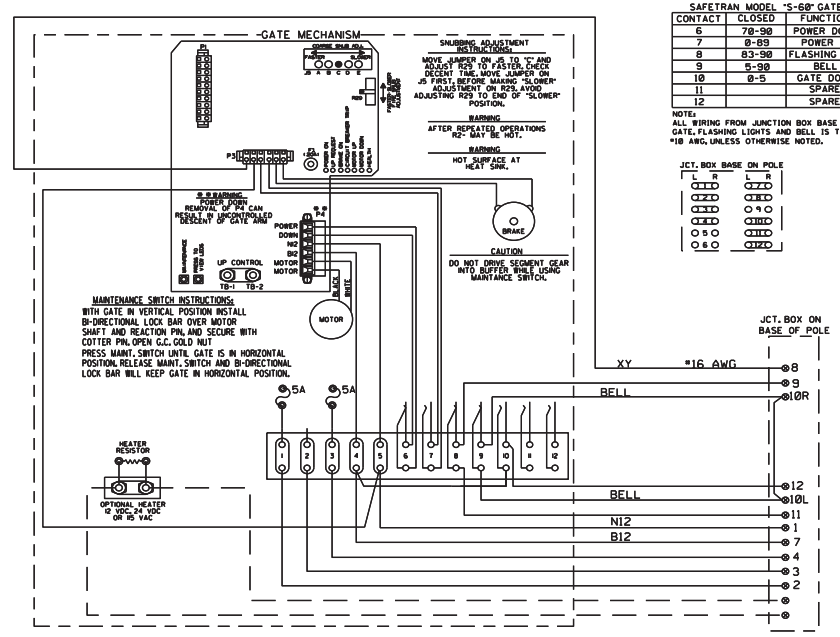

SAFETRAN MODEL "S-60" GATE

CONTACT	CLOSED	FUNCTION
6	70-90	POWER DOWN
7	0-89	POWER UP
8	83-90	FLASHING LGT.
9	5-90	BELL
10	0-5	GATE DOWN
11		SPARE
12		SPARE

NOTE:
ALL WIRING FROM JUNCTION BOX BASE TO GATE. FLASHING LIGHTS AND BELL IS TO BE #10 AWG, UNLESS OTHERWISE NOTED.

JCT. BOX BASE ON POLE

NEW SHEET

Designed: 01/06/15
INSTALL FLASHERS W/GATES & CWT
M.P. 101.76
HARMON ROAD
Rec#: WO#: 27689
IS: /NBT
/XRL/JTB

MODIFICATION LEVEL	
Q.A. LAST LEVEL CHECKED	DU
LAST LEVEL MOD THIS TYPICAL	DU
LAST LEVEL BY DESIGNER	DU
CHANGED FROM TYPICAL?	N

REV 01.24.11 4K GWIRING.7

CIRCUIT MODIFICATIONS ARE NOT TO BE MADE WITHOUT AUTHORITY FROM THE OFFICE OF SIGNAL DESIGN

Date: 01/06/15
Des: XRL
Chk: NBT
AFE: 27689

UNION PACIFIC RAILROAD

DIXON, ILLINOIS
HARMON ROAD
GENEVA SUBDIVISION

Office of AVP Engineering - Signal Omaha, Nebraska

Sh.: 6
DOT 175159D
MP: 101.76
ID: GEN10176.6X

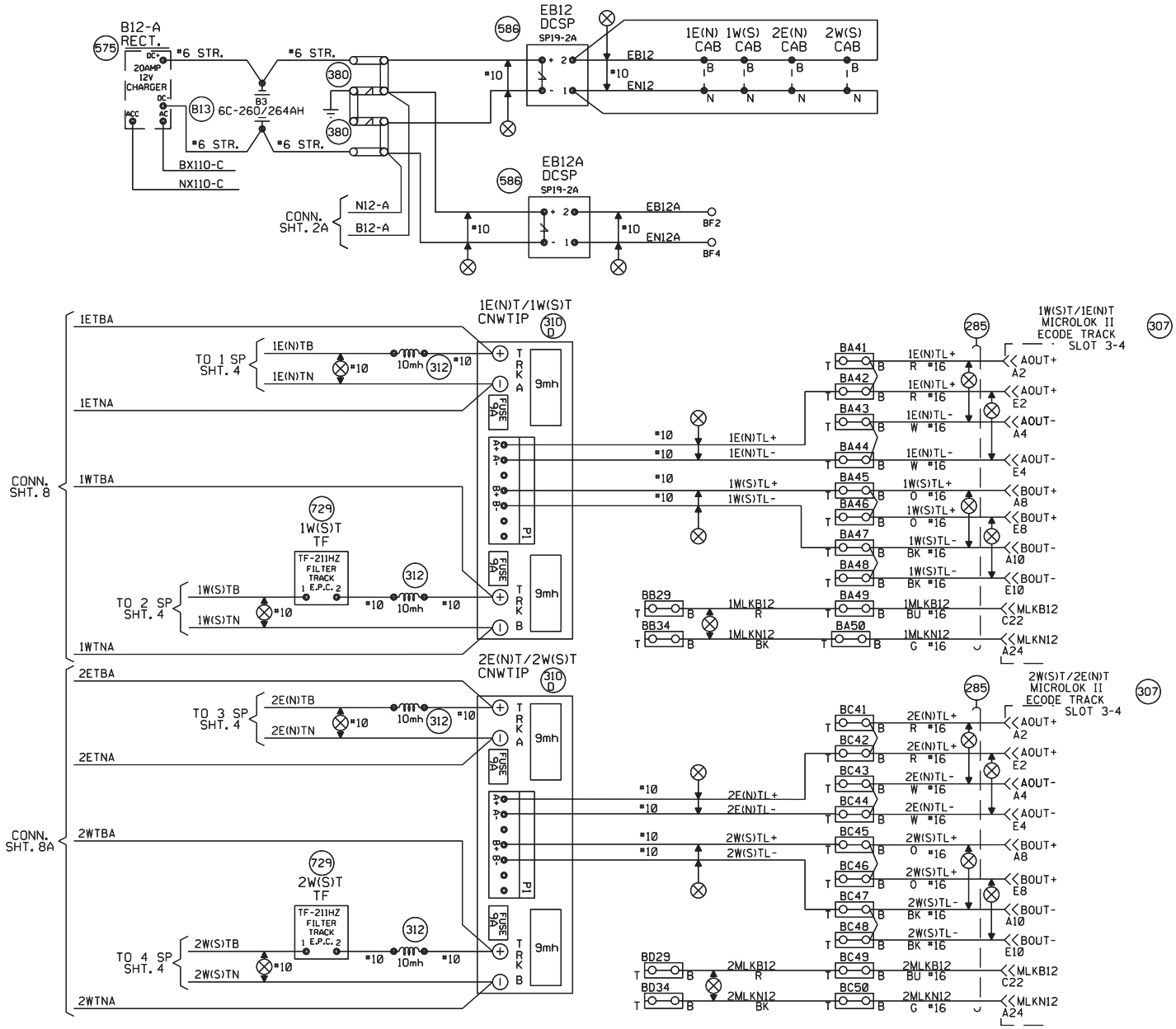

NEW SHEET

Designed: 01/06/15 INSTALL FLASHERS W/GATES & CWT M.P. 101.76 HARMON ROAD Rec#: WO#: 27689 IS: /NBT / /XRL/JTB	MODIFICATION LEVEL		CIRCUIT MODIFICATIONS ARE NOT TO BE MADE WITHOUT AUTHORITY FROM THE OFFICE OF SIGNAL DESIGN	Date: 01/06/15 Des: XRL Chk: NBT AFE: 27689	UNION PACIFIC RAILROAD DIXON, ILLINOIS HARMON ROAD GENEVA SUBDIVISION Office of AVP Engineering - Signal Omaha, Nebraska	Sh.: 7 DOT 175159D MP: 101.76 ID: GEN10176.7S	
	Q.A. LAST LEVEL CHECKED	DU					
	LAST LEVEL MOD THIS TYPICAL	DU					
	LAST LEVEL BY DESIGNER	DU					
	CHANGED FROM TYPICAL?	Y					
	REV 01/28/14 2TMLHBINTC.IEC						

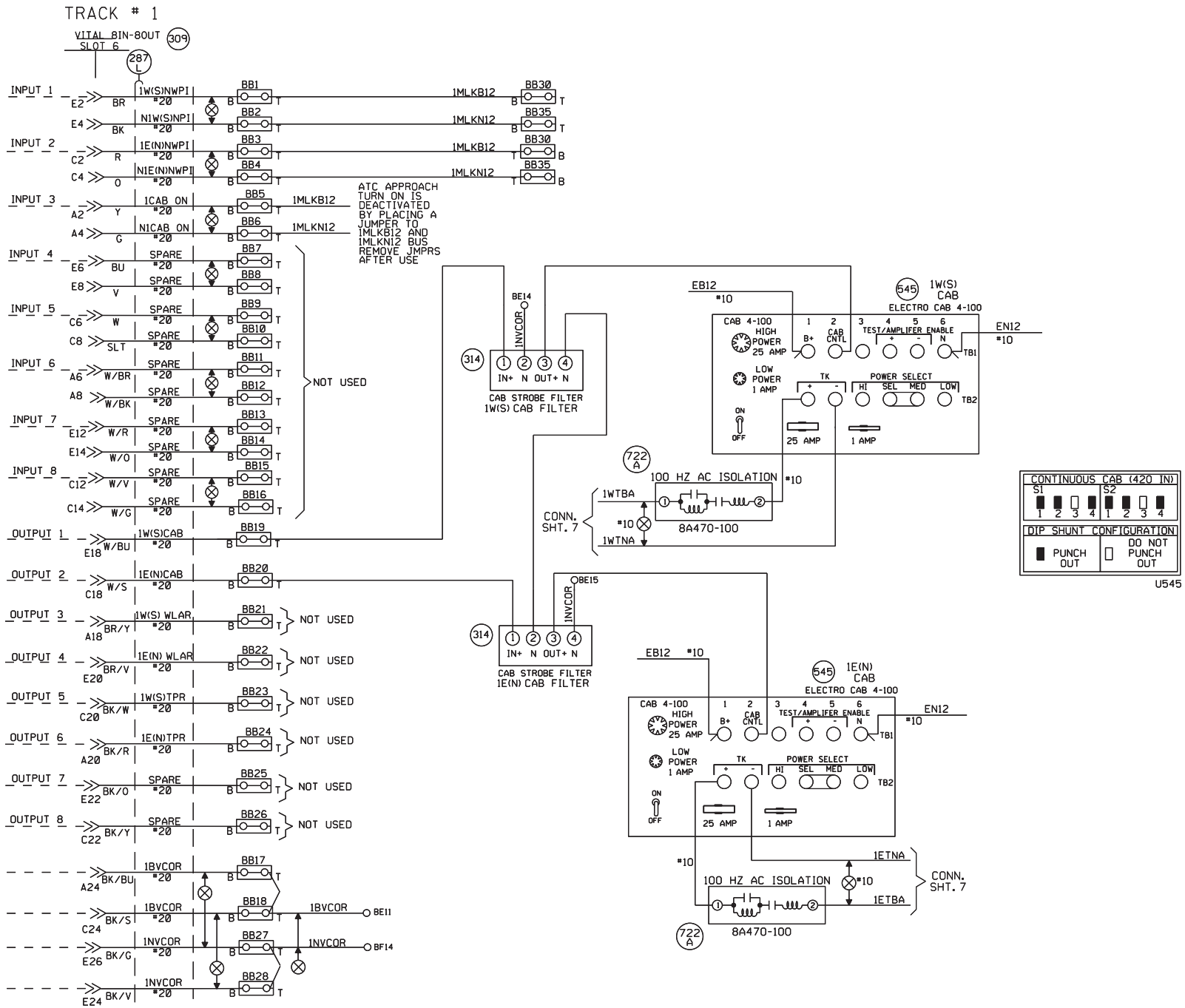

CONTINUOUS CAB (420 IN)	
S1	S2
1 2 3 4	1 2 3 4
DIP SHUNT CONFIGURATION	
■ PUNCH OUT	□ DO NOT PUNCH OUT

U545

NOTES:
DIPSHUNTS LOCATED ON WAVEFORM GENERATOR MODULE.

NEW SHEET

Designed: 01/06/15

INSTALL FLASHERS W/GATES & CWT M.P. 101.76 HARMON ROAD

Rec'd: WO#: 27689 /NBT
IS: / XRL/JTB

MODIFICATION LEVEL	
O. A. LAST LEVEL CHECKED	DU
LAST LEVEL MOD THIS TYPICAL	DU
LAST LEVEL BY DESIGNER	DU
CHANGED FROM TYPICAL?	Y
REV 01/28/14 2TMLMBINTC, 3BCN	

CIRCUIT MODIFICATIONS ARE NOT TO BE MADE WITHOUT AUTHORITY FROM THE OFFICE OF SIGNAL DESIGN

Date: 01/06/15
Des: XRL
Chk: NBT
AFE: 27689

UNION PACIFIC RAILROAD

DIXON, ILLINOIS
HARMON ROAD
GENEVA SUBDIVISION

Office of AVP Engineering - Signal Omaha, Nebraska

Sh.: 8
DOT 1751590
MP: 101.76
ID: GEN10176.8S

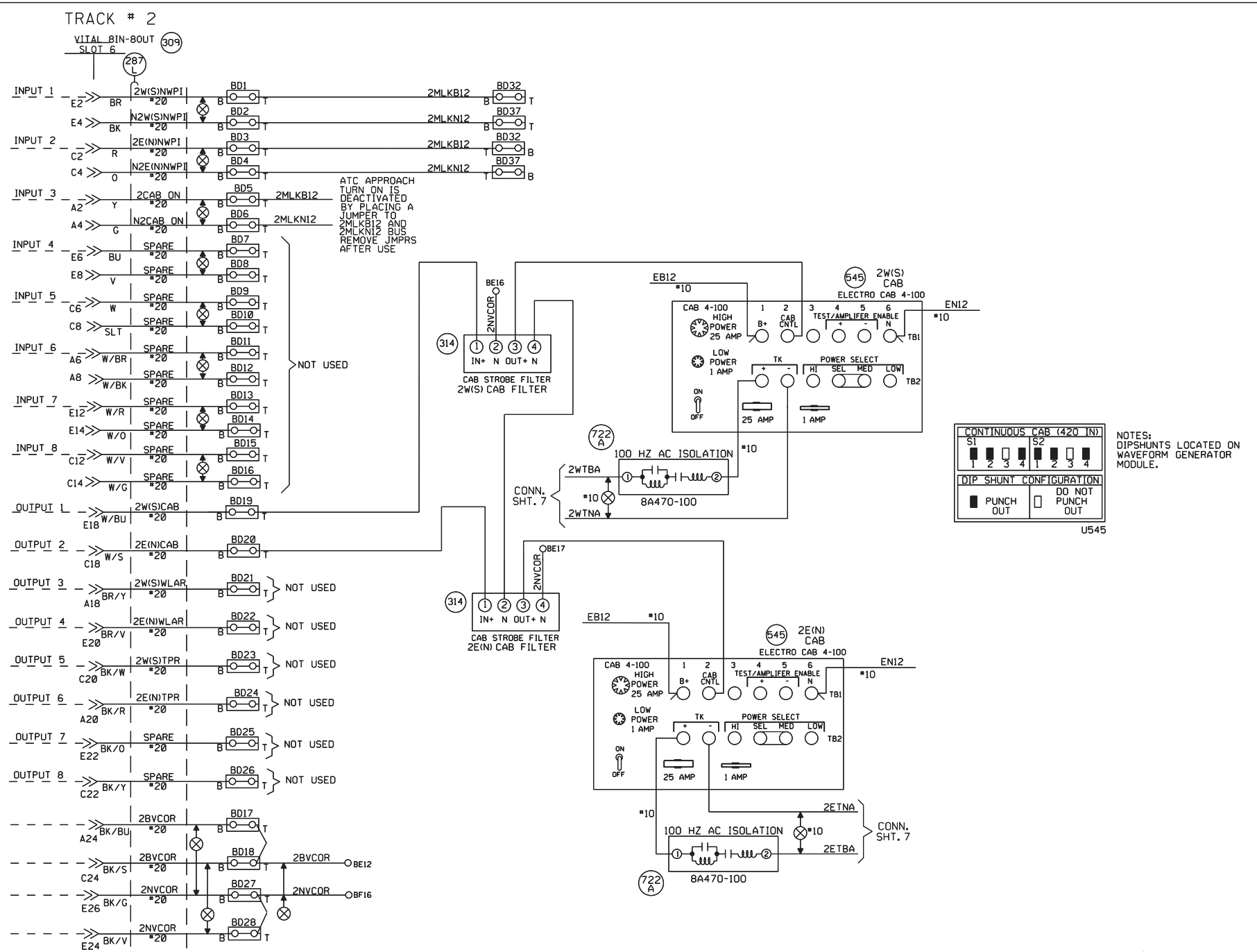

NEW SHEET

Designed: 01/06/15 INSTALL FLASHERS W/GATES & CWT M.P. 101.76 HARMON ROAD Rec*: WO*: 27689 IS: /NBT / /XRL/JTB	MODIFICATION LEVEL Q.A. LAST LEVEL CHECKED DU LAST LEVEL MOD THIS TYPICAL DU LAST LEVEL BY DESIGNER DU CHANGED FROM TYPICAL? Y REV 01/28/14 2TMLHBINTC.3CCN	CIRCUIT MODIFICATIONS ARE NOT TO BE MADE WITHOUT AUTHORITY FROM THE OFFICE OF SIGNAL DESIGN	Date: 01/06/15 Des: XRL Chk: NBT AFE: 27689	UNION PACIFIC RAILROAD DIXON, ILLINOIS HARMON ROAD GENEVA SUBDIVISION Office of AVP Engineering - Signal Omaha, Nebraska	Sh.: 8A DOT 175159D MP: 101.76 ID: GEN10176.8AS

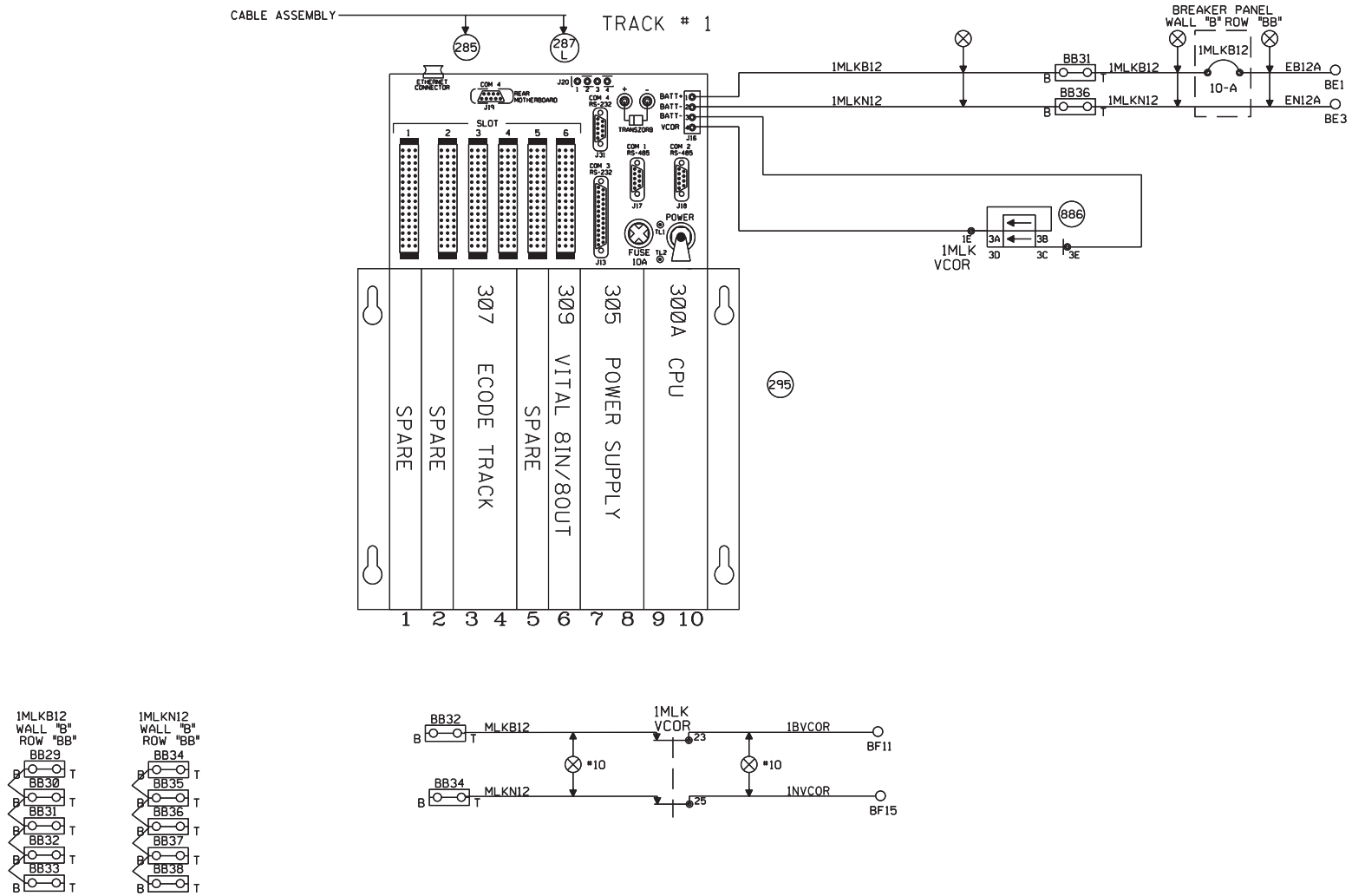

NEW SHEET

					Designed: 01/06/15 INSTALL FLASHERS W/GATES & CWT M.P. 101.76 HARMON ROAD Rec#: WO#: 27689 IS: /NBT / / XRL/JTB	MODIFICATION LEVEL Q.A. LAST LEVEL CHECKED DU LAST LEVEL MOD THIS TYPICAL DU LAST LEVEL BY DESIGNER DU CHANGED FROM TYPICAL? Y REV 01/28/14 2TMLHBINTC.4S	CIRCUIT MODIFICATIONS ARE NOT TO BE MADE WITHOUT AUTHORITY FROM THE OFFICE OF SIGNAL DESIGN	Date: 01/06/15 Des: XRL Chk: NBT AFE: 27689	UNION PACIFIC RAILROAD DIXON, ILLINOIS HARMON ROAD GENEVA SUBDIVISION Office of AVP Engineering - Signal Omaha, Nebraska	Sh.: 9 DOT 175159D MP: 101.76 ID: GEN10176.9S

TRACK # 1

ADDRESS SELECT JUMPERS LOCATED INSIDE CARDFILE

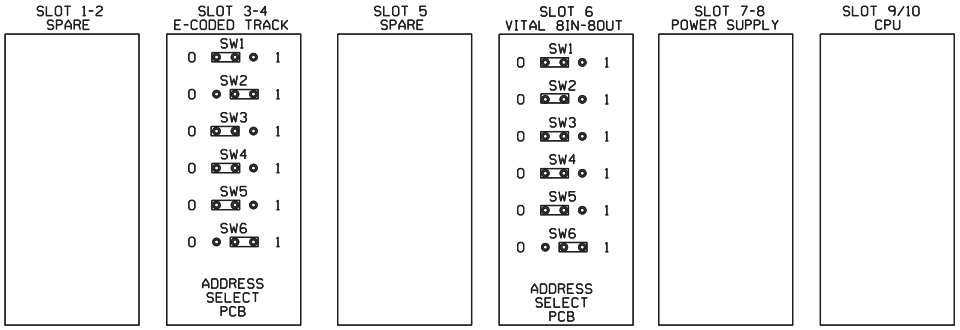

ML8CNWRR REV L

15 SEC SLOW PICK ET TO PREVENT JOINT HOP	
15 SEC SLOW PICK WT TO PREVENT JOINT HOP	
PROGRAM ID 1 (BINARY 1)	X
PROGRAM ID 2 (BINARY 2)	
PROGRAM ID 3 (BINARY 4)	X
PROGRAM ID 4 (BINARY 8)	
PROGRAM ID 5 (BINARY 16)	
PROGRAM ID 6 (BINARY 32)	X
PROGRAM ID 7 (BINARY 64)	
PROGRAM ID 8 (BINARY 128)	
CODE P?	

PLACE AN "X" IN THE BOX FOR DESIRED CONFIGURATION.

NOTE: FOR PTC COMPATIBLE CPU JUMPER SETTINGS REFER TO ANSALDO MANUAL 1D1.0028 PAGE 1-26 1-27 1-28 REV. 1 DATE 8/2009

FOR STANDARD CPU JUMPER SETTINGS REFER TO ANSALDO MANUAL SM-6800B PAGE 2-12, 2-13 REV.2.5 DATE 9/2000

NEW SHEET

Designed: 01/06/15

INSTALL FLASHERS W/GATES & CWT M.P. 101.76 HARMON ROAD

Rec*: WO*: 27689
IS: /NBT
/ XRL/JTB

MODIFICATION LEVEL	
Q.A. LAST LEVEL CHECKED	DU
LAST LEVEL MOD THIS TYPICAL	DU
LAST LEVEL BY DESIGNER	DU
CHANGED FROM TYPICAL?	Y

REV 01/28/14 2TMLHBINTC.4AS

CIRCUIT MODIFICATIONS ARE NOT TO BE MADE WITHOUT AUTHORITY FROM THE OFFICE OF SIGNAL DESIGN

Date: 01/06/15
Des: XRL
Chk: NBT
AFE: 27689

UNION PACIFIC RAILROAD
DIXON, ILLINOIS
HARMON ROAD
GENEVA SUBDIVISION
Office of AVP Engineering - Signal Omaha, Nebraska

Sh.: 10
DOT 1751590
MP: 101.76
ID: GENI0176.10S

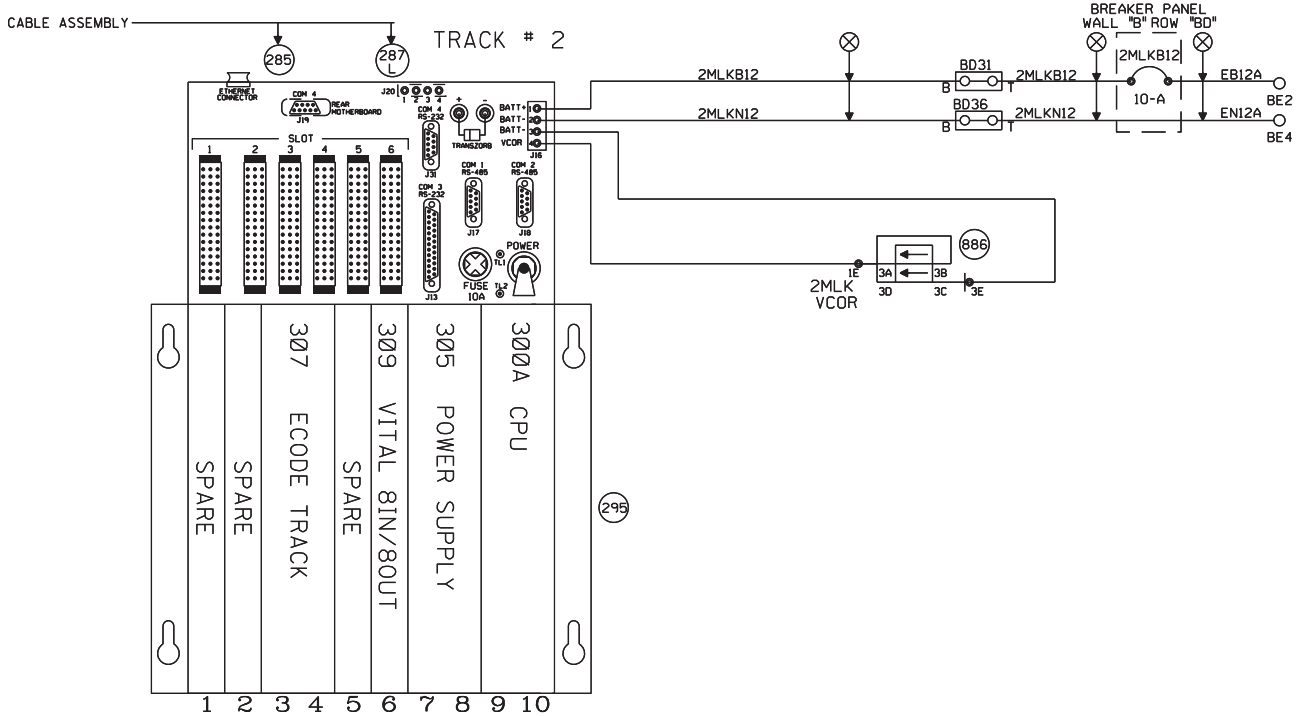

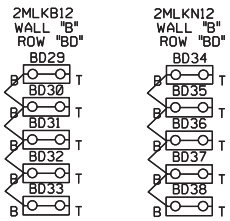

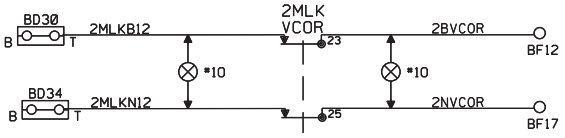

NEW SHEET

					Designed: 01/06/15 INSTALL FLASHERS W/GATES & CWT M.P. 101.76 HARMON ROAD Rec#: WO#: 27689 IS: /NBT / / XRL/JTB	MODIFICATION LEVEL Q.A. LAST LEVEL CHECKED DU LAST LEVEL MOD THIS TYPICAL DU LAST LEVEL BY DESIGNER DU CHANGED FROM TYPICAL? Y REV 01/28/14 2TMLHBINTC.5S	CIRCUIT MODIFICATIONS ARE NOT TO BE MADE WITHOUT AUTHORITY FROM THE OFFICE OF SIGNAL DESIGN	Date: 01/06/15 Des: XRL Chk: NBT AFE: 27689	UNION PACIFIC RAILROAD DIXON, ILLINOIS HARMON ROAD GENEVA SUBDIVISION Office of AVP Engineering - Signal Omaha, Nebraska	Sh.: 11 DOT 175159D MP: 101.76 ID: GEN10176.11S

TRACK # 2

ADDRESS SELECT JUMPERS LOCATED INSIDE CARDFILE

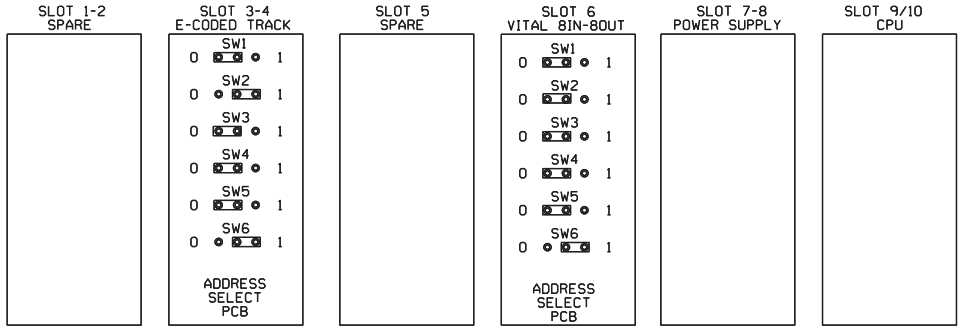

ML8CNWRR REV L

15 SEC SLOW PICK ET TO PREVENT JOINT HOP	
15 SEC SLOW PICK WT TO PREVENT JOINT HOP	
PROGRAM ID 1 (BINARY 1)	X
PROGRAM ID 2 (BINARY 2)	
PROGRAM ID 3 (BINARY 4)	X
PROGRAM ID 4 (BINARY 8)	
PROGRAM ID 5 (BINARY 16)	
PROGRAM ID 6 (BINARY 32)	X
PROGRAM ID 7 (BINARY 64)	
PROGRAM ID 8 (BINARY 128)	
CODE P?	

PLACE AN "X" IN THE BOX FOR DESIRED CONFIGURATION.

NOTE: FOR PTC COMPATIBLE CPU JUMPER SETTINGS REFER TO ANSALDO MANUAL 1D1.0028 PAGE 1-26 1-27 1-28 REV. 1 DATE 8/2009

FOR STANDARD CPU JUMPER SETTINGS REFER TO ANSALDO MANUAL SM-6800B PAGE 2-12, 2-13 REV.2.5 DATE 9/2000

NEW SHEET

Designed: 01/06/15

INSTALL FLASHERS W/GATES & CWT M.P. 101.76 HARMON ROAD

Rec'd: WO#: 27689
IS: /NBT
/ XRL/JTB

MODIFICATION LEVEL	
Q.A. LAST LEVEL CHECKED	DU
LAST LEVEL MOD THIS TYPICAL	DU
LAST LEVEL BY DESIGNER	DU
CHANGED FROM TYPICAL?	Y

REV 01/28/14 2TMLHBINTC.5AS

CIRCUIT MODIFICATIONS ARE NOT TO BE MADE WITHOUT AUTHORITY FROM THE OFFICE OF SIGNAL DESIGN

Date: 01/06/15
Des: XRL
Chk: NBT
AFE: 27689

UNION PACIFIC RAILROAD
DIXON, ILLINOIS
HARMON ROAD
GENEVA SUBDIVISION
Office of AVP Engineering - Signal Omaha, Nebraska

Sh.: 12
DOT 1751590
MP: 101.76
ID: GENI0176.12S

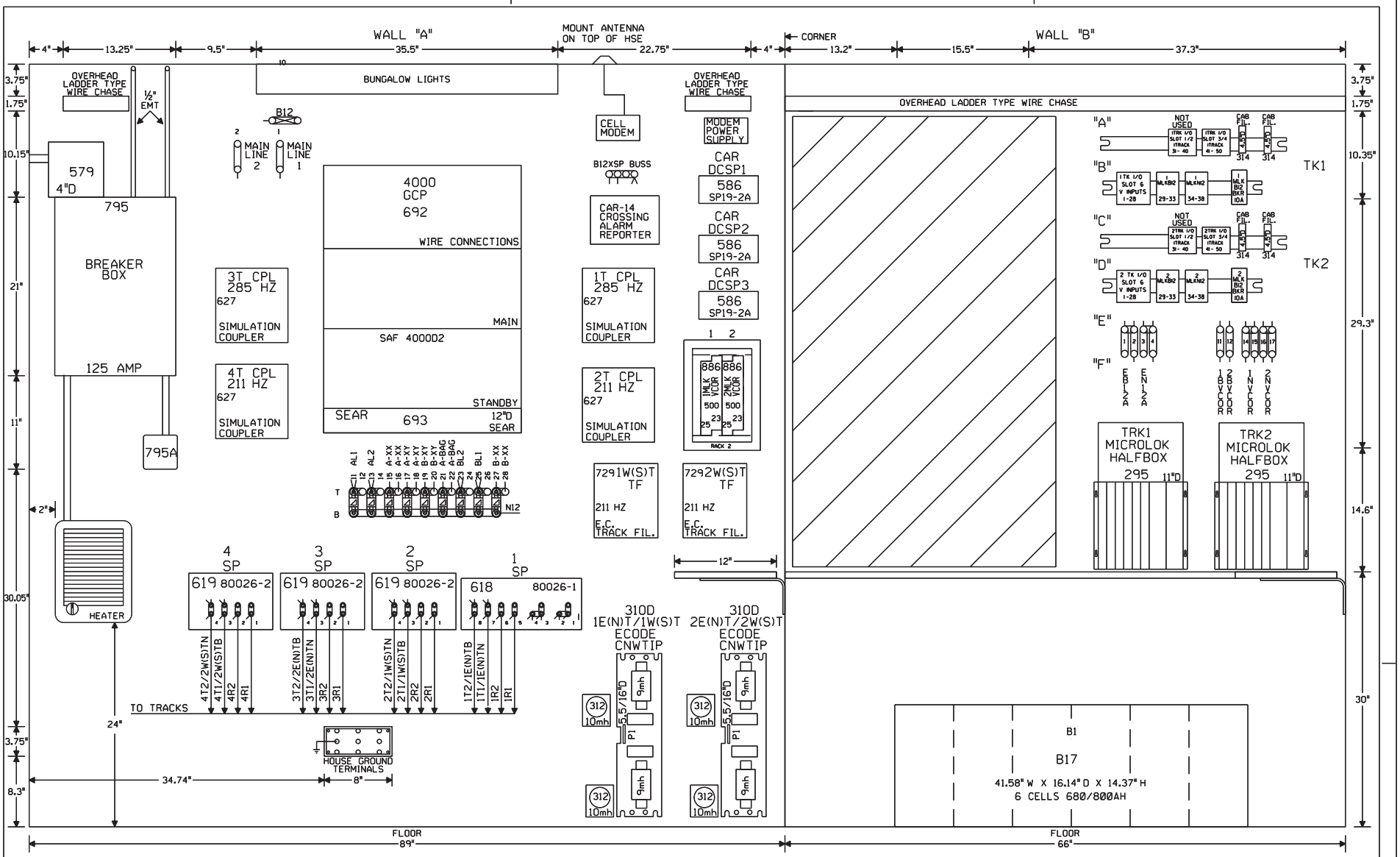

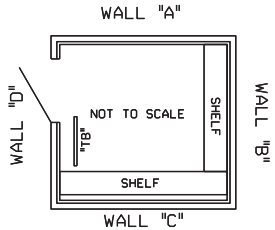

6X8 XING HOUSE WITH HEATER AND BLOWER U.P. PART#520-2531

NOTE: ALL DIMENSIONS SHOWN ARE APPROXIMATE.

NEW SHEET

Designed: 01/06/15 INSTALL FLASHERS W/GATES & CWT M.P. 101.76 HARMON ROAD Rec#: WO#: 27689 IS: /NBT /XRL/JTB	CIRCUIT MODIFICATIONS ARE NOT TO BE MADE WITHOUT AUTHORITY FROM THE OFFICE OF SIGNAL DESIGN	Date: 01/06/15 Des: XRL Chk: NBT AFE: 27689	UNION PACIFIC RAILROAD DIXON, ILLINOIS HARMON ROAD GENEVA SUBDIVISION Office of AVP Engineering - Signal Omaha, Nebraska	Sh.: 13 DOT 175159D MP: 101.76 ID: GEN10176.13X	

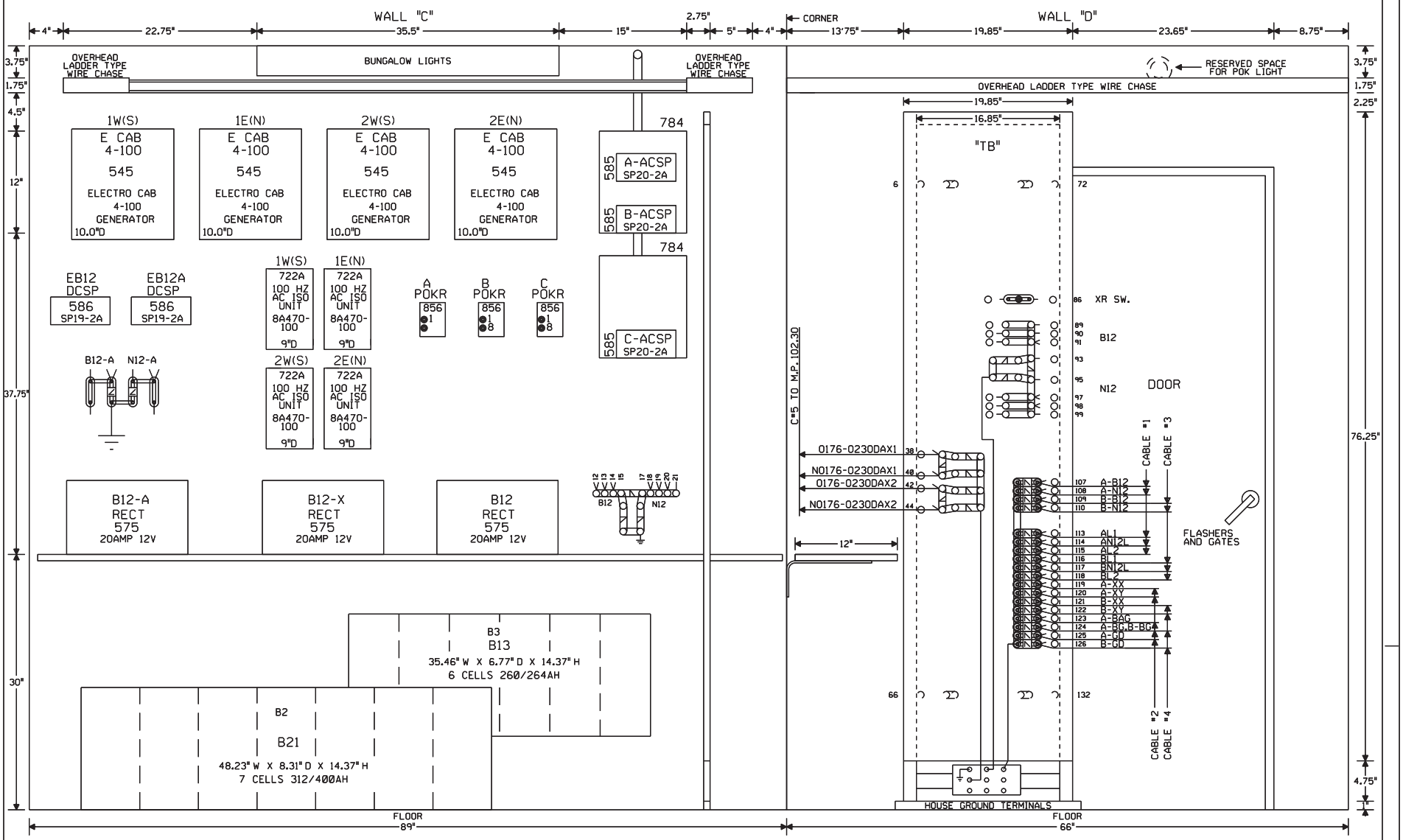

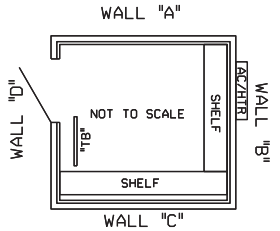

NOTE: ALL DIMENSIONS SHOWN ARE APPROXIMATE.

NEW SHEET

Designed: 01/06/15 INSTALL FLASHERS W/GATES & CWT M.P. 101.76 HARMON ROAD Rec'd: WO#: 27689 IS: /NBT / /XRL/JTB	CIRCUIT MODIFICATIONS ARE NOT TO BE MADE WITHOUT AUTHORITY FROM THE OFFICE OF SIGNAL DESIGN	Date: 01/06/15 Des: XRL Chk: NBT AFE: 27689	**UNION PACIFIC RAILROAD** DIXON, ILLINOIS HARMON ROAD GENEVA SUBDIVISION Office of AVP Engineering - Signal Omaha, Nebraska	Sh.: 14 DOT 1751590 MP: 101.76 ID: GEN10176.14X	