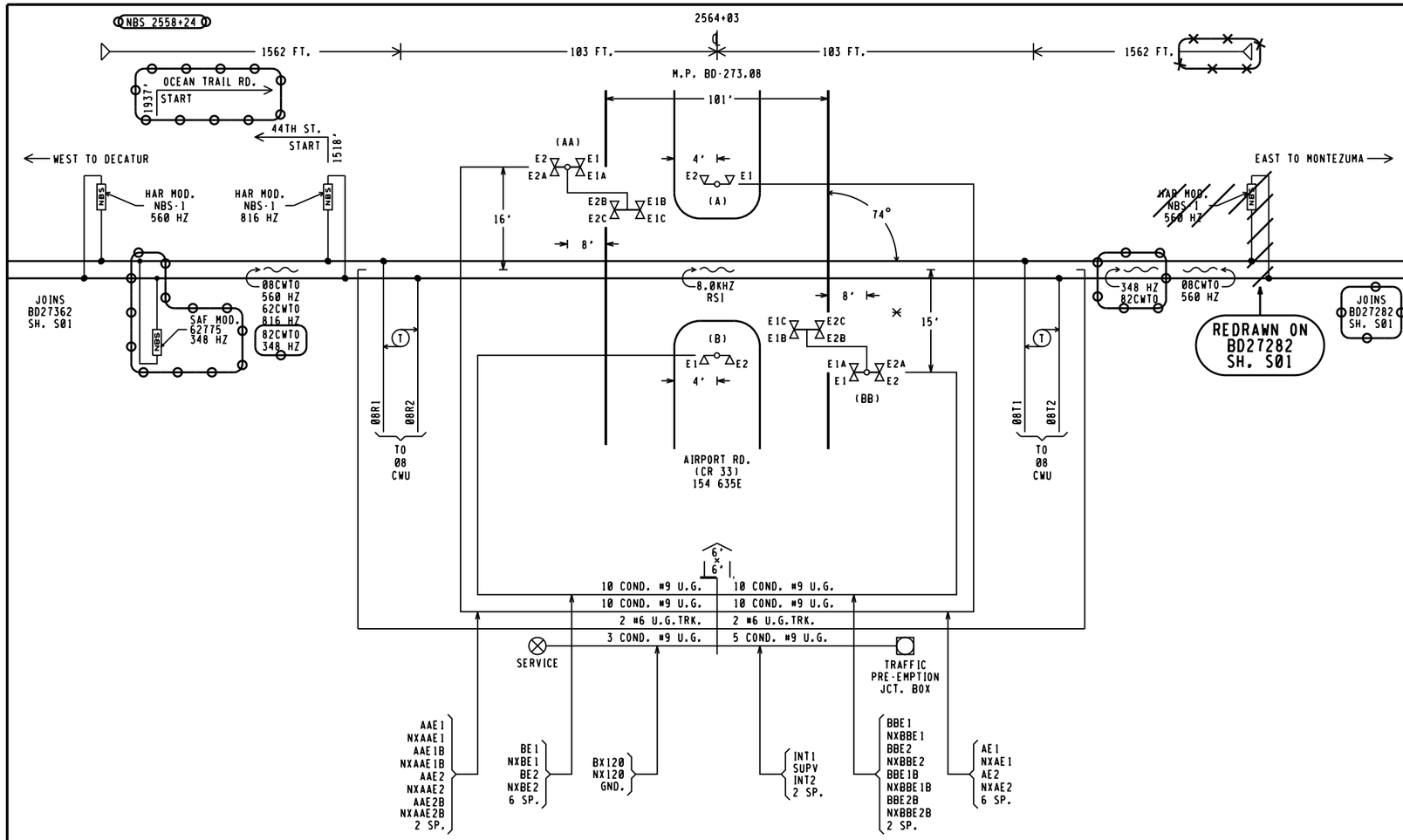

APPROACH LENGTHS TABLE DC, AFO, TYPE C, MOTION, CWT, OR OTHER	WESTWARD TRACK 1 MOT	EASTWARD TRACK 1 MOT
STANDARD MINIMUM WARNING TIME	20	20
ROADWAY GATE TIME	0	0
CLEARANCE TIME	1	1
DOT TRAFFIC LIGHT SIMULTANEOUS PREEMPT TIME ✳	7	7
DESIGNED WARNING TIME FOR TRAINS AT TIME TABLE SPEED	27	27
DOT TRAFFIC LIGHT ADVANCE PREEMPT TIME ✳	0	0
CONTROL EQUIPMENT DECISION TIME	3	3
DESIGNED DETECTION TIME FOR TRAINS AT TIME TABLE SPEED	30	30
TIME TABLE MAXIMUM TRAIN SPEED IN MILES PER HOUR	30	30
BUFFER SPEED IN MILES PER HOUR	5	5
TOTAL WARNING SYSTEM DESIGN SPEED	35	35
APPROACH DISTANCE TO ISLAND EDGE IN FEET	1562	1562
HALF WIDTH OF ISLAND IN FEET	$50 + \frac{105}{2}$	$50 + \frac{105}{2}$
APPROXIMATE MILE POSTS FOR APPROACH CIRCUIT	272.78	273.37

✳AUTHORIZING AGENCY, IL.CC
✳DATE OF REQUIREMENT, 09-19-01
✳AMOUNT OF TIME (SEC.), 7 SEC.

//// : SHOWN ELSEWHERE
: NOTE
: IN
: OUT

CXD1539741 IL2015023
07-30-15 XRL/S.BABU/
xorail

NOTE: 1. 20 WATT BULBS ON GATE ARMS.
ALL OTHERS TO BE 25 WATT BULBS.
2. CANT LENGTH (AA) 20' (BB) 20'
3. ✳ = LOCATION OF HOUSE
4. (N) = APPROXIMATE COMPASS NORTH.
5. THE TRANSMITTER LEADS FOR MOTION OR PREDICTOR EQUIPMENT SHOULD BE CONNECTED ON THE BUNGALOW OR SHORT LEAD SIDE OF THE CROSSING.
6. ISLAND TRACK LEADS SHOULD BE CONNECTED 50 FEET FROM ROAD EDGE BUT ON NARROW ROADS (20' OR LESS) ISLAND LENGTH SHALL BE 120 FEET.
7. WARNING SYSTEM APPROACH CIRCUIT DISTANCES ARE TO BE MEASURED FROM THE ISLAND TRACK CONNECTIONS.

REVISIONS

03-19-03 SWE	IL2001026
	IL2008018

CSX TRANSPORTATION
RAIL TRANSPORT GROUP ENGINEERING
COMMUNICATIONS AND SIGNALS

MONTEZUMA TO DECATUR
DECATUR, IL
TRACK PLAN
AIRPORT RD. (CR 33), 154 635E, MP. BD-273.08

DESIGNED	DIGITIZED	CHECKED	DATE
SWE/JLB	SWE/DRC	SWE/MJH	09-21-01

DRAWING	SHEET NO	NEXT SH	NEXT FILE	NEXT SH	FILE	SHEET
2175-6-Q	1-1	1-2	BD27308	E01	BD27308	S01

INDEX

CONTENTS

SH. NO.	CONTENTS	REVISION NO. 1	2	3	4	5	6	7	8	9
I01	INDEX AND REVISIONS	╱								
S01	TRACK AND SIGNAL PLAN	╱								
P01	MINIMUM PROGRAM STEPS REPORT CWE-82	╱								
E01	POWER DISTRIBUTION	╱								
C01	DETECTION DEVICE CONSIST CWE-82	╱								
C02	DETECTION CIRCUITRY CWE-82	╱								
C03	DETECTION CIRCUITRY CWE-82	╱								
C04	CROSSING WARNING DEVICE GATE CIRCUITRY	╱								
C05	CROSSING WARNING DEVICE LIGHT CIRCUITRY	╱								
C06	CROSSING WARNING DEVICE CIRCUITRY	╱								
C07	SEAR II1 CONFIGURATION & FUNCTIONS	╱								

╱ = PLANS SENT TO FIELD (DISTRIBUTED)

╳ = PLANS AS-IN-SERVICED (UP TO DATE)

REVISIONS

REV. NO.	PROJECT NO.	DESIGN DATE	IN SERVICE DATE	REVISION DATE
1	IL2015023	07-30-15		

TO BE COMPLETED ON A.I.S.

= NOTE

NEW WORK

CXD1539741 IL2015023

07-30-15 XRL/S.BABU/

xorail

CSX TRANSPORTATION

RAIL TRANSPORT GROUP ENGINEERING
COMMUNICATIONS AND SIGNALS

OCEAN TRAIL ROAD 154634X

INDEX AND REVISIONS

DECATUR, IL M.P. BD-272.82

4000GCP.101
REV. 03-31-06

DESIGNED	DIGITIZED	CHECKED	DATE
XRL	XRL	XRL	07-30-15

DESIGN DATE	REV. NO.	DRAWING	SHEET NO	FILE	SHEET
07-30-15	1	-----	-----	BD27282	I01

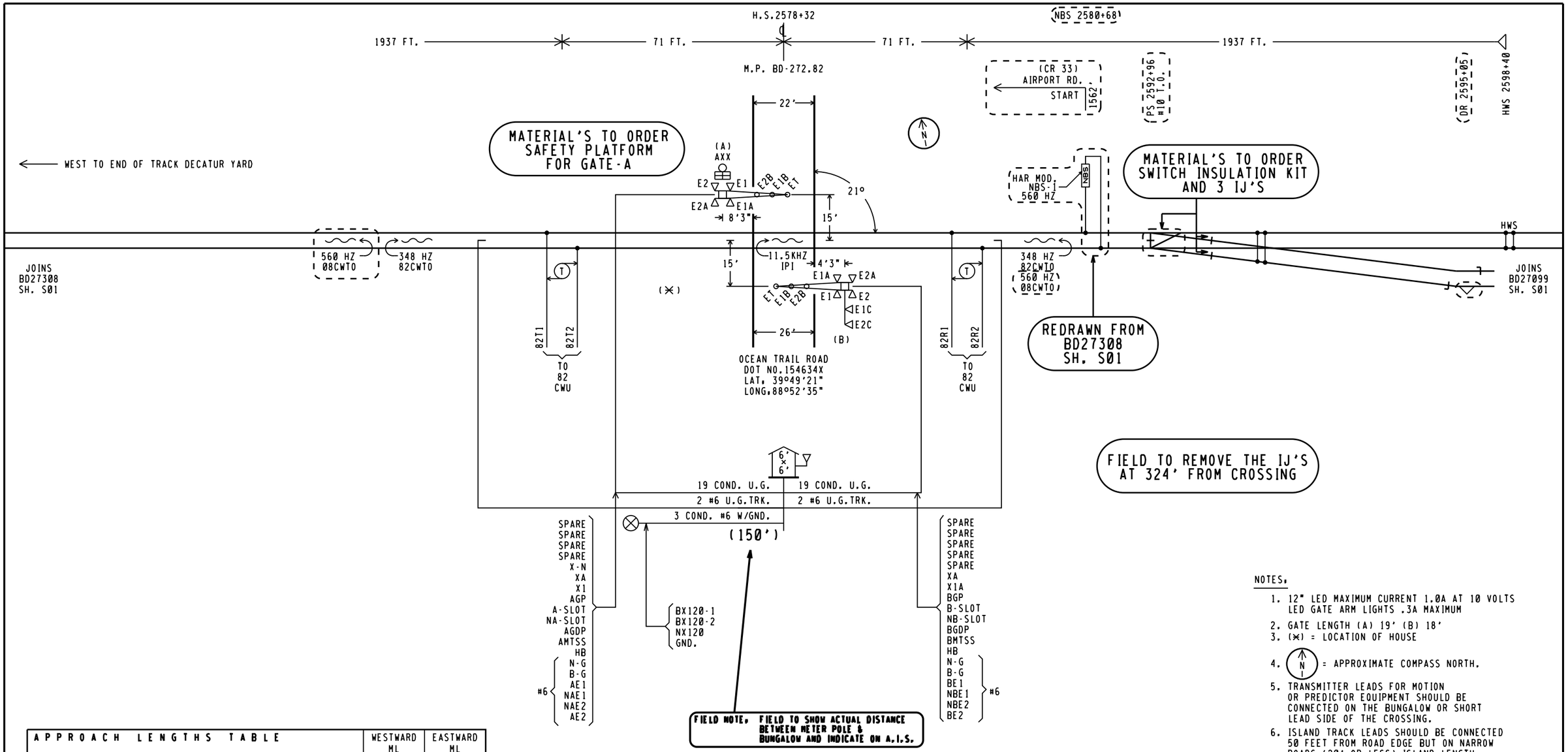

APPROACH LENGTHS TABLE DC, AFO, TYPE C, MOTION, CWT, OR OTHER	WESTWARD ML CWT	EASTWARD ML CWT
STANDARD MINIMUM WARNING TIME IN SECONDS	25	25
ROADWAY GATE TIME IN SECONDS	5	5
CLEARANCE TIME IN SECONDS	4	4
DOT TRAFFIC LIGHT SIMULTANEOUS PREEMPT TIME IN SECONDS ✳	0	0
DESIGNED WARNING TIME FOR TRAINS AT TIME TABLE SPEED	34 SEC.	34 SEC.
DOT TRAFFIC LIGHT ADVANCE PREEMPT TIME IN SECONDS ✳	0	0
CONTROL EQUIPMENT DECISION TIME IN SECONDS	5	5
DESIGNED DETECTION TIME FOR TRAINS AT TIME TABLE SPEED	39 SEC.	39 SEC.
TIME TABLE MAXIMUM TRAIN SPEED IN MILES PER HOUR	30	30
BUFFER SPEED IN MILES PER HOUR	5	5
TOTAL WARNING SYSTEM DESIGN SPEED IN MILES PER HOUR	35	35
APPROACH DISTANCE TO ISLAND EDGE IN FEET	1937	1937
HALF WIDTH OF ISLAND IN FEET	71	71
APPROXIMATE MILE POSTS FOR APPROACH CIRCUIT	273.21	272.44

✳AUTHORIZING AGENCY, NONE
✳DATE OF REQUIREMENT, NONE
✳AMOUNT OF TIME (SEC.), NONE

NOTES,

1. 12" LED MAXIMUM CURRENT 1.0A AT 10 VOLTS LED GATE ARM LIGHTS .3A MAXIMUM
2. GATE LENGTH (A) 19' (B) 18'
3. (✳) = LOCATION OF HOUSE
4. (N) = APPROXIMATE COMPASS NORTH.
5. TRANSMITTER LEADS FOR MOTION OR PREDICTOR EQUIPMENT SHOULD BE CONNECTED ON THE BUNGALOW OR SHORT LEAD SIDE OF THE CROSSING.
6. ISLAND TRACK LEADS SHOULD BE CONNECTED 50 FEET FROM ROAD EDGE BUT ON NARROW ROADS (20' OR LESS) ISLAND LENGTH SHALL BE 120 FEET.
7. WARNING SYSTEM APPROACH CIRCUIT DISTANCES ARE TO BE MEASURED FROM THE ISLAND TRACK CONNECTIONS.

= EXISTING
= NOTE

NEW WORK
CXD1539741 IL2015023
07-30-15 XRL/S.BABU/
xorail

4000GCP.S01
REV. 11-30-08

CSX TRANSPORTATION
RAIL TRANSPORT GROUP ENGINEERING
COMMUNICATIONS AND SIGNALS

OCEAN TRAIL ROAD 154634X

TRACK AND SIGNAL PLAN
DECATUR, IL M.P. BD-272.82

DESIGNED	DIGITIZED	CHECKED	DATE
XRL	XRL	XRL	07-30-15

DESIGN DATE	REV. NO.	DRAWING	SHEET NO	FILE	SHEET
07-30-15	1	-----	-----	BD27282	S01

Minimum Program Steps Report

Location and SIN

DOT Number: 154634X
Milepost Number: BD-272.82
Site Name: OCEAN TRAIL ROAD

SIN: 712547200816 *

* Parameter is part of office check number calculation.

MCF and Template Selection

MCF Name: GCP-T6X-02-6.mcf
MCF Revision: 26
MCFCRC: 494D2656

Template = 1A.6 Trk Bi (OCCN) *

* Parameter is part of office check number calculation.

Minimum Program Steps

TEMPLATE: module configuration
Chassis Type = Dual Two Track (OCCN) *

TEMPLATE: track 1-Bi, Island
Track 1 , GCP Frequency = 348 Hz (OCCN) *
Track 1 , Approach Distance = 1937 ft (OCCN) *
Track 1 , Prime Warning Time = 34 sec (OCCN) *
Track 1 , GCP Transmit Level = Medium (Set in Field,TCN)
Track 1 , Isl Frequency = 11.5 kHz (OCCN) *

TEMPLATE: SSCC
SSCC-1 Number of GDs = 1 (OCCN) *
SSCC-2 Number of GPs = 1 (OCCN) *
SSCC-2 Number of GDs = 1 (OCCN) *

TEMPLATE: OOS
OOS Control = Display+OOS IPs (OCCN) *
OOS Timeout = 1 hrs (Set in Field)

TEMPLATE: IP assignment SSCC
IN 7.2 = Not Used (OCCN) *
IN 8.2 = Out Of Service IP 1 (OCCN) *
IN 8.4 = GD 2.1 (OCCN) *
IN 8.5 = GP 2.1 (OCCN) *

GCP: track 1
Track 1 , Island Distance = 142 ft (Set in Field,TCN)

ADVANCED: site options
Daylight Savings = On (Set in Field)

SSCC: 1
SSCC-1 Gate Delay = 5 sec (OCCN) *
SSCC 1 , Flash Rate = 55 (OCCN) *

SSCC: 2
SSCC-2 Gate Delay = 5 sec (OCCN) *
SSCC 2 , Flash Rate = 55 (OCCN) *

SEAR
DI 1 = Gnd Flt Tester 1 (OCCN) *
DI 2 = Gnd Flt Tester 2 (OCCN) *
Rly 1 = Ground Fault Test (OCCN) *
Rly 2 = AC Control (OCCN) *

SEAR: slot 7-8 inputs
IN 7.1 = TSS 1 (OCCN) *
IN 8.1 = TSS 2 (OCCN) *
IN 8.3 = POK 2 (OCCN) *

* Parameter is part of office check number calculation.

Check Numbers

Office Check Number: 05748C55
Config. Check Number: 7DC1DC05
(Based on MCF Revision 26)

Parameters not part of office check number calculation:

Track 1 , GCP Transmit Level = Medium (Set in Field)
OOS Timeout = 1 hrs (Set in Field)
Track 1 , Island Distance = 142 ft (Set in Field)
Daylight Savings = On (Set in Field)

Comments

<none>

NEW WORK
CXD1539741 IL2015023
07-30-15 XRL/S.BABU/
xorail

CSX TRANSPORTATION
RAIL TRANSPORT GROUP ENGINEERING
COMMUNICATIONS AND SIGNALS

OCEAN TRAIL ROAD 154634X

MINIMUM PROGRAM STEPS REPORT CWE-82
DECATUR, IL M.P. BD-272.82

4000GCP.P01
REV. 06-30-09

DESIGNED	DIGITIZED	CHECKED	DATE
XRL	XRL	XRL	07-30-15

DESIGN DATE	REV. NO.	DRAWING	SHEET NO	FILE	SHEET
07-30-15	1	-----	-----	BD27282	P01

TOP ROW

ACR		
12	B	B77
15	B	
22	B	C30
25	B	
32	B	
35	B	

MCR				
9	F	11		N41
10		12		C48
				C49

B-G POKR				
9	F	11	F	N41
10		12		C48

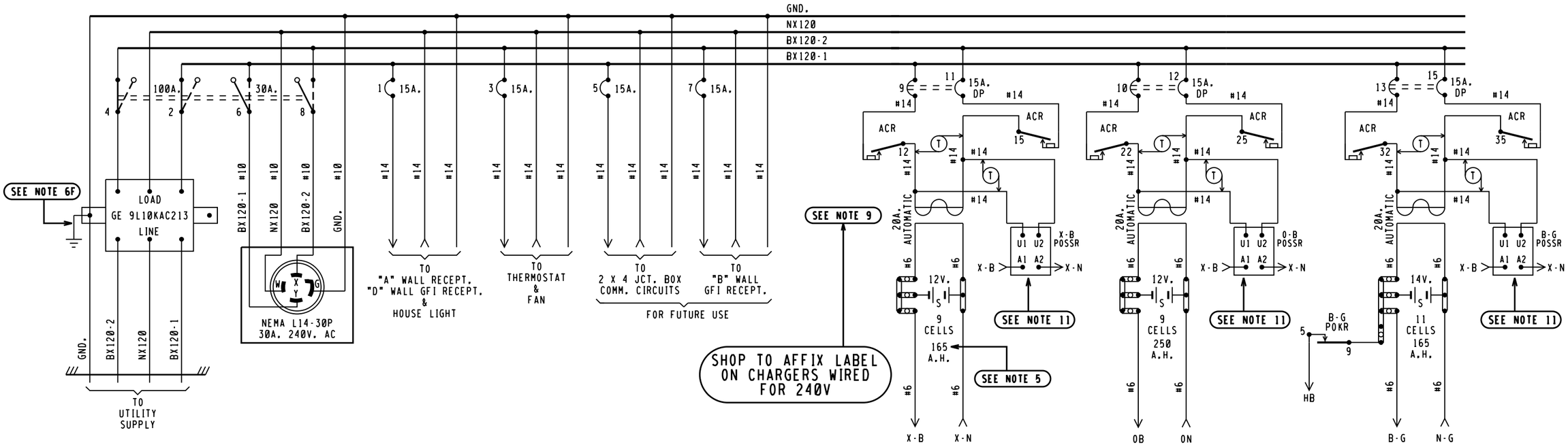

BX120-1	BX120-2
11.0 AMPS	11.0 AMPS

MAXIMUM LOAD
CALCULATED PER SS360

X-B POSSR					OB POSSR					B-G POSSR				
11	F	21	F	N70	11	F	21	F	N70	11	F	21	F	N70

WALL/DIN RAIL MOUNTED

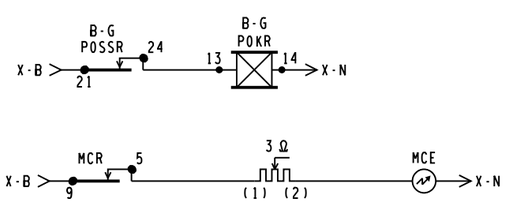

NOTES,

1 - REFERENCES ARE PER SCMS-13.
2 - ARRESTERS ARE PER SS382.
3 - SHELF RELAY PLACEMENT ON CONSIST CHART HAS NO SIGNIFICANCE.
4 - PLUG-IN RELAYS ARE VIEWED FROM THE FRONT OF RACK.
5 - BATTERY A.H. CAPACITY SHOWN IS THE MINIMUM REQUIREMENT.
6 - WIRING
  A - FEED TO ALL BUSSES, LIGHT CIRCUITS,MOTOR CIRCUITS TO BE #10 FLEX.
  B - 120-VOLT FEED FROM ENTRANCE TO POWER BUSS TO BE #10 FLEX.
  C - ALL TRACK WIRES TO BE #10 FLEX.
  D - ALL OTHERS TO BE #16 FLEX UNLESS NOTED.
  E - ALL BATTERY OUTPUTS TO BE #6 PER SS360.
  F - GROUND WIRE NOT NECESSARY WHEN GE ARRESTER IS MOUNTED ON GROUND PLANE OR METAL ENCLOSURE AFFIXED DIRECTLY TO BUNGALOW METALLIC STRUCTURAL MEMBER.
7 - CIRCUIT INTERRUPTERS 2 & 4 ARE MECHANICALLY INTERLOCKED WITH CIRCUIT INTERRUPTERS 6 & 8.
8 - LABEL ALL PRIMARY POWER WIRES WITH RED TAGS.
9 - CHARGERS WIRED FOR 240VAC
10 - CIRCUIT BREAKERS PANEL- 00124L125G (24 SPACES)
11 - SOLID STATE VOLTAGE MONITOR BENDER MOD. VME 420-D-1 DIN RAIL MOUNTED. OUTPUTS CONFIGURED NORMALLY CLOSED(NC). UNDERVOLATGE SENSING MINIMUM OF 216 VOLTS AC.

= NOTE

NEW WORK
CXD1539741 IL2015023
07-30-15 XRL/S.BABU/
xorail

6'X 6' PTC CROSSING HOUSE

CSX TRANSPORTATION
RAIL TRANSPORT GROUP ENGINEERING
COMMUNICATIONS AND SIGNALS

OCEAN TRAIL ROAD 154634X

POWER DISTRIBUTION
DECATUR, IL M.P. BD-272.82

4000GCP.E01
REV. 11-30-08

DESIGNED	DIGITIZED	CHECKED	DATE
XRL	XRL	XRL	07-30-15

DESIGN DATE	REV. NO.	DRAWING	SHEET NO	FILE	SHEET
07-30-15	1	-----	-----	BD27282	E01

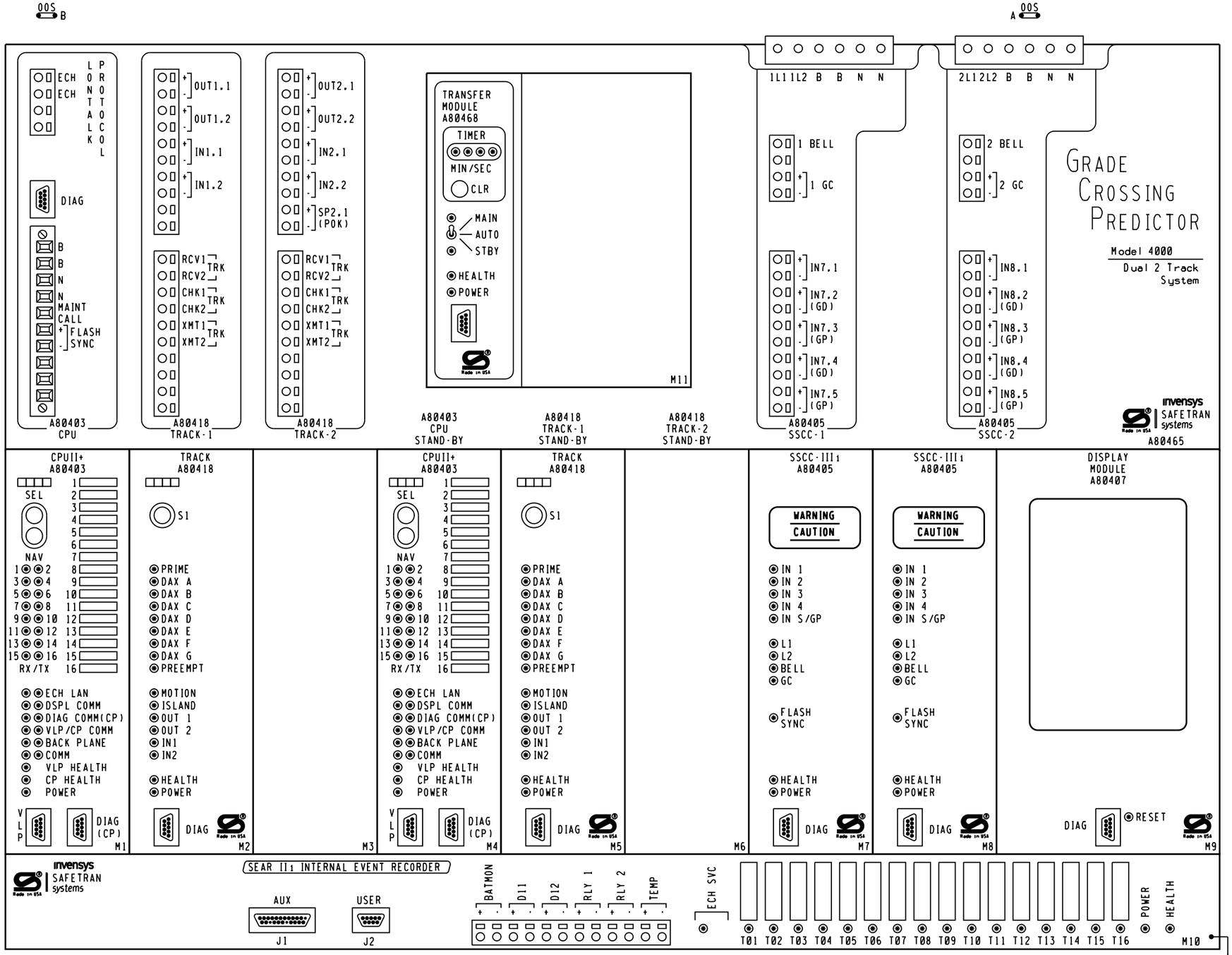

DIMENSIONS 23.25"W X 22.15"H X 12.38"D

GCP 4000 APPLICATION NOTES.

1. THE GRADE CROSSING PREDICTOR (GCP) IS A MODULAR MICROPROCESSOR CONTROLLED SYSTEM THAT IS DEPLOYED TO CONTINUALLY MONITOR THE APPROACHES TO RAILROAD GRADE CROSSINGS AND TO CONTROL THE LAMPS, GATES AND BELLS ASSOCIATED WITH THOSE CROSSINGS. WHEN EQUIPPED WITH THE SEAR II1 MODULE THE GCP 4000 WILL RECORD EVENTS AND REPORT ALARMS WHEN CONNECTED TO AN OFFICE SYSTEM.

2. THE GCP 4000 GCP (A80465) IS A TWO TRACK REDUNDANT UNIT CAPABLE OF DRIVING 4 INDEPENDENT FLASHER AND GATE SIGNALS AND RECORDING EVENTS AND REPORTING ALARMS. THIS A80465 INCLUDES THE FOLLOWING MODULES.

SLOT	MODULE	FUNCTION	PART NO.
M1	CPU-II+	MAIN	A80403
M2	TRACK-1	MAIN	A80418
M3	PANEL	NONE	D39325
M4	CPU-II+	STANDBY	A80403
M5	TRACK-1	STANDBY	A80418
M6	PANEL	NONE	D39325
M7	SSCC-III1	A SIGNAL	A80405
M8	SSCC-III1	B SIGNAL	A80405
M9	DISPLAY MODULE		A80407
TOP CENTER	TRANSFER UNIT		A80468
LOWER BAY	SEAR II1	RECORDER	A80410

3. EACH TRACK MODULE HAS TWO PROGRAMMABLE INPUTS AND TWO PROGRAMMABLE OUTPUTS.

4. THE SEAR II1 INTERNAL EVENT RECORDER HAS INPUTS FOR ONE BATTERY MONITOR, TWO NON-VITAL INPUTS AND TWO PROGRAMMABLE RELAY DRIVES (HEEL/FRONT).

5. LOCATED ON THE FRONT OF EACH MODULE THERE ARE LED LIGHTS TO INDICATE THE ACTIVITY OF CERTAIN FUNCTIONS OCCURRING INSIDE THE GCP.

6. BETWEEN SLOT 1 & 2 THERE IS A CHASSIS INDENTIFICATION CHIP (CIC) SOCKET AND AN ECD CONNECTOR (DB-25 FEMALE).

7. UPON THE FAILURE OF A MODULE IN SLOTS M1-M3 THE AUTOMATIC TRANSFER UNIT SWITCHES TO THE STANDBY MODULES IN SLOTS M4-M6.

8. THE GCP 4000 GCP (A80465) MAY USE RIO MODULES IN SLOTS M3 AND M6.

NEW WORK
CXD1539741 IL2015023
07-30-15 XRL/S.BABU/
xorail

CSX TRANSPORTATION
RAIL TRANSPORT GROUP ENGINEERING
COMMUNICATIONS AND SIGNALS

OCEAN TRAIL ROAD 154634X

DETECTION DEVICE CONSIST CWE-82
DECATUR, IL M.P. BD-272.82

4000GCP.C01
REV. 11-30-08

DESIGNED	DIGITIZED	CHECKED	DATE
XRL	XRL	XRL	07-30-15

DESIGN DATE	REV. NO.	DRAWING	SHEET NO	FILE	SHEET
07-30-15	1	-----	-----	BD27282	C01

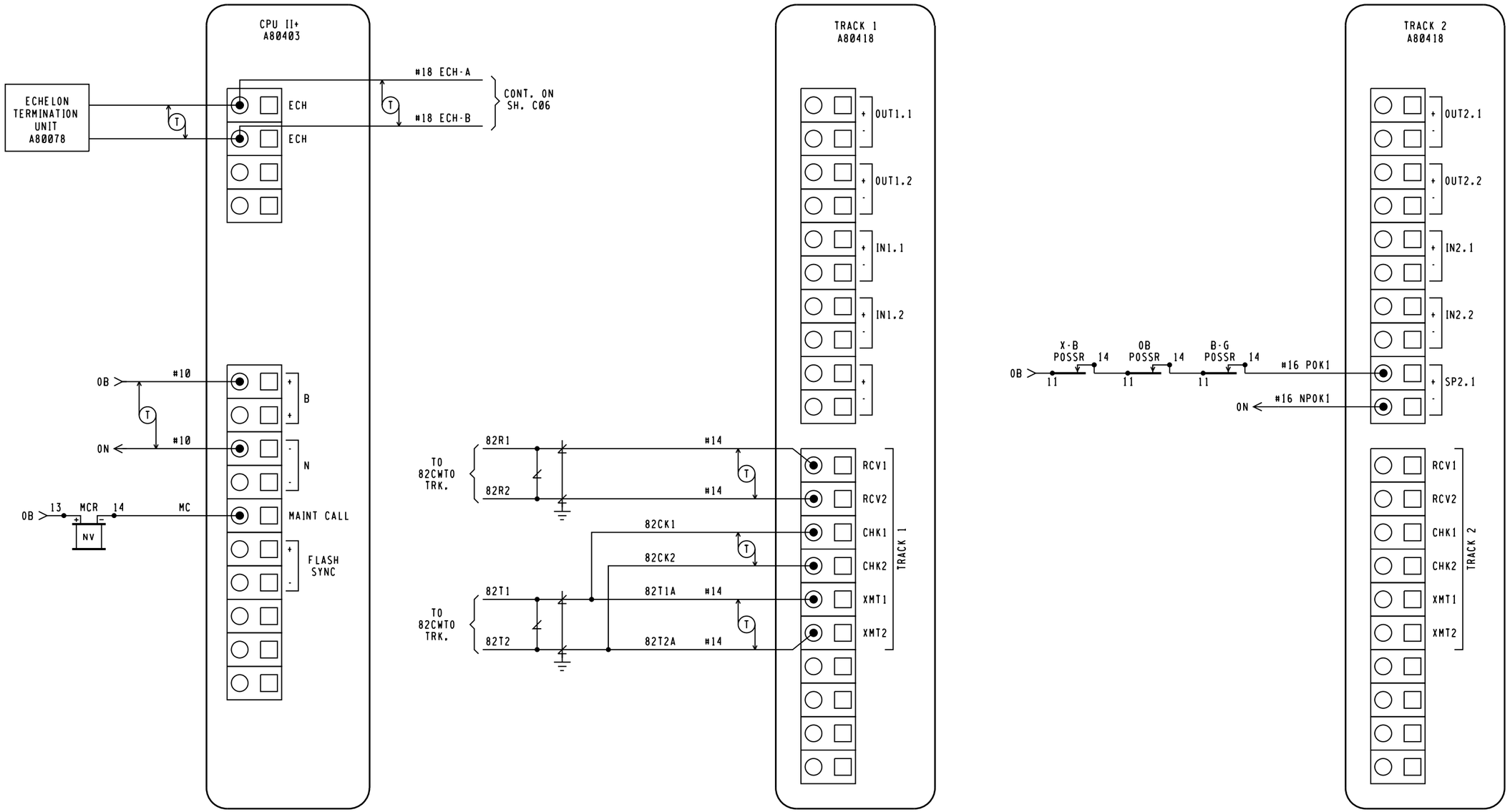

NOTE:

ECHELON CONNECTIONS NOT TO EXCEED 53' IN LENGTH AND TOTAL LENGTH COMBINED NOT TO EXCEED 430' WITH A MAXIMUM OF 8 NODES. RECOMMEND USE BELDEN WIRE CABLE #8461 OR EQUIVALENT.

NEW WORK
CXD1539741 IL2015023
07-30-15 XRL/S.BABU/
xorail

CSX TRANSPORTATION
RAIL TRANSPORT GROUP ENGINEERING
COMMUNICATIONS AND SIGNALS

OCEAN TRAIL ROAD 154634X

DETECTION CIRCUITRY CWE-82
DECATUR, IL M.P. BD-272.82

4000GCP.C02
REV. 11-30-08

DESIGNED	DIGITIZED	CHECKED	DATE
XRL	XRL	XRL	07-30-15

DESIGN DATE	REV. NO.	DRAWING	SHEET NO	FILE	SHEET
07-30-15	1	-----	-----	BD27282	C02

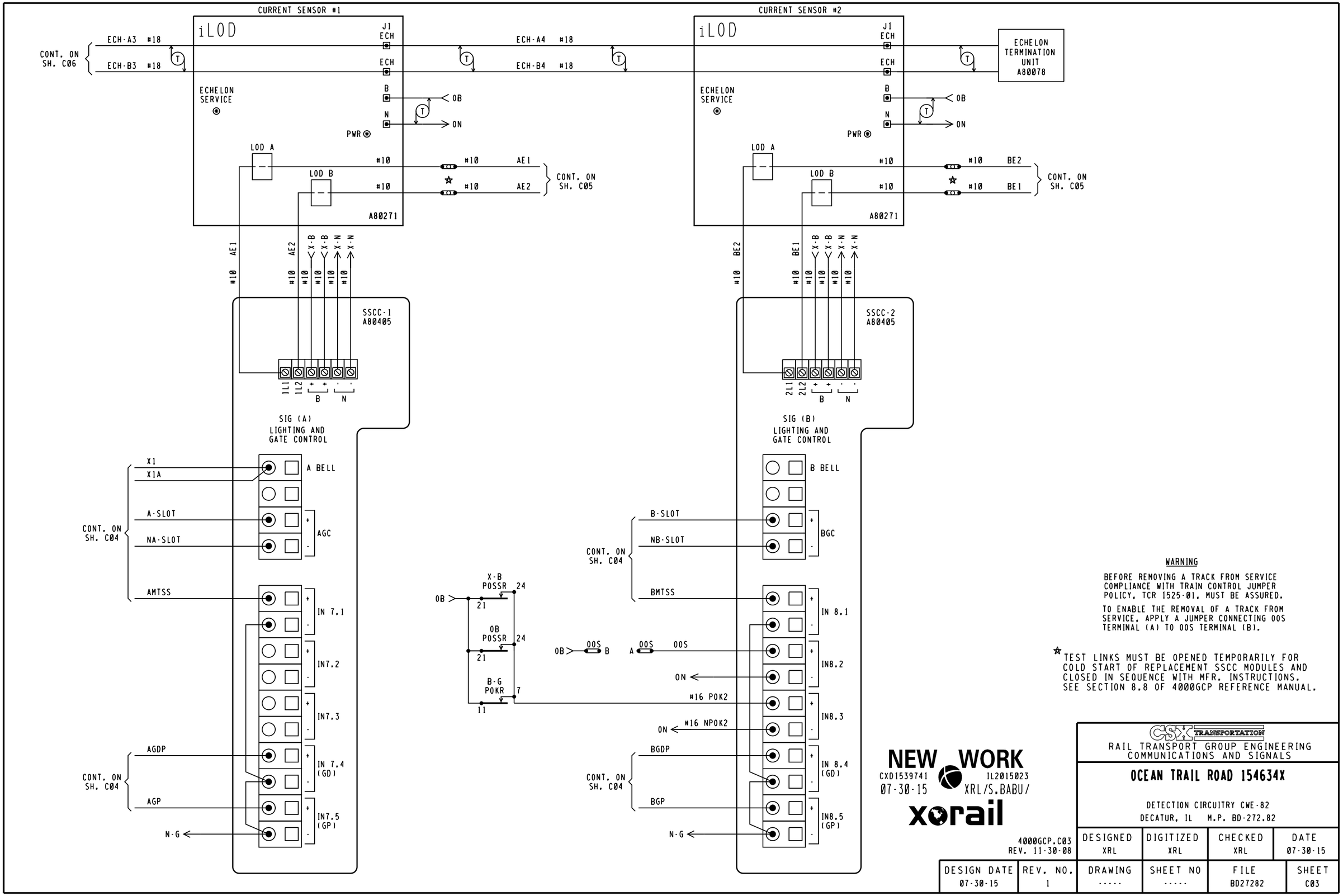
CURRENT SENSOR #1
iLOD
J1
ECH
ECH-A3 #18
ECH-B3 #18
CONT. ON
SH. C06
ECH-A4 #18
ECH-B4 #18
ECHELON
SERVICE
B
N
OB
ON
PWR
LOD A
LOD B
#10
AE1
AE2
CONT. ON
SH. C05
A80271
X-B
X-N
SSCC-1
A80405
1L1
1L2
B
N
SIG (A)
LIGHTING AND
GATE CONTROL
X1
X1A
A BELL
A-SLOT
NA-SLOT
AGC
AMTSS
IN 7.1
IN7.2
IN7.3
AGDP
IN 7.4
(GD)
AGP
IN7.5
(GP)
N-G
CURRENT SENSOR #2
ECHELON
TERMINATION
UNIT
A80078
BE2
BE1
SSCC-2
A80405
2L1
2L2
SIG (B)
LIGHTING AND
GATE CONTROL
B BELL
B-SLOT
NB-SLOT
BGC
BMTSS
IN 8.1
IN8.2
IN8.3
BGDP
IN 8.4
(GD)
BGP
IN8.5
(GP)
X-B
POSSR
24
21
OB
POSSR
B-G
POKR
7
11
00S
A
#16 POK2
#16 NPOK2
WARNING
BEFORE REMOVING A TRACK FROM SERVICE
COMPLIANCE WITH TRAIN CONTROL JUMPER
POLICY, TCR 1525-01, MUST BE ASSURED.
TO ENABLE THE REMOVAL OF A TRACK FROM
SERVICE, APPLY A JUMPER CONNECTING 00S
TERMINAL (A) TO 00S TERMINAL (B).
☆ TEST LINKS MUST BE OPENED TEMPORARILY FOR
COLD START OF REPLACEMENT SSCC MODULES AND
CLOSED IN SEQUENCE WITH MFR. INSTRUCTIONS.
SEE SECTION 8.8 OF 4000GCP REFERENCE MANUAL.
NEW WORK
CXD1539741
07-30-15
IL2015023
XRL/S.BABU/
xorail
CSX TRANSPORTATION
RAIL TRANSPORT GROUP ENGINEERING
COMMUNICATIONS AND SIGNALS
OCEAN TRAIL ROAD 154634X
DETECTION CIRCUITRY CWE-82
DECATUR, IL M.P. BD-272.82
4000GCP.C03
REV. 11-30-08
DESIGNED XRL
DIGITIZED XRL
CHECKED XRL
DATE 07-30-15
DESIGN DATE 07-30-15
REV. NO. 1
DRAWING -----
SHEET NO -----
FILE BD27282
SHEET C03

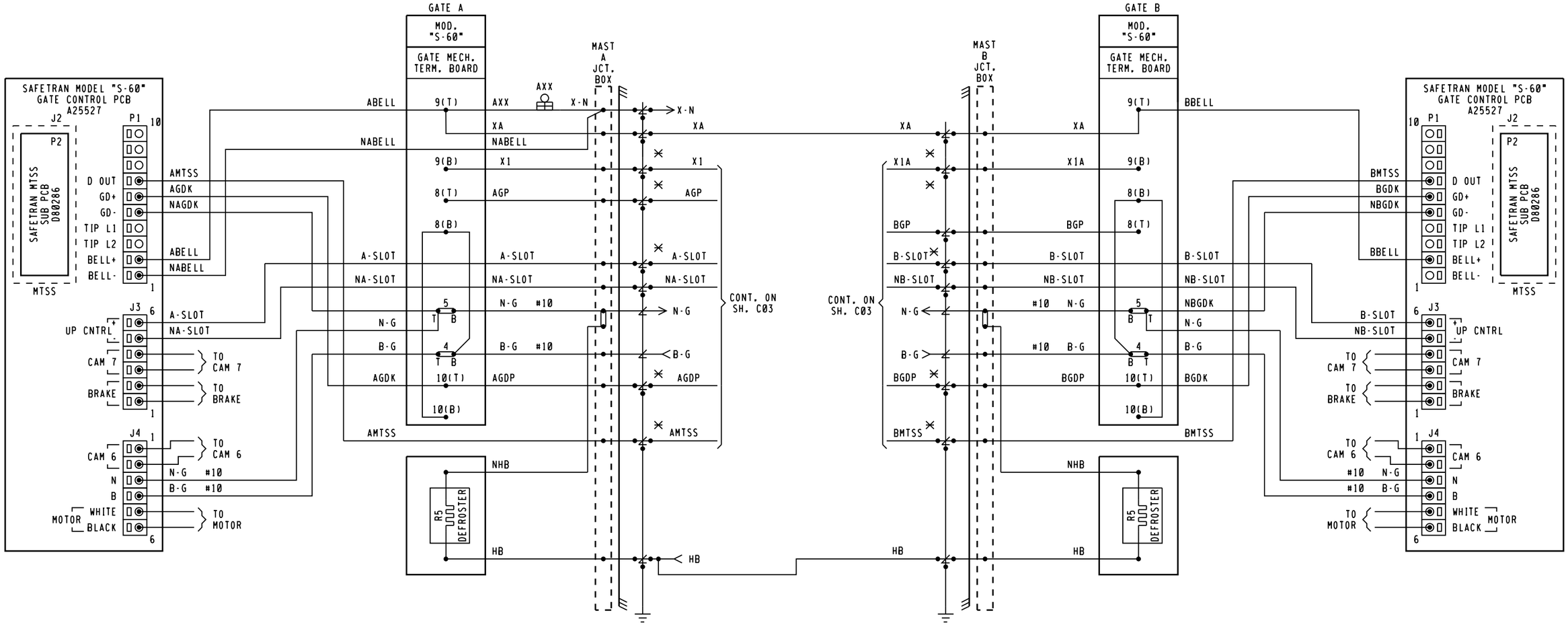

NOTES:
1. ✕ = TEST LINKS MUST BE OPEN TEMPORARILY FOR COLD START OF REPLACEMENT SSCC MODULES AND CLOSED IN SEQUENCE WITH MFR. INSTRUCTIONS. SEE SECTION 8.8 OF 4000GCP REFERENCE MANUAL.
2. = TERMINAL IN JCT. BOX BASE
3. ALL WIRING #16 UNLESS NOTED OTHERWISE.

NEW WORK
CXD1539741 IL2015023
07-30-15 XRL/S.BABU/
xorail

CSX TRANSPORTATION
RAIL TRANSPORT GROUP ENGINEERING
COMMUNICATIONS AND SIGNALS

OCEAN TRAIL ROAD 154634X

CROSSING WARNING DEVICE GATE CIRCUITRY
DECATUR, IL M.P. BD-272.82

4000GCP.C04
REV. 07-31-09

DESIGNED	DIGITIZED	CHECKED	DATE
XRL	XRL	XRL	07-30-15

DESIGN DATE	REV. NO.	DRAWING	SHEET NO	FILE	SHEET
07-30-15	1	-----	-----	BD27282	C04

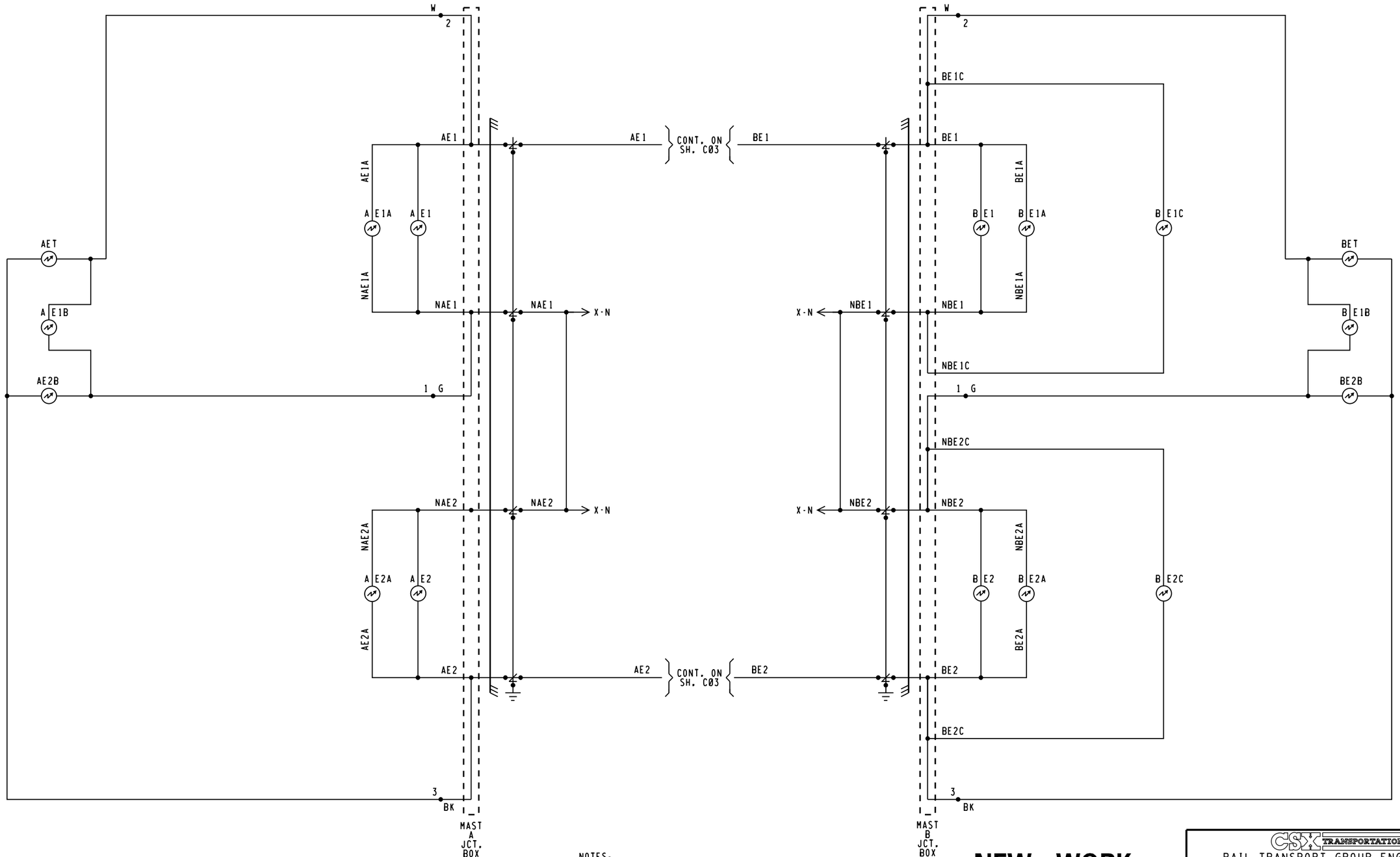

NOTES:

1. = TERMINAL IN JUNCTION BOX
2. WHEN 7 OR MORE LIGHTS ON A SINGLE STRUCTURE REFER TO SS382 FOR REQUIRED ARRESTERING
3. FEEDS TO ALL BUSSES AND LIGHT CIRCUITS ARE #10 FLEX
4. UNLESS NOTED ALL OTHER WIRING #16
5. CABLING SPECIFICATIONS SHOWN ON SH. S01

NEW WORK
CXD1539741 IL2015023
07-30-15 XRL/S.BABU/
xorail

CSX TRANSPORTATION
RAIL TRANSPORT GROUP ENGINEERING
COMMUNICATIONS AND SIGNALS

OCEAN TRAIL ROAD 154634X

CROSSING WARNING DEVICE LIGHT CIRCUITRY
DECATUR, IL M.P. BD-272.82

4000GCP.C05
REV. 07-31-09

DESIGNED	DIGITIZED	CHECKED	DATE
XRL	XRL	XRL	07-30-15

DESIGN DATE	REV. NO.	DRAWING	SHEET NO	FILE	SHEET
07-30-15	1	-----	-----	BD27282	C05

WAYSIDE ACCESS GATEWAY CONFIGURATION	
SITE ATCS ADDRESS	7.125.472.008.07.01 7.125.LLL.GGG.SS.DD
SERIAL INTERFACE	38,400,NONE,8,1/NOFLOW
SERIAL FORMAT	RAW
WAG TEST MODE	DISABLED
ECHELON ADDRESS	01.07
UDP PORTS	5000, 5001, 5002, 5003
ROUTE TABLE EXPIRY	5400 SEC
BROADCAST MEDIUM	IP ETHERNET
TCP PORTS	23, 10023, 6001, 6002
DHCP SERVER	DISABLED
IP ADDRESS	192.168.13.1
TYPE 7 ROUTE LENGTH	12--7RRLLLGGGSS
IP NETWORK MASK	255.255.255.0
WAG CIRCUIT ID	DISABLE
ROUTING REGION DOMAIN 1	OCGSERVER1.JAX.COM
ATCS SERVER UDP PORT NUMBER	6001
TELNET NUMBERS	WAG 6002, SERIAL 10023
DEFAULT GATEWAY IP	192.168.013.031

NOTE TO INSPECTOR, AT INSTALLATION OF WAG, OR UPDATE OF THE CONFIGURATION, OR UPDATE OF THE EXECUTIVE PROGRAM, MARK-UP CONFIGURATION TABLE FOR AS IN SERVICE PLANS

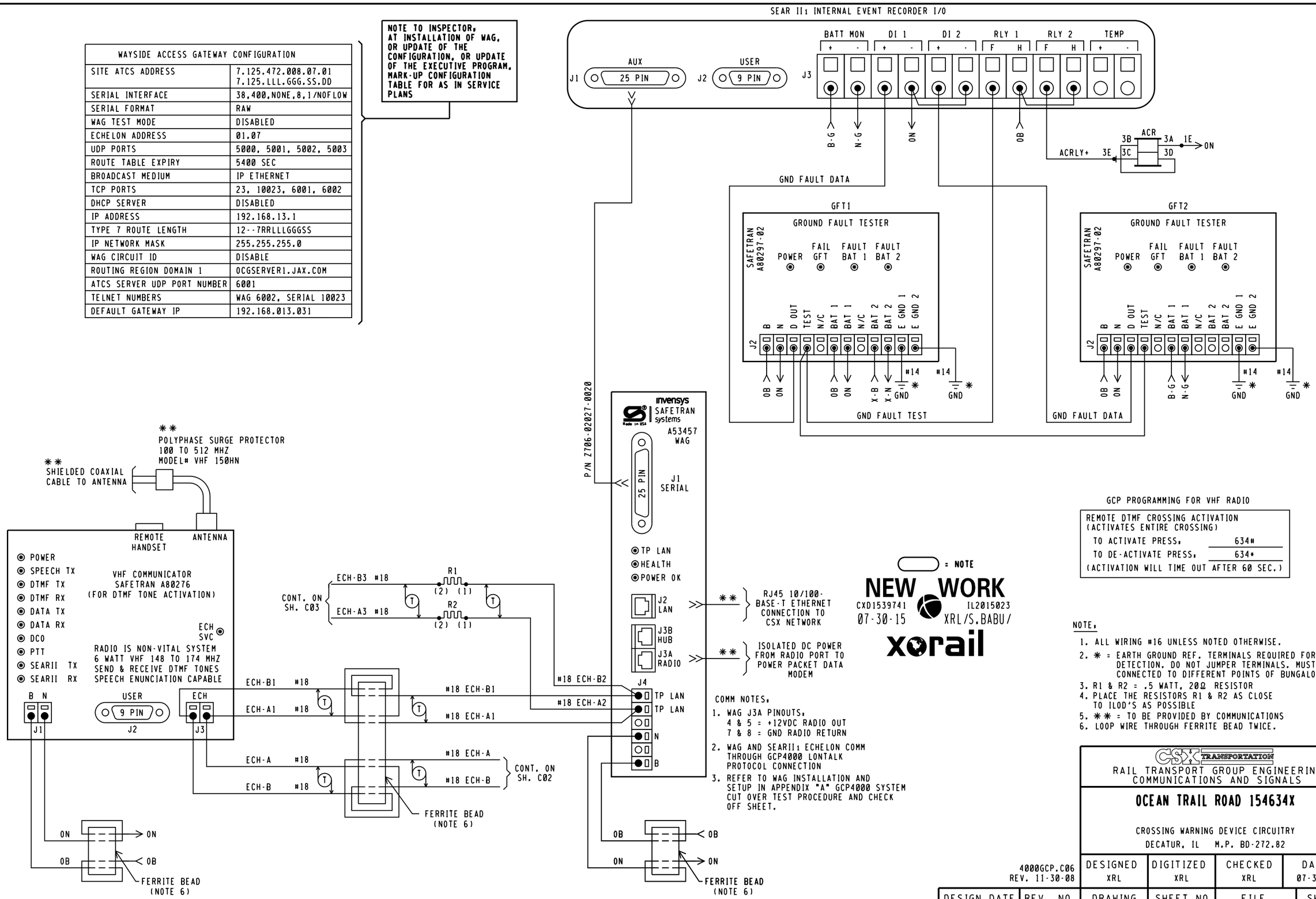

GCP PROGRAMMING FOR VHF RADIO

REMOTE DTMF CROSSING ACTIVATION (ACTIVATES ENTIRE CROSSING)	
TO ACTIVATE PRESS,	634#
TO DE-ACTIVATE PRESS,	634*
(ACTIVATION WILL TIME OUT AFTER 60 SEC.)	

NOTE:

1. ALL WIRING #16 UNLESS NOTED OTHERWISE.
2. * = EARTH GROUND REF. TERMINALS REQUIRED FOR DETECTION. DO NOT JUMPER TERMINALS. MUST BE CONNECTED TO DIFFERENT POINTS OF BUNGALOW.
3. R1 & R2 = .5 WATT, 20Ω RESISTOR
4. PLACE THE RESISTORS R1 & R2 AS CLOSE TO ILOD'S AS POSSIBLE
5. ** = TO BE PROVIDED BY COMMUNICATIONS
6. LOOP WIRE THROUGH FERRITE BEAD TWICE.

CSX TRANSPORTATION
RAIL TRANSPORT GROUP ENGINEERING
COMMUNICATIONS AND SIGNALS

OCEAN TRAIL ROAD 154634X

CROSSING WARNING DEVICE CIRCUITRY
DECATUR, IL M.P. BD-272.82

4000GCP.C06
REV. 11-30-08

DESIGNED	DIGITIZED	CHECKED	DATE
XRL	XRL	XRL	07-30-15

DESIGN DATE	REV. NO.	DRAWING	SHEET NO	FILE	SHEET
07-30-15	1	-----	-----	BD27282	C06

DEFAULTS AND/OR STYLE		FIELD RECORD
SEAR II1 EXECUTIVE PROGRAM	VERSION, 9V725A01	VERSION, _____
APPLICATION PROGRAM (IF LOADED)	VERSION, 9V864A01	VERSION, _____

NOTE TO INSPECTOR,
AT IN SERVICE OF SEAR II1 OR UPDATE OF ITS INTERNAL EXECUTIVE PROGRAM OR ITS CSXT APPLICATION PROGRAM, NOTE THE VERSION NUMBER OF EACH PROGRAM MUST IN THE BLANK FIELDS.

SITE SET UP MENU	
FUNCTION	LED DISPLAY
DATE/TIME	XX-XX-XXXX XX:XX:XX
AUTOMATIC DST ADJUSTMENT	YES
TIME ZONE	EASTERN
SITE NAME	OCEAN TRAIL ROAD
MILEPOST	BD-272.82
DOT NUMBER	154634X
TESTER TYPE	CROSSING
DATE FORMAT	MM-DD-YYYY
TEMP FORMAT	FAHRENHEIT
INDICATE HOLD (SEC)	0
INDICATE REFRESH (SEC)	60
SITE ATCS ADDRESS	7.125.472.008.99.01 (7.RRR.LLL.GGG.99.01)
SITE TYPE	COLLECTOR
OFFICE ADDRESS	2.125.00.0000 (2.RRR.NN.DDDD)
POLL ID	1
MODE	GEN/ATCS
WAMS XID	DISABLED
OFFICE COMM. DEVICE	■WAG (ECHELON) □DIRECT (RS232) □MCM (ECHELON) □MCM (RS232) □DIAL MODEM □S200 RADIO (RS422)
RADIO ATCS ADDR	7.125.472.008.07.01 (7.RRR.LLL.GGG.NN.01)
FIELD COMM. DEVICE	□WAG (ECHELON) ■NONE □VHF COMM. (ECHELON) □VHF COMM. (RS232) □SPREAD-SPECTRUM (RS232)
USER PORT BAUD	57,600
USER PORT DATA BITS	8
USER PORT PARITY	NONE
USER PORT STOP BITS	1
USER PORT FLOW CONTROL	NONE
AUX PORT BAUD	38,400
AUX PORT DATA BITS	8
AUX PORT PARITY	NONE
AUX PORT STOP BITS	1
AUX PORT FLOW CONTROL	NONE

INSPECTOR NOTE,
CURRENT VALUES MAY VARY DEPENDANT ON FIELD CONDITIONS, MARK UP PER ACTUAL READINGS FOR IN-SERVICE REVISION.

LIT BULB COUNT ON EACH CIRCUIT	NO.	TYPE OF BULB	CURRENT READING IN AMP. AT APPROX. 10.0 V ARRAY VOLTAGE
CURRENT SENSOR (1) AE1, LAMP SET UP	4	□BULBS ■LED	X.X
CURRENT SENSOR (1) AE2, LAMP SET UP	4	□BULBS ■LED	X.X
CURRENT SENSOR (2) BE1, LAMP SET UP	5	□BULBS ■LED	X.X
CURRENT SENSOR (2) BE2, LAMP SET UP	5	□BULBS ■LED	X.X

INSPECTOR NOTE,
VHF RADIO CHANNEL AND DATA CHANNEL = ENGINEERING CHANNEL. CHOOSE PROPER FREQUENCY FROM VHF RADIO CHANNELS.

VHF RADIO CHANNELS			
1	161.130	5	161.550
2	160.710	6	160.785
3	160.560	7	160.785
4	160.860	8	160.785

NOTE 7

MENU → CONFIGURATION → MODULES → ADD MODULE	
MODULE TYPE	WAG
MODULE NAME	DEFAULT
WAG ECHELON NODE	7

NOTE,
REFER TO WAG INSTALLATION AND SETUP IN APPENDIX "A" GCP4000 SYTEM CUT OVER, TEST PROCEDURE AND CHECK OFF SHEET.

MEASURE BATTERY VOLTAGE AT INPUT			
BATTERY VOLTAGE	OB	XXXX	VOLTS
BATTERY VOLTAGE	X-B	XXXX	VOLTS
BATTERY VOLTAGE	B-G	XXXX	VOLTS

INSPECTOR NOTE,
VOLTAGE VALUES MAY VARY DEPENDANT ON FIELD CONDITIONS, MARK UP PER ACTUAL READINGS FOR IN-SERVICE REVISION.

NOTE 6

PROGRAM MENU SELECT		
EDIT DIGITAL INPUTS	■ NO	□ YES
EDIT BATTERIES	■ NO	□ YES
EDIT RELAYS	■ NO	□ YES
EDIT TEST LED'S	■ NO	□ YES
EDIT ILOD1 SENSOR ☆	■ NO	□ YES
EDIT ILOD2 SENSOR ☆	■ NO	□ YES
EDIT ILOD3 SENSOR ☆	■ NO	□ YES
EDIT ILOD4 SENSOR ☆	■ NO	□ YES
EDIT VHF SETTINGS	■ NO	□ YES
GCP4K ATCS SUBNODE	16	

☆STAR = OPTIONS SHOWN DEPENDANT ON NUMBER OF ILODS SELECTED

( ) = NOTE

NEW WORK
CXD1539741 IL2015023
07-30-15 XRL/S.BABU/
xorail

CONTROL SYSTEM CONFIGURATION MENU QUESTIONS		
	OPTION	SELECTION
NOTE 9 -	RESET NAMES / MODULES	NO ■ YES □
	RAILROAD NUMBER	125
	CROSSING CONFIGURATION	NORMAL ■ SPLIT GATE □ EXTERNAL ENTRANCE GATE CONTROLLER(S) □
	AND1 USED AS XR	NO □ YES ■
	AND2 USED AS XR	NO ■ YES □
	AND3 USED AS XR	NO ■ YES □
	AND4 USED AS XR	NO ■ YES □
	AND5 USED AS XR	NO ■ YES □
	AND6 USED AS XR	NO ■ YES □
	AND7 USED AS XR	NO ■ YES □
	AND8 USED AS XR	NO ■ YES □
	ENTRANCE GATES*	0 □ 1 □ 2 ■ 3 □ 4 □ 5 □ 6 □ 7 □ 8 □
	GATE POSITION FAIL*	20 SECS.
NOTE 8 -	BATTERY BANKS*	1 □ 2 ■ 3 □
	BATT MON USED*	NO □ YES ■
	OB RESOLUTION*	0.2 □ 0.5 □ 1.0 ■
	X-B RESOLUTION*	0.2 □ 0.5 □ 1.0 ■ NOT PRESENT □
	X-B2 RESOLUTION*	0.2 □ 0.5 □ 1.0 □ NOT PRESENT ■
	BATT MON RESOLUTION*	0.2 □ 0.5 □ 1.0 ■ NOT PRESENT □
	INTERNAL CROSSING CONTROLLERS*	0 □ 1 □ 2 ■
	EXTERNAL CROSSING CONTROLLERS*	0 ■ 1 □ 2 □
	VHF COMMUNICATOR*	YES ■ NO □
	DTMF ACTVATION*	YES ■ NO □
NOTE 1	ACTIVATION CODE	634
	ACTIVATION TIMEOUT	(60 SEC)
	ILOD MODULES*	0 □ 1 □ 2 ■ 3 □ 4 □
NOTE 2 -	ANY LED BULBS USED*	NO □ YES ■
	AUTO INSPECTIONS*	YES □ NO ■
	BELL SENSORS*	0 □ 1 □ 2 ■ 3 □ 4 □
NOTE 3	BELL SENSOR TSS 1*	NO □ YES ■
	BELL SENSOR TSS 2*	NO □ YES ■
	BELL SENSOR TSS 3*	NO ■ YES □
	BELL SENSOR TSS 4*	NO ■ YES □
	BELL SENSOR TSS 5*	NO ■ YES □
	BELL SENSOR TSS 6*	NO ■ YES □
	BELL SENSOR TSS 7*	NO ■ YES □
	BELL SENSOR TSS 8*	NO ■ YES □
	BELL ON*	GATES LOWERING ■ GATES MOVING □ ALWAYS □
	GFT'S	YES ■ NO □
	BATTERIES ON GFT1	1 □ 2 ■
NOTE 4 -	GATE TIP SENSORS*	YES □ NO ■
	RTU	NO ■ YES □
NOTE 5	VHF VOICE CHANNEL	1 □ 2 □ 3 □ 4 □ 5 □ 6 □ 7 □ 8 □
	VHF DATA CHANNEL	1 □ 2 □ 3 □ 4 □ 5 □ 6 □ 7 □ 8 □
	USE NON-CRITICAL FEATURE*	NO ■ YES □
	FULL APPROACH MOVE ALARMS*	ACTIVATE ■ DO NOT ACTIVATE □
	ENABLE PASSWORD	NO ■ YES □

NOTES,

1. OPTION AVAILABLE IF VHF COMMUNICATOR = YES LAST 3 DIGITS OF DOT NUMBER.
2. OPTION AVAILABLE IF ILODS.
3. OPTION AVAILABLE IF BELL SENSORS.
4. OPTION AVAILABLE IF GATES.
5. OPTION AVAILABLE IF VHF RADIO.
6. ONLY YES IN SPECIAL CIRCUMSTANCES.
7. SELECT "MENU" THEN "CONFIGURATION" FROM SEAR II INTERFACE KEYPAD TO ACCESS MODULE CONFIGURATION MENU.
8. BATTERY BANKS* = NUMBER OF BANKS EXCLUDING THE BANK APPLIED TO THE BAT MON SEAR INPUT
9. YES ON INITIAL SETUP

CSX TRANSPORTATION
RAIL TRANSPORT GROUP ENGINEERING
COMMUNICATIONS AND SIGNALS

OCEAN TRAIL ROAD 154634X

SEAR II1 CONFIGURATION & FUNCTIONS
DECATUR, IL M.P. BD-272.82

4000GCP.C07
REV. 07-31-09

DESIGNED	DIGITIZED	CHECKED	DATE
XRL	XRL	XRL	07-30-15

DESIGN DATE	REV. NO.	DRAWING	SHEET NO	FILE	SHEET
07-30-15	1	-----	-----	BD27282	C07

INDEX

CONTENTS

SH. NO.		REVISION NO. 1	2	3	4	5	6	7	8	9
I01	INDEX AND REVISIONS	X	X	⊘						
S01	TRACK AND SIGNAL PLAN	X	X	⊘						
P01	MINIMUM PROGRAM STEPS REPORT CWE-99	X								
E01	POWER DISTRIBUTION	X								
C01	DETECTION DEVICE CONSIST CWE-99	X								
C02	DETECTION CIRCUITRY CWE-99	X								
C03	DETECTION CIRCUITRY CWE-99	X								
C04	CROSSING WARNING DEVICE GATE CIRCUITRY	X								
C05	CROSSING WARNING DEVICE LIGHT CIRCUITRY	X								
C06	CROSSING WARNING DEVICE CIRCUITRY	X								
C07	SEAR II1 CONFIGURATION & FUNCTIONS	X								

X = PLANS SENT TO FIELD (DISTRIBUTED)

X = PLANS AS-IN-SERVICED (UP TO DATE)

= NOTE

⊘⊘⊘ = IN

XXX = OUT

CXD1539741 IL2015023

07-30-15 XRL/S.BABU/

xorail

REVISIONS

REV. NO.	PROJECT NO.	DESIGN DATE	IN SERVICE DATE	REVISION DATE
1	IL2008018	06-23-08	05-27-09	07-28-09
2	IL2013017	05-17-13	03-26-15	05-01-15
3	IL2015023	07-30-15		

TO BE COMPLETED ON A.I.S.

CSX TRANSPORTATION

RAIL TRANSPORT GROUP ENGINEERING
COMMUNICATIONS AND SIGNALS

70TH STREET 154630V

INDEX AND REVISIONS
DECATUR, IL M.P. BD-270.99

DESIGNED	DIGITIZED	CHECKED	DATE
SAF/MLS	SAF/MLS	SAF/SWS	06-23-08

DESIGN DATE	REV. NO.	DRAWING	SHEET NO	FILE	SHEET
05-17-13	2	-----	-----	BD27099	I01

07-30-15 03

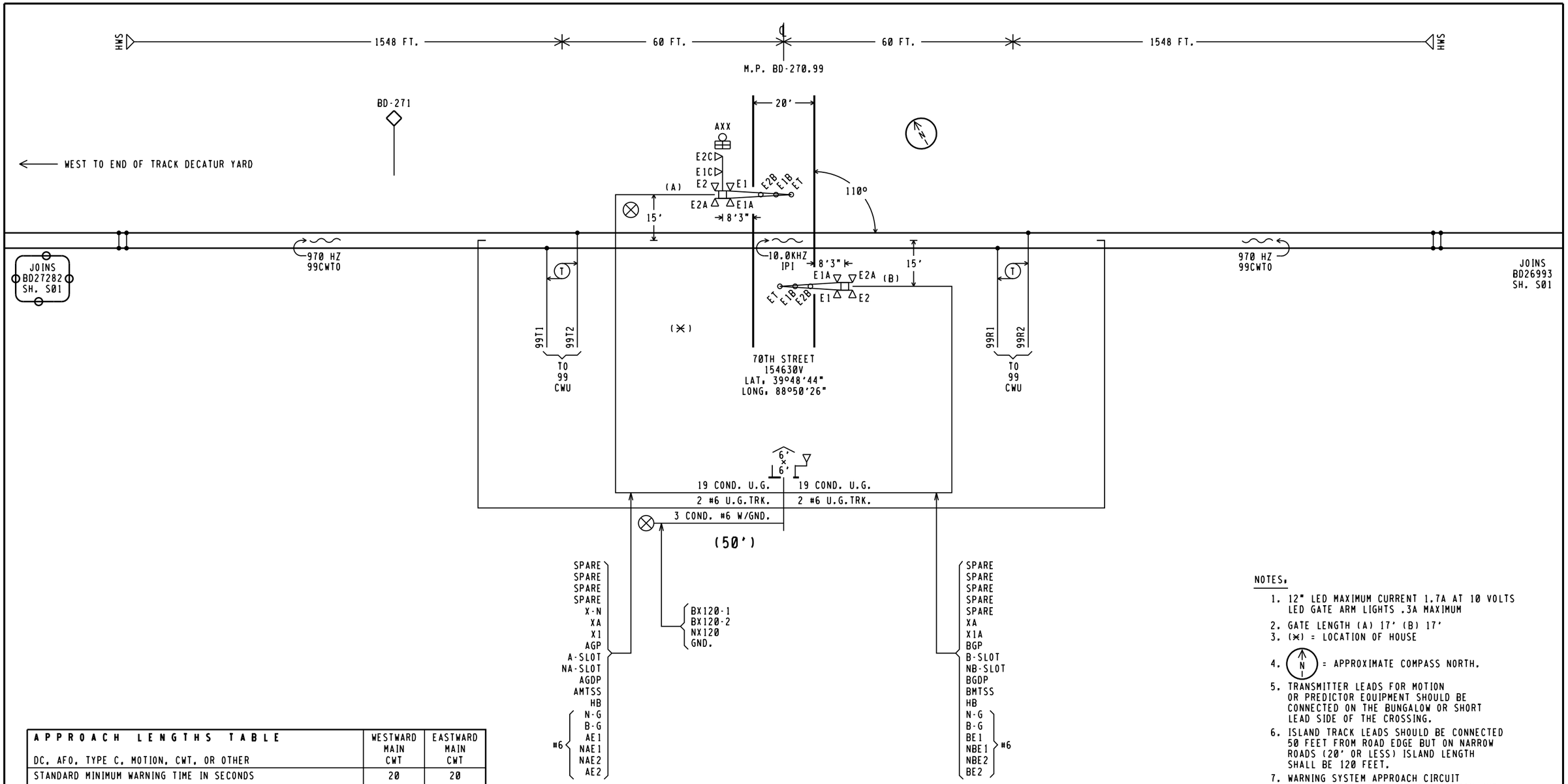

APPROACH LENGTHS TABLE DC, AFO, TYPE C, MOTION, CWT, OR OTHER	WESTWARD MAIN CWT	EASTWARD MAIN CWT
STANDARD MINIMUM WARNING TIME IN SECONDS	20	20
ROADWAY GATE TIME IN SECONDS	5	5
CLEARANCE TIME IN SECONDS	1	1
DOT TRAFFIC LIGHT SIMULTANEOUS PREEMPT TIME IN SECONDS ✳	0	0
DESIGNED WARNING TIME FOR TRAINS AT TIME TABLE SPEED	26 SEC.	26 SEC.
DOT TRAFFIC LIGHT ADVANCE PREEMPT TIME IN SECONDS ✳	0	0
CONTROL EQUIPMENT DECISION TIME IN SECONDS	5	5
DESIGNED DETECTION TIME FOR TRAINS AT TIME TABLE SPEED	31 SEC.	31 SEC.
TIME TABLE MAXIMUM TRAIN SPEED IN MILES PER HOUR	30	30
BUFFER SPEED IN MILES PER HOUR	5	5
TOTAL WARNING SYSTEM DESIGN SPEED IN MILES PER HOUR	35	35
APPROACH DISTANCE TO ISLAND EDGE IN FEET	1548	1548
HALF WIDTH OF ISLAND IN FEET	60	60
APPROXIMATE MILE POSTS FOR APPROACH CIRCUIT	271.29	270.69

✳AUTHORIZING AGENCY, NONE
✳DATE OF REQUIREMENT, NONE
✳AMOUNT OF TIME (SEC.), NONE

NOTES,

1. 12" LED MAXIMUM CURRENT 1.7A AT 10 VOLTS LED GATE ARM LIGHTS .3A MAXIMUM
2. GATE LENGTH (A) 17' (B) 17'
3. (✳) = LOCATION OF HOUSE
4. (N) = APPROXIMATE COMPASS NORTH.
5. TRANSMITTER LEADS FOR MOTION OR PREDICTOR EQUIPMENT SHOULD BE CONNECTED ON THE BUNGALOW OR SHORT LEAD SIDE OF THE CROSSING.
6. ISLAND TRACK LEADS SHOULD BE CONNECTED 50 FEET FROM ROAD EDGE BUT ON NARROW ROADS (20' OR LESS) ISLAND LENGTH SHALL BE 120 FEET.
7. WARNING SYSTEM APPROACH CIRCUIT DISTANCES ARE TO BE MEASURED FROM THE ISLAND TRACK CONNECTIONS.

= IN
= OUT

CXD1539741 07-30-15
IL2015023 XRL/S.BABU/
xorail

CSX TRANSPORTATION
RAIL TRANSPORT GROUP ENGINEERING
COMMUNICATIONS AND SIGNALS

70TH STREET 154630V

TRACK AND SIGNAL PLAN
DECATUR, IL M.P. BD-270.99

DESIGNED	DIGITIZED	CHECKED	DATE
SAF/MLS	SAF/MLS	SAF/SWS	06-23-08

DESIGN DATE	REV. NO.
05-17-13 (07-30-15)	2 (03)

DRAWING	SHEET NO	FILE	SHEET
-----	-----	BD27099	S01