PRIME WARNING TIME = 25 SECONDS

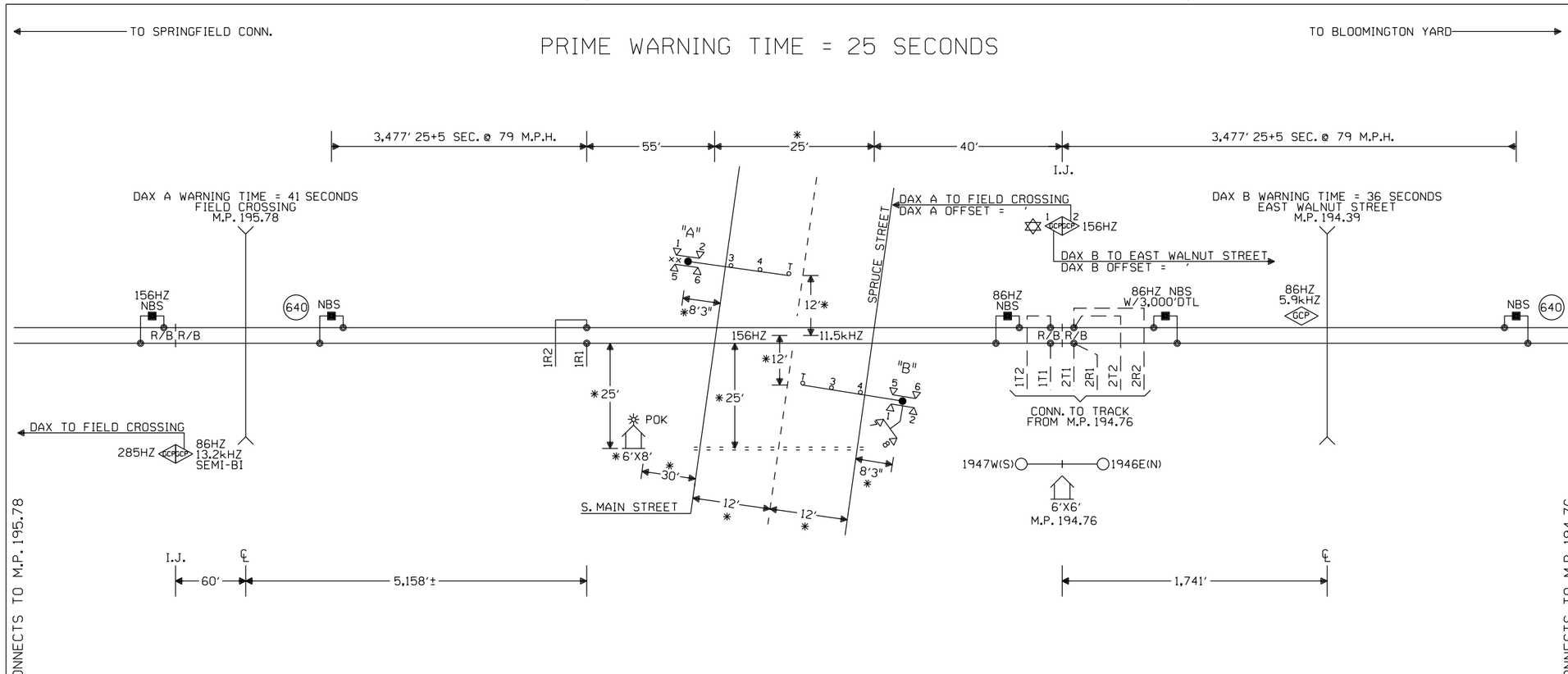

NOTES:

⊗ = TWISTED WIRES
INSULATED 1 TWIST PER FT.
ALL TRACK WIRES 2C. #6

TRANSMITTER AND RECEIVER LEADS
TO BE SEPARATED BY AT LEAST 12" IN TRENCH,
LENGTHS SHOULD NOT EXCEED MANUFACTURES
RECOMMENDATION.

TOP OF FOUNDATION TO BE AT SAME ELEVATION
AS THE SURFACE OF THE TRAVELED WAY & NO
MORE THAN 4" ABOVE THE SURFACE OF THE GROUND.

ALL BUNGALOW WIRING TO BE #16 AWG FLEX
UNLESS OTHERWISE SPECIFIED EXCEPT ALL GROUND
WIRE TO BE #6 AWG FLEX OR LARGER.

ALL WIRING IN GATE MECHANISM TO BE #10 "AWG FLEX".

REFER TO UP STANDARD DWG FOR BUNGALOW GROUNDING.

PORTABLE GENERATOR EXTENSION CORD
FOR 240V TO 240V IS PROVIDED AS WELL
AS A 120V TO 240V ADAPTER.

ALL LIGHTS TO BE 12" ROUNDELS.

= = = = = = 4" X 50' CONDUIT

LIGHTS: LED LIGHTS

GATE A: 20'*
GATE B: 20'*

xx = BELL

✡ = GCP TO OPERATE IN SEMI-BI
DIRECTIONAL MODE. USE TAB 627
COUPLER.

W(S) ←—○—→ E(N)

CONSTRUCTION NOTES:

1. * = FIELD VERIFY DIMENSIONS
2. REUSE EXISTING GATES, FLASHERS, BELL, GCP 3000, AND CROSSING HOUSE.
3. INSTALL LED'S IF NOT ALREADY INSTALLED.
4. THIS LOCATION TO BE REMOVED FROM SERVICE WHEN GOLDENROD DRIVE, M.P. 194.90, IS INSTALLED.

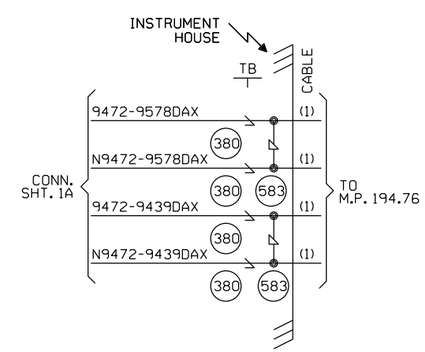

CABLE TABULATION

CABLE #1 7C #14 U.G.B.T. HOUSE TO M.P. 194.76
CABLE #2 (3) 2C #6 U.G.B.T. HOUSE TO M.P. 194.76

NEW SHEET

Designed: 07/18/15 TEMPORARY REVISIONS AT SPRUCE STREET, M.P. 194.72 Rec#: WO#: 14052 IS: / /NST/JVJ	MODIFICATION LEVEL		CIRCUIT MODIFICATIONS ARE NOT TO BE MADE WITHOUT AUTHORITY FROM THE OFFICE OF SIGNAL DESIGN	Date: 07/18/15 Des: NST Chk: AFE: 14052	UNION PACIFIC RAILROAD CHATHAM, ILLINOIS SPRUCE STREET SPRINGFIELD SUBDIVISION Office of AVP Engineering - Signal Omaha, Nebraska	Sh.: 1 DOT 294335B MP: 194.72 ID: CSL19472.1X
	Q.A. LAST LEVEL CHECKED	DU				
	LAST LEVEL MOD THIS TYPICAL	DU				
	LAST LEVEL BY DESIGNER	DU				
	CHANGED FROM TYPICAL? REV 01.24.11 4K 1TKBG.1	Y				

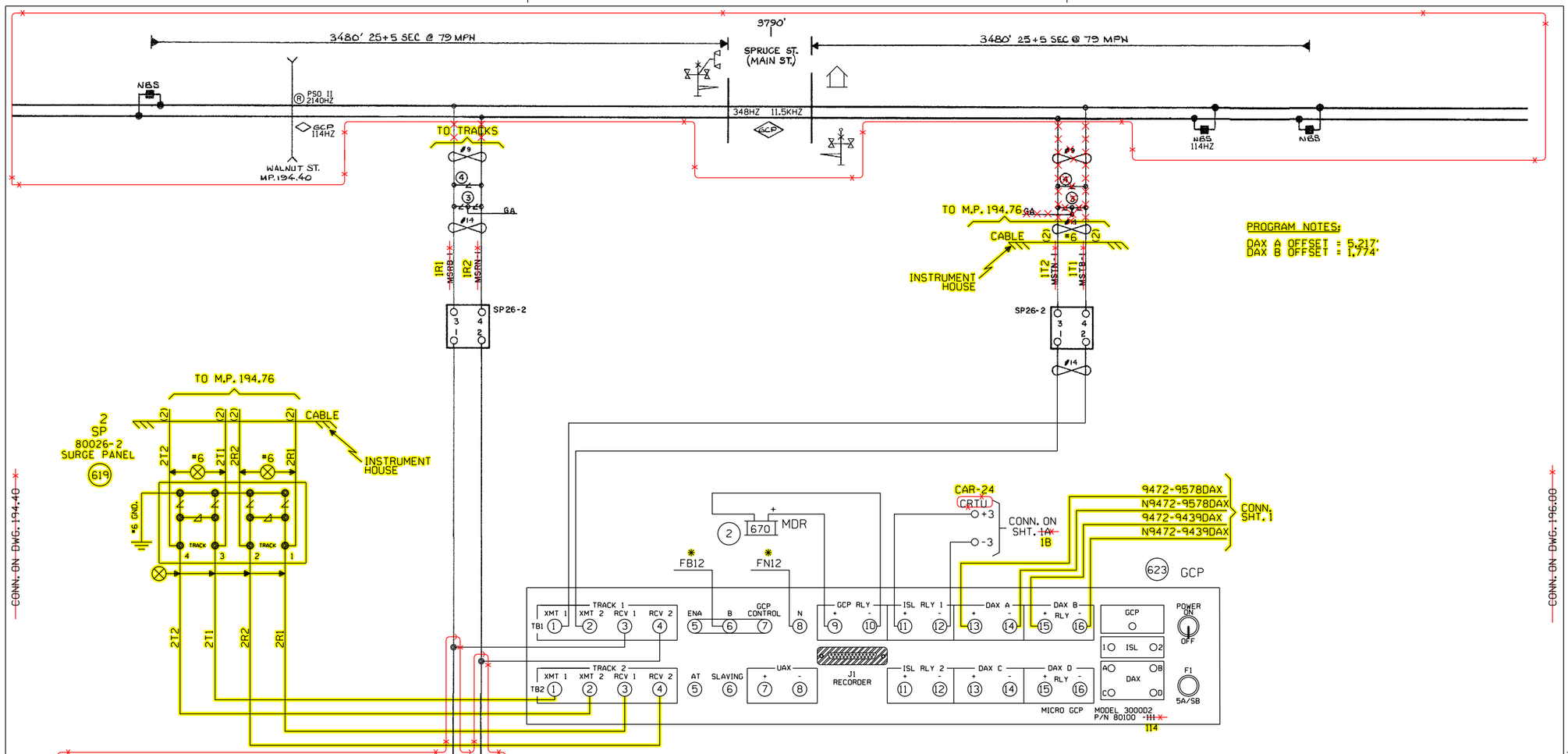

PROGRAM NOTES:
DAX A OFFSET = 5.217
DAX B OFFSET = 1.774

* - FIELD VERIFY. DCSP NOT SHOWN ON POWER SHEET.

TO BE VOIDED
03/09/12
W.O. 14052 NST/MJF

= IN
= OUT

NOTE:
∠ = HIGH VOLTAGE ARRESTER

CHATHAM, ILLINOIS
SPRUCE STREET
MP 194.72
SPRINGFIELD SUBDIVISION
DOT. #294-335B

CONN. ON DWG. 194.40

CONN. ON DWG. 196.00

TIF FILE ATTACHED TIF ID = CSL19472.1AX.TIF

Designed: 07/18/15 TEMPORARY REVISIONS AT SPRUCE STREET, M.P. 194.72 Rec#: WO#: 14052 IS: / / /NST/JVJ	Revised: 6-1-10 INSTALLED GCP 30000D2 AT SPRUCE ST. M.P. 194.72 PER FIELD AC. Rec#: 16839 WO#: / IS: 3-31-10 / DB/WIT/ /	REV. 3-20-08 PER IN-SERVICE 50 MILE E.C. PROJECT M.P. 191.07 TO 252.00 REC. #14126 MJD/WITT/WJB	REV. 7-22-03 INSTALLED CRTU W.O. #3327 REC. #11845 3-11-03 BH/WITT/NST/EML	CIRCUIT MODIFICATIONS ARE NOT TO BE MADE WITHOUT AUTHORITY FROM THE OFFICE OF SIGNAL DESIGN	DES: DIG: WITT CHK: A.F.E. ID= CSL19472.1X .1AX

UNION PACIFIC RAILROAD
BLOOMINGTON, ILLINOIS
TO VALLEY JCT., ILLINOIS
C.T.C. CIRCUITS
Office of AVP Engineering-Signal — Omaha, Nebraska

DATE 3-20-08
SHEET 1A
DWG 194.72
CSL

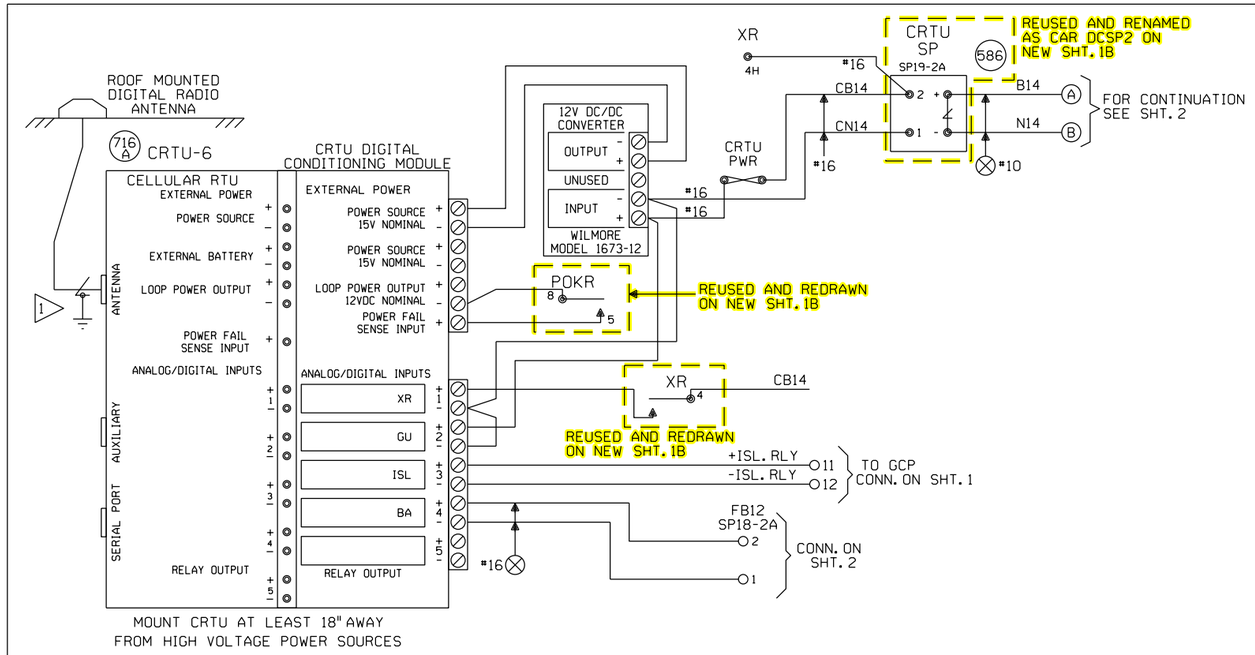

1 ANTENNA SURGE PROTECTOR - POLYPHASER CORP. W/ #10 AWG GROUNDING WIRE - 18 " MAX. LENGTH.

NOTES:

ALL DIODES 1N5060 OR 1N4004 UNLESS OTHERWISE NOTED.
✳ MOUNT ANTENNA ON TOP OF HOUSE.
ALL WIRES #18 UNLESS OTHERWISE NOTED.
ALL UNUSED 'NC' INPUTS MUST BE TIED HIGH TO BATTERY
ALL UNUSED ANALOG INPUTS MUST BE TIED HIGH TO BATTERY
ALL UNUSED 'NO' INPUTS MUST BE DISCONNECTED
NORMAL STATE FOR ANALOG CHANNELS IS EQUAL TO THE STORED NOMINAL VOLTAGE +120% OR -81%
CRTU FRONT PANEL DISPLAY CHART INDICATES NORMAL STATE

■ DIGITAL INPUT HIGH, OR POWER FAIL INPUT CLOSED
□ DIGITAL INPUT LOW, OR POWER FAIL INPUT OPEN

■ L ← LATCH IS SET BECAUSE CRTU DETECTED AN ALARM CONDITION
12.06V L ←

'sRUN MODE' 'sRUN MODE-SILENT'
↑ ↑ CRTU RADIO IS DISABLED. REPROGRAM CRTU WITH LAPTOP.

ANALOG AND AC INPUT MODULES MUST MOUNTED LESS THAN 12" FROM THE CRTU.

TO BE VOIDED
03/09/12
W.O. 14052 NST/MJF

UNIT INSTALLATION AND SETUP

R.R. SITE ID WHERE; SSSS = 4 CHARACTER SUBDIVISION ID. FILL WITH PRECEDING ZEROS AS REQUIRED. THE MAIN TRACK SUBDIVISION ID# IS IN THE CURRENT TIMETABLE. INDUSTRIAL LEADS, LEASED, AND LEAD TRACKS LISTED WITHIN THE SUBDIVISION MAY HAVE THEIR OWN UNIQUE SUBDIVISION ID#. ALWAYS REFER TO CURRENT PRINTED COPY OF THE TIMETABLE.
LLLLLLLL = 8 CHARACTERS USE DOT# AT CROSSINGS, AND
WDLLLLLL = USE 'WD' THEN MP# AT WAYSIDE LOCATIONS.
EXAMPLE = 0785WD1801.5UT
HBLLLLLL = USE 'HB' THEN MP# AT HBD SITES.
EXAMPLE = 0100-HB55.62TX
THE MP# MUST USE A DECIMAL POINT TO SEPARATE NUMBERS. FILL WITH PRECEDING DASHES AS REQUIRED.
AA = 2 CHARACTER STATE NAME FOR ALL LOCATIONS. MUST BE 14 CHARACTERS LONG, NO SPACES ALLOWED.

SITE IDENTIFIER: SSSSLLLLLLLLAA	0029-294335BIL
OPERATION TO RESUME:	RUN
SIGNAL STRENGTH dBm	
CARRIER ID	
FIRMWARE VERSION	2.3.12
BOOT VERSION:	
CMM VERSION:	
SERIAL NUMBER	
MIN ASSIGNMENT	
ESN: (MICROBURST ONLY)	
CONFIGURATION NET	CELLEMETRY MICROBURST
SILENCE INTERVAL	60 MINUTES
HEALTHCHECK INTERVAL	EVERY 2 DAYS
ALARM DEFER DELAY	240 MINUTES (4 HOURS)
SIGNAL STATUS	
SCADANET STATUS	
CALIBRATION CONSTANT CH1	
CALIBRATION CONSTANT CH2	
CALIBRATION CONSTANT CH3	
CALIBRATION CONSTANT CH4	
CALIBRATION CONSTANT PS	

FIELD PROVIDES: SAMPLED NOMINAL VOLTAGES, SCADANET STATUS CALIBRATION CONSTANTS, SERIAL NUMBER, AND SIGNAL STATUS.

CHANNEL SETUP - STANDARD CONFIGURATION D24:XR,GU,ISL,Ba

CHANNEL NORMAL STATE	SENSE (NO/NC)	NAME FUNCTION	RECOGNITION DELAY SECONDS ACTIVE	RECOGNITION DELAY SECONDS NORMAL	RETURN TO NORMAL	REPORTING MODE	ALARM LINKED CHANNEL	ALARM LINKED CRITERIA	EVENT LOGGING ENABLED OPTIONS
POWER FAIL (CH5) ■	POWER FAIL DETECT NO	PF1n-PK AC POWER FAIL	7,200 ALARM	300 NORMAL	ENABLED	ALERT	DISABLED	N/A	
CH1 □ ■	DIGITAL INPUT NO	CH1-XR XR DOWN TO LONG	1,800 ALARM	1 NORMAL	ENABLED	ALERT	DISABLED	N/A	
CH2 ✳✳✳ ■ □	DIGITAL INPUT NC	CH2-GU GATES NOT UP	180 ALARM	5 NORMAL	DISABLED	ALERT	CH1-XR	REQUIRE NORMAL (PHYSICAL)	
CH3 ■ □	DIGITAL INPUT NC	CH3-ISL ISLAND OCCUPIED DAX, PREEMPT WARNING TIME	1 ACTIVE	1 NORMAL	DISABLED	STATUS ONLY	DISABLED	N/A	
CH4 STORED NOMINAL VOLTAGE	ANALOG INPUT N/A	CH4-Ba/V BATTERY MONITOR BATTERY LOW	600 ALARM	1200 NORMAL	ENABLED	ALERT W/UPDATE	DISABLED	N/A	DIGITAL EVENTS
POWER SOURCE (CH6)	ANALOG INPUT N/A	PS-Ba/V BATTERY MONITOR BATTERY LOW	600 ALARM	1200 NORMAL	ENABLED	ALERT W/UPDATE	DISABLED	N/A	CH1-XR CH3-ISL

✳✳✳ ■ CH2-GU IS HIGH. CH2-GU IS (NC) WHEN THE GATES ARE UP AND CH1-XR IS LOW.
□ CH2-GU IS LOW. CH2-GU WILL NOT ALARM WHEN THE GATES ARE DOWN AND CH1-XR IS HIGH.

ANALOG CHANNEL	USEFUL RANGE VOLTS LOW	USEFUL RANGE VOLTS HIGH	DISPLAYED RANGE VOLTS LOW	DISPLAYED RANGE VOLTS HIGH	RELATIVE ALARM POINT LOW	RELATIVE ALARM POINT HIGH	ABSOLUTE ALARM POINT LOW	ABSOLUTE ALARM POINT HIGH	AUTOMATIC UPDATE INTERVAL	STORED NOMINAL VOLTAGE	SAMPLED NOMINAL VOLTAGE
CH4	0.0	30.00	0.0	30.00	81%	120%	10.0	29.0	14 DAYS	12.69	
POWER SOURCE	0.0	30.00	0.0	30.00	88%	120%	11.5	29.0	14 DAYS	13.0	

RELAY OUTPUT	NAME	ACTIVE	NORMAL	PULSE DURATION	15 SECONDS	StdCfg Ver: 2.3.4d REV'D 04-27-09
	RLY-OUT	SET-UP-OPEN	CLR-DN-CLOSE			

MAINTENANCE OPERATIONS

TO START OR ABORT ANY PROCEDURE
1. PRESS THE 'CANCEL' BUTTON FIRST

WHEN RESPONDING TO A CALL, PUT THE CRTU IN THE 'SILENCE ALARMS' MODE

1. PRESS 'SELECT' AND THEN '+ ARROW' BUTTON UNTIL
   DISPLAY: ACTION?
   SILENCE ALARMS
2. PRESS THE 'SELECT' BUTTON TWICE
3. CORRECT PROBLEM AND SIMULATE NORMAL TRAIN MOVEMENT THROUGH THE LOCATION
4. EXAMINE EACH CHANNEL ON THE CRTU
5. PRESS THE '+/- ARROW' BUTTON VERIFY ALL CHANNELS INDICATE A NORMAL STATE NORMAL STATES ARE ON THE CHANNEL SETUP CHART

CLEAR TIMERS, LATCHES AND SEND ALL NORMAL

1. DO STEPS #1 - #5 ABOVE, AND PRESS 'CANCEL'.
2. PRESS 'SELECT' AND THEN '- ARROW' BUTTON UNTIL
   DISPLAY: ACTION?
   SERVICE MODE
3. PRESS 'SELECT' AGAIN TO RESET TIMERS, AND IF
   DISPLAY: SERVICE MODE
   ALL NORMAL
4. PRESS 'SELECT' AGAIN TO CLEAR LATCHES, AND SEND ALL NORMAL, SKIP STEPS #5-#6.
5. HOWEVER, IF ALARMS ARE NOT CLEARED;
   DISPLAY: SERVICE MODE
   ALARMS PENDING/PRESENT
6. PRESS 'CANCEL', CORRECT PROBLEM AND REPEAT STEPS #2 THRU #5 UNTIL ALL NORMAL SENT.

TO CANCEL THE 'SILENCE ALARMS' MODE

1. PRESS 'SELECT' AND THEN '+ ARROW' BUTTON UNTIL
   DISPLAY: ACTION?
   CANCEL SILENCE
2. PRESS THE 'SELECT' BUTTON AGAIN

EXAMINE & SET BATTERY VOLTAGE NOMINAL VALUE

1. PRESS THE '+ ARROW' OR '- ARROW' BUTTON UNTIL THE DESIRED CHANNEL IS DISPLAYED.
   DISPLAY: PS-BA:
   13.83V NORMAL
2. VERIFY THE DISPLAYED READING WITH A DIGITAL VOLTMETER
3. PRESS THE 'SELECT' BUTTON, AND THE CRTU DISPLAY WILL SWITCH BETWEEN CURRENT/SAVED NOMINAL VOLTAGE VALUES.
   DISPLAY: NOMINAL ON #6? (CURRENT)
   13.83
   DISPLAY: SAVED NOMINAL 6 (STORED)
   12.69
4. PRESS THE 'SELECT' BUTTON AND THE CURRENT OR 'NOMINAL ON' VALUE WILL BE SAMPLED AND STORED AS THE 'SAVED NOMINAL' VALUE
5. VERIFY THE 'NOMINAL ON' AND 'SAVED NOMINAL' VALUES ARE EQUIVALENT, REPEAT STEPS #1 THRU #3 & PRESS THE 'CANCEL' BUTTON.

CHATHAM, ILLINOIS
SPRUCE STREET
M.P. 194.72
SPRINGFIELD SUBDIVISION
D.O.T.#294 335B

Revised: 6-1-10
INSTALLED GCP 3000D2 AT SPRUCE ST. M.P. 194.72 PER FIELD AC.
Rec#: 16839 WO#:
IS: 3-31-10 DB/WIT/ /

REV. 7-22-03
INSTALLED CRTU
W.O. #3327
REC. #11845
3-11-03
BH/WITT/NST/EML

MODIFICATION LEVEL	
Q.A. LAST LEVEL CHK'D.	
LAST LEVEL MOD. THIS TYP.	
LAST LEVEL BY DESIGNER.	
CHANGED FROM TYP.? Y/N	

CIRCUIT MODIFICATIONS ARE NOT TO BE MADE WITHOUT AUTHORITY FROM THE OFFICE OF SIGNAL DESIGN

DES: NST
DIG: NST
CHK:
A.F.E. 3327
ID= CSL19472.1AX

UNION PACIFIC RAILROAD
BLOOMINGTON, ILLINOIS
TO VALLEY JCT., ILLINOIS
C.T.C. CIRCUITS
Office of AVP Engineering-Signal Omaha, Nebraska

DATE 8-15-01
SHEET 1A
DWG 194.72
CSL

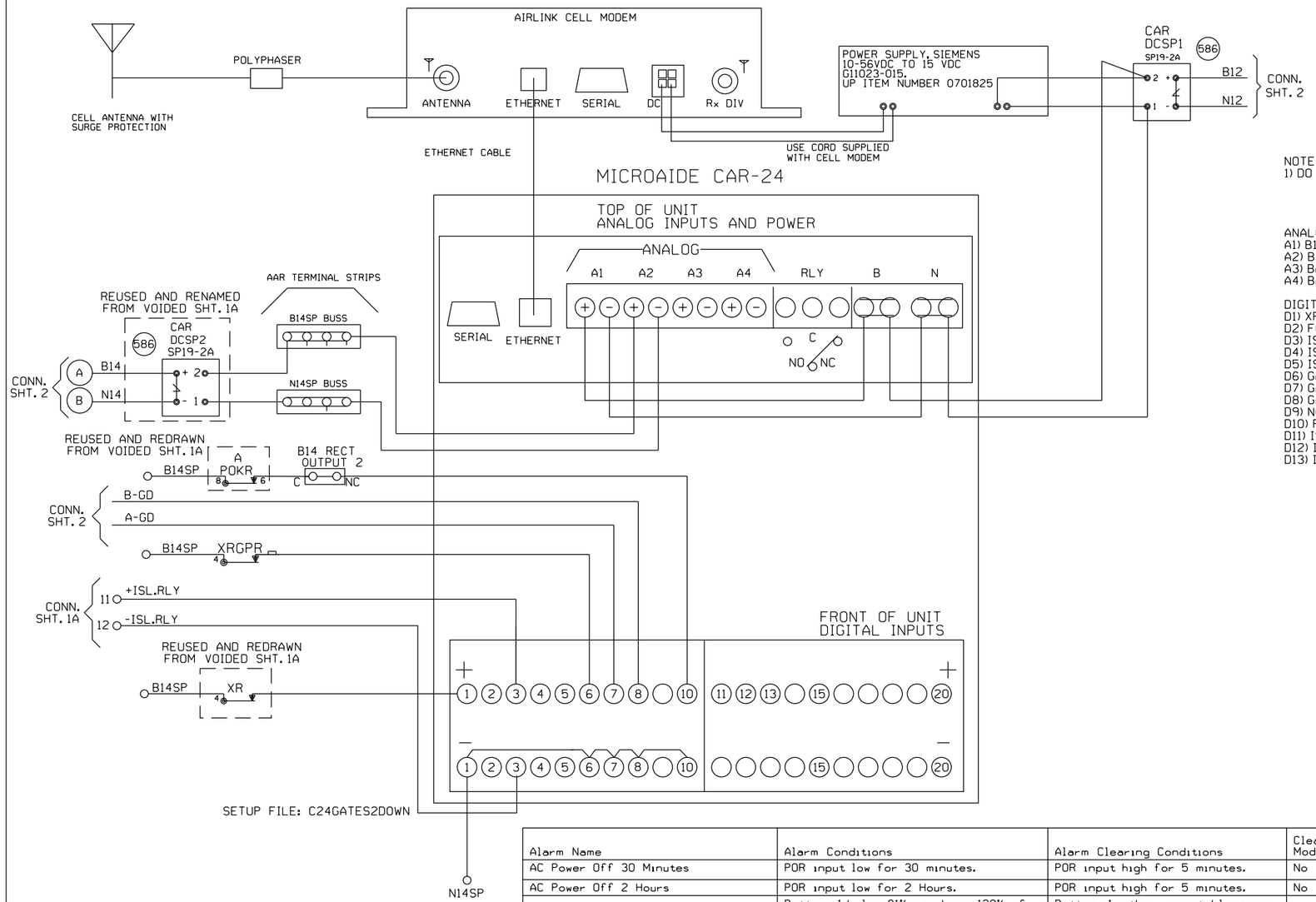

NOTE:
1) DO NOT JUMPER UNUSED INPUTS

ANALOG INPUTS:
A1) B12 BATTERY BANK
A2) B14 BATTERY BANK
A3) BATTERY BANK 3
A4) BATTERY BANK 4

DIGITAL INPUTS
D1) XR
D2) FOREIGN XR
D3) ISLAND 1
D4) ISLAND 2
D5) ISLAND 3
D6) GATE UP INDICATION
D7) GATE DOWN INDICATION 1
D8) GATE DOWN INDICATION 2
D9) NONE
D10) POWER OFF INDICATION
D11) ISLAND 4
D12) ISLAND 5
D13) ISLAND 6

Alarm Name	Alarm Conditions	Alarm Clearing Conditions	Cleared by Maintainer Mode?
AC Power Off 30 Minutes	POR input low for 30 minutes.	POR input high for 5 minutes.	No
AC Power Off 2 Hours	POR input low for 2 Hours.	POR input high for 5 minutes.	No
Battery Bank #1 Out of Range	Battery 1 below 81% or above 120% of the calibrated value for 5 minutes.	Battery 1 within acceptable range for 5 minutes.	No
Battery Bank #2 Out of Range	Battery 2 below 81% or above 120% of the calibrated value for 5 minutes.	Battery 2 within acceptable range for 5 minutes.	No
Battery Bank #3 Out of Range	Battery 3 below 81% or above 120% of the calibrated value for 5 minutes.	Battery 3 within acceptable range for 5 minutes.	No
Battery Bank #4 Out of Range	Battery 4 below 81% or above 120% of the calibrated value for 5 minutes.	Battery 4 within acceptable range for 5 minutes.	No
Xing Activation over 30 Min	XR input low for 30 minutes.	XR input high for 10 seconds.	Yes
Gate Not Up Properly	Gate Up indication is low and XR is high for 3 minutes.	Gate Up indication is high and XR is high for 2 seconds.	Yes
Gate Not Down Properly	Gate Down indication(s) is low and XR is low for 45 seconds.	Gate Down indication(s) is high and XR is low for 2 seconds.	Yes

NEW SHEET

Designed: 07/18/15
TEMPORARY REVISIONS AT SPRUCE STREET, M.P. 194.72
Rec#: WO#: 14052
IS: / /NST/JVJ

MODIFICATION LEVEL	
Q.A. LAST LEVEL CHECKED	DU
LAST LEVEL MOD THIS TYPICAL	DU
LAST LEVEL BY DESIGNER	DU
CHANGED FROM TYPICAL?	Y

REV 01.24.11 4K ACDCCAR24.3

CIRCUIT MODIFICATIONS ARE NOT TO BE MADE WITHOUT AUTHORITY FROM THE OFFICE OF SIGNAL DESIGN

Date: 07/18/15
Des: NST
Chk:
AFE: 14052

UNION PACIFIC RAILROAD
CHATHAM, ILLINOIS
SPRUCE STREET
SPRINGFIELD SUBDIVISION
Office of AVP Engineering - Signal Omaha, Nebraska

Sh.: 1B
DOT 294335B
MP: 194.72
ID: CSL19472.1BX

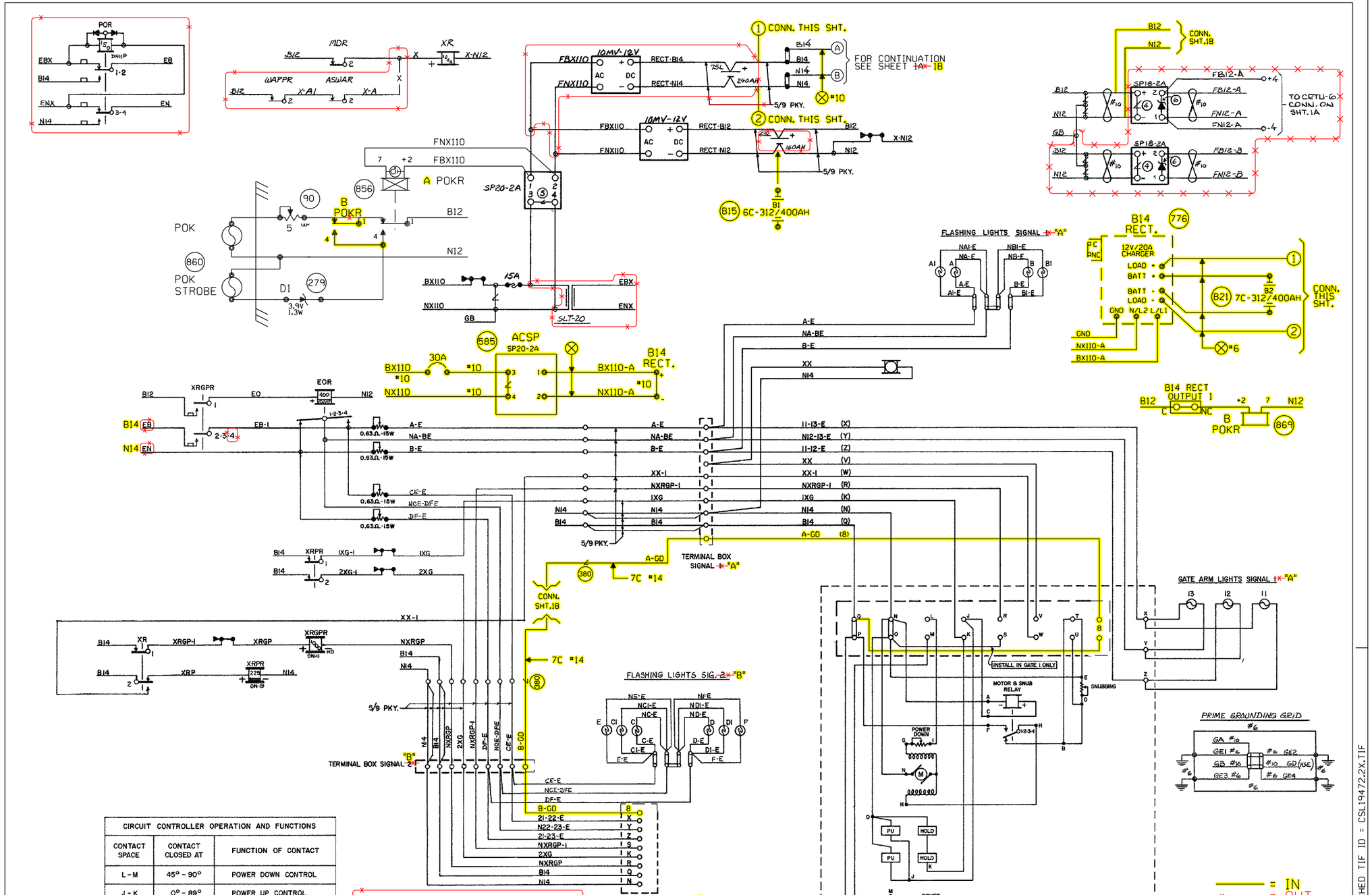

CIRCUIT CONTROLLER OPERATION AND FUNCTIONS		
CONTACT SPACE	CONTACT CLOSED AT	FUNCTION OF CONTACT
L-M	45° - 90°	POWER DOWN CONTROL
J-K	0° - 89°	POWER UP CONTROL
R-S	83° - 90°	GPXR CONTROL
V-W	5° - 90°	BELL CONTROL
T-U	0° - 5°	MOTOR SNUB CONTROL
8	0° - 5°	GATE DOWN CONTROL

TO BE VOIDED
03/09/12
W.O. 14052 NST/MJF

Designed: 07/18/15
TEMPORARY REVISIONS AT SPRUCE STREET, M.P. 194.72
Rec#: WO#: 14052
IS: NST/JVJ

Revised: 6-1-10
INSTALLED GCP 3000D2 AT SPRUCE ST. M.P. 194.72 PER FIELD AC.
Rec#: 16839 WO#:
IS: 3-31-10 DB/WIT

REV. 3-20-08
PER IN-SERVICE 50 MILE E.C. PROJECT M.P. 191.07 TO 252.00
REC. #14126
MJD/WITT/WJB

REV. 7-22-03
INSTALLED CRTU
W.O. #3327
REC. #11845
3-11-03
BH/WITT/NST/EML

CIRCUIT MODIFICATIONS ARE NOT TO BE MADE WITHOUT AUTHORITY FROM THE OFFICE OF SIGNAL DESIGN

DES:
DIG: WITT
CHK:
A.F.E.
ID: CSL19472.2X

UNION PACIFIC RAILROAD
BLOOMINGTON, ILLINOIS
TO VALLEY JCT., ILLINOIS
C.T.C. CIRCUITS
Office of AVP Engineering-Signal Omaha, Nebraska

DATE 3-20-08
SHEET 2
DWG 194.72
CSL

TIF FILE ATTACHED TIF ID = CSL19472.2X.TIF