REVISIONS			
NO.	DATE	BY	DESCRIPTION	APP. BY
1				
2				
3				
4				
5				

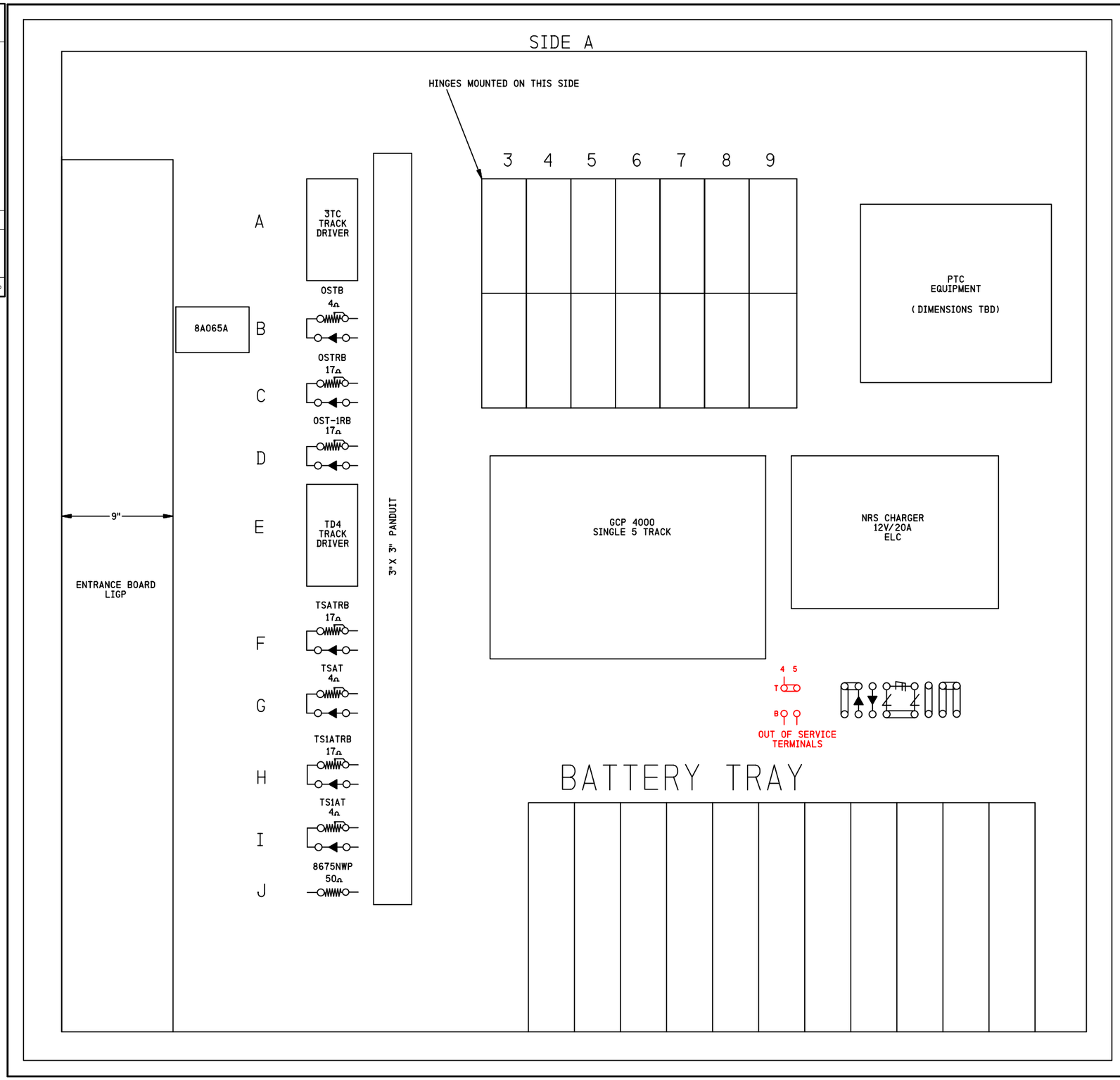

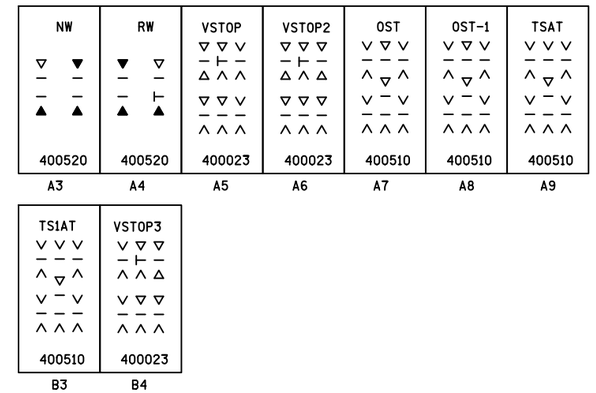

NOTES

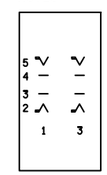

CN PART #
02-60-141
GRS PART #
A62-429
SAFETRAN PART #
400520

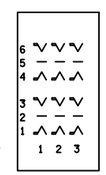

CN PART #
02-46-840
GRS PART #
A62-580
SAFETRAN PART #
400023

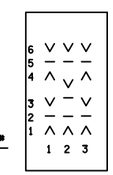

CN PART #
02-28-546
GRS PART #
A62-120
SAFETRAN PART #
400510

SII 08 SEP 2015

PROPOSED
DESIGN NO. 15-0099
RED-IN YELLOW-OUT

AS INSTALLED
DATE _____
BY _____
(PRINT NAME)

PROPOSED D	PROPOSED M	PROPOSED Y	REVISIONS	D	C	COMPLETED D	COMPLETED M	COMPLETED Y	C
			AS INSTALLED			01	03	12	KJA
08	09	15	M. 086. 55 UPGRADE	BEH	MRB				

REGION SOUTHERN
SUB. FREEPORT 382

SIGNALS AND COMMUNICATIONS HOMEWOOD
25 AUGUST 2011
DES. KJA
CH. GGS

SIDE "A"
RELAY DETAIL

ROCKFORD CP WEST
FRE-086. 71-19

fre-086. 71-19. dgn
14-OCT-2015

SIEMENS INDUSTRY INC

DES. : BEH	DATE: 08/09/15	JOB NO.: PICA10597
CKD. : MRB	ISSUE DATE: N/A	EST. NO.: XP-7959
DRN. : BEH	PLAN NO.: N/A	SHEET 19 OF 27
P TIME: 14:55	P DATE: 14-OCT-2015	CAD ID.: FRE-086. 71-19

SIEMENS INDUSTRY INC
LOUISVILLE DIVISION, LOUISVILLE, KY

REVISIONS				
NO.	DATE	BY	DESCRIPTION	APP. BY
1				
2				
3				
4				
5				

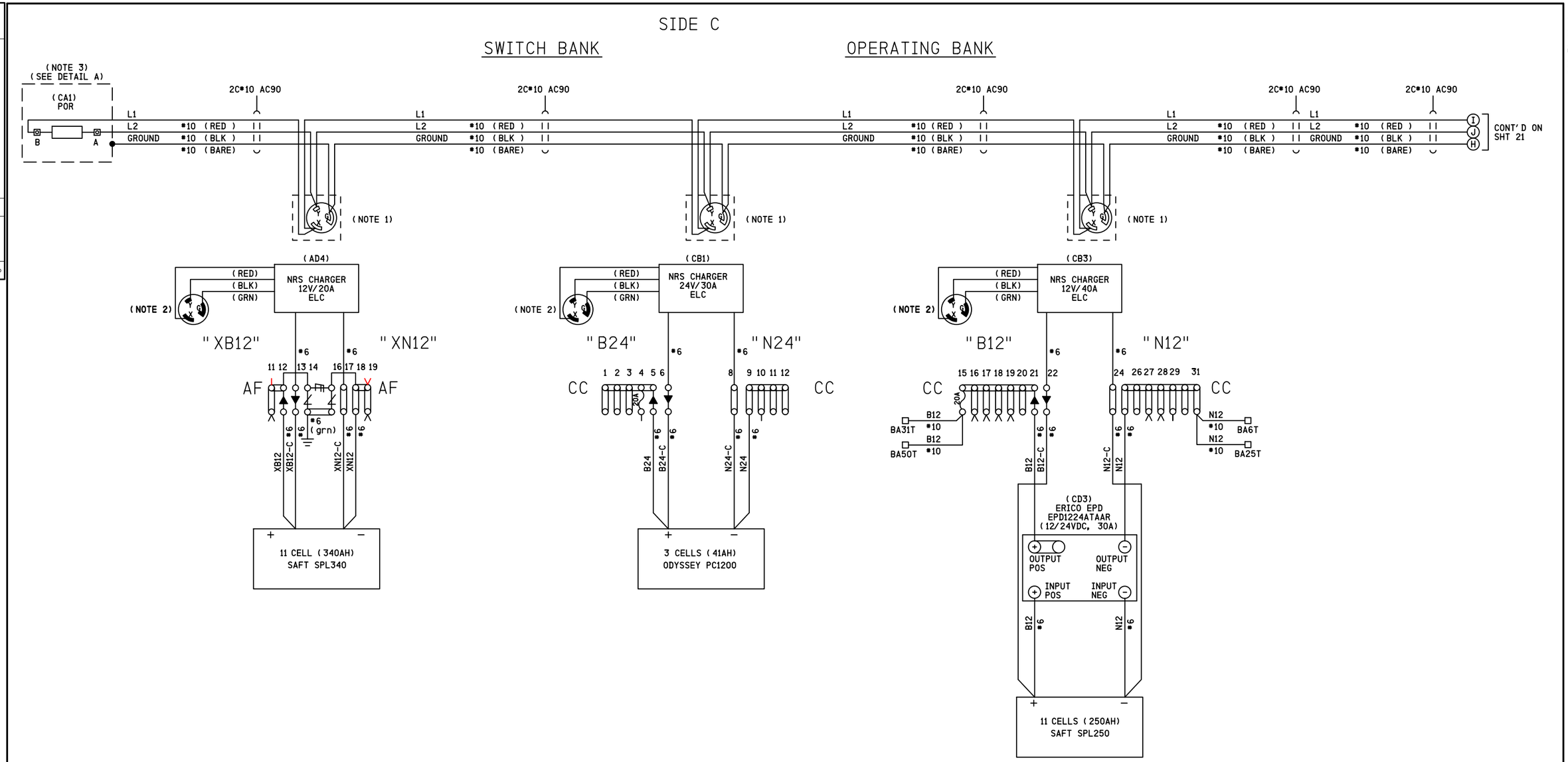

NOTES

1) 20A 250V TWIST LOCK
   RECEPTACLE HUBBELL HBL 2320
2) PLUG HUBBELL HBL 2321
   REFER TO PS-902 PAGE 6
3) INSTALL RELAY WITHIN
   HOFFMAN ASE8X8X4 JUNCTION BOX
   REFER TO PS-902 & PS-907
   FOR ADDITIONAL WIRING DETAILS

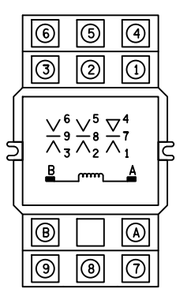

POR
RELAY DETAIL A

RELAY - POTTER & BRUMFIELD
MODEL KUP-14A15-240 SOCKET MOUNTABLE
240 VAC W/ 3 FORM C CONTACTS.

SOCKET - SCREW TERMINAL
MODEL 27E121
HOLD DOWN SPRING
MODEL 20C314

SII 08 SEP 2015

PROPOSED
DESIGN NO. 15-0099
RED-IN YELLOW-OUT

AS INSTALLED
DATE _____
BY _____
(PRINT NAME)

PROPOSED D	PROPOSED M	PROPOSED Y	REVISIONS	D	C	COMPLETED D	COMPLETED M	COMPLETED Y	C
			AS INSTALLED			01	03	12	KJA
08	09	15	M.086.55 UPGRADE	BEH	MRB				

REGION SOUTHERN
SUB. FREEPORT 382

SIGNALS AND COMMUNICATIONS HOMEWOOD
25 AUGUST 2011
DES. KJA
CH. GGS

SIDE "C" LAYOUT
DC DISTRIBUTION

ROCKFORD CP WEST
FRE-086.71-20

fre-086.71-20.dgn
14-OCT-2015

SIEMENS INDUSTRY INC			
DES.: BEH	DATE: 08/09/15	JOB NO.: PICA10597	
CKD.: MRB	ISSUE DATE: N/A	EST. NO.: XP-7959	
DRN.: BEH	PLAN NO.: N/A	SHEET 20 OF 27	
P TIME: 14:55	P DATE: 14-OCT-2015	CAD ID.: FRE-086.71-20	

SIEMENS INDUSTRY INC
LOUISVILLE DIVISION, LOUISVILLE, KY

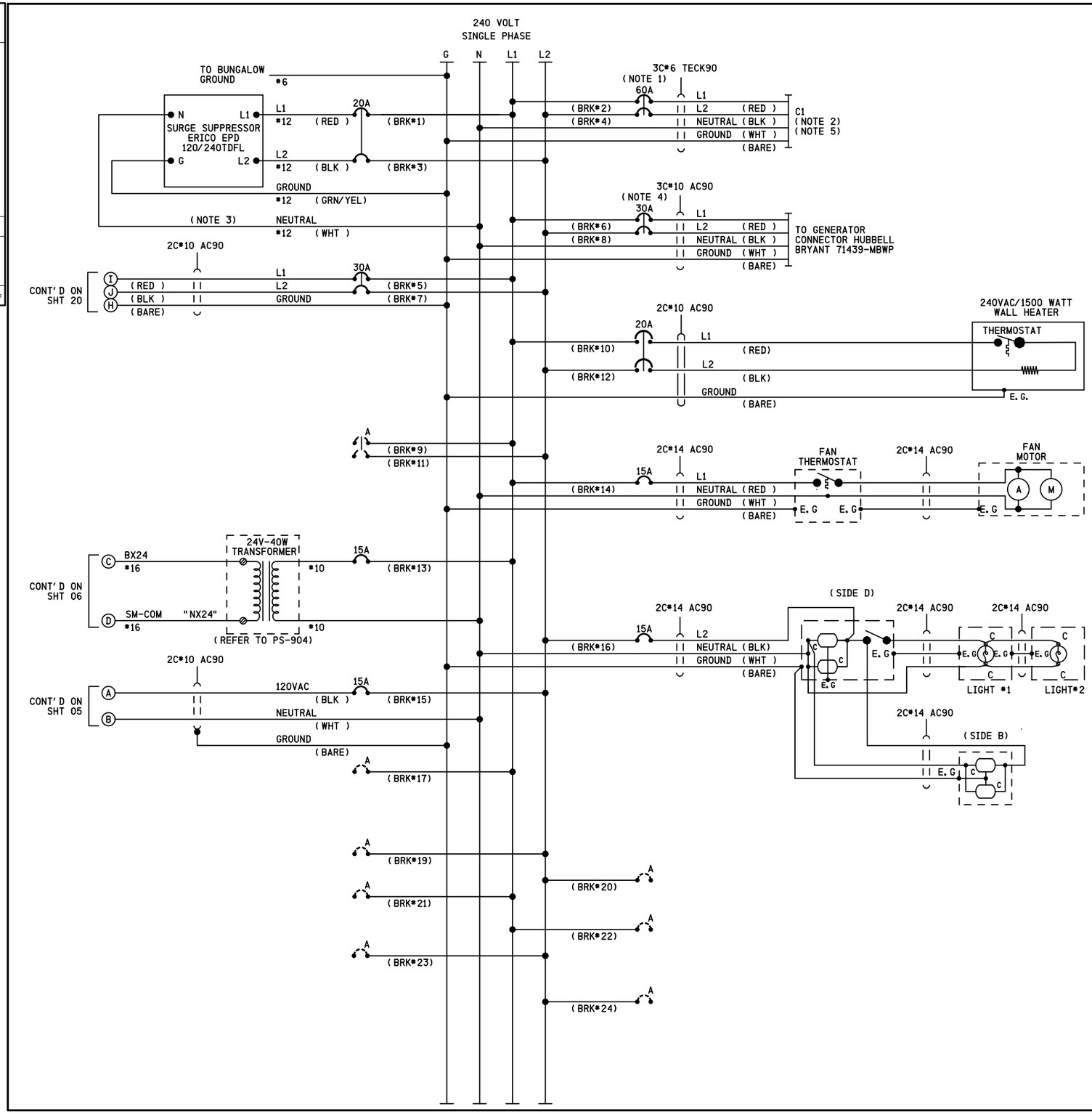

NOTES:

1) CIRCUIT BREAKER NOT TO EXCEED 60 AMPERES
   RETAINING KIT PK4DTIM4LA MUST BE USED WITH 60A BREAKER

2) FEEDER CIRCUIT BREAKER AT STUB POLE SERVICE PANEL,
   NOT TO EXCEED 60 AMPERES

3) KEEP LEADS AS SHORT AS POSSIBLE

4) A TRANSFER SWITCH KIT MUST BE INSTALLED BETWEEN
   THE SERVICE DISCONNECT BREAKER AND THE GENERATOR HOOK UP

5) WHERE SEPARATE GROUND WIRE EXISTS BETWEEN THE SERVICE AND THE
   LOAD CENTER, REMOVE THE BRASS COLORED BONDING SCREW
   (REFER TO SCHEMATIC ON BOX COVER FOR EXACT LOCATION)

" " -DENOTES REFERENCE, NOT WIRE TAG

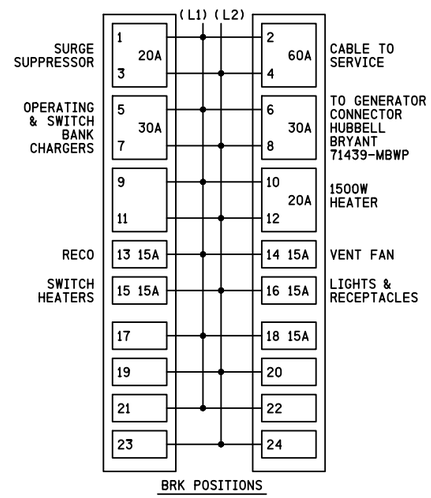

REVISIONS			
NO.	DATE	BY	DESCRIPTION	APP. BY
1				
2				
3				
4				
5				

SIEMENS INDUSTRY INC			
DES.: BEH	DATE: 08/09/15	JOB NO.: PICA10597	
CKD.: MRB	ISSUE DATE: N/A	EST. NO.: XP-7959	
DRN.: BEH	PLAN NO.: N/A	SHEET 21 OF 27	
P TIME: 14:55	P DATE: 14-OCT-2015	CAD ID.: FRE-086.71-21	

PROPOSED D	M	Y	REVISIONS	D	C	COMPLETED D	M	Y	C
			AS INSTALLED			01	03	12	KJA

REGION SOUTHERN
SUB. FREEPORT 382

SIGNALS AND COMMUNICATIONS
HOMEWOOD
25 AUGUST 2011

DES. KJA
CH. GGS

AC DISTRIBUTION

ROCKFORD CP WEST

FRE-086.71-21

fre-086.71-21.dgn
14-OCT-2015

SIEMENS INDUSTRY INC
LOUISVILLE DIVISION, LOUISVILLE, KY

REVISIONS				
NO.	DATE	BY	DESCRIPTION	APP. BY
1				
2				
3				
4				
5				

(AD3)

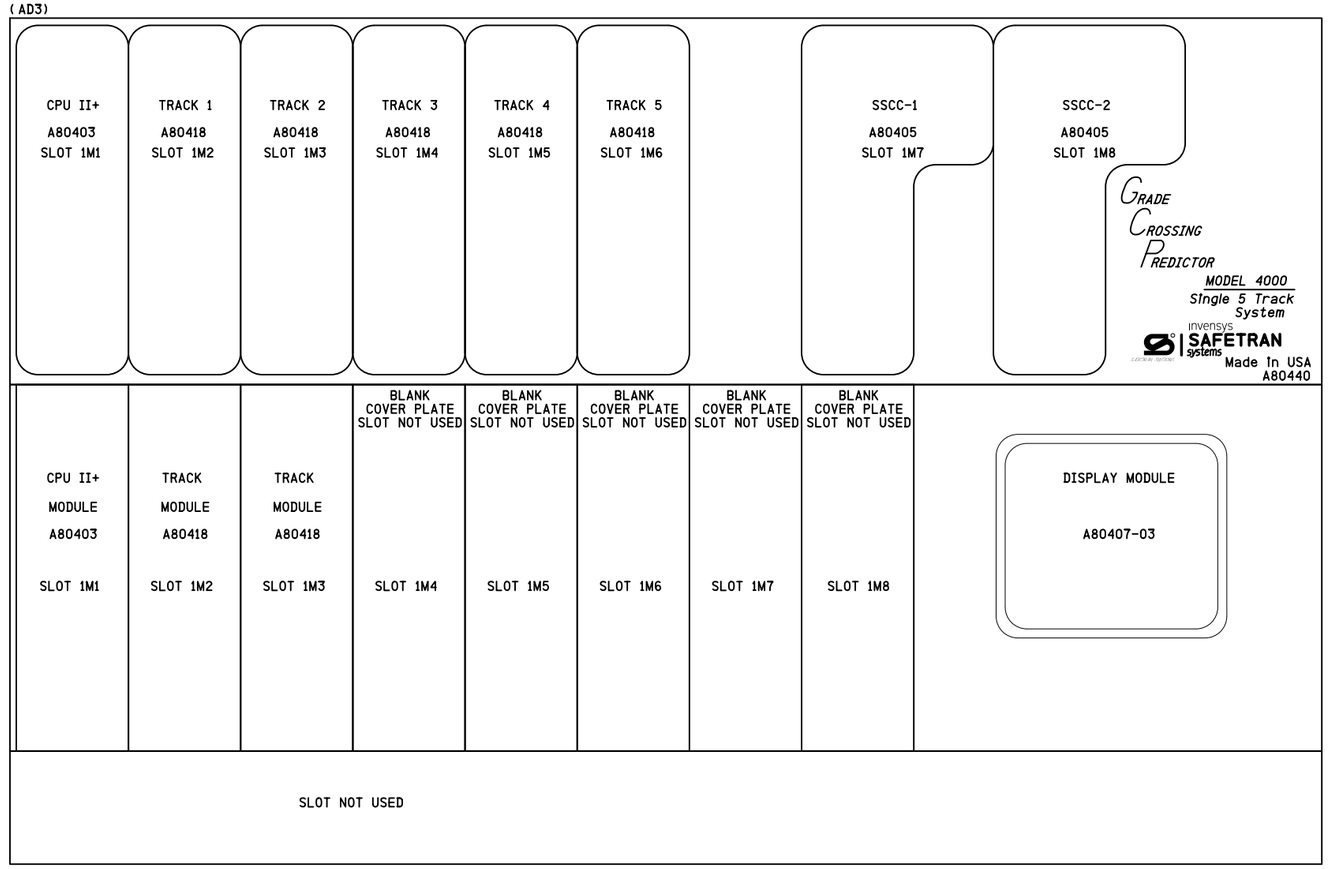

NOTES

1) DISABLE THE DISPLAY HEATER BY REMOVING JUMPER J-22 (LOCATED AT THE EDGE OF THE DISPLAY MODULE CARD THAT PLUGS INTO THE CHASSIS)

2) SET THE TRANSFER INTERVAL TIME TO 3 MINUTES BY SETTING DIPSWITCH S3 (LOCATED IN THE UPPER LEFT CORNER OF THE TRANSFER MODULE CARD) TO:

S3-0	S3-1	S3-2	S3-3	S3-4
1	1	0	0	0

WHERE 0 = UP/OPEN
1 = DOWN/CLOSED

ATTENTION!

ENSURE THE DISPLAY MODULE HEATER IS DISABLED
LEAVING THE DISPLAY HEATER ENABLED WILL REDUCE THE AMOUNT OF
BATTERY STANDBY TIME IN THE EVENT OF AN AC POWER FAILURE

HEATER FUNCTION IS JUMPER SELECTABLE ON THE DISPLAY MODULE BOARD
THREE OPTIONS ARE AVAILABLE
NORMAL LCD HTR (DEFAULT)
HI CURRENT
NO JUMPER (HEATER DISABLED)

PROPOSED D	PROPOSED M	PROPOSED Y	REVISIONS	D	C	COMPLETED D	COMPLETED M	COMPLETED Y	C
			AS INSTALLED			01	03	12	KJA

REGION SOUTHERN
SUB. FREEPORT 382

SIGNALS AND COMMUNICATIONS HOMEWOOD
21 NOVEMBER 2011
DES. PAC
CH. TPF

GCP 4000
CHASSIS & MODULE LAYOUT
ROCKFORD, IL

ROCKFORD CP WEST

FRE-086.71-22

GCP4000 SINGLE TRACK, BIDIRECTIONAL TYPICAL

fre-086.71-22.dgn
14-OCT-2015

SIEMENS INDUSTRY INC

DES.: BEH	DATE: 08/09/15	JOB NO.: PICA10597	
CKD.: MRB	ISSUE DATE: N/A	EST. NO.: XP-7959	
DRN.: BEH	PLAN NO.: N/A	SHEET 22 OF 27	
P. TIME: 14:55	P. DATE: 14-OCT-2015	CAD ID.: FRE-086.71-22	

SIEMENS INDUSTRY INC
LOUISVILLE DIVISION, LOUISVILLE, KY

REVISIONS				
NO.	DATE	BY	DESCRIPTION	APP. BY
1				
2				
3				
4				
5				

Program Report

Location and SIN

DOT Number: 290079Y
Milepost Number: 086.71
Site Name: ROCKFORD WEST

SIN: 762010010016

MCF and Template Selection

MCF Name: GCP-T6X-02-2.mcf
MCF Revision: 022
MCFCRC: 79225F13

Template = 4A:6 Remotes (OCCN)

Check Numbers

Office Check Number: 59423691
Config. Check Number: 55C7EE50
(Based on MCF Revision 022)

Program

BASIC: module configuration
Track 1/PSO 1 Slot = Track (OCCN)
Track 2/RIO 1 Slot = Track (OCCN)
Track 3/PSO 2 Slot = Not Used (OCCN)
Track 4/PSO 3 Slot = Not Used (OCCN)
Track 5/RIO 2 Slot = Not Used (OCCN)
Track 6/RIO 3 Slot = Not Used (OCCN)
SSCC-1 Slot = Not Used (OCCN)
SSCC-2 Slot = Not Used (OCCN)
SEAR Used = No (OCCN)

BASIC: MS/GCP operation
Track 1 : MS/GCP Operation = Yes (OCCN)
Track 2 : MS/GCP Operation = Yes (OCCN)

BASIC: Island operation
Track 1 : Island Used = No (OCCN)
Track 2 : Island Used = No (OCCN)

BASIC: preemption
Preempt Logic = No (OCCN)

BASIC: radio Dax links
Radio DAX link A Used = No (OCCN)
Radio DAX link B Used = No (OCCN)

BASIC: Vital Comms links
Vital Comms link 1 Used = No (OCCN)
Vital Comms link 2 Used = No (OCCN)

PREDICTORS: track 1
Track 1 : Prime Used = No (OCCN)
Track 1 : Dax A Used = Yes (OCCN)
Track 1 : Dax B Used = No (OCCN)
Track 1 : Dax C Used = No (OCCN)
Track 1 : Dax D Used = No (OCCN)
Track 1 : Dax E Used = No (OCCN)
Track 1 : Dax F Used = No (OCCN)
Track 1 : Dax G Used = No (OCCN)

PREDICTORS: track 2
Track 2 : Prime Used = No (OCCN)
Track 2 : Dax A Used = Yes (OCCN)
Track 2 : Dax B Used = No (OCCN)
Track 2 : Dax C Used = No (OCCN)
Track 2 : Dax D Used = No (OCCN)
Track 2 : Dax E Used = No (OCCN)
Track 2 : Dax F Used = No (OCCN)
Track 2 : Dax G Used = No (OCCN)

GCP: track 1
Track 1 : GCP Freq Category = Standard (Field)
Track 1 : GCP Frequency = 645 Hz (Field, TCN)
Track 1 : Approach Distance = 553 ft (Field, TCN)
Track 1 : Unl/Bl/Sim-Bidirnl = Unidirnl (OCCN, TCN)
Track 1 : GCP Transmit Level = High (Field, TCN)
Track 1 : Island Connection = No Islands (OCCN)
Track 1 : Directionally Wired = No (OCCN)
Track 1 : Island Distance = 0 ft (Field, TCN)
Track 1 : Computed Distance = 9999 ft (Field, TCN)
Track 1 : Linearization Steps = 100 (Field, TCN)

GCP: track 1 enhanced det
Track 1 : Inbound PS Sensitivity = High (Field)
Track 1 : Speed Limiting Used = Yes (Field)
Track 1 : Outbound False Act Lvl = Normal (Field)
Track 1 : Outbound PS Timer = 20 sec (Field)
Track 1 : Trailing Switch Logic = On (Field)
Track 1 : Post Joint Detn Time = 15 sec (OCCN)
Track 1 : Adv Appr Predn = No (OCCN)
Track 1 : Cancel Pickup Delay = This Isl (OCCN)

GCP: track 1 BIDAX RX
Track 1 : BIDAX To RX Appr = Not Used (OCCN)

GCP: track 1 BIDAX TX
Track 1 : BIDAX To TX Appr = Not Used (OCCN)

GCP: track 1 Dax A
Track 1 : Dax A Warning Time = 31 sec (OCCN)
Track 1 : Dax A Offset Distance = 634 ft (Field)
Track 1 : Switch MS EZ Level = 0 (OCCN)
Track 1 : Pickup Delay Mode = Auto (OCCN)
Track 1 : Dax A MS/GCP Mode = Pred (OCCN)
Track 1 : Dax A Pickup Delay = 8 sec (OCCN)
Track 1 : Dax A Enable = Not Used (OCCN)

GCP: track 1 pos start
Track 1 : Positive Start = Off (OCCN)
Track 1 : Sudden Shnt Det Used = No (OCCN)
Track 1 : Low EZ Detection Used = No (OCCN)

GCP: track 1 MS Control
Track 1 : MS/GCP Ctrl IP Used = No (OCCN)
Track 1 : MS Sensitivity Level = 0 (Field)
Track 1 : Compensation Level = 1300 (Field, TCN)
Track 1 : Warn Time-Ballast Comp = Low (Field, TCN)
Track 1 : Low EX Adjustment = 39 (Field)
Track 1 : Bidirn Dax Passthru = No (OCCN)
Track 1 : False Act on Train Stop = No (Field)
Track 1 : EX Limiting Used = Yes (Field)
Track 1 : EZ Correction Used = Yes (Field)

GCP: track 2
Track 2 : GCP Freq Category = Standard (Field)
Track 2 : GCP Frequency = 790 Hz (Field, TCN)
Track 2 : Approach Distance = 143 ft (Field, TCN)
Track 2 : Unl/Bl/Sim-Bidirnl = Unidirnl (OCCN, TCN)
Track 2 : GCP Transmit Level = High (Field, TCN)
Track 2 : Island Connection = No Islands (OCCN)
Track 2 : Directionally Wired = No (OCCN)
Track 2 : Island Distance = 0 ft (Field, TCN)
Track 2 : Computed Distance = 9999 ft (Field, TCN)
Track 2 : Linearization Steps = 100 (Field, TCN)

GCP: track 2 enhanced det
Track 2 : Inbound PS Sensitivity = High (Field)
Track 2 : Speed Limiting Used = Yes (Field)
Track 2 : Outbound False Act Lvl = Normal (Field)
Track 2 : Outbound PS Timer = 20 sec (Field)
Track 2 : Trailing Switch Logic = On (Field)
Track 2 : Post Joint Detn Time = 15 sec (OCCN)
Track 2 : Adv Appr Predn = No (OCCN)
Track 2 : Cancel Pickup Delay = This Isl (OCCN)

GCP: track 2 BIDAX RX
Track 2 : BIDAX To RX Appr = Not Used (OCCN)

GCP: track 2 BIDAX TX
Track 2 : BIDAX To TX Appr = Not Used (OCCN)

GCP: track 2 Dax A
Track 2 : Dax A Warning Time = 31 sec (OCCN)
Track 2 : Dax A Offset Distance = 1187 ft (Field)
Track 2 : Switch MS EZ Level = 0 (OCCN)
Track 2 : Pickup Delay Mode = Auto (OCCN)
Track 2 : Dax A MS/GCP Mode = Pred (OCCN)
Track 2 : Dax A Pickup Delay = 8 sec (OCCN)
Track 2 : Dax A Enable = Not Used (OCCN)

GCP: track 2 pos start
Track 2 : Positive Start = Off (OCCN)
Track 2 : Sudden Shnt Det Used = No (OCCN)
Track 2 : Low EZ Detection Used = No (OCCN)

GCP: track 2 MS Control
Track 2 : MS/GCP Ctrl IP Used = No (OCCN)
Track 2 : MS Sensitivity Level = 0 (Field)
Track 2 : Compensation Level = 1300 (Field, TCN)
Track 2 : Warn Time-Ballast Comp = Low (Field, TCN)
Track 2 : Low EX Adjustment = 39 (Field)
Track 2 : Bidirn Dax Passthru = No (OCCN)
Track 2 : False Act on Train Stop = No (Field)
Track 2 : EX Limiting Used = Yes (Field)
Track 2 : EZ Correction Used = Yes (Field)

AND: track Anding
AND 1 XR Used = Yes (OCCN)
AND 2 Used = No (OCCN)
AND 3 Used = No (OCCN)
AND 4 Used = No (OCCN)
AND 5 Used = No (OCCN)
AND 6 Used = No (OCCN)
AND 7 Used = No (OCCN)
AND 8 Used = No (OCCN)

AND: AND 1 XR
AND 1 XR Track 1 = Dax A (OCCN)
AND 1 XR Track 2 = Dax A (OCCN)
AND 1 Enable Used = No (OCCN)
AND 1 Wrap Used = No (OCCN)

ADVANCED: MS restart
MS/GCP Restart Used = No (OCCN)

ADVANCED: out of service
OOS Control = OOS IPs (OCCN)

ADVANCED: out of service 2
T1 OOS Control = OOS Input 1 (OCCN)
T2 OOS Control = OOS Input 2 (OCCN)
T1 OOS Controls = GCP Only (OCCN)
T2 OOS Controls = GCP Only (OCCN)

ADVANCED: track wrap circuits
Wrap LOS Timer = 5 sec (OCCN)
Track 1 Wrap Used = No (OCCN)
Track 2 Wrap Used = No (OCCN)

ADVANCED: trk 1 overrides
Track 1 : All Predictors Override Used = No (OCCN)
Track 1 : Dax A Override Used = No (OCCN)

ADVANCED: trk 2 overrides
Track 2 : All Predictors Override Used = No (OCCN)
Track 2 : Dax A Override Used = No (OCCN)

ADVANCED: OR logic
OR 1 Used = No (OCCN)
OR 2 Used = No (OCCN)
OR 3 Used = No (OCCN)
OR 4 Used = No (OCCN)

ADVANCED: Internal I/O 1
Pass Thrus = No (OCCN)
Int.1 Sets = Not Used (OCCN)
Int.1 Set by = Not Used (OCCN)
Int.2 Sets = Not Used (OCCN)
Int.2 Set by = Not Used (OCCN)
Int.3 Sets = Not Used (OCCN)
Int.3 Set by = Not Used (OCCN)
Int.4 Sets = Not Used (OCCN)
Int.4 Set by = Not Used (OCCN)

ADVANCED: Internal I/O 2
Int.5 Sets = Not Used (OCCN)
Int.5 Set by = Not Used (OCCN)
Int.6 Sets = Not Used (OCCN)
Int.6 Set by = Not Used (OCCN)
Int.7 Sets = Not Used (OCCN)
Int.7 Set by = Not Used (OCCN)
Int.8 Sets = Not Used (OCCN)
Int.8 Set by = Not Used (OCCN)

ADVANCED: Internal I/O 3
Int.9 Sets = Not Used (OCCN)
Int.9 Set by = Not Used (OCCN)
Int.10 Sets = Not Used (OCCN)
Int.10 Set by = Not Used (OCCN)
Int.11 Sets = Not Used (OCCN)
Int.11 Set by = Not Used (OCCN)
Int.12 Sets = Not Used (OCCN)
Int.12 Set by = Not Used (OCCN)

ADVANCED: Internal I/O 4
Int.13 Sets = Not Used (OCCN)
Int.13 Set by = Not Used (OCCN)
Int.14 Sets = Not Used (OCCN)
Int.14 Set by = Not Used (OCCN)
Int.15 Sets = Not Used (OCCN)
Int.15 Set by = Not Used (OCCN)
Int.16 Sets = Not Used (OCCN)
Int.16 Set by = Not Used (OCCN)

ADVANCED: site options
Daylight Savings = On (Field)
Units = Standard (OCCN)
Maint Call Rpt IP Used = No (OCCN)
Emergency Activate IP = No (OCCN)
EZ/EX Logging = Change (Field)
EZ/EX Point Change = 3 (Field)

OUTPUT: assignment page 1
OUT 1.1 = AND 1 XR (OCCN)
OUT 1.2 = Not Used (OCCN)
OUT 2.1 = Not Used (OCCN)
OUT 2.2 = Not Used (OCCN)

INPUT: assignment page 1
IN 1.1 = Out Of Service IP 1 (OCCN)
IN 1.2 = Not Used (OCCN)
IN 2.1 = Out Of Service IP 2 (OCCN)
IN 2.2 = Not Used (OCCN)

SITE: programming
Radio Subnode = 1 (Field)
Field Password = Off (OCCN)
Low Battery Enabled = Off (Field)

Configuration Package File

Filename: fre-086.71.pac

TEMPLATE MTF-4A

NOTES
1) DISTANCE(S) TO BE VERIFIED AT INSTALLATION
INDICATE SELECTED PROGRAMMED VALUE IF DIFFERENT THAN SHOWN
REFER TO 4000 GCP INSTRUCTION/INSTALLATION MANUAL
FOR PROGRAMMING PARAMETERS

2) PROGRAM TEXT HIGHLIGHTED IN RED INDICATES 4000 PROGRAM
MODIFICATIONS TO DEFAULT PROGRAM VALUES

3) VERIFY SET TIMER VALUE TO MATCH ACTUAL TRAIN MOVEMENT
WITHIN THE CROSSING APPROACH CIRCUITS

SII 08 SEP 2015

PROPOSED
DESIGN NO. 15-0099
RED-IN YELLOW-OUT

AS INSTALLED
DATE _____
BY _____
(PRINT NAME)

PROPOSED			REVISIONS	D	C	COMPLETED			C
D	M	Y				D	M	Y	

REGION SOUTHERN
SUB. FREEPORT 382

SIGNALS AND COMMUNICATIONS HOMEWOOD
08 SEPTEMBER 2015
DES. BEH
CH. MRB

GCP 4000
PROGRAM INFORMATION
ROCKFORD, IL
ROCKFORD CP WEST

FRE-086.71-23

fre-086.71-23.dgn
14-OCT-2015

SIEMENS INDUSTRY INC			
DES.: BEH	DATE: 08/09/15	JOB NO.: PICA10597	
CKD.: MRB	ISSUE DATE: N/A	EST. NO.: XP-7959	
DRN.: BEH	PLAN NO.: N/A	SHEET 23 OF 27	
P TIME: 14:55	P DATE: 14-OCT-2015	CAD ID.: FRE-086.71-23X	

SIEMENS INDUSTRY INC
LOUISVILLE DIVISION, LOUISVILLE, KY

REVISIONS				
NO.	DATE	BY	DESCRIPTION	APP. BY
1				
2				
3				
4				
5				

Program Report

Location and SIN

DOT Number: 000000A
Milepost Number: 86.71
Site Name: ROCKFORD WEST

SIN: 762010010016

MCF and Template Selection

MCF Name: GCP-T6X-02-4.mcf
MCF Revision: 24
MCFCRC: 09FC363B
Geo Unit UCN: FFFFFFFF

Template = 1A:6 Trk BI

Check Numbers

Office Check Number: 5958E76D
Config. Check Number: 6D741C79
(Based on MCF Revision 24)

Program

BASIC: module configuration
Track 1/PSO 1 Slot = Track
Track 2/RIO 1 Slot = Track
Track 3/PSO 2 Slot = Not Used
Track 4/PSO 3 Slot = Not Used
Track 5/RIO 2 Slot = Not Used
Track 6/RIO 3 Slot = Not Used
SSCC-1 Slot = Not Used
SSCC-2 Slot = Not Used
SEAR Used = No

BASIC: MS/GCP operation
Track 1 : MS/GCP Operation = Yes
Track 2 : MS/GCP Operation = Yes

BASIC: Island operation
Track 1 : Island Used = No
Track 2 : Island Used = No

BASIC: preemption
Preempt Logic = No

BASIC: radio Dax links
Radio DAX link A Used = No
Radio DAX link B Used = No

BASIC: Vital Comms links
Vital Comms link 1 Used = No
Vital Comms link 2 Used = No

PREDICTORS: track 1
Track 1 : Prime Used = No
Track 1 : Dax A Used = Yes
Track 1 : Dax B Used = No
Track 1 : Dax C Used = No
Track 1 : Dax D Used = No
Track 1 : Dax E Used = No
Track 1 : Dax F Used = No
Track 1 : Dax G Used = No

PREDICTORS: track 2
Track 2 : Prime Used = No
Track 2 : Dax A Used = Yes
Track 2 : Dax B Used = No
Track 2 : Dax C Used = No
Track 2 : Dax D Used = No
Track 2 : Dax E Used = No
Track 2 : Dax F Used = No
Track 2 : Dax G Used = No

GCP: track 1
Track 1 : GCP Freq Category = Standard
Track 1 : GCP Frequency = 645 Hz (TCN)
Track 1 : Approach Distance = 550 ft (TCN)
Track 1 : Uni/Bi/Sim-Bidirni = Unidirni (TCN)
Track 1 : GCP Transmit Level = High (TCN)
Track 1 : Island Connection = No Islands
Track 1 : Directionally Wired = No
Track 1 : Island Distance = 0 ft (TCN)
Track 1 : Computed Distance = 9999 ft (TCN)
Track 1 : Linearization Steps = 100 (TCN)

GCP: track 1 enhanced det
Track 1 : Inbound PS Sensitivity = High
Track 1 : Speed Limiting Used = Yes
Track 1 : Outbound False Act Lvl = Normal
Track 1 : Outbound PS Timer = 20 sec
Track 1 : Trailing Switch Logic = On
Track 1 : Post Joint Detn Time = 15 sec
Track 1 : Adv Appr Predn = No
Track 1 : Cancel Pickup Delay = This Isl

GCP: track 1 BIDAX RX
Track 1 : BIDAX To RX Appr = Not Used

GCP: track 1 BIDAX TX
Track 1 : BIDAX To TX Appr = Not Used

GCP: track 1 Dax A
Track 1 : Dax A Warning Time = 33 sec
Track 1 : Dax A Offset Distance = 741 ft
Track 1 : Switch MS EZ Level = 0
Track 1 : Pickup Delay Mode = Auto
Track 1 : Dax A MS/GCP Mode = Pred
Track 1 : Dax A Pickup Delay = 15 sec
Track 1 : Dax A Enable = Not Used

GCP: track 1 pos start
Track 1 : Positive Start = Off
Track 1 : Sudden Shnt Det Used = No
Track 1 : Low EZ Detection Used = No

GCP: track 1 MS Control
Track 1 : MS/GCP CtrlIP Used = No
Track 1 : MS Sensitivity Level = 0
Track 1 : Compensation Level = 1300 (TCN)
Track 1 : Warn Time-Ballast Comp = High (TCN)
Track 1 : Low EX Adjustment = 39
Track 1 : Bidirn Dax Passthru = No
Track 1 : False Act on Train Stop = No
Track 1 : EX Limiting Used = Yes
Track 1 : EZ Correction Used = Yes

GCP: track 2
Track 2 : GCP Freq Category = Standard
Track 2 : GCP Frequency = 790 Hz (TCN)
Track 2 : Approach Distance = 109 ft (TCN)
Track 2 : Uni/Bi/Sim-Bidirni = Unidirni (TCN)
Track 2 : GCP Transmit Level = High (TCN)
Track 2 : Island Connection = No Islands
Track 2 : Directionally Wired = No
Track 2 : Island Distance = 0 ft (TCN)
Track 2 : Computed Distance = 131 ft (TCN)
Track 2 : Linearization Steps = 100 (TCN)

GCP: track 2 enhanced det
Track 2 : Inbound PS Sensitivity = High
Track 2 : Speed Limiting Used = Yes
Track 2 : Outbound False Act Lvl = Normal
Track 2 : Outbound PS Timer = 20 sec
Track 2 : Trailing Switch Logic = On
Track 2 : Post Joint Detn Time = 15 sec
Track 2 : Adv Appr Predn = No
Track 2 : Cancel Pickup Delay = This Isl

GCP: track 2 BIDAX RX
Track 2 : BIDAX To RX Appr = Not Used

GCP: track 2 BIDAX TX
Track 2 : BIDAX To TX Appr = Not Used

GCP: track 2 Dax A
Track 2 : Dax A Warning Time = 33 sec
Track 2 : Dax A Offset Distance = 1291 ft
Track 2 : Switch MS EZ Level = 0
Track 2 : Pickup Delay Mode = Auto
Track 2 : Dax A MS/GCP Mode = Pred
Track 2 : Dax A Pickup Delay = 15 sec
Track 2 : Dax A Enable = Not Used

GCP: track 2 pos start
Track 2 : Positive Start = Off
Track 2 : Sudden Shnt Det Used = No
Track 2 : Low EZ Detection Used = No

GCP: track 2 MS Control
Track 2 : MS/GCP CtrlIP Used = No
Track 2 : MS Sensitivity Level = 0
Track 2 : Compensation Level = 1300 (TCN)
Track 2 : Warn Time-Ballast Comp = High (TCN)
Track 2 : Low EX Adjustment = 39
Track 2 : Bidirn Dax Passthru = No
Track 2 : False Act on Train Stop = No
Track 2 : EX Limiting Used = Yes
Track 2 : EZ Correction Used = Yes

AND: track Anding
AND 1 XR Used = Yes
AND 2 Used = No
AND 3 Used = No
AND 4 Used = No
AND 5 Used = No
AND 6 Used = No
AND 7 Used = No
AND 8 Used = No

AND: AND 1 XR
AND 1 XR Track 1 = Dax A
AND 1 XR Track 2 = Dax A
AND 1 Enable Used = No
AND 1 Wrap Used = No

ADVANCED: MS restart
MS/GCP Restart Used = No

ADVANCED: out of service
OOS Control = Display
OOS Timeout = Yes
OOS Timeout = 1 hrs

ADVANCED: track wrap circuits
Wrap LOS Timer = 5 sec
Track 1 Wrap Used = No
Track 2 Wrap Used = No

ADVANCED: trk 1 overrides
Track 1 : All Predictors Override Used = No
Track 1 : Dax A Override Used = No

ADVANCED: trk 2 overrides
Track 2 : All Predictors Override Used = No
Track 2 : Dax A Override Used = No

ADVANCED: OR logic
OR 1 Used = No
OR 2 Used = No
OR 3 Used = No
OR 4 Used = No

ADVANCED: Internal I/O 1
Pass Thrus = No
Int.1 Sets = Not Used
Int.1 Set by = Not Used
Int.2 Sets = Not Used
Int.2 Set by = Not Used
Int.3 Sets = Not Used
Int.3 Set by = Not Used
Int.4 Sets = Not Used
Int.4 Set by = Not Used

ADVANCED: Internal I/O 2
Int.5 Sets = Not Used
Int.5 Set by = Not Used
Int.6 Sets = Not Used
Int.6 Set by = Not Used
Int.7 Sets = Not Used
Int.7 Set by = Not Used
Int.8 Sets = Not Used
Int.8 Set by = Not Used

ADVANCED: Internal I/O 3
Int.9 Sets = Not Used
Int.9 Set by = Not Used
Int.10 Sets = Not Used
Int.10 Set by = Not Used
Int.11 Sets = Not Used
Int.11 Set by = Not Used
Int.12 Sets = Not Used
Int.12 Set by = Not Used

ADVANCED: Internal I/O 4
Int.13 Sets = Not Used
Int.13 Set by = Not Used
Int.14 Sets = Not Used
Int.14 Set by = Not Used
Int.15 Sets = Not Used
Int.15 Set by = Not Used
Int.16 Sets = Not Used
Int.16 Set by = Not Used

ADVANCED: site options
Daylight Savings = On
Units = Standard
Maint Call Rpt IP Used = No
Emergency Activate IP = No
EZ/EX Logging = Change
EZ/EX Point Change = 3

OUTPUT: assignment page 1
OUT 1.1 = AND 1 XR
OUT 1.2 = Not Used
OUT 2.1 = Not Used
OUT 2.2 = Not Used

INPUT: assignment page 1
IN 1.1 = Out Of Service IP 1
IN 1.2 = Not Used
IN 2.1 = Out Of Service IP 2
IN 2.2 = Not Used

SITE: programming
Radio Subnode = 1
Field Password = Off
Low Battery Enabled = Off

Configuration Package File

Filename: CONFIG-000000A-2015Sep14.pac
Path: C:µUsersµ116351µDocumentsµ
Date/Time: 9/14/2015 10:46:57
DT Version: 5.0.7

NOTES

1) DISTANCE(S) TO BE VERIFIED AT INSTALLATION
   INDICATE SELECTED PROGRAMMED VALUE IF DIFFERENT THAN SHOWN
   REFER TO 4000 GCP INSTRUCTION/INSTALLATION MANUAL
   FOR PROGRAMMING PARAMETERS

2) PROGRAM TEXT HIGHLITED IN RED INDICATES 4000 PROGRAM
   MODIFICATIONS TO DEFAULT PROGRAM VALUES

3) EACH CONSTANT WARNING DEVICE SYSTEM TO BE PROGRAMMED TO
   CONVERT TO A MOTION SENSOR 300 FEET FROM EDGE OF ROAD
   TRAVELLED WAY
   SHUNT TRACK 300 FEET FROM EDGE OF ROAD TRAVELLED WAY
   AND NOTE "EZ" VALUE
   PROGRAM EACH SYSTEM WITH THE INDICATED "EZ" VALUE +2

4) VERIFY SET TIMER VALUE TO MATCH ACTUAL TRAIN MOVEMENT
   WITHIN THE CROSSING APPROACH CIRCUITS

OBSOLETE
08/09/15
DESIGN# 15-0099
BEH

PROPOSED			REVISIONS	D	C	COMPLETED			C
D	M	Y				D	M	Y	
			AS INSTALLED			01	03	12	KJA

REGION SOUTHERN
SUB. FREEPORT 382

SIGNALS AND COMMUNICATIONS HOMEWOOD
DES. PAC
21 NOVEMBER 2011
CH. TPF

GCP 4000
PROGRAM INFORMATION
ROCKFORD, IL
ROCKFORD CP WEST
FRE-086.71-23X

SIEMENS INDUSTRY INC			
DES. : BEH	DATE: 08/09/15	JOB NO.: PICA10597	
CKD. : MRB	ISSUE DATE: N/A	EST. NO.: XP-7959	
DRN. : BEH	PLAN NO.: N/A	SHEET 23 OF 27	
P. TIME: 14:55	P. DATE: 14-OCT-2015	CAD ID.: FRE-086.71-23X	

SIEMENS INDUSTRY INC
LOUISVILLE DIVISION, LOUISVILLE, KY

fre-086.71-23x.dgn
14-OCT-2015

GCP4000 SINGLE TRACK, BIDIRECTIONAL TYPICAL

REVISIONS			
NO.	DATE	BY	DESCRIPTION	APP. BY
1				
2				
3				
4				
5				

GCP 4000
CALIBRATION HISTORY

INITIAL SET UP BY: _____ DATE: _____

		APPROACH DISTANCE CALIBRATION										LINEARIZATION CALIBRATION	
		EZ/EX VALUES (TRACK UNOCCUPIED)				HARD WIRE SHUNT AT TERMINATION SHUNT				COMPUTED APPROACH DISTANCE		LINEARIZATION STEP VALUE	
		EZ		EX		EZ		EX					
		NRML	STBY	NRML	STBY	NRML	STBY	NRML	STBY	NRML	STBY	NRML	STBY
WEST	TRACK 1												
EAST	TRACK 1	N/A	N/A	N/A	N/A	N/A	N/A	N/A	N/A	N/A	N/A	N/A	N/A
WEST	TRACK 1												
EAST	TRACK 1	N/A	N/A	N/A	N/A	N/A	N/A	N/A	N/A	N/A	N/A	N/A	N/A

GCP 4000
CALIBRATION HISTORY

INITIAL SET UP BY: _____ DATE: _____

		APPROACH DISTANCE CALIBRATION										LINEARIZATION CALIBRATION	
		EZ/EX VALUES (TRACK UNOCCUPIED)				HARD WIRE SHUNT AT TERMINATION SHUNT				COMPUTED APPROACH DISTANCE		LINEARIZATION STEP VALUE	
		EZ		EX		EZ		EX					
		NRML	STBY	NRML	STBY	NRML	STBY	NRML	STBY	NRML	STBY	NRML	STBY
WEST	TRACK 1												
EAST	TRACK 1	N/A	N/A	N/A	N/A	N/A	N/A	N/A	N/A	N/A	N/A	N/A	N/A
WEST	TRACK 1												
EAST	TRACK 1	N/A	N/A	N/A	N/A	N/A	N/A	N/A	N/A	N/A	N/A	N/A	N/A

GCP 4000
CALIBRATION HISTORY

INITIAL SET UP BY: _____ DATE: _____

		APPROACH DISTANCE CALIBRATION										LINEARIZATION CALIBRATION	
		EZ/EX VALUES (TRACK UNOCCUPIED)				HARD WIRE SHUNT AT TERMINATION SHUNT				COMPUTED APPROACH DISTANCE		LINEARIZATION STEP VALUE	
		EZ		EX		EZ		EX					
		NRML	STBY	NRML	STBY	NRML	STBY	NRML	STBY	NRML	STBY	NRML	STBY
WEST	TRACK 1												
EAST	TRACK 1	N/A	N/A	N/A	N/A	N/A	N/A	N/A	N/A	N/A	N/A	N/A	N/A
WEST	TRACK 1												
EAST	TRACK 1	N/A	N/A	N/A	N/A	N/A	N/A	N/A	N/A	N/A	N/A	N/A	N/A

SIEMENS INDUSTRY INC			
DES.: BEH	DATE: 08/09/15	JOB NO.: PICA10597	
CKD.: MRB	ISSUE DATE: N/A	EST. NO.: XP-7959	
DRN.: BEH	PLAN NO.: N/A	SHEET 24 OF 27	
P TIME: 14:56	P DATE: 14-OCT-2015	CAD ID.: FRE-086.71-24	

PROPOSED D	M	Y	REVISIONS	D	C	COMPLETED D	M	Y	C
			AS INSTALLED			01	03	12	KJA

REGION SOUTHERN
SUB. FREEPORT 382

SIGNALS AND COMMUNICATIONS HOMEWOOD
21 NOVEMBER 2011
DES. PAC
CH. TPF

GCP 4000
CALIBRATION HISTORY
ROCKFORD, IL
ROCKFORD CP WEST

FRE-086.71-24

SIEMENS INDUSTRY INC
LOUISVILLE DIVISION, LOUISVILLE, KY

fre-086.71-24.dgn
14-OCT-2015

GCP4000 SINGLE TRACK, BIDIRECTIONAL TYPICAL

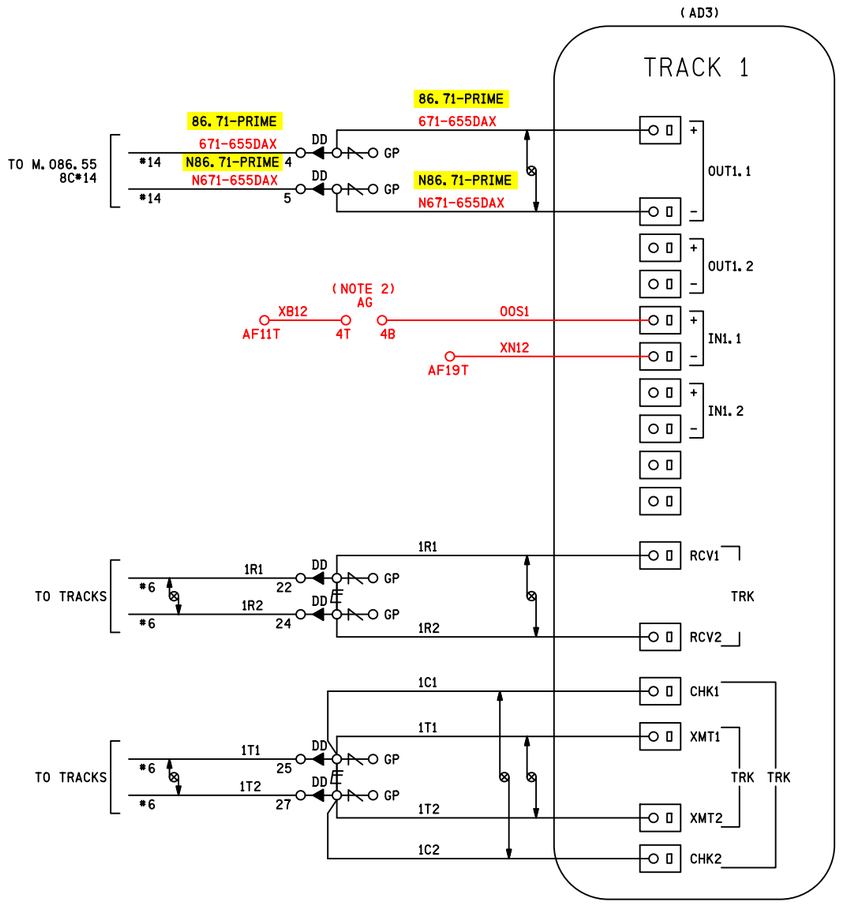

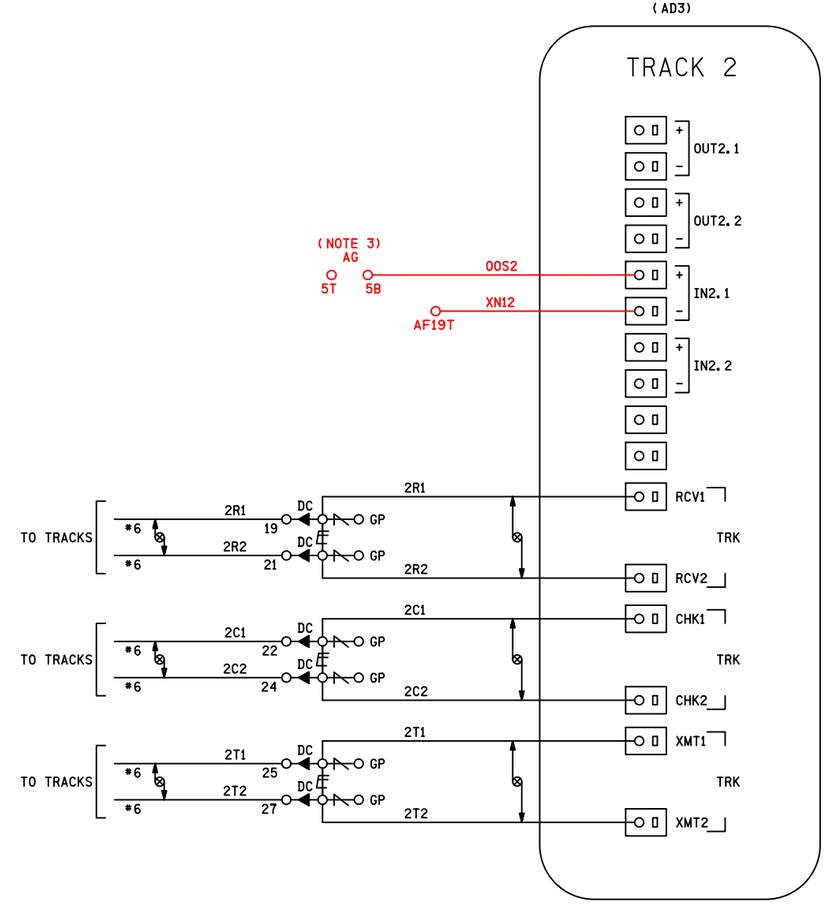

NOTES

1) ALL WIRING *10 AWG UNLESS OTHERWISE NOTED
2) TO TAKE TRACK 1 (T1) OUT OF SERVICE, JUMPER AG4T TO AG4B
3) TO TAKE TRACK 2 (T2) OUT OF SERVICE, JUMPER AG5T TO AG5B

DENOTES TWISTED PAIR

SII 08 SEP 2015

PROPOSED
DESIGN NO. 15-0099
RED-IN YELLOW-OUT

AS INSTALLED
DATE _____
BY _____
(PRINT NAME)

PROPOSED D	PROPOSED M	PROPOSED Y	REVISIONS	D	C	COMPLETED D	COMPLETED M	COMPLETED Y	C
			AS INSTALLED			01	03	12	KJA
08	09	15	M.086.55 UPGRADE	BEH	MRB				

REGION SOUTHERN
SUB. FREEPORT 382

SIGNALS AND COMMUNICATIONS HOMEWOOD
21 NOVEMBER 2011
DES. PAC
CH. TPF

GCP 4000
TRACK MODULE CONNECTIONS
ROCKFORD, IL
ROCKFORD CP WEST

FRE-086.71-25

GCP4000 SINGLE TRACK, BIDIRECTIONAL TYPICAL

fre-086.71-25.dgn
14-OCT-2015

REVISIONS

NO.	DATE	BY	DESCRIPTION	APP. BY
1				
2				
3				
4				
5				

SIEMENS INDUSTRY INC

DES.: BEH	DATE: 08/09/15	JOB NO.: PICA10597	
CKD.: MRB	ISSUE DATE: N/A	EST. NO.: XP-7959	
DRN.: BEH	PLAN NO.: N/A	SHEET 25 OF 27	
P. TIME: 14:56	P. DATE: 14-OCT-2015	CAD ID.: FRE-086.71-25	

SIEMENS INDUSTRY INC
LOUISVILLE DIVISION, LOUISVILLE, KY

REVISIONS				
NO.	DATE	BY	DESCRIPTION	APP. BY
1				
2				
3				
4				
5				

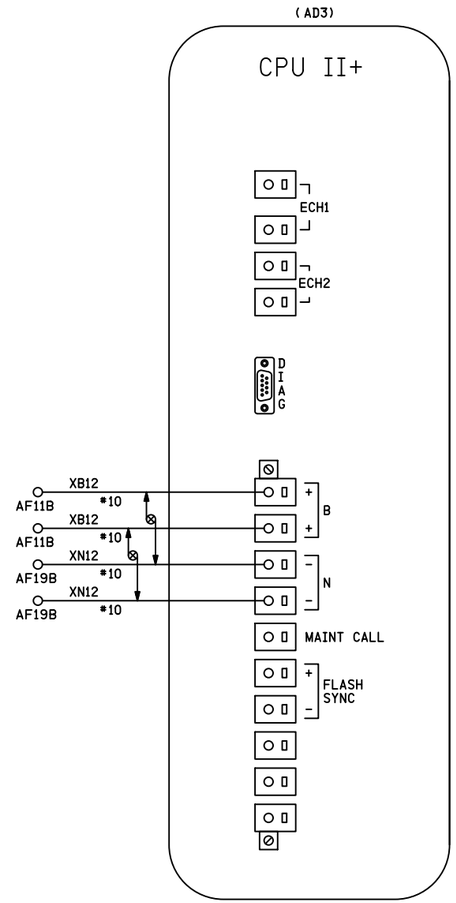

NOTES

1) ALL WIRING #16 AWG UNLESS OTHERWISE NOTED

DENOTES TWISTED PAIR

PROPOSED			REVISIONS	D	C	COMPLETED			C
D	M	Y				D	M	Y	
			AS INSTALLED			01	03	12	KJA

REGION SOUTHERN

SUB. FREEPORT 382

SIGNALS AND COMMUNICATIONS HOMEWOOD

21 NOVEMBER 2011

DES. PAC

CH. TPF

GCP 4000 CPUII+

ROCKFORD, IL

ROCKFORD CP WEST

FRE-086.71-26

GCP4000 SINGLE TRACK, BIDIRECTIONAL TYPICAL

fre-086.71-26.dgn
14-OCT-2015

SIEMENS INDUSTRY INC		
DES.: BEH	DATE: 08/09/15	JOB NO.: PICA10597
CKD.: MRB	ISSUE DATE: N/A	EST. NO.: XP-7959
DRN.: BEH	PLAN NO.: N/A	SHEET 26 OF 27
P TIME: 14:56	P DATE: 14-OCT-2015	CAD ID.: FRE-086.71-26

SIEMENS INDUSTRY INC
LOUISVILLE DIVISION, LOUISVILLE, KY

MATERIAL LIST

LINE	ITEM	SUPPLIER	PART NUMBER	QTY
01	HOUSING 8′ X 8′	SAFETRAN	058520-88-x5	1
02	RACK - SWING OUT	CIMTECH	057883-1X	1
03	SWITCH - TEMP CONTROL	NEWARK	153518-72	1
04	DOOR ALARM CONTACT	MCALISTER	132145-T03524	2
05	DOOR ALARM BRACKET	MCMASTER	052619-34	2
06	GROUND BOLT	SAFETRAN	023590-2X	3
07	PANDUIT 3" X 3"	PANDUIT	098152-T00305	120"
08	PANDUIT COVER	PANDUIT	098152-T00251	120"
09				
10				
11	ELECTROLOGIXS 9 SLOT CHASSIS	GETS	300752-000	1
12	XCI-2 (CHASSIS INFORMATION MODULE)	GETS	251442-000	1
13	VPM-3 MODULE	GETS	251432-100	1
14	CIO-1A MODULE	GETS	251329-000	1
15	CIO-2A MODULE	GETS	251330-000	1
16	CDU-1 MODULE	GETS	251124-000	1
17	GFD MODULE	GETS	251333-000	1
18	CPS-3 POWER SUPPLY	GETS	251456-000	1
19	VTI-2S TRACK MODULE	GETS	251123-000	2
20	VTI-2S TRACK PERSONALITY MODULE	GETS	227442-000	2
21	VLD-R16S MODULE	GETS	251381-000	2
22	VLD-R16S PERSONALITY MODULE	GETS	227539-000	2
23	VIO-86S MODULE	GETS	251380-000	2
24	VIO-86S PERSONALITY MODULE	GETS	227537-000	2
25	TIP-2 TRACK PANEL	GETS	800-096000-011	2
26	TIP-2 CABLE	GETS	814-096000-017	2
27	LCP, CUSTOM EEOS-RHS	GETS	300712-214	1
28	LCP CURRENT LOOP ADAPTER	GETS	203051-000	1
29				
30	RELAY - ST BIASED NEUTRAL (SWITCH CONTROL)	SAFETRAN	400520	2
31	RELAY - ST BIASED NEUTRAL (VSTOP)	SAFETRAN	400023	3
32	RELAY - BIASED NEUTRAL (TRACK)	SAFETRAN	400510	4
33	RELAY PLUGOARD	SAFETRAN	420000-75X	9
34	RELAY - NONVITAL 240VAC (POR)	POTTER BRUMFIELD	KUP-14A15-240	1
35	RELAY - NONVITAL 12VDC (SMS)	POTTER BRUMFIELD	KUP-14D15-12	1
36	RELAY - NONVITAL 24VAC (SMK)	POTTER BRUMFIELD	KUP-14A15-24	1
37	NONVITAL RELAY SOCKET	POTTER BRUMFIELD	053222-T09797	3
38	NONVITAL RELAY HOLD DOWN CLIP	POTTER BRUMFIELD	053222-T09795	3
39				
40	CONTACT FLAG RELAY	TYCO	097000-T00286	70
41	CONTACT TYCO FLAG RELAY	TYCO	097000-T00287	70
42	CHARGER 24/30 (24VDC)	NRS	150319-70	1
43	CHARGER 12/40 (12VDC)	NRS	T15030	1
44				
45	BATTERY SPL250 (OPERATING BANK)	SAFT	SPL250	11
46	BATTERY PC1200 (SWITCH BANK)	ODYSSEY	PC1200	3
47	BATTERY LUG ASS'Y KIT	ALCAD	171486-1	2
48				
49	DC-DC CONVERTER (OS TRACK FEED)	GETS	800-003502-000	1
50	DC-AC CONVERTER (TSAT, TS1AT TRACK FEED)	GETS	800-081033-100	1
51	RING 10 RECTIFIER	GETS	800-004080-000	1
52	RESISTOR 4 OHM ADJUST (OS/TSAT TRACK FEED)	SAFETRAN	029603-12X	3
53	RESISTOR 17 OHM ADJUST (OS/TSAT TRK RELAY)	SAFETRAN	029603-25X	4
54	RESISTOR FIXED 50 OHM (NWP)	SAFETRAN		1
55				
56				
57				
58				
59	FUSE 20 AMP	GRAYBAR	310152-T02171	2
60	FUSE BLOCK	SAFETRAN	027614-1X	2
61				
62				
63	SURGE PROTECTOR 12VDC EPD1224ATAAR	ERICO	T17682	1
64	SURGE PROTECTOR SP 24-2A (RADIO PROTECTION)	SAFETRAN	4000-44811-05AX	1
65				
66	WCP GROUP	SAFETRAN	9031-53411-310A	1
67				
68				
69				
70				
71				
72	ARRESTOR HD	SAFETRAN	4000-44585-001X	16
73	ARRESTOR LV CLEARVIEW	SAFETRAN	4000-44485-028X	67
74	EQUALIZER	SAFETRAN	4000-44700-001X	10
75				
76	TERMINAL BLOCK 12 WAY	SAFETRAN	023274-501X	3
77	TERMINAL BLOCK SINGLE	SAFETRAN	023390-5X	27
78	TERMINAL BLOCK 2⅜	SAFETRAN	023612-1X	53
79				
80	TEST LINK 1"	SAFETRAN	024620-1X	124
81	TEST LINK 2⅜"	SAFETRAN	024620-4X	8
82				
83	WAGO TERMINAL BLOCK	WAGO	409893-T09274	50
84	WAGO SEPARATOR	WAGO	093360-T10646	3
85	WAGO JUMPER	WAGO	T14055	45
86	WAGO END PLATE	WAGO	409893-T09272	1
87	WAGO DIN RAIL	WAGO	T14786	1
88	WAGO MARKERS	WAGO	409893-T09269	1
89	WAGO END STOP	WAGO	T14049	2
90				
91	BOX 4" SQ 2.25" DEEP	GRAYBAR	007212	2
92	COVER 4" SQ	RAYCO	007228	2
93				
94	BOX HOFFMAN ASE8X8X4	HOFFMAN	T18464	1
95	COVER HOFFMAN LEXAN 8X8X4	HOFFMAN	T18464-1	1
96				
97	PIF NI 1/2X2	KCI SUPPLY	005462-MG	2
98	CONNECTOR LN ½"	REGAL	007151	6
99	CONNECTOR BUSHING ½"	T & B	007183	4
100	CONNECTOR ⅜"	GRAYBAR	007335-1	4
101	CONDUIT CLAMP ⅜"	ARLINGTON	007300-1	8
102				
103	WIRE 12-2C SOLID - AC WIRE	ANIXTER	T18085	
104	WIRE #10 T.C. BLUE	OKONITE	099056-T01379	
105	WIRE #16 T.C. BLUE	OKONITE	099056-T01538	
106				
107				
108	TERMINAL PIDG YELLOW	AMP	091769-T10712	200
109	TERMINAL #16 BLUE	TYCO	T17556	200
110	TERMINAL HD SOLISTAN	AMP	091769-T10707	8
111	TERMINAL RING TONG	GRAYBAR	097000-T00206	30
112	TERMINAL SPADE RECEPTACLE	AMP	040296	2
113				
114				
115	INSULATED NUT	SAFETRAN	023408-1X	20
116				
117				
118				
119	CABLE SERIAL DB9F TO DB2	CDW	023408-1X	1
120				
121				
122				
123				

REVISIONS			
NO.	DATE	BY	DESCRIPTION	APP. BY
1				
2				
3				
4				
5				

SIEMENS INDUSTRY INC			
DES.: BEH	DATE: 08/09/15	JOB NO.: PICA10597	
CKD.: MRB	ISSUE DATE: N/A	EST. NO.: XP-7959	
DRN.: BEH	PLAN NO.: N/A	SHEET 27 OF 27	
P TIME: 14:56	P DATE: 14-OCT-2015	CAD ID.: FRE-086.71-27	

PROPOSED D	PROPOSED M	PROPOSED Y	REVISIONS	D	C	COMPLETED D	COMPLETED M	COMPLETED Y	C
			AS INSTALLED			01	03	12	KJA

REGION SOUTHERN
SUB. FREEPORT 382

SIGNALS AND COMMUNICATIONS HOMEWOOD
25 AUGUST 2011
DES. KJA
CH. GGS

MATERIAL

ROCKFORD CP WEST

FRE-086.71-27

fre-086.71-27.dgn
14-OCT-2015

SIEMENS INDUSTRY INC
LOUISVILLE DIVISION, LOUISVILLE, KY