REVISIONS				
NO.	DATE	BY	DESCRIPTION	APP. BY
1				
2				
3				
4				
5				

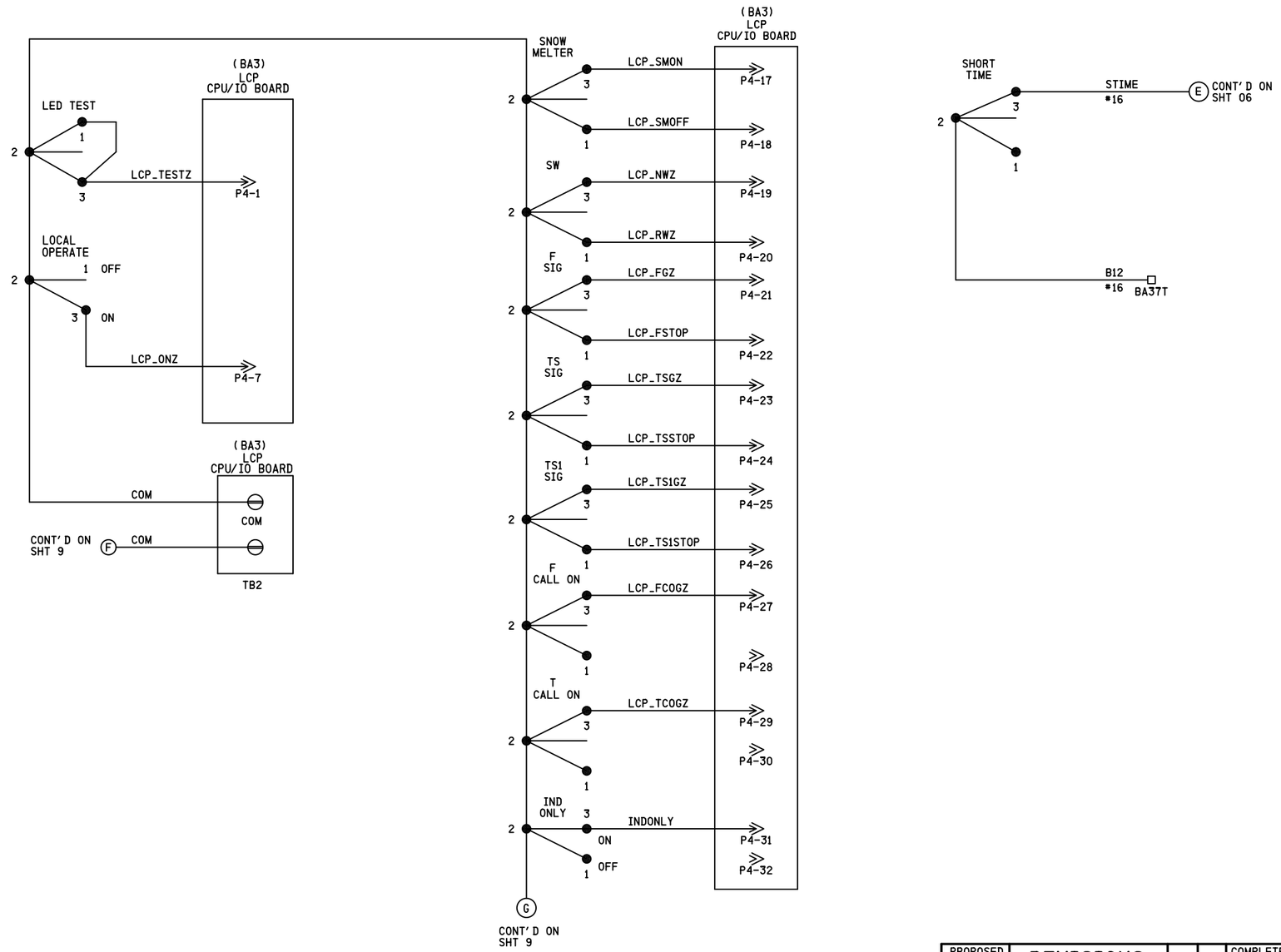

NOTE

1) CIRCUITS TO BE #22 AWG UNLESS OTHERWISE NOTED

SIEMENS INDUSTRY INC			
DES. : BEH	DATE: 08/09/15	JOB NO.: PICA10597	
CKD. : MRB	ISSUE DATE: N/A	EST. NO.: XP-7959	
DRN. : BEH	PLAN NO.: N/A	SHEET 8 OF 27	
P. TIME: 14:53	P. DATE: 14-OCT-2015	CAD ID.: FRE-086.71-08	

PROPOSED			REVISIONS	D	C	COMPLETED			C
D	M	Y				D	M	Y	
			AS INSTALLED			01	03	12	KJA

REGION SOUTHERN

SUB. FREEPORT 382

SIGNALS AND COMMUNICATIONS HOMEWOOD

DES. KJA

25 AUGUST 2011

CH. GGS

LCP CONTROL CIRCUITS

ROCKFORD CP WEST

FRE-086.71-08

fre-086.71-08.dgn
14-OCT-2015

SIEMENS INDUSTRY INC
LOUISVILLE DIVISION, LOUISVILLE, KY

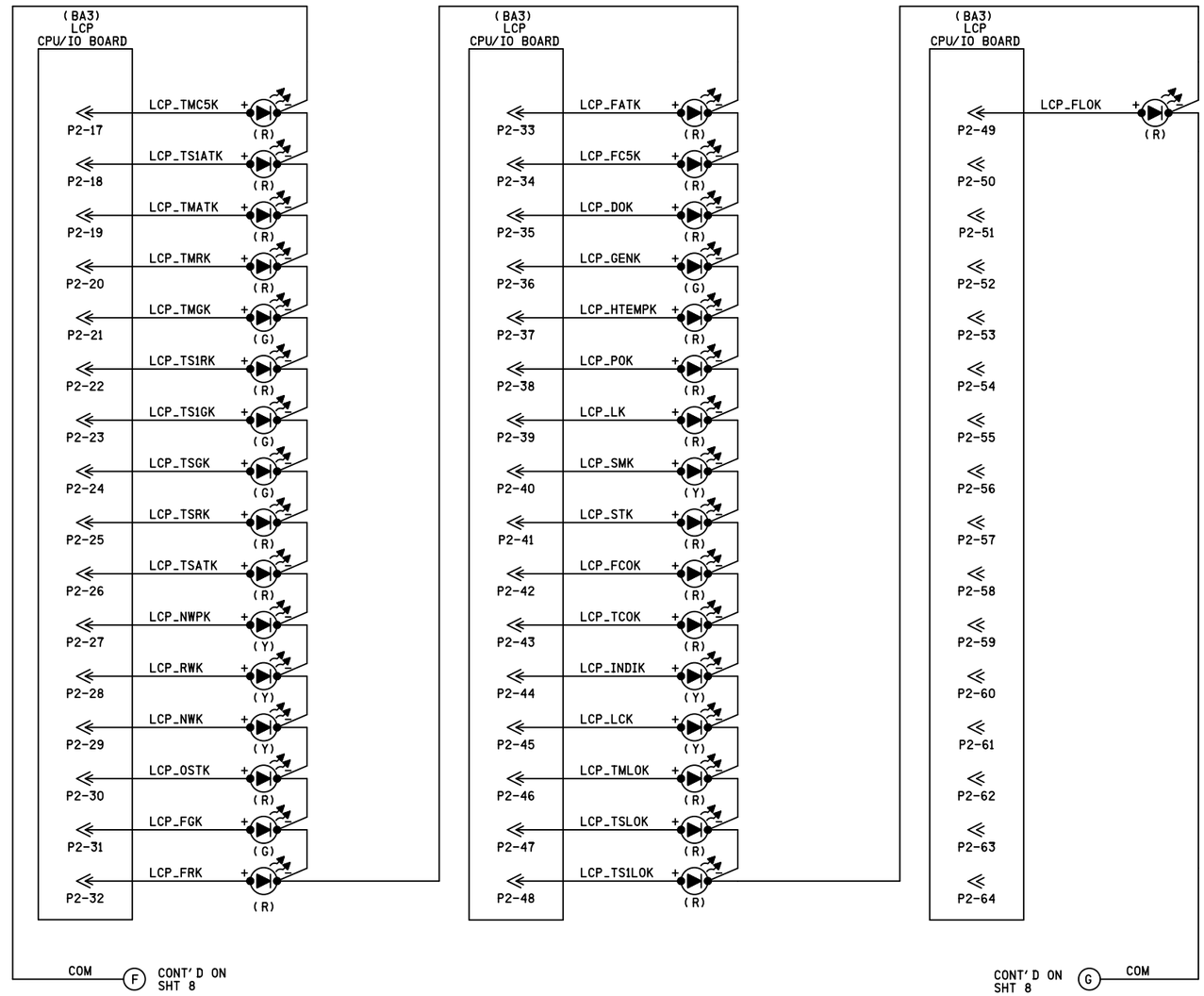

NOTE

1) CIRCUITS TO BE #22 AWG UNLESS OTHERWISE NOTED

REVISIONS				
NO.	DATE	BY	DESCRIPTION	APP. BY
1				
2				
3				
4				
5				

SIEMENS INDUSTRY INC			
DES. : BEH	DATE: 08/09/15	JOB NO.: PICA10597	
CKD. : MRB	ISSUE DATE: N/A	EST. NO.: XP-7959	
DRN. : BEH	PLAN NO.: N/A	SHEET 9 OF 27	
P TIME: 14:53	P DATE: 14-OCT-2015	CAD ID.: FRE-086.71-09	

PROPOSED			REVISIONS	D	C	COMPLETED			C
D	M	Y				D	M	Y	
			AS INSTALLED			01	03	12	KJA

REGION SOUTHERN

SUB. FREEPORT 382

SIGNALS AND COMMUNICATIONS HOMEWOOD

25 AUGUST 2011

DES. KJA

CH. GGS

LCP INDICATION CIRCUITS

ROCKFORD CP WEST

FRE-086.71-09

fre-086.71-09.dgn
14-OCT-2015

SIEMENS INDUSTRY INC
LOUISVILLE DIVISION, LOUISVILLE, KY

REVISIONS				
NO.	DATE	BY	DESCRIPTION	APP. BY
1				
2				
3				
4				
5				

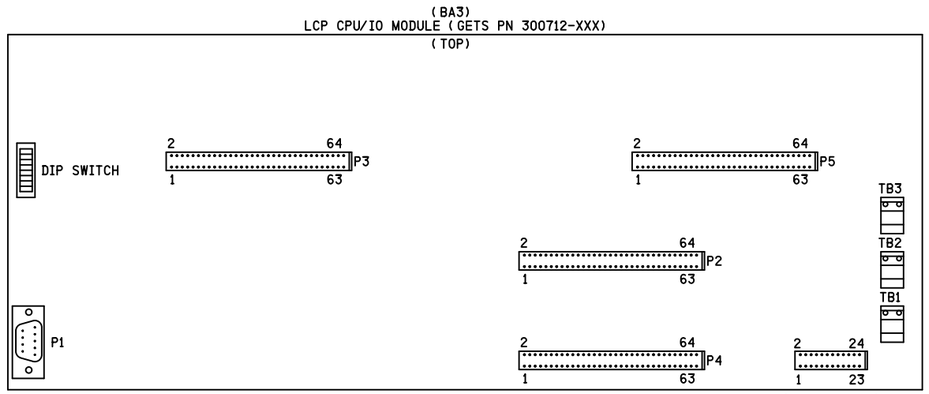

LCP EPROM (U3)

VER. 1.30
CKSUM=8B3C

LCP
WIRE HARNESS
BETWEEN POWER
SUPPLY AND
CPU/IO BOARD
(GETS PN 227258-000)

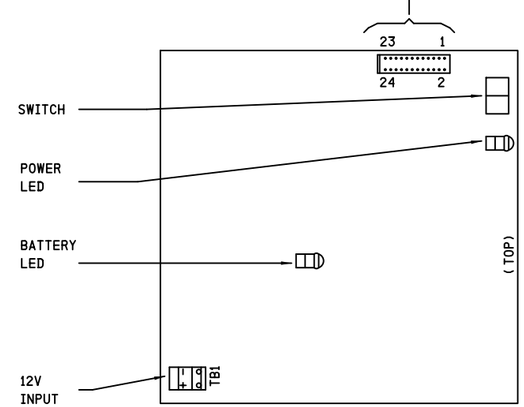

LCP POWER SUPPLY
(GETS PN 226609-200)

INDICATION
DPDT SWITCH

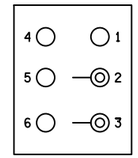

(REAR VIEW)
HPN (9060-001)

DIP SWITCH LOCATED ON CPU/IO MODULE

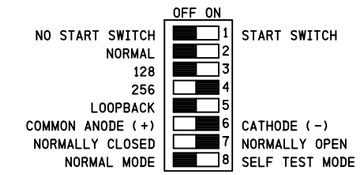

ILLUMINATED PUSHBUTTON

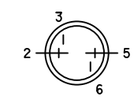

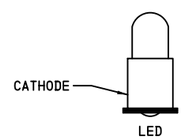

(REAR VIEW)

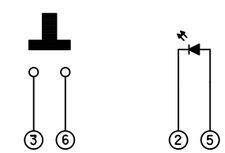

SWITCH BASE PINOUT

LED AND WIRING PLUG

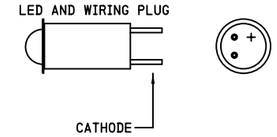

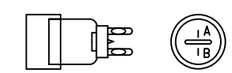

MISC. LCP PART NUMBERS

DESCRIPTION	HPN
LED RED T1-3/4 2V .29" CRTG	011173-020
LED AMB T1-3/4 2V .29" CRTG	011173-030
LED GRN T1-3/4 2V .29" CRTG	011173-050
SWITCH TOG 2 POS DPDT 20A PNLMT	009060-003
SWITCH TOG MOM DPDT 18A PNLMT	009060-001
SWITCH KEY DPDT 3 POS PNL	009129-003

PROPOSED			REVISIONS	D	C	COMPLETED			C
D	M	Y				D	M	Y	
			AS INSTALLED			01	03	12	KJA

REGION SOUTHERN
SUB. FREEPORT 382

SIGNALS AND COMMUNICATIONS HOMEWOOD
25 AUGUST 2011
DES. KJA
CH. GGS

LCP EQUIPMENT DETAIL

ROCKFORD CP WEST

FRE-086.71-10

fre-086.71-10.dgn
14-OCT-2015

SIEMENS INDUSTRY INC

DES.: BEH	DATE: 08/09/15	JOB NO.: PICA10597	
CKD.: MRB	ISSUE DATE: N/A	EST. NO.: XP-7959	
DRN.: BEH	PLAN NO.: N/A	SHEET 10 OF 27	
P TIME: 14:53	P DATE: 14-OCT-2015	CAD ID.: FRE-086.71-10	

SIEMENS INDUSTRY INC
LOUISVILLE DIVISION, LOUISVILLE, KY

REVISIONS				
NO.	DATE	BY	DESCRIPTION	APP. BY
1				
2				
3				
4				
5				

B N

(BA3)

SLOT 1	SLOT 2	SLOT 3	SLOT 4	SLOT 5	SLOT 6	SLOT 7	SLOT 8	SLOT 9
VIO-86S	VIO-86S	VLD-R16S	VTI-2S	VTI-2S	VLD-R16S	EMPTY	EMPTY	EMPTY
VITAL IN 1	VITAL IN 1	BANK 1	TRACK 1 OUT	TRACK 1 OUT	BANK 1			
VITAL IN 2	VITAL IN 2	VSSR 1	TRACK 1 IN	TRACK 1 IN	VSSR 1			
VITAL IN 3	VITAL IN 3	LAMP 1			LAMP 1			
VITAL IN 4	VITAL IN 4	LAMP 2	TRACK 2 OUT	TRACK 2 OUT	LAMP 2			
VITAL IN 5	VITAL IN 5	LAMP 2	TRACK 2 IN	TRACK 2 IN	LAMP 2			
VITAL IN 6	VITAL IN 6	LAMP 4			LAMP 4			
VITAL IN 7	VITAL IN 7	LAMP 5	CAB 1 OUT	CAB 1 OUT	LAMP 5			
VITAL IN 8	VITAL IN 8	LAMP 6	CAB 2 OUT	CAB 2 OUT	LAMP 6			
BANK 1	BANK 1	LAMP 7			LAMP 7			
VITAL OUT 1	VITAL OUT 1	LAMP 8	VITAL IN 1	VITAL IN 1	LAMP 8			
VITAL OUT 2	VITAL OUT 2	BANK 2	VITAL IN 2	VITAL IN 2	BANK 2			
VITAL OUT 3	VITAL OUT 3	VSSR 2			VSSR 2			
BANK 2	BANK 2	LAMP 9			LAMP 9			
VITAL OUT 4	VITAL OUT 4	LAMP 10			LAMP 10			
VITAL OUT 5	VITAL OUT 5	LAMP 11			LAMP 11			
VITAL OUT 6	VITAL OUT 6	LAMP 12			LAMP 12			
		LAMP 13			LAMP 13			
		LAMP 14			LAMP 14			
		LAMP 15			LAMP 15			
		LAMP 16			LAMP 16			
BANK 1 HEALTH	BANK 1 HEALTH	BANK 1 HEALTH			BANK 1 HEALTH			
BANK 2 HEALTH	BANK 2 HEALTH	BANK 2 HEALTH			BANK 2 HEALTH			
HEALTH	HEALTH	HEALTH	HEALTH	HEALTH	HEALTH			

CPS-3

BACK PLANE

CONTROL DISPLAY UNIT WILL MOUNT IN FRONT OF THE CPS-3 & VPM-3

VPM-3

CPU STATUS

A B C

PROG

ENET 1

ENET 2

CDU

USB

SLOT 1

GFD-1

B1+ B1-

B2+ B2-

B3+ B3-

1 B2
2 B2
3 —
4 B3
5 B3
6 —
7 GND

SLOT 2

CIO-1A

DIAGNOSTIC

TX RX

TX RX

OFFICE

SLOT 3

CIO-2A

TX RX

RTS CTS

DTR DSR

TXC RXC

ETC CD

DB25

RS232

CHASSIS ID DIP PACK

XCI-2

NOTES

CDU-1 = CONTROL DISPLAY UNIT
CPS-3 = CENTRAL POWER SUPPLY
VPM-3 = VITAL PERIPHERAL MASTER MODULE
GFD-1 = GROUND FAULT DETECTOR MODULE
CIO-2A = COMMUNICATION INPUT/OUTPUT MODULE
CIO-1A = COMMUNICATION INPUT/OUTPUT MODULE
XCI-2 = CHASSIS INFORMATION MODULE
VTI-2S = VITAL TRACK INTERFACE
VLD-R16S = VITAL LAMP DRIVER MODULE
VIO-86S = VITAL 8 IN / 6 OUT

ELECTROLOGIXS COMMUNICATION NOTES:

SERIAL PORT 1 (VPM-2+ & VPM-3)
- -GENISYS
- -SCS-128
- -LCP (MUST USE EXTERNAL CURRENT LOOP ADAPTER P/N 203051-000 FOR GENERIC/CUSTOM LCP UNITS OR CIO-2A TO SOFTWARE PANEL)
- -UCE

SERIAL PORT 2 & 3 (VPM-2+ & VPM-3)
- -ATCS (MUST USE CIO-MDA TO RADIO)
- -LCP (MUST USE EXTERNAL CURRENT LOOP ADAPTER P/N 203051-000 FOR GENERIC/CUSTOM LCP UNITS OR CIO-2A TO SOFTWARE PANEL)
- -HAWK
- -REMOTE (RP2000)

ETHERNET (IP-BASED PROTOCOLS VPM-3 ONLY)
GENISYS
REMOTE (RP2000)

PROPOSED D	PROPOSED M	PROPOSED Y	REVISIONS	D	C	COMPLETED D	COMPLETED M	COMPLETED Y	C
			AS INSTALLED			01	03	12	KJA

REGION SOUTHERN

SUB. FREEPORT 382

SIGNALS AND COMMUNICATIONS HOMEWOOD

25 AUGUST 2011

DES. KJA

CH. GGS

IXS VLC HARDWARE CONFIGURATION

ROCKFORD CP WEST

FRE-086.71-11

fre-086.71-11.dgn
14-OCT-2015

SIEMENS INDUSTRY INC

DES.: BEH	DATE: 08/09/15	JOB NO.: PICA10597	
CKD.: MRB	ISSUE DATE: N/A	EST. NO.: XP-7959	
DRN.: BEH	PLAN NO.: N/A	SHEET 11 OF 27	
P TIME: 14:53	P DATE: 14-OCT-2015	CAD ID.: FRE-086.71-11	

SIEMENS INDUSTRY INC
LOUISVILLE DIVISION, LOUISVILLE, KY

REVISIONS				
NO.	DATE	BY	DESCRIPTION	APP. BY
1				
2				
3				
4				
5				

fre-086.71-12.dgn
14-OCT-2015

VIO-86S PERSONALITY MODULE (SLOT 1)

AUX

IN 1+	NWC	1
IN 1-	NNWC	2
IN 2+	RWC	5
IN 2-	NRWC	6
IN 3+	OST	9
IN 3-	NOST	10
IN 4+	STIME	13
IN 4-	NSTIME	14
IN 5+	WJK	17
IN 5-	NWJK	18

J3

AUX

IN 6+	FCN	1
IN 6-	NFCN	2
IN 7+	FCR	5
IN 7-	NFCR	6
IN 8+		9
IN 8-		10
OUT 6+	FLR	17
OUT 6-	NFLR	18

J4

AUX

OUT 1+	NW	1
OUT 1-	NNW	2
OUT 2+	RW	5
OUT 2-	NRW	6
OUT 3+		9
OUT 3-		10
OUT 4+		13
OUT 4-		14
OUT 5+		17
OUT 5-		18

J5

VIO-86S PERSONALITY MODULE (SLOT 2)

AUX

IN 1+	SMK	1
IN 1-	NSMK	2
IN 2+	POR	5
IN 2-	NPOR	6
IN 3+	HITEMP	9
IN 3-	NHITEMP	10
IN 4+	GEN	13
IN 4-	NGEN	14
IN 5+	DOR	17
IN 5-	NDOR	18

J3

AUX

IN 6+	FLREQ	1
IN 6-	NFLREQ	2
IN 7+	TMLREQ	5
IN 7-	NTMLREQ	6
IN 8+	TSLREQ	9
IN 8-	NTSLREQ	10
OUT 6+	TSLR	17
OUT 6-	NTSLR	18

J4

AUX

OUT 1+		1
OUT 1-		2
OUT 2+		5
OUT 2-		6
OUT 3+		9
OUT 3-		10
OUT 4+	SMZ	13
OUT 4-	NSMZ	14
OUT 5+	TMLR	17
OUT 5-	NTMLR	18

J5

VLD-R16S PERSONALITY MODULE (SLOT 3)

LAMP1	FAGE	1
LAMP2	FAYE	2
LAMP3	FARE	3
LAMP4	FBGE	4
LAMP5	FBYE	5
LAMP6	FBRE	6
LAMP7	TMBRE	7
LAMP8	TSBRE	8
N/A		9
LAMPB1	LAMP +	10
LAMPB1	LAMP +	11
LAMPN1	LAMP -	12
N/A		13
VSSR1+	VSTOP	14
VSSR1-	NVSTOP	15

J3

LAMP9	TMAGE	1
LAMP10	TMAYE	2
LAMP11	TMARE	3
LAMP12	TMBGE	4
LAMP13	TSAGE	5
LAMP14	TSAYE	6
LAMP15	TSARE	7
LAMP16	TSBGE	8
N/A		9
LAMPB2	LAMP +	10
LAMPB2	LAMP +	11
LAMPN2	LAMP -	12
N/A		13
VSSR2+	VSTOP2	14
VSSR2-	NVSTOP2	15

J4

VTI-2S PERSONALITY MODULE (SLOT 4)

TK 1+	FTB	1
TK 1-	FTN	2
		3
TK 2+		4
TK 2-		5

J3

CAB1+		1
CAB1-		2
		3
CAB2+		4
CAB2-		5
		6
IN 1+	8675NWP	7
IN 1-	N8675NWP	8
		9
IN 2+	8675RWP	10
IN 2-	N8675RWP	11

J4

VTI-2S PERSONALITY MODULE (SLOT 5)

TK 1+	TMTB	1
TK 1-	TMTN	2
		3
TK 2+		4
TK 2-		5

J3

CAB1+		1
CAB1-		2
		3
CAB2+		4
CAB2-		5
		6
IN 1+	TS1AT	7
IN 1-	NTS1AT	8
		9
IN 2+	TSAT	10
IN 2-	NTSAT	11

J4

VLD-R16S PERSONALITY MODULE (SLOT 6)

LAMP1	TS1AGE	1
LAMP2	TS1AYE	2
LAMP3	TS1ARE	3
LAMP4	TS1BGE	4
LAMP5	TS1BRE	5
LAMP6		6
LAMP7		7
LAMP8		8
N/A		9
LAMPB1	LAMP +	10
LAMPB1	LAMP +	11
LAMPN1	LAMP -	12
N/A		13
VSSR1+	VSTOP3	14
VSSR1-	NVSTOP3	15

J3

LAMP9		1
LAMP10		2
LAMP11		3
LAMP12		4
LAMP13		5
LAMP14		6
LAMP15		7
LAMP16		8
N/A		9
LAMPB2	LAMP +	10
LAMPB2	LAMP +	11
LAMPN2	LAMP -	12
N/A		13
VSSR2+		14
VSSR2-		15

J4

EMPTY (SLOT 7)

EMPTY (SLOT 8)

EMPTY (SLOT 9)

PERSONALITY MODULE LEGEND

TERMINAL LABEL → XXX

XXXX [X] X ← PIN NUMBER

APPLICATION DESCRIPTION

WIRE PRESENT

SIEMENS INDUSTRY INC			
DES.: BEH	DATE: 08/09/15	JOB NO.: PICA10597	
CKD.: MRB	ISSUE DATE: N/A	EST. NO.: XP-7959	
DRN.: BEH	PLAN NO.: N/A	SHEET 12 OF 27	
P. TIME: 14:54	P. DATE: 14-OCT-2015	CAD ID.: FRE-086.71-12	

PROPOSED D	M	Y	REVISIONS	D	C	COMPLETED D	M	Y	C
			AS INSTALLED			01	03	12	KJA

REGION SOUTHERN

SUB. FREEPORT 382

SIGNALS AND COMMUNICATIONS HOMEWOOD

DES. KJA

25 AUGUST 2011

CH. GGS

IXS VLC MODULE CONNECTOR USAGE

ROCKFORD CP WEST

FRE-086.71-12

SIEMENS INDUSTRY INC
LOUISVILLE DIVISION, LOUISVILLE, KY

REVISIONS			
NO.	DATE	BY	DESCRIPTION	APP. BY
1				
2				
3				
4				
5				

VITAL CONFIGURATION SETTINGS

SET.	STATUS	TRUE	FALSE	BIT MEANING BIT MEANING
1	FC1SW	X		TRUE INDICATES STATUS OF BLOCK IN ADVANCE OF FACING SIG.
2	FC5SW	X		TRUE INDICATES STATUS OF 2 BLOCKS IN ADVANCE OF FACING SIG.
3	TMC1SW	X		TRUE INDICATES STATUS OF BLOCK IN ADVANCE OF TRAILING SIG.
4	TMC5SW	X		TRUE INDICATES STATUS OF 2 BLOCKS IN ADVANCE OF TRAILING SIG.
5	C5-FAK	X		TRUE FOR APPROACH BLOCK INDICATION, FALSE FOR APPROACH TRACK INDICATION TO FACING SIGNAL
6	C5-TMAK	X		TRUE FOR APPROACH BLOCK INDICATION, FALSE FOR APPROACH TRACK INDICATION TO TRAILING MAIN SIGNAL
7				
8	TPOUT_ON		X	TRUE FOR VITAL TRACK REPEATER OUTPUT
9	CXPOUT_ON		X	TRUE FOR VITAL HWY CROSSING ASR OUTPUT
10	APPLITE_ON		X	TRUE FOR APPROACH LIGHTING, FALSE FOR CONTINUOUS LIGHTING
30	TST_NOVTL		X	TRUE TO ALLOW CALL-ON SIGNAL MOVES INTO DARK SIDING
31	DOOR_ORSW_EN		X	TRUE FOR 2 MINUTE DELAY BEFORE DOOR INDICATION IS SENT TO RTC
32			X	

APPLICATION GENERATED FAULT INDICATIONS, VIO-86S MODULE FLASHING VITAL OUTPUT LED FAULT GUIDE

SLOT	OUTPUT *	FAULT MEANING
X	X	XXXXXXXXXXXXXXXXXXXXXXXXXXXXXXXX XXXXXXXXXXXXXXXXXXXXXXXXXXXXXXXX
X	X	XXXXXXXXXXXXXXXXXXXXXXXXXXXXXXXX XXXXXXXXXXXXXXXXXXXXXXXXXXXXXXXX

DIAGNOSTIC PORT CONFIG. SETTINGS (UNDER SYSTEM CONFIGURATION MENU)

CONNECTOR	CIO-1A
BAUD RATE	9600
PARITY	NONE
DATA BITS	8
STOP BITS	1
FLOW	NONE

OFFICE PORT CONFIG. SETTINGS (UNDER SYSTEM CONFIGURATION MENU)

PROTOCOL	GENISYS
BAUD RATE	9600
PARITY	NONE
STOP BITS	1
FLOW	ENA
* OF IND	6
UNIT ADDRESS	011
CTRL LATCH	ENA
IND DELAY	0.0 sec
CONST IND	DIS
MSG TIMEOUT	10 sec
XMT DELAY	50 ms
XMT CUTOFF	20 ms
CTS TIMEOUT	1 SEC
SECURE POLL	DIS
PORT	OFF

VPM3 ETHERNET SETUP

PORT 1 (TOP) IP ADDRESS	192.168.0.11
SUBNET MASK	255.255.255.0
PORT 2 (BOTTOM) IP ADDRESS	192.168.1.12
SUBNET MASK	255.255.255.0
DEFAULT GATEWAY	0.0.0.0

EXECUTIVE INFORMATION

VPM-3	VERSION	CRC
VPM-A PROCESSOR	6.10	44D9404C
VPM-B PROCESSOR	6.10	ABBDFF22
VPM-C PROCESSOR	6.10	7687FFF4

VITAL TIMER SETTINGS

TIMER	VALUE
ASR LONG TIME	12 MIN*
ASR SHORTER LONG TIME	60 SEC
ASR SHORT TIME	10 SEC*
OST LOS	10 SEC
N SW. OVERLOAD	40 SEC
R SW. OVERLOAD	40 SEC
FTD	12 SEC*
TTD	12 SEC*
F LOCK RELEASE LONG TIME	10 MIN*
F LOCK RELEASE SHORT TIME	2 MIN*
TM LOCK RELEASE LONG TIME	10 MIN*
TM LOCK RELEASE SHORT TIME	2 MIN*
TS LOCK RELEASE LONG TIME	10 MIN*
TS LOCK RELEASE SHORT TIME	2 MIN*

* = SET TO DEFAULT

APPLICATION SOFTWARE INFORMATION

ROCKFORD_WEST.MB1	CHECKSUM: 2B21 / CRC: B535
REV.	XX
ROCKFORD_WESTV.B1	CHECKSUM: B66A / CRC: 307F
ROCKFORD_WESTNV.B1	CHECKSUM: 38B4 / CRC: E155
YEAR COMPILED	12
MONTH COMPILED	01
CHASSIS ID	6

CHASSIS ID DIP SHUNTS
LOCATED ON BACKPLANE
UNDERNEATH XCI-2 MODULE

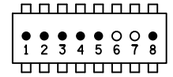

● = TAB PUNCHED OUT (BROKEN)
○ = TAB INTACT (MADE)

APPLICATION ID DIP SHUNTS
LOCATED INSIDE XCI-2 MODULE
UNDERNEATH EPROM

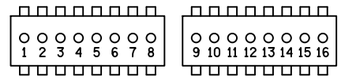

● = TAB PUNCHED OUT (BROKEN)
○ = TAB INTACT (MADE)

PROGRAM ED SHEET: = WEST ROCKFORD END OF SIDING

TYPICAL INSTALLATION OF
EPROM & DIP SHUNT

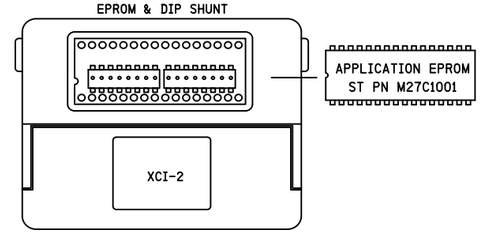

DIAGNOSTIC AND OFFICE PORT PIN ASSIGNMENT

PIN	SIGNAL	SIGNAL NAME
1	CD	CARRIER DETECT
2	RX	RECEIVE DATA
3	TX	TRANSMIT DATA
4	DTR	DATA TERM READY
5	GND	COMMON SIGNAL RETURN
6	DSR	DATA SET READY
7	RTS	REQUEST TO SEND
8	CTS	CLEAR TO SEND
9	RI	RING INDICATOR

fre-086.71-13.dgn
14-OCT-2015

SIEMENS INDUSTRY INC			
DES. : BEH	DATE: 08/09/15	JOB NO.: PICA10597	
CKD. : MRB	ISSUE DATE: N/A	EST. NO. XP-7959	
DRN. : BEH	PLAN NO.: N/A	SHEET 13 OF 27	
P. TIME: 14:54	P. DATE: 14-OCT-2015	CAD ID.: FRE-086.71-13	

PROPOSED D	M	Y	REVISIONS	D	C	COMPLETED D	M	Y	C
			AS INSTALLED			01	03	12	KJA

REGION SOUTHERN
SUB. FREEPORT 382

SIGNALS AND COMMUNICATIONS HOMEWOOD
25 AUGUST 2011
DES. KJA
CH. GGS

IXS VLC CHASSIS ID & VITAL CONFIGURATION SETTINGS

ROCKFORD CP WEST

FRE-086.71-13

SIEMENS INDUSTRY INC
LOUISVILLE DIVISION, LOUISVILLE, KY

REVISIONS				
NO.	DATE	BY	DESCRIPTION	APP. BY
1				
2				
3				
4				
5				

SOFTWARE CONFIGURATION PROPERTIES

PTC SOFTWARE INFORMATION				
FILE	NAME	CRC	REV.	DATE
RULES LIBRARY	CN_USOR_GETS_LIBRARY	2EDB4DB6	03	
STATUS NAME	FREEPORT_WEST.MB1	B535		01-11-12
PTC CONFIG.	FRE-086.71.PTCBCFG	TBD	XX	
PTC MAPPING	ROCKFORD WEST.PTCBMAP	TBD	XX	
ED SHEET	ED_WEST_ROCKFORD.PDF			

STATUS MSG. BODY USE

DEVICE	START BIT	END BIT
SWITCH	00	01
SIGNAL F	02	06
SIGNAL TM	07	11
SIGNAL TS	12	16
SIGNAL TS1	17	21

WAYSIDE DEVICES

SWITCH

DEVICE TYPE	VHLC- ELX- EC5
DEVICE STATUS OFFSET	00
MIN. DEBOUNCE TIME	0
DEFAULT DEBOUNCE TIME	0
MAX. DEBOUNCE TIME	0

SIGNAL F

DEVICE TYPE	VHLC- ELX- EC5
DEVICE STATUS OFFSET	02
MIN. DEBOUNCE TIME	0
DEFAULT DEBOUNCE TIME	0
MAX. DEBOUNCE TIME	0

APPLICABILITY PROPERTY	ENABLED	FP
NUMBER PLATE	□	□
LOW SIGNAL	□	□
ROUTE SIG.	■	□
SPEED SIG.	□	□
RULES 833-844	□	□
RULES 865-874	□	□
WD SPCNG 865-874	□	□

SIGNAL TS

DEVICE TYPE	VHLC- ELX- EC5
DEVICE STATUS OFFSET	12
MIN. DEBOUNCE TIME	0
DEFAULT DEBOUNCE TIME	0
MAX. DEBOUNCE TIME	0

APPLICABILITY PROPERTY	ENABLED	FP
NUMBER PLATE	□	□
LOW SIGNAL	□	□
ROUTE SIG.	■	□
SPEED SIG.	□	□
RULES 833-844	□	□
RULES 865-874	□	□
WD SPCNG 865-874	□	□

SIGNAL TM

DEVICE TYPE	VHLC- ELX- EC5
DEVICE STATUS OFFSET	07
MIN. DEBOUNCE TIME	0
DEFAULT DEBOUNCE TIME	0
MAX. DEBOUNCE TIME	0

APPLICABILITY PROPERTY	ENABLED	FP
NUMBER PLATE	□	□
LOW SIGNAL	□	□
ROUTE SIG.	■	□
SPEED SIG.	□	□
RULES 833-844	□	□
RULES 865-874	□	□
WD SPCNG 865-874	□	□

SIGNAL TS1

DEVICE TYPE	VHLC- ELX- EC5
DEVICE STATUS OFFSET	17
MIN. DEBOUNCE TIME	0
DEFAULT DEBOUNCE TIME	0
MAX. DEBOUNCE TIME	0

APPLICABILITY PROPERTY	ENABLED	FP
NUMBER PLATE	□	□
LOW SIGNAL	□	□
ROUTE SIG.	■	□
SPEED SIG.	□	□
RULES 833-844	□	□
RULES 865-874	□	□
WD SPCNG 865-874	□	□

GENERAL WIU SETTINGS

WIU ADDRESS	736034608671
BEACON CONTINUOUS	□
BEACON ON CHANGE	■
BEACON RATE	1000 ms
BEACON BIT TIME	300 SECONDS
BEACON END TIME	120 SECONDS
MAX. BEACON INTERVAL	900 SECONDS
TIME ZONE	-6 HRS. FROM GMT
OBSERVE DST	■
DST START:	MONTH MAR WEEK 2
DST END:	MONTH NOV WEEK 1
TIME SYNC SOURCE:	NONE

PTC TIME SETTINGS

TIME MESSAGES BEFORE SENDING WSM	5
IGNORED TIME DIFFERENCE	3 SEC.
MAX. TIME CHANGE WITHIN MINUTES	60 MIN.
NO TIME SYNC MESSAGE	6 MIN.
TIME MESSAGE DEVIATION	1 SEC.
MAX. SECONDS TIME CHANGE	3 SEC.
LRM MAX. SEC. TIME DIFFERENCE	3 SEC.
PTC TIME RESYNC ENABLE	■

EMP SETTINGS

SOURCE ADDRESS	cn.w.346.086.71.wiu
DESTINATION ADDRESS	cn.i.x.000000:tmc
TIME FORMAT	ABSOLUTE
DATA INTEGRITY	APP. SPECIFIC
ENCRYPTION ENABLED	□
COMPRESSION ENABLED	□
TTL(TIMED BEACON)	12 SECONDS
QoS(TIMED BEACON)	1
TTL(GET WIU STATUS)	12 SECONDS
QoS(GET WIU STATUS)	1

CLASS D SETTINGS

DESTINATION IP ADDRESS	10.255.255.210
DESTINATION TCP PORT	3001
MODE	BIDIRECTIONAL
LOG TRAFFIC	□
KEEP ALIVE INTERVAL	30000 ms
KEEP ALIVE ACK TIMEOUT	15000 ms
DATA ACK ENABLED	■
DATA ACK TIMEOUT	15000 ms
CONNECTION TIMEOUT	30000 ms
CONNECTION DELAY	60000 ms
NAK RETRY LIMIT	3
CONNECTION RETRY LIMIT	-1
RETRANSMIT DELAY	0
RECONNECTION LIMIT	-1

GENERAL ETHERNET SETTINGS

USE SIGNAL SYS. ETHERNET SETTINGS	■

DEF. GATEWAY	0.0.0.0

PORT	IP ADDRESS	SUBNET MASK
PORT 1	0.0.0.0	255.255.255.0
PORT 2	0.0.0.0	255.255.255.0

DHCP SERVER SETTINGS

PORT	ENABLED	IP POOL START ADDRESS	IP POOL END ADDRESS	DEFAULT GATEWAY
PORT 1	ENABLED	192.168.0.12	192.168.0.43	0.0.0.0
PORT 2	ENABLED	192.168.1.13	192.168.1.44	0.0.0.0

WEB INTERFACE

PORT	GUI ACCESS LEVEL
PORT 1	READ-WRITE
PORT 2	READ-WRITE

INACTIVITY TIMEOUT	60 MIN.
WEB PORT NUMBER	80

	ENABLED	NETWORK	NET MASK
TRUSTED SOURCE 1	DISABLED	0.0.0.0	255.255.255.0
TRUSTED SOURCE 2	DISABLED	0.0.0.0	255.255.255.0

ROUTING TABLE

DESTINATION NET.	NET MASK	GATEWAY	ETHERNET PORT

PROPOSED D	PROPOSED M	PROPOSED Y	REVISIONS	D	C	COMPLETED D	COMPLETED M	COMPLETED Y	C
			AS INSTALLED			01	03	12	KJA

REGION SOUTHERN

SUB. FREEPORT 382

SIGNALS AND COMMUNICATIONS HOMEWOOD

25 AUGUST 2011

DES. KJA

CH. GGS

PTC WIU SOFTWARE CONFIGURATION

ROCKFORD CP WEST

FRE-086.71-14

fre-086.71-14.dgn
14-OCT-2015

SIEMENS INDUSTRY INC

DES.: BEH	DATE: 08/09/15	JOB NO.: PICA10597	
CKD.: MRB	ISSUE DATE: N/A	EST. NO.: XP-7959	
DRN.: BEH	PLAN NO.: N/A	SHEET 14 OF 27	
P. TIME: 14:54	P. DATE: 14-OCT-2015	CAD ID.: FRE-086.71-14	

REVISIONS				
NO.	DATE	BY	DESCRIPTION	APP. BY
1				
2				
3				
4				
5				

NOTES

(1) ALL CABLE IS 6 CONDUCTOR (MINIMUM) #22 STRANDED WITH A SINGLE SHIELD SURROUNDING ALL INTERNAL CONDUCTORS

(2) ALL MALE/FEMALE DESIGNATIONS REFER TO THE CABLE TERMINATIONS NOT THE EQUIPMENT. ALL CONNECTOR HOODS ARE METAL WITH AN ELECTRICAL CONNECTION TO THE SHIELD AND LABELLED APPROPRIATELY. PREFERABLY THE WCM CABLE ENDS SHOULD HAVE A 90 DEGREE COVER WITH THE CABLE EXITING TOWARDS THE BACK

(3) ALL CONNECTOR HOODS ARE ELECTRICALLY ATTACHED TO THE SHIELD. WCM CONNECTOR END HAS A GREEN #22 STRANDED WIRE 12 INCHES IN LENGTH WHICH IS ELECTRICALLY CONNECTED TO THE CABLE SHIELD AND TERMINATED WITH AN EYE TO BE ATTACHED TO THE RACK MOUNTING BOLT

(4) IMPORTANT!!! WCM J1 PORT MUST BE CONFIGURED WITH CTS SET TO YES. THIS WILL CHANGE THE CRC FOR THE LOCATION. UPDATE DOCUMENTATION AND INFORM MAINTENANCE STAFF IMMEDIATELY WHEN IMPLEMENTING

(5) ECHELON TWISTED PAIR. USE BELDEN CABLE. PART # 8461-u500-60 FOR ALL ECHELON WIRING

(6) ALL EQUIPMENT TO BE BONDED TO GROUND BAR

- DENOTES TWISTED PAIR

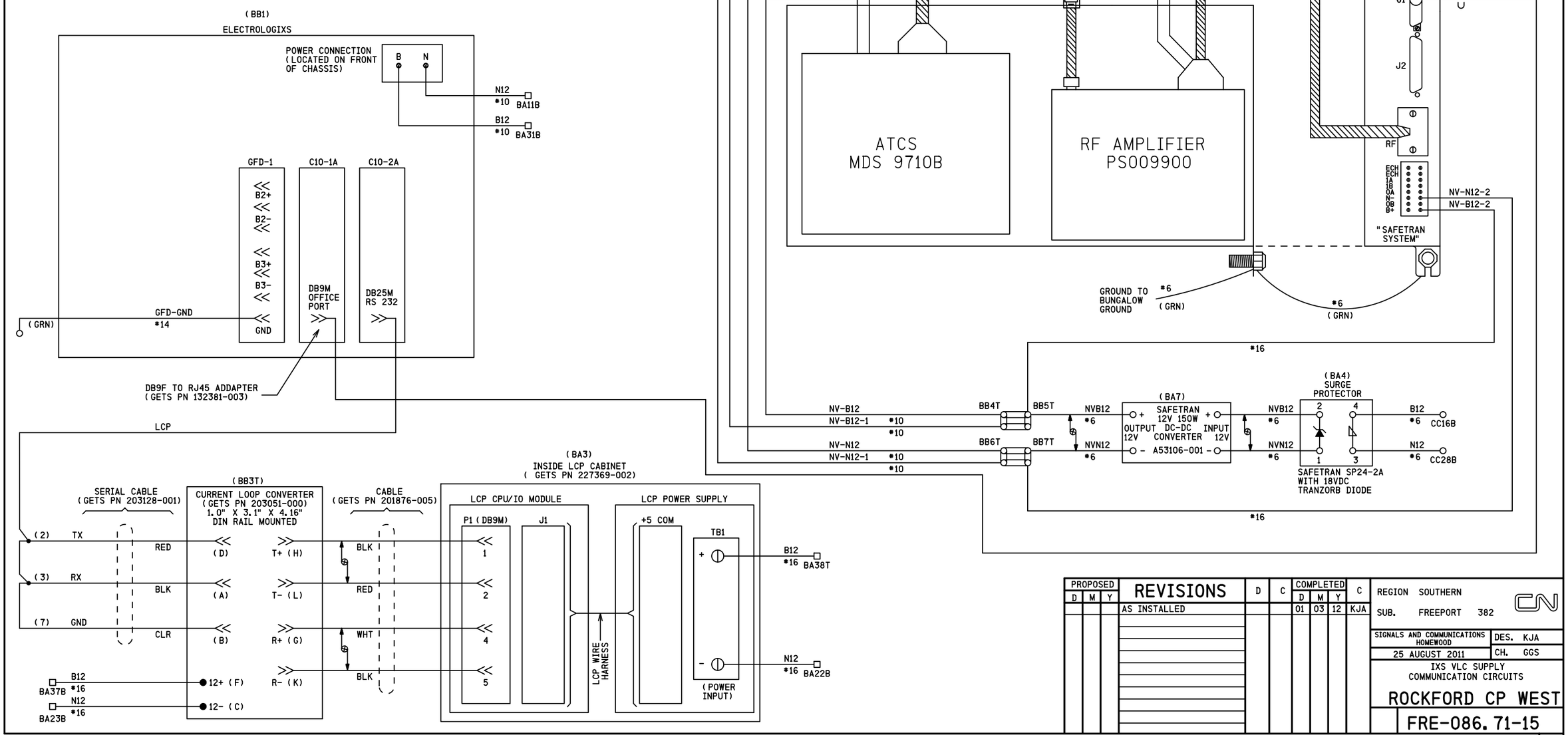

PROPOSED D	M	Y	REVISIONS	D	C	COMPLETED D	M	Y	C
			AS INSTALLED			01	03	12	KJA

REGION SOUTHERN
SUB. FREEPORT 382

SIGNALS AND COMMUNICATIONS HOMEWOOD
25 AUGUST 2011
DES. KJA
CH. GGS

IXS VLC SUPPLY COMMUNICATION CIRCUITS

ROCKFORD CP WEST

FRE-086.71-15

fre-086.71-15.dgn
14-OCT-2015

SIEMENS INDUSTRY INC

DES.: BEH	DATE: 08/09/15	JOB NO.: PICA10597	
CKD.: MRB	ISSUE DATE: N/A	EST. NO.: XP-7959	
DRN.: BEH	PLAN NO.: N/A	SHEET 15 OF 27	
P TIME: 14:54	P DATE: 14-OCT-2015	CAD ID.: FRE-086.71-15	

SIEMENS INDUSTRY INC
LOUISVILLE DIVISION, LOUISVILLE, KY

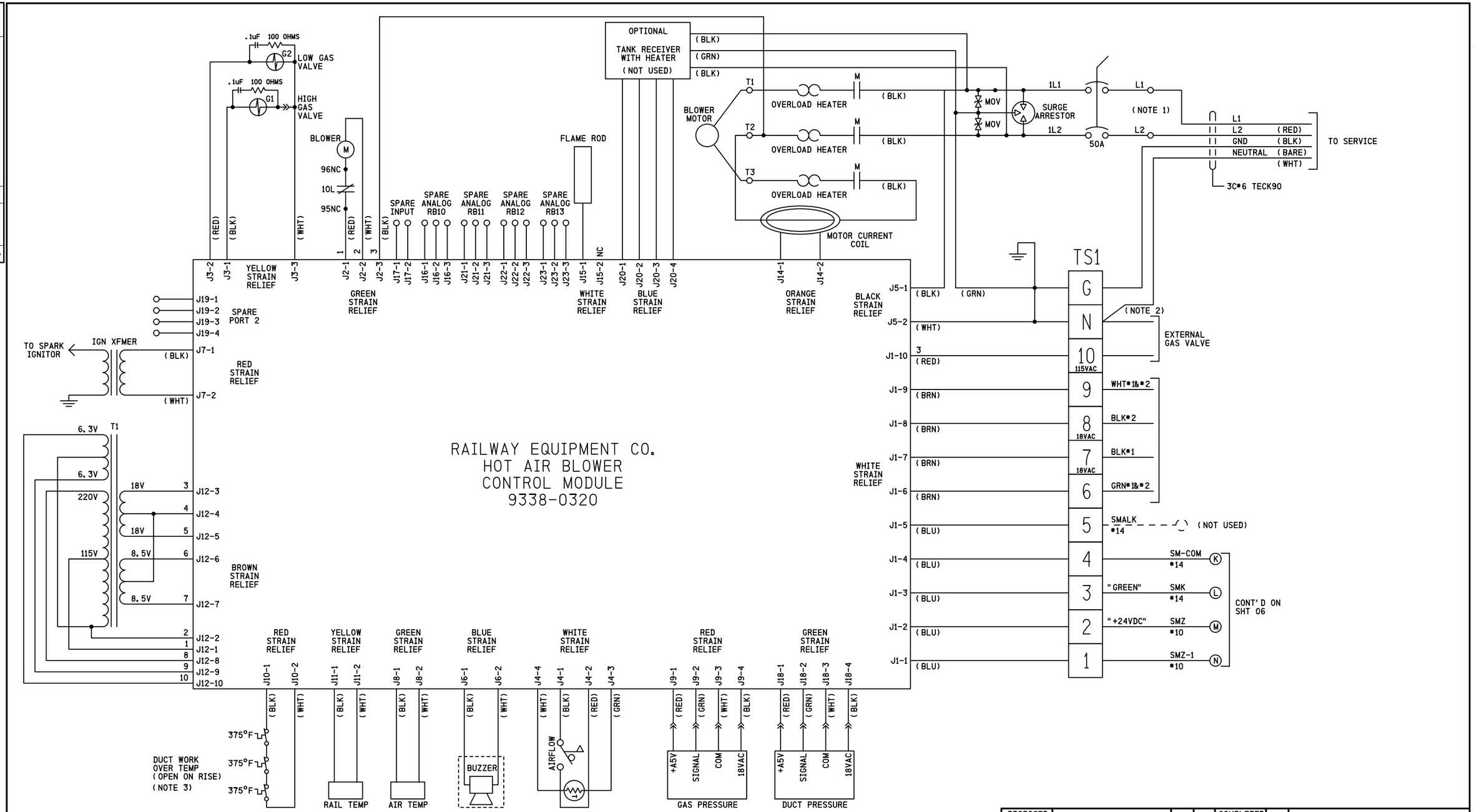

NOTES
1) THIS UNIT IS DESIGNED FOR 230VAC, 1 PHASE, 60HZ WITH CENTER TAP NEUTRAL
2) CENTER TAP NEUTRAL MUST BE GROUNDED AT SOURCE
3) IF DUCT WORK OVER TEMP SENSOR IS NOT USED, INSTALL A JUMPER BETWEEN J10-1 & J10-2
4) PLACE SWITCH SS1 IN THE "AUTO" POSITION TO ALLOW FOR REMOTE CONTROL
5) IN THE CONTROLLER MENU:
SET THE TEMPERATURE SET POINT TO 41° F
SET RUN TIMER TO 000 MINUTES
SET START DELAY TIMER TO 010 SECONDS
SET BURNER OPERATION TO AUTO
SET GAS TO NATURAL OR PROPANE
SET MOTOR SIZE TO 220V 2HP FOR MODELS 950/951
SET MOTOR SIZE TO 220V 5HP FOR MODELS 952/953
SET RAIL TEMPERATURE SET POINT TO 032° F

" " -DENOTES REFERENCE, NOT WIRE TAG

REVISIONS				
NO.	DATE	BY	DESCRIPTION	APP. BY
1				
2				
3				
4				
5				

PROPOSED D	M	Y	REVISIONS	D	C	COMPLETED D	M	Y	C
			AS INSTALLED			01	03	12	KJA

REGION SOUTHERN
SUB. FREEPORT 382
SIGNALS AND COMMUNICATIONS HOMEWOOD
25 AUGUST 2011
DES. KJA
CH. GGS
SCD CONTROL & INDICATION CIRCUITS
ROCKFORD CP WEST
FRE-086.71-16

fre-086.71-16.dgn
14-OCT-2015

SIEMENS INDUSTRY INC
DES.: BEH | DATE: 08/09/15 | JOB NO.: PICA10597
CKD.: MRB | ISSUE DATE: N/A | EST. NO.: XP-7959
DRN.: BEH | PLAN NO.: N/A | SHEET 16 OF 27
P. TIME: 14:54 | P. DATE: 14-OCT-2015 | CAD ID.: FRE-086.71-16

SIEMENS INDUSTRY INC
LOUISVILLE DIVISION, LOUISVILLE, KY

REVISIONS				
NO.	DATE	BY	DESCRIPTION	APP. BY
1				
2				
3				
4				
5				

8′ BY 8′ TOP VIEW:

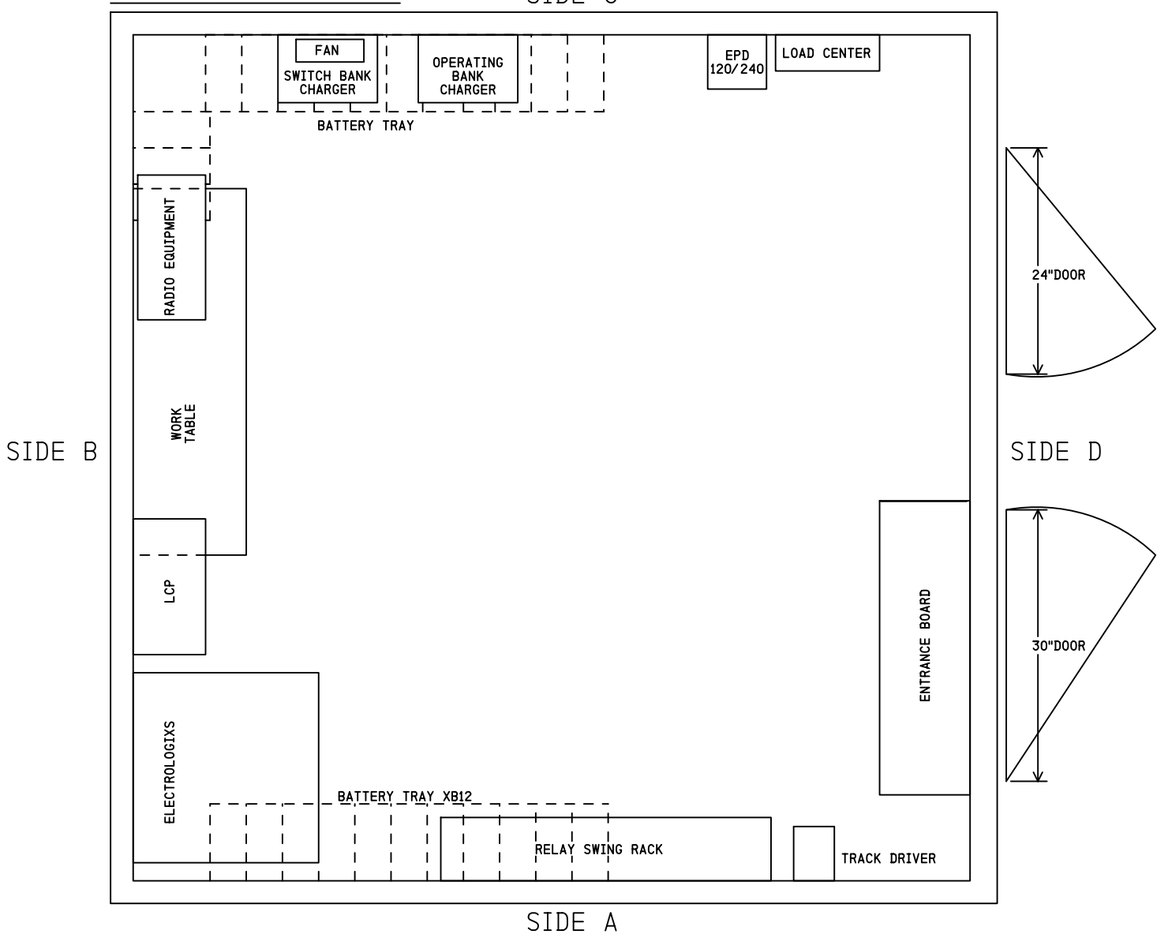

SIDE VIEW: SIDE A

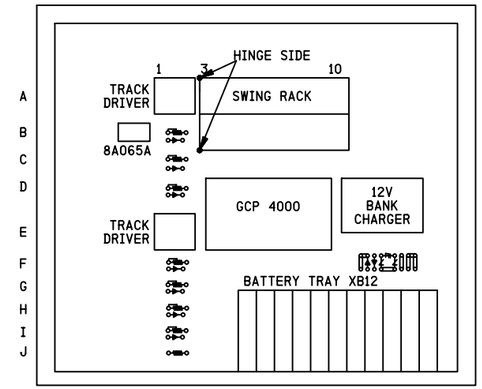

SIDE VIEW: SIDE B

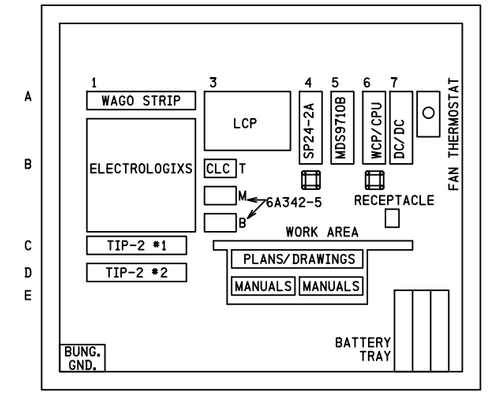

SIDE VIEW: SIDE C

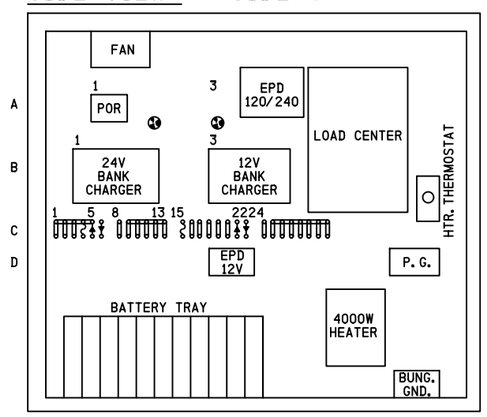

SIDE VIEW: SIDE D

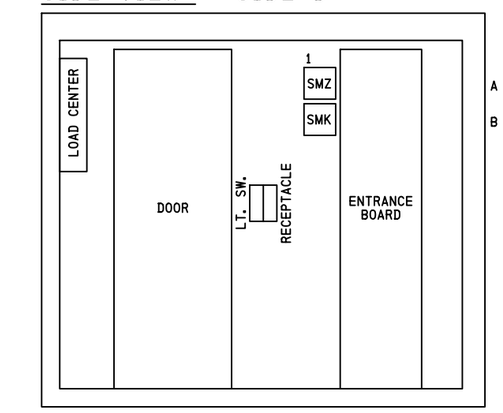

WAGO BLOCK MOUNTED ABOVE ELECTROLOGIXS CHASSIS

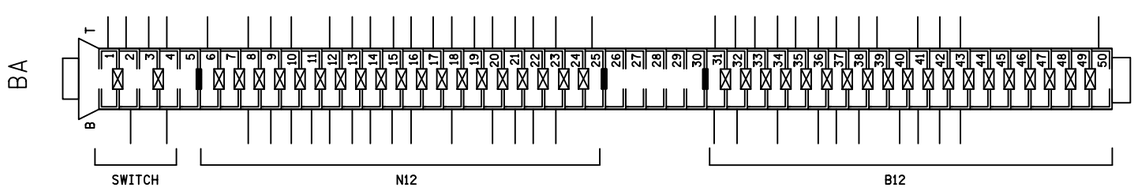

WAGO TERMINAL 2 COND. 24-10AWG (WAGO 282-601)

DENOTES WAGO JUMPER CN# 02-45-872 (WAGO 282-402)

DENOTES WAGO SEPARATOR (WAGO 282-337)

DENOTES WAGO END PLATE CN# 02-45-870 (WAGO 282-317)

DENOTES WAGO END STOP CN# 02-46-646 (WAGO 249-117)

PROPOSED D	PROPOSED M	PROPOSED Y	REVISIONS	D	C	COMPLETED D	COMPLETED M	COMPLETED Y	C
			AS INSTALLED			01	03	12	KJA

REGION SOUTHERN

SUB. FREEPORT 382

SIGNALS AND COMMUNICATIONS HOMEWOOD — DES. KJA

25 AUGUST 2011 — CH. GGS

BUNGALOW LAYOUT 8′X 8′
SIDE "A","B","C","D"

ROCKFORD CP WEST

FRE-086.71-17

SIEMENS INDUSTRY INC			
DES.: BEH	DATE: 08/09/15	JOB NO.: PICA10597	
CKD.: MRB	ISSUE DATE: N/A	EST. NO.: XP-7959	
DRN.: BEH	PLAN NO.: N/A	SHEET 17 OF 27	
P TIME: 14:54	P DATE: 14-OCT-2015	CAD ID.: FRE-086.71-17	

fre-086.71-17.dgn
14-OCT-2015

SIEMENS INDUSTRY INC
LOUISVILLE DIVISION, LOUISVILLE, KY

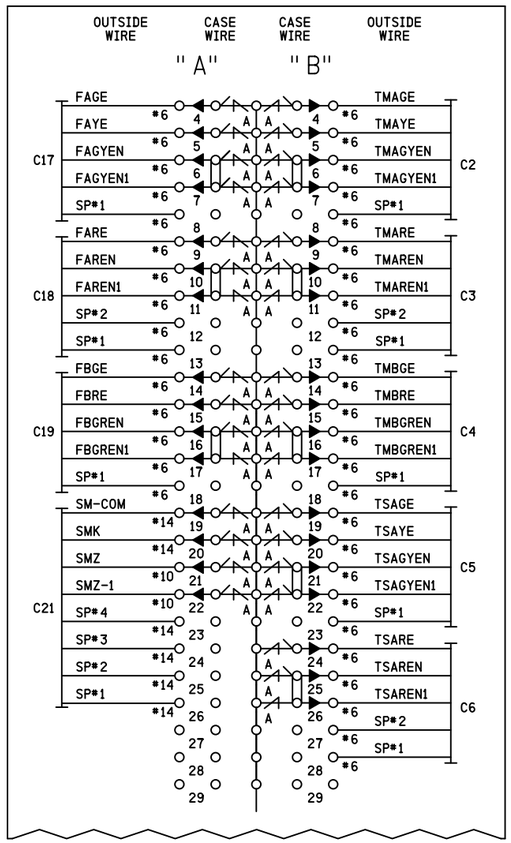

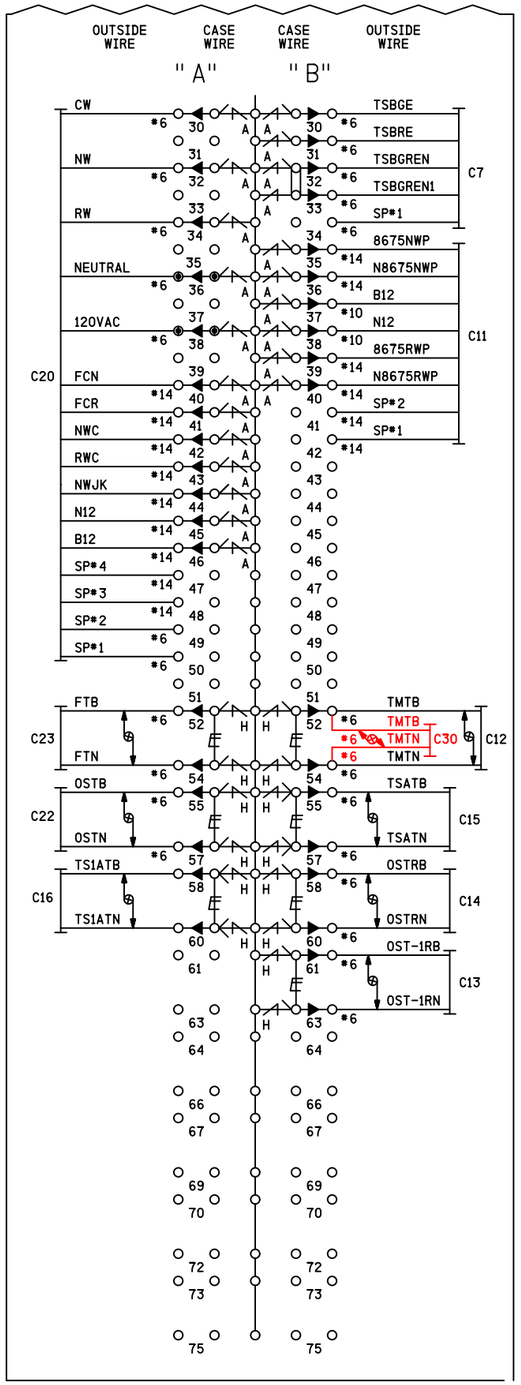

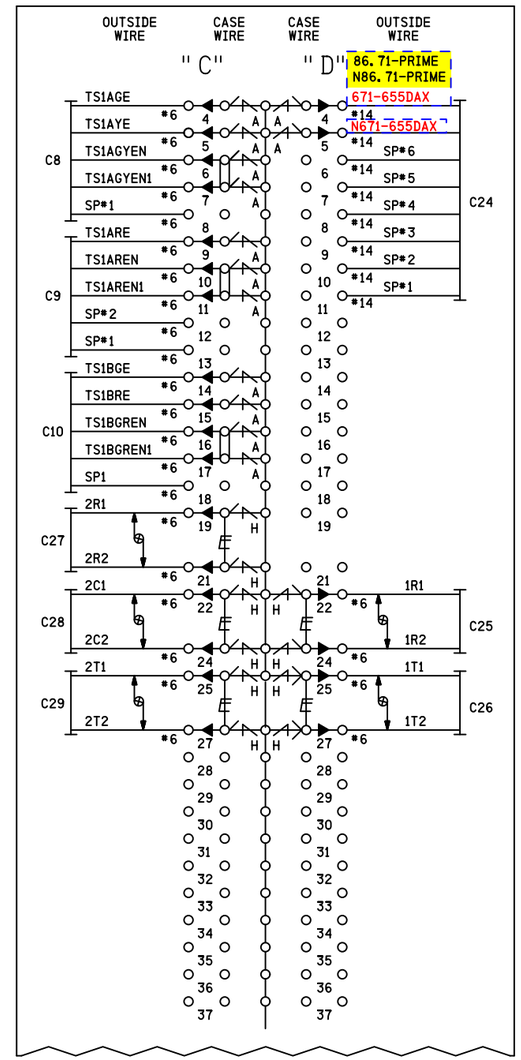

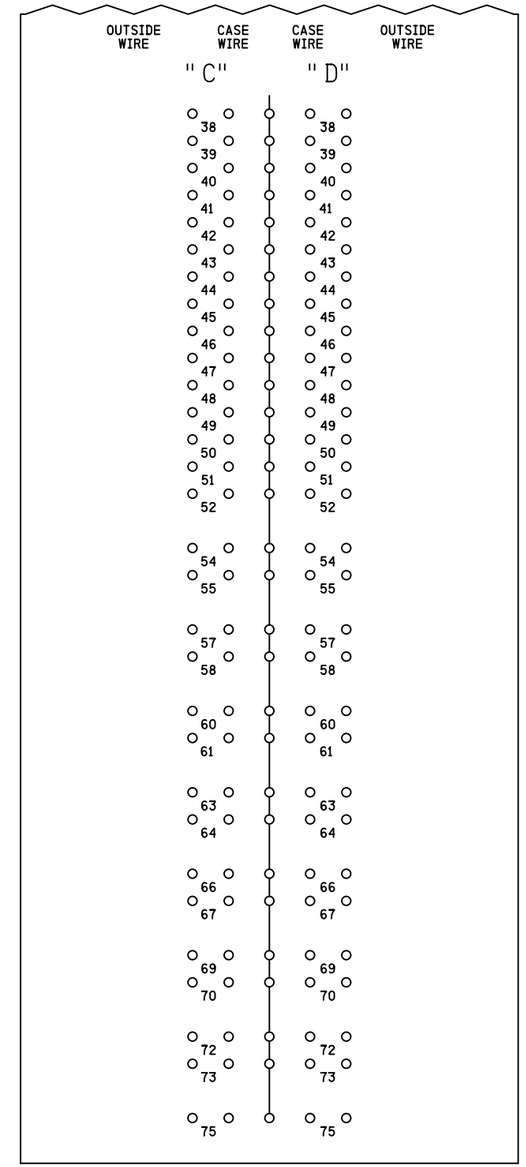

NOTES

- DENOTES INSULATED TERMINAL
- DENOTES HD EQUALIZER CN# 02-32-391 SAFETRAN # 4000-44700-001X
- "A" DENOTES AIR GAP ARRESTOR CN# 02-25-168 SAFETRAN # 4000-44485-028X
- "H" DENOTES HD AIR GAP ARRESTOR CN# 02-25-006 SAFETRAN # 4000-44585-001X
- DENOTES GROUND PLANE
- DENOTES TWISTED PAIR
- DENOTES TEST LINK

DENOTES PROPOSAL 15-0099
REVISION 08/09/15

SII 08 SEP 2015

PROPOSED
DESIGN NO. 15-0099
RED-IN YELLOW-OUT

AS INSTALLED
DATE _____
BY _____
(PRINT NAME)

PROPOSED
DESIGN NO. 11-0497
RED-IN YELLOW-OUT

AS INSTALLED
DATE _____
BY _____
(PRINT NAME)

PROPOSED D	PROPOSED M	PROPOSED Y	REVISIONS	D	C	COMPLETED D	COMPLETED M	COMPLETED Y	C
			AS INSTALLED			01	03	12	KJA
27	03	12	ADD TRACK WIRES	KJA	GGS				
08	09	15	M.086.55 UPGRADE	BEH	MRB				

REGION SOUTHERN
SUB. FREEPORT 382
SIGNALS AND COMMUNICATIONS HOMEWOOD
25 AUGUST 2011
DES. KJA
CH. GGS
MAIN TERMINAL BOARD DETAIL SIDE "D"
ROCKFORD CP WEST
FRE-086.71-18

NO.	DATE	BY	DESCRIPTION	APP. BY
1				
2				
3				
4				
5				

REVISIONS

SIEMENS INDUSTRY INC
DES.: BEH DATE: 08/09/15 JOB NO.: PICA10597
CKD.: MRB ISSUE DATE: N/A EST. NO.: XP-7959
DRN.: BEH PLAN NO.: N/A SHEET 18 OF 27
P TIME: 14:54 P DATE: 14-OCT-2015 CAD ID.: FRE-086.71-18

fre-086.71-18.dgn
14-OCT-2015

SIEMENS INDUSTRY INC
LOUISVILLE DIVISION, LOUISVILLE, KY