| REVISIONS | | | | |
|---|---|---|---|---|
| NO. | DATE | BY | DESCRIPTION | APP. BY |
| 1 | | | | |
| 2 | | | | |
| 3 | | | | |
| 4 | | | | |
| 5 | | | | |

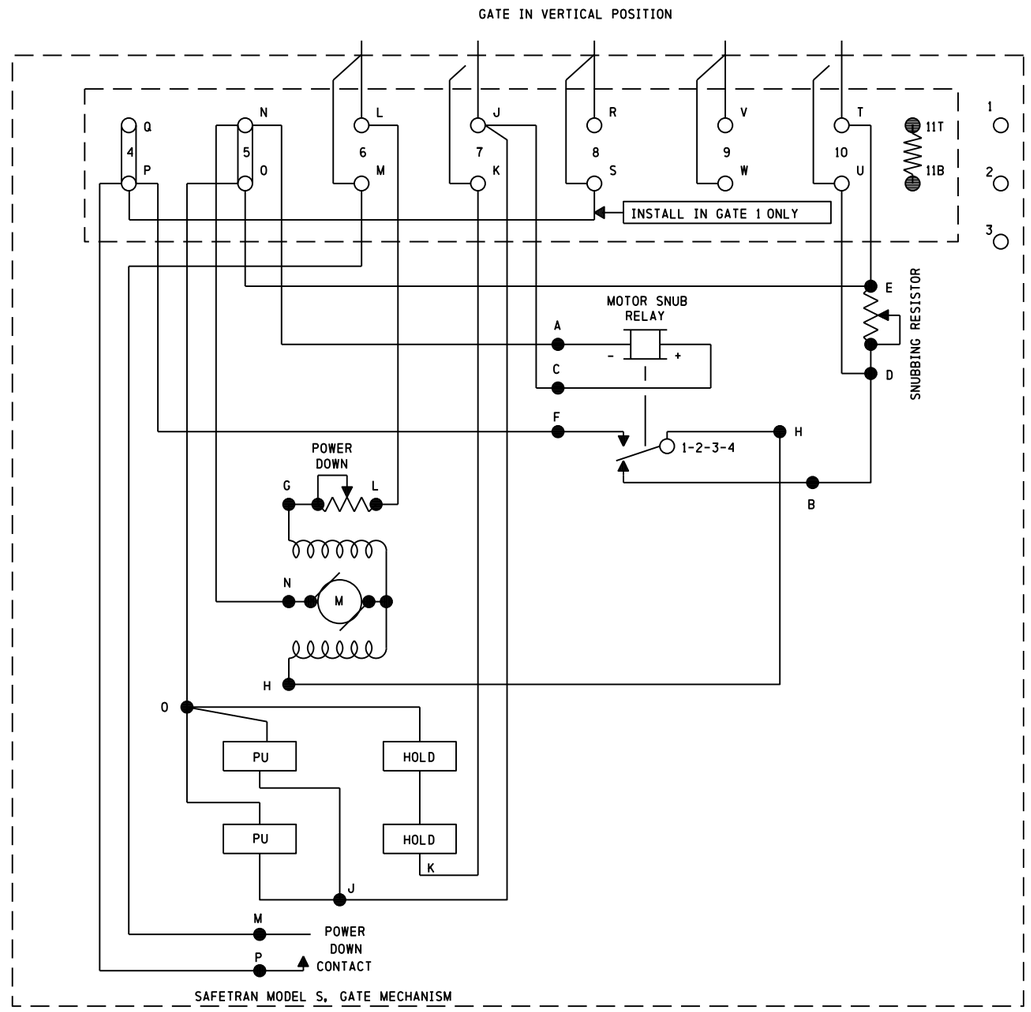


| CIRCUIT CONTROLLER OPERATION AND FUNCTIONS | | |
|---|---|---|
| CONTACT SPACE | CONTACT CLOSED AT | FUNCTION OF CONTACT |
| L-M | 45-90 DEG. | POWER DOWN CONTROL |
| J-K | 0-89 DEG. | POWER UP CONTROL |
| R-S | 83-90 DEG. | GPXR CONTROL |
| V-W | 5-90 DEG. | BELL/GDK |
| T-U | 0-5 DEG. | MOTOR SNUB CONTROL |

● =INSULATED NUT

ALL WIRE THIS SHEET #10 AWG UNLESS OTHERWISE NOTED.

SIII 13 MAR 2014

PROPOSED
DESIGN NO. PTC-003
RED-IN YELLOW-OUT

AS INSTALLED
DATE
BY
(PRINT NAME)

| PROPOSED D | M | Y | REVISIONS | D | C | COMPLETED D | M | Y | C |
|---|---|---|---|---|---|---|---|---|---|
| | | | PLAN REDRAWN | | | 13 | 03 | 14 | MAB |
| 13 | 03 | 14 | PTC UPGRADE | BSH | MAB | | | | |

REGION SOUTHERN
SUB. CHAMPAIGN 341

SIGNALS AND COMMUNICATIONS HOMEWOOD
13 OCTOBER 2000
DES. HARMON
CH.

INTERNAL GATE MECHANISM CIRCUITS

EFFINGHAM, IL
RICKELMAN AVE

CHA-196.80-18 20

DOT# 289 178A

SIEMENS INDUSTRY INC

| | | | |
|---|---|---|---|
| DES.: BSH | DATE: 03/13/14 | JOB NO.: JXXE04655 | |
| CKD.: MAB | ISSUE DATE: N/A | EST. NO.: QDE000258 | |
| DRN.: BSH | PLAN NO.: N/A | SHEET 20 OF 39 | |
| P TIME: 13:46 | P DATE: $$PLOT_DATE | CAD ID.: CHA-196.80-20 | |

cha-196.80-20.dgn
24-SEP-2015

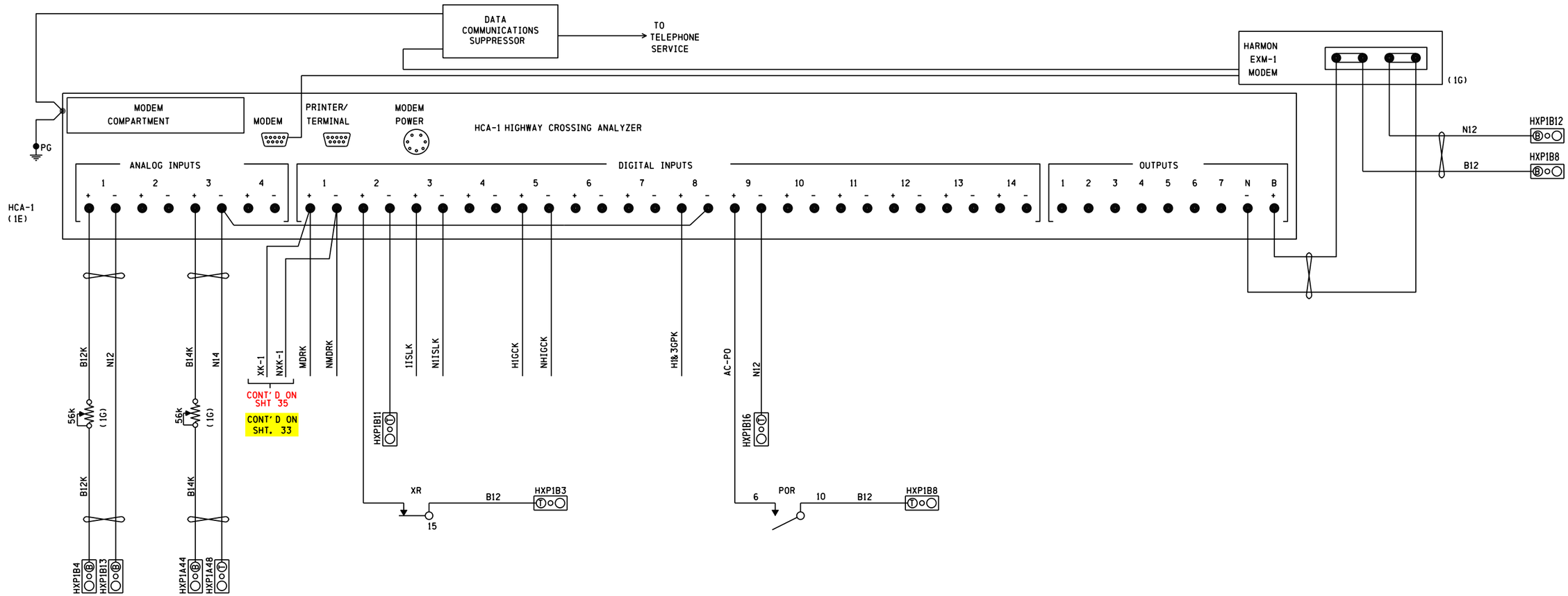


ALL WIRING THIS SHEET #16

| REVISIONS | | | | |
|---|---|---|---|---|
| NO. | DATE | BY | DESCRIPTION | APP. BY |
| 1 | | | | |
| 2 | | | | |
| 3 | | | | |
| 4 | | | | |
| 5 | | | | |

SIEMENS INDUSTRY INC

| | | | |
|---|---|---|---|
| DES.: BSH | DATE: 03/13/14 | JOB NO.: UXXE04655 | |
| CKD.: MAB | ISSUE DATE: N/A | EST. NO.: QDE000258 | |
| DRN.: BSH | PLAN NO.: N/A | SHEET 21 OF 39 | |
| P TIME: 13:46 | P DATE: $$PLOT_DATE | CAD ID.: CHA-196.80-21 | |

SII 13 MAR 2014

PROPOSED
DESIGN NO. PTC-003
RED-IN YELLOW-OUT

AS INSTALLED
DATE _____
BY _____
(PRINT NAME)

| PROPOSED D | PROPOSED M | PROPOSED Y | REVISIONS | D | C | COMPLETED D | COMPLETED M | COMPLETED Y | C |
|---|---|---|---|---|---|---|---|---|---|
| | | | PLAN REDRAWN | | | 13 | 03 | 14 | MAB |
| 13 | 03 | 14 | PTC UPGRADE | BSH | MAB | | | | |

REGION SOUTHERN
SUB. CHAMPAIGN 341

SIGNALS AND COMMUNICATIONS HOMEWOOD
DES. HARMON
13 OCTOBER 2000
CH.

RECORDER INTERFACE
EFFINGHAM, IL
RICKELMAN AVE

CHA-196.80-19

DOT# 289 178A

21

cha-196.80-21.dgn
24-SEP-2015

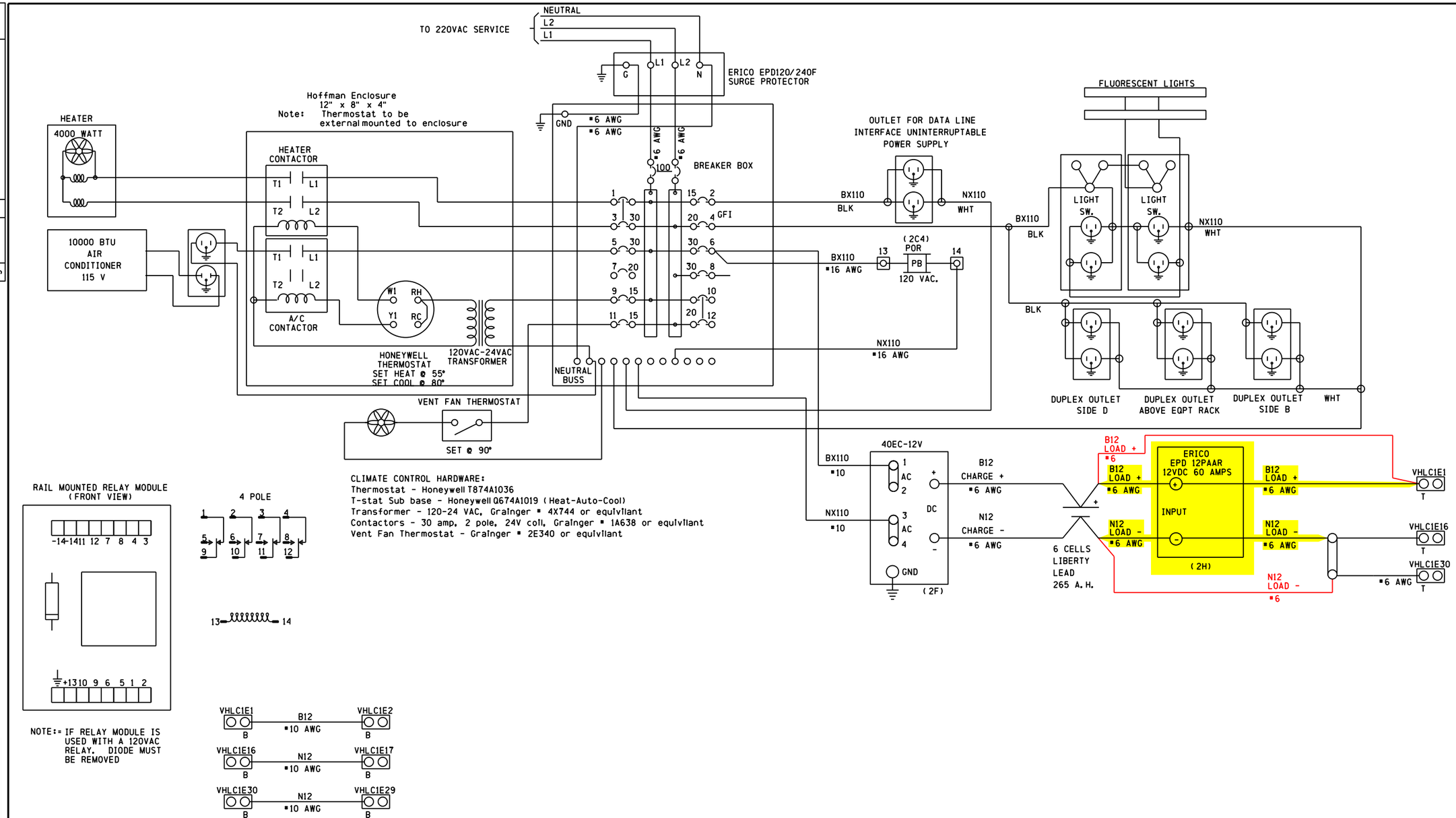


CLIMATE CONTROL HARDWARE:
Thermostat - Honeywell T874A1036
T-stat Sub base - Honeywell Q674A1019 (Heat-Auto-Cool)
Transformer - 120-24 VAC, Grainger # 4X744 or equivlant
Contactors - 30 amp, 2 pole, 24V coil, Grainger # 1A638 or equivlant
Vent Fan Thermostat - Grainger # 2E340 or equivlant







NOTE:= IF RELAY MODULE IS USED WITH A 120VAC RELAY. DIODE MUST BE REMOVED




NOTES:
1. ALL WIRING TO BE #12 THHN UNLESS OTHERWISE NOTED.
2. = TEST LINK - GOLD NUT ON FILLED SIDE
3. ● FILLED POST = INSULATED NUT.

SII 13 MAR 2014

PROPOSED
DESIGN NO. PTC-003
RED-IN YELLOW-OUT

AS INSTALLED
DATE _____
BY _____
(PRINT NAME)

| PROPOSED D | M | Y | REVISIONS | D | C | COMPLETED D | M | Y | C |
|---|---|---|---|---|---|---|---|---|---|
| | | | PLAN REDRAWN | | | 13 | 03 | 14 | MAB |
| 13 | 03 | 14 | PTC UPGRADE | BSH | MAB | | | | |

REGION SOUTHERN
SUB. CHAMPAIGN 341
SIGNALS AND COMMUNICATIONS HOMEWOOD
13 OCTOBER 2000
DES. HARMON
CH.
AC-DC POWER DISTRIBUTION
EFFINGHAM, IL
RICKELMAN AVE
CHA-196.80-20 22
DOT# 289 178A

cha-196.80-22.dgn
24-SEP-2015

REVISIONS

| NO. | DATE | BY | DESCRIPTION | APP. BY |
|---|---|---|---|---|
| 1 | | | | |
| 2 | | | | |
| 3 | | | | |
| 4 | | | | |
| 5 | | | | |

SIEMENS INDUSTRY INC
DES.: BSH DATE: 03/13/14 JOB NO.: JXXE04655
CKD.: MAB ISSUE DATE: N/A EST. NO.: 4DIE000258
DRN.: BSH PLAN NO.: N/A SHEET 22 OF 39
P TIME: 13:46 P DATE: $$PLOT_DATE CAD ID.: CHA-196.80-22

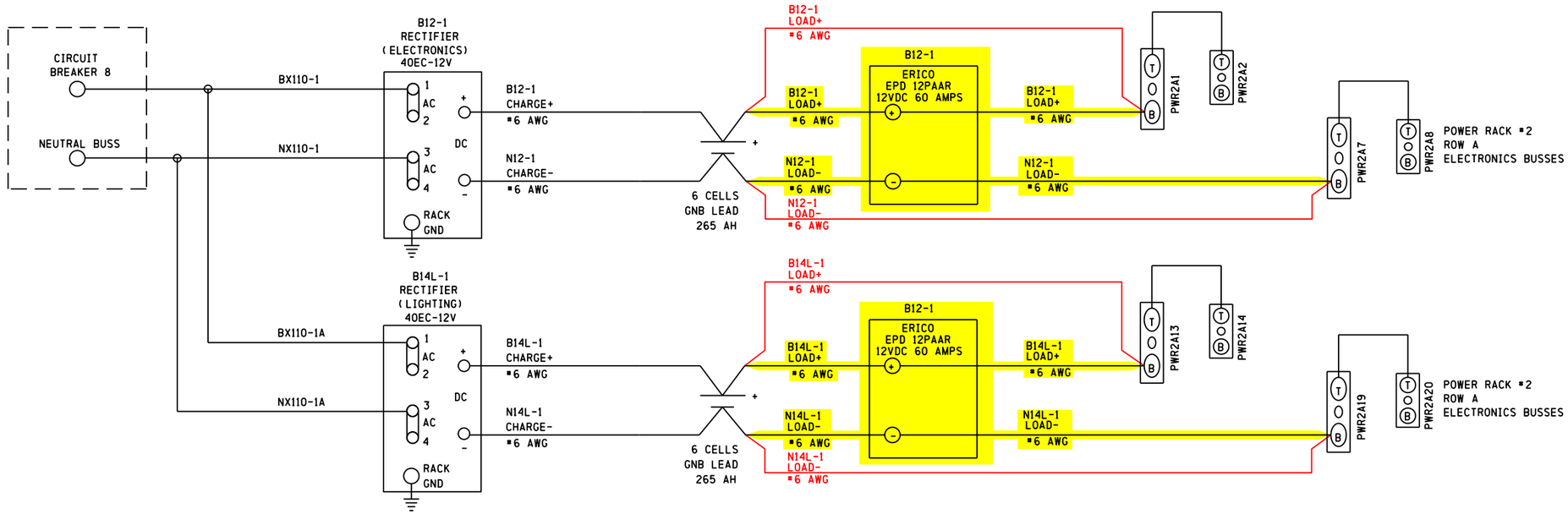


NOTES:
ALL WIRING #10 AWG UNLESS OTHERWISE NOTED.
● =INSULATED NUT

TERMINAL DESIGNATIONS:
HXP1A1 = HXP RACK #1, WAGO STRIP A, TERMINAL 1
SP1A1 = SURGE PANEL RACK #1, COLUMN A, TERMINAL 1
PWR1A1 = POWER RACK #1, WAGO STRIP A, TERMINAL 1

SII 13 MAR 2014

PROPOSED
DESIGN NO. PTC-003
RED-IN YELLOW-OUT

AS INSTALLED
DATE _____
BY _____
(PRINT NAME)

| PROPOSED D | M | Y | REVISIONS | D | C | COMPLETED D | M | Y | C |
|---|---|---|---|---|---|---|---|---|---|
| | | | PLAN REDRAWN | | | 13 | 03 | 14 | MAB |
| 13 | 03 | 14 | PTC UPGRADE | BSH | MAB | | | | |

REGION SOUTHERN
SUB. CHAMPAIGN 341
SIGNALS AND COMMUNICATIONS HOMEWOOD
DES. HARMON
13 OCTOBER 2000
CH.
DC POWER DISTRIBUTION
EFFINGHAM, IL
RICKELMAN AVE
CHA-196.80-21 23
DOT# 289 178A

cha-196.80-23.dgn
24-SEP-2015

REVISIONS

| NO. | DATE | BY | DESCRIPTION | APP. BY |
|---|---|---|---|---|
| 1 | | | | |
| 2 | | | | |
| 3 | | | | |
| 4 | | | | |
| 5 | | | | |

SIEMENS INDUSTRY INC

| | | | |
|---|---|---|---|
| DES.: BSH | DATE: 03/13/14 | JOB NO.: UXXE04655 | |
| CKD.: MAB | ISSUE DATE: N/A | EST. NO.: QDE000258 | |
| DRN.: BSH | PLAN NO.: N/A | SHEET 23 OF 39 | |
| P TIME: 13:46 | P DATE: $$PLOT_DATE | CAD ID.: CHA-196.80-23 | |

cha-196.80-24.dgn
24-SEP-2015

TERMINAL BOARD RACK 2

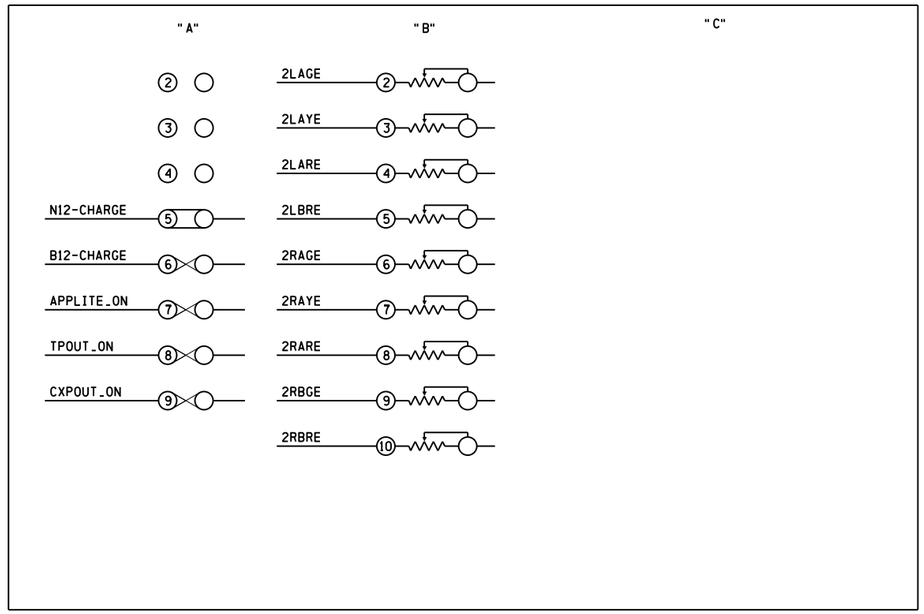


16" X 24"

= TEST LINK - GOLD NUT ON FILLED SIDE

| REVISIONS | | | | |
|---|---|---|---|---|
| NO. | DATE | BY | DESCRIPTION | APP. BY |
| 1 | | | | |
| 2 | | | | |
| 3 | | | | |
| 4 | | | | |
| 5 | | | | |

SIEMENS INDUSTRY INC

| | | | |
|---|---|---|---|
| DES.: BSH | DATE: 03/13/14 | JOB NO.: JXXE04655 | |
| CKD.: MAB | ISSUE DATE: N/A | EST. NO.: 0DE000258 | |
| DRN.: BSH | PLAN NO.: N/A | SHEET 24 OF 39 | |
| P TIME: 13:46 | P DATE: $$PLOT_DATE | CAD ID.: CHA-196.80-24 | |

SII 13 MAR 2014

PROPOSED
DESIGN NO. PTC-003
RED-IN YELLOW-OUT

AS INSTALLED
DATE _____
BY _____
(PRINT NAME)

| PROPOSED D | PROPOSED M | PROPOSED Y | REVISIONS | D | C | COMPLETED D | COMPLETED M | COMPLETED Y | C |
|---|---|---|---|---|---|---|---|---|---|
| | | | PLAN REDRAWN | | | 13 | 03 | 14 | MAB |
| 13 | 03 | 14 | PTC UPGRADE | BSH | MAB | | | | |

REGION SOUTHERN
SUB. CHAMPAIGN 341

SIGNALS AND COMMUNICATIONS HOMEWOOD
13 OCTOBER 2000
DES. HARMON
CH.

TERMINAL BOARD DETAILS
RACK 2
EFFINGHAM, IL
RICKELMAN AVE

CHA-196.80-22 24

DOT# 289 178A

VHLC RACK 1 - ROW A

Vital General Purpose I/O - HLC Slot 4 Terminations

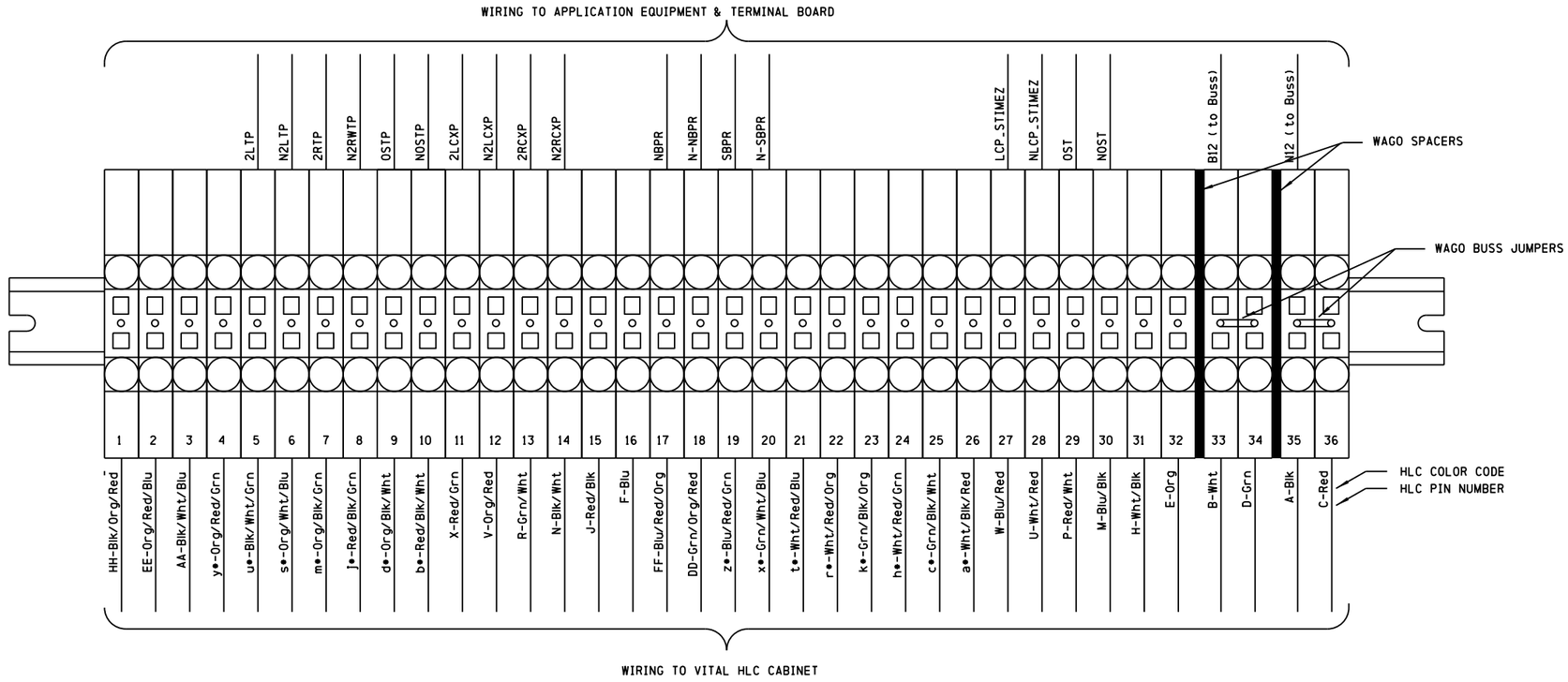


| REVISIONS | | | | |
|---|---|---|---|---|
| NO. | DATE | BY | DESCRIPTION | APP. BY |
| 1 | | | | |
| 2 | | | | |
| 3 | | | | |
| 4 | | | | |
| 5 | | | | |

cha-196.80-25.dgn
24-SEP-2015

SIEMENS INDUSTRY INC

| | | | |
|---|---|---|---|
| DES.: BSH | DATE: 03/13/14 | JOB NO.: JXXE04655 | |
| CKD.: MAB | ISSUE DATE: N/A | EST. NO.: 1QDE000258 | |
| DRN.: BSH | PLAN NO.: N/A | SHEET 25 OF 39 | |
| P TIME: 13:46 | P DATE: $$PLOT_DATE | CAD ID.: CHA-196.80-25 | |

SII 13 MAR 2014

PROPOSED
DESIGN NO. PTC-003
RED-IN YELLOW-OUT

AS INSTALLED
DATE _____
BY _____
(PRINT NAME)

| PROPOSED D | PROPOSED M | PROPOSED Y | REVISIONS | D | C | COMPLETED D | COMPLETED M | COMPLETED Y | C |
|---|---|---|---|---|---|---|---|---|---|
| | | | PLAN REDRAWN | | | 13 | 03 | 14 | MAB |
| 13 | 03 | 14 | PTC UPGRADE | BSH | MAB | | | | |

REGION SOUTHERN
SUB. CHAMPAIGN 341

SIGNALS AND COMMUNICATIONS HOMEWOOD
13 OCTOBER 2000
DES. HARMON
CH.

TERMINAL BOARD DETAILS
RACK 1 ROW A
EFFINGHAM, IL
RICKELMAN AVE

CHA-196.80-23 25

DOT# 289 178A

VHLC RACK 1 - ROW B

Vital Signal Driver - HLC SLOT 5 TERMINATIONS

WIRING TO APPLICATION EQUIPMENT & TERMINAL BOARD

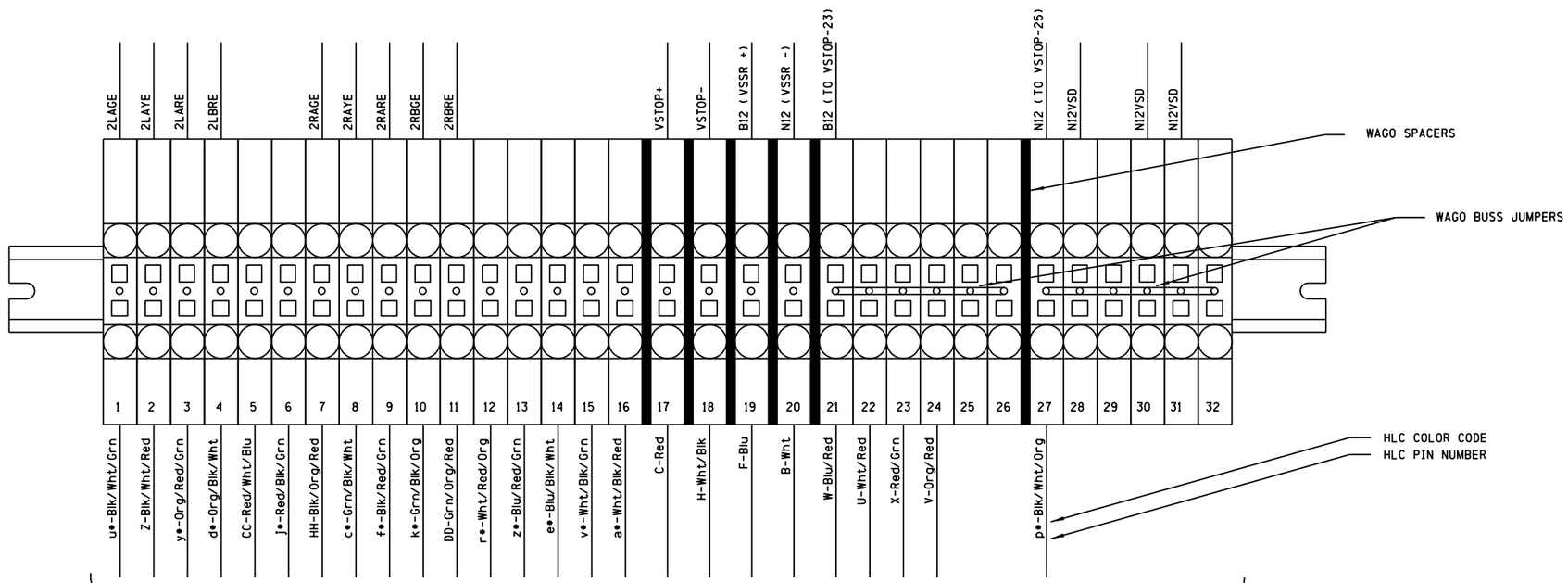


WIRING TO VITAL HLC CABINET

cha-196.80-26.dgn
24-SEP-2015

| REVISIONS | | | | |
|---|---|---|---|---|
| NO. | DATE | BY | DESCRIPTION | APP. BY |
| 1 | | | | |
| 2 | | | | |
| 3 | | | | |
| 4 | | | | |
| 5 | | | | |

SIEMENS INDUSTRY INC

| | | | |
|---|---|---|---|
| DES.: BSH | DATE: 03/13/14 | JOB NO.: JXXE04655 | |
| CKD.: MAB | ISSUE DATE: N/A | EST. NO.: 4DE000258 | |
| DRN.: BSH | PLAN NO.: N/A | SHEET 26 OF 39 | |
| P TIME: 13:46 | P DATE: $$PLOT_DATE | CAD ID.: CHA-196.80-26 | |

SII 13 MAR 2014

PROPOSED

DESIGN NO. PTC-003

RED-IN YELLOW-OUT

AS INSTALLED

DATE _____

BY _____

(PRINT NAME)

| PROPOSED D | PROPOSED M | PROPOSED Y | REVISIONS | D | C | COMPLETED D | COMPLETED M | COMPLETED Y | C |
|---|---|---|---|---|---|---|---|---|---|
| | | | PLAN REDRAWN | | | 13 | 03 | 14 | MAB |
| 13 | 03 | 14 | PTC UPGRADE | BSH | MAB | | | | |

REGION SOUTHERN

SUB. CHAMPAIGN 341

CN

SIGNALS AND COMMUNICATIONS HOMEWOOD

DES. HARMON

13 OCTOBER 2000

CH.

WAGO TERMINAL DETAILS
RACK 1 ROW B
EFFINGHAM, IL

RICKELMAN AVE

CHA-196.80-24

26

DOT# 289 178A

VHLC RACK 1 - ROW C

Non-Vital I/O - HLC SLOT 6 Terminations

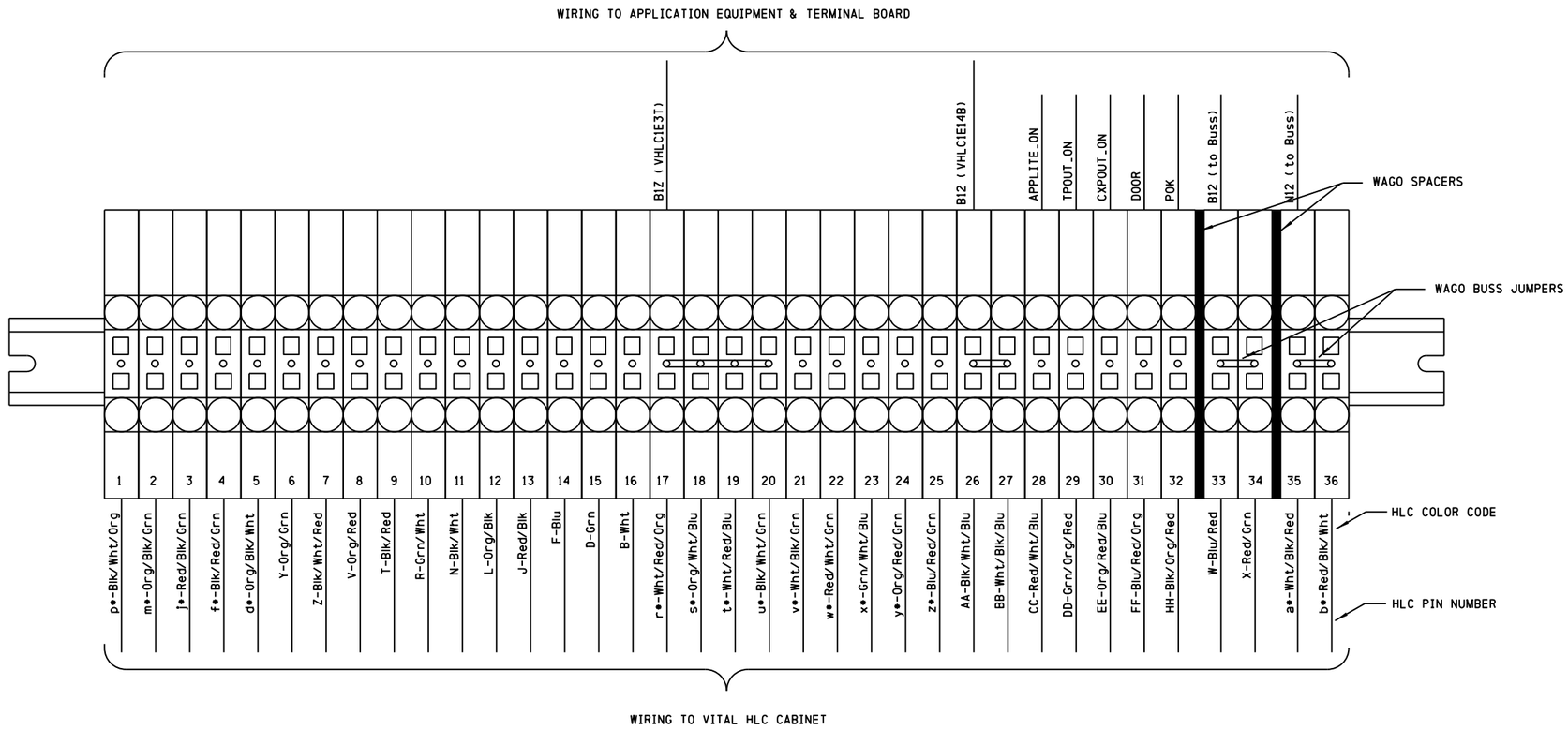


cha-196.80-27.dgn
24-SEP-2015

| REVISIONS | | | | |
|---|---|---|---|---|
| NO. | DATE | BY | DESCRIPTION | APP. BY |
| 1 | | | | |
| 2 | | | | |
| 3 | | | | |
| 4 | | | | |
| 5 | | | | |

SIEMENS INDUSTRY INC

| | | | |
|---|---|---|---|
| DES.: BSH | DATE: 03/13/14 | JOB NO.: JXXE04655 | |
| CKD.: MAB | ISSUE DATE: N/A | EST. NO.: 1QDE000258 | |
| DRN.: BSH | PLAN NO.: N/A | SHEET 27 OF 39 | |
| P TIME: 13:46 | P DATE: $$PLOT_DATE | CAD ID.: CHA-196.80-27 | |

SII 13 MAR 2014

PROPOSED

DESIGN NO. PTC-003

RED-IN YELLOW-OUT

AS INSTALLED

DATE _____

BY _____

(PRINT NAME)

| PROPOSED D | PROPOSED M | PROPOSED Y | REVISIONS | D | C | COMPLETED D | COMPLETED M | COMPLETED Y | C |
|---|---|---|---|---|---|---|---|---|---|
| | | | PLAN REDRAWN | | | 13 | 03 | 14 | MAB |
| 13 | 03 | 14 | PTC UPGRADE | BSH | MAB | | | | |

REGION SOUTHERN

SUB. CHAMPAIGN 341

SIGNALS AND COMMUNICATIONS HOMEWOOD

13 OCTOBER 2000

DES. HARMON

CH.

WAGO TERMINAL DETAILS
RACK 1 ROW C
EFFINGHAM, IL

RICKELMAN AVE

CHA-196.80-25

27

DOT# 289 178A

VHLC RACK 1 - ROW E

B12/N12 BUSSES

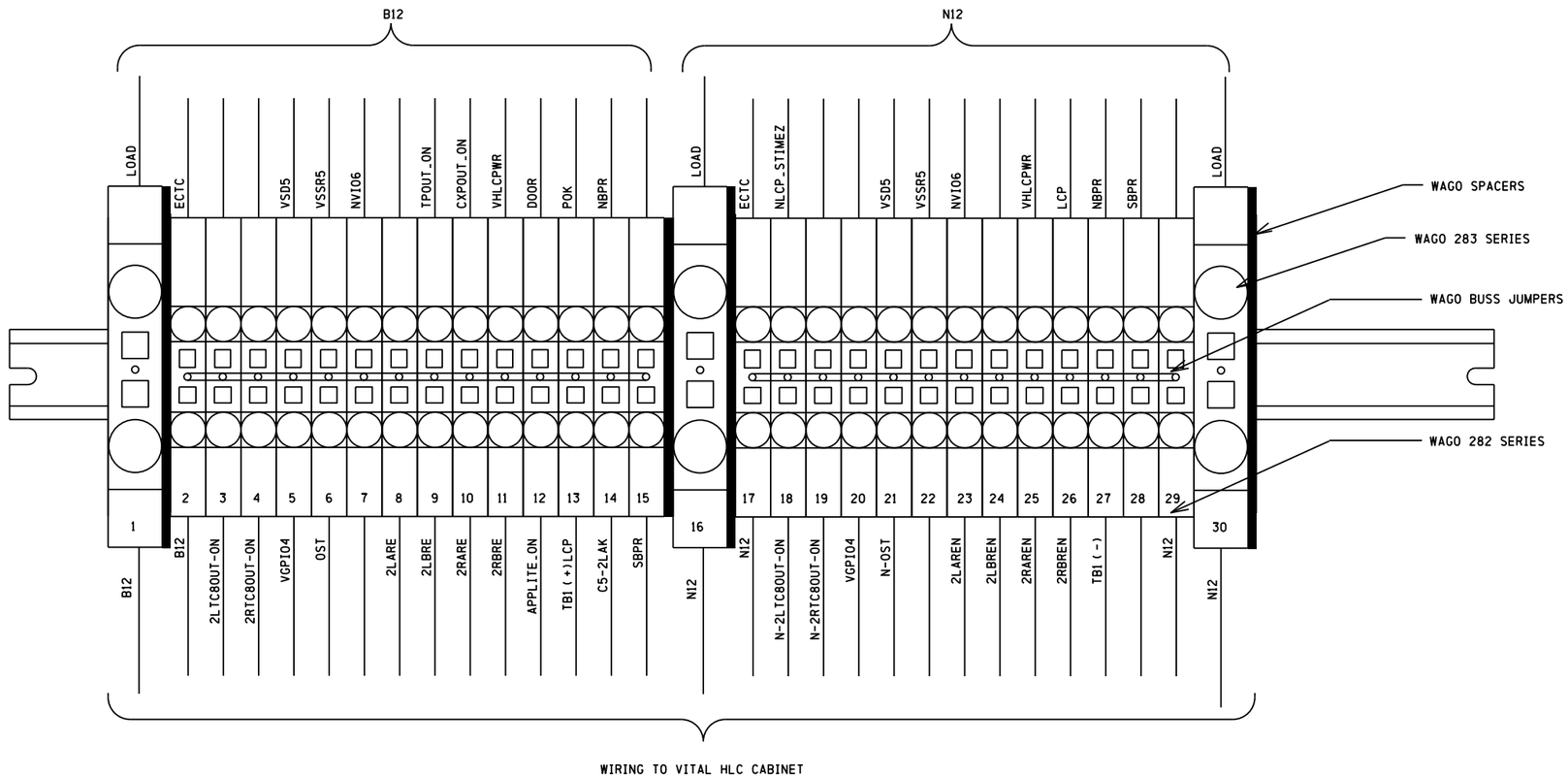


cha-196.80-28.dgn
24-SEP-2015

| REVISIONS | | | | |
|---|---|---|---|---|
| NO. | DATE | BY | DESCRIPTION | APP. BY |
| 1 | | | | |
| 2 | | | | |
| 3 | | | | |
| 4 | | | | |
| 5 | | | | |

SIEMENS INDUSTRY INC

| | | |
|---|---|---|
| DES.: BSH | DATE: 03/13/14 | JOB NO.: JXXE04655 |
| CKD.: MAB | ISSUE DATE: N/A | EST. NO. :1QDE000258 |
| DRN.: BSH | PLAN NO. :N/A | SHEET 28 OF 39 |
| P TIME:13:46 | P DATE: $$PLOT_DATE | CAD ID.: CHA-196.80-28 |

SII 13 MAR 2014

PROPOSED
DESIGN NO. PTC-003
RED-IN YELLOW-OUT

AS INSTALLED
DATE _____
BY _____
(PRINT NAME)

| PROPOSED D | PROPOSED M | PROPOSED Y | REVISIONS | D | C | COMPLETED D | COMPLETED M | COMPLETED Y | C |
|---|---|---|---|---|---|---|---|---|---|
| | | | PLAN REDRAWN | | | 13 | 03 | 14 | MAB |
| 13 | 03 | 14 | PTC UPGRADE | BSH | MAB | | | | |

REGION SOUTHERN
SUB. CHAMPAIGN 341

SIGNALS AND COMMUNICATIONS HOMEWOOD
DES. HARMON
13 OCTOBER 2000
CH.

WAGO TERMINAL DETAILS
RACK 1 ROW E
EFFINGHAM, IL
RICKELMAN AVE

CHA-196.80-26 28

DOT# 289 178A

| REVISIONS | | | | |
|---|---|---|---|---|
| NO. | DATE | BY | DESCRIPTION | APP. BY |
| 1 | | | | |
| 2 | | | | |
| 3 | | | | |
| 4 | | | | |
| 5 | | | | |

HXP RACK 1 - ROW A

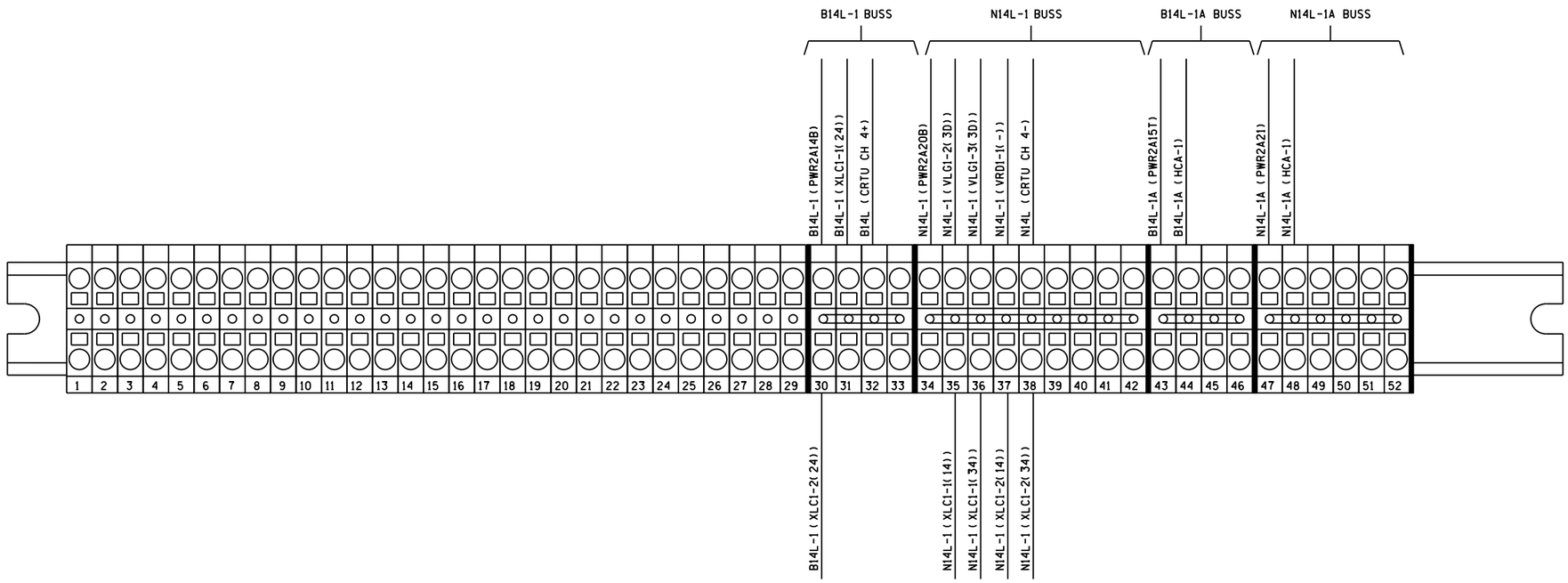


NOTE:

1. WAGO TERMINATION DETAILS ARE SHOWN FOR TROUBLESHOOTING REFERENCE ONLY. CIRCUITS SHOULD BE WIRED FROM THE APPROPRIATE CIRCUIT PLANS.
2. NOMENCLATURE IN PARENTHESES INDICATE THE WIRE DESTINATION.

SII 13 MAR 2014

PROPOSED
DESIGN NO. PTC-003
RED-IN YELLOW-OUT

AS INSTALLED
DATE _____
BY _____
(PRINT NAME)

| PROPOSED D | PROPOSED M | PROPOSED Y | REVISIONS | D | C | COMPLETED D | COMPLETED M | COMPLETED Y | C |
|---|---|---|---|---|---|---|---|---|---|
| | | | PLAN REDRAWN | | | 13 | 03 | 14 | MAB |
| 13 | 03 | 14 | PTC UPGRADE | BSH | MAB | | | | |

REGION SOUTHERN
SUB. CHAMPAIGN 341
CN

SIGNALS AND COMMUNICATIONS HOMEWOOD
DES. HARMON
13 OCTOBER 2000
CH.

WAGO TERMINALS -
HXP RACK 1 ROW A
EFFINGHAM, IL
RICKELMAN AVE

CHA-196.80-27 29

DOT# 289 178A

SIEMENS INDUSTRY INC

| | | | |
|---|---|---|---|
| DES.: BSH | DATE: 03/13/14 | JOB NO.: JXXE04655 | |
| CKD.: MAB | ISSUE DATE: N/A | EST. NO.: GDE000258 | |
| DRN.: BSH | PLAN NO.: N/A | SHEET 29 OF 39 | |
| P TIME: 13:46 | P DATE: $$PLOT_DATE | CAD ID.: CHA-196.80-29 | |

cha-196.80-29.dgn
24-SEP-2015

| REVISIONS | | | | |
|---|---|---|---|---|
| NO. | DATE | BY | DESCRIPTION | APP. BY |
| 1 | | | | |
| 2 | | | | |
| 3 | | | | |
| 4 | | | | |
| 5 | | | | |

HXP RACK 1 - ROW B

SIGNAL APPLICATION CIRCUITS

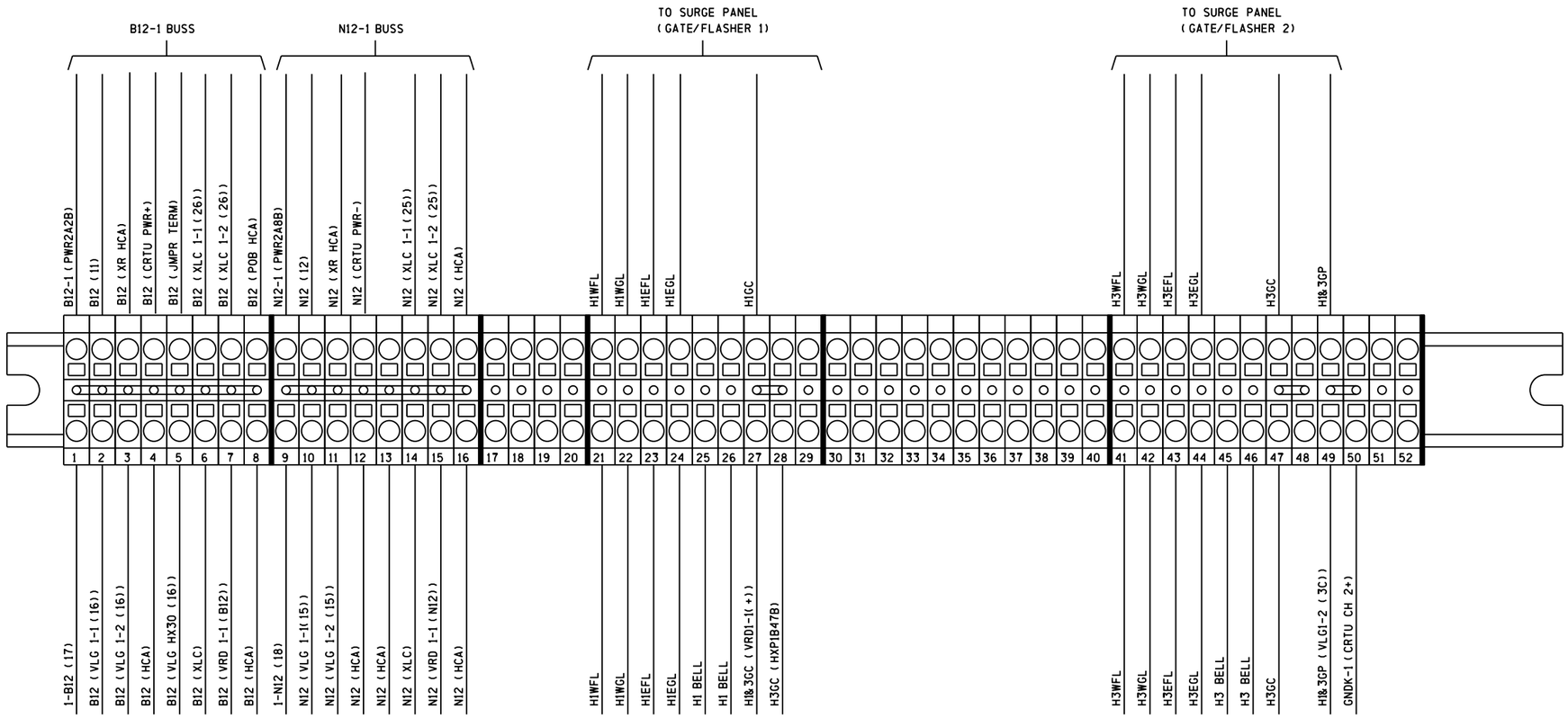


NOTE:

1. WAGO TERMINATION DETAILS ARE SHOWN FOR TROUBLESHOOTING REFERENCE ONLY. CIRCUITS SHOULD BE WIRED FROM THE APPROPRIATE CIRCUIT PLANS.
2. NOMENCLATURE IN PARENTHESES INDICATE THE WIRE DESTINATION.

SII 13 MAR 2014

PROPOSED
DESIGN NO. PTC-003
RED-IN YELLOW-OUT

AS INSTALLED
DATE _____
BY _____
(PRINT NAME)

| PROPOSED D | PROPOSED M | PROPOSED Y | REVISIONS | D | C | COMPLETED D | COMPLETED M | COMPLETED Y | C |
|---|---|---|---|---|---|---|---|---|---|
| | | | PLAN REDRAWN | | | 13 | 03 | 14 | MAB |
| 13 | 03 | 14 | PTC UPGRADE | BSH | MAB | | | | |

REGION SOUTHERN
SUB. CHAMPAIGN 341

SIGNALS AND COMMUNICATIONS HOMEWOOD
13 OCTOBER 2000
DES. HARMON
CH.

WAGO TERMINALS -
HXP RACK 1 ROW B
EFFINGHAM, IL
RICKELMAN AVE

CHA-196.80-28 30

DOT# 289 178A

SIEMENS INDUSTRY INC

| | | |
|---|---|---|
| DES.: BSH | DATE: 03/13/14 | JOB NO.: JXXE04655 |
| CKD.: MAB | ISSUE DATE: N/A | EST. NO.: 0DE000258 |
| DRN.: BSH | PLAN NO.: N/A | SHEET 30 OF 39 |
| P TIME: 13:46 | P DATE: $$PLOT_DATE | CAD ID.: CHA-196.80-30 |

cha-196.80-30.dgn
24-SEP-2015

HXP POWER RACK 2 - ROW A
DC POWER BUSSES

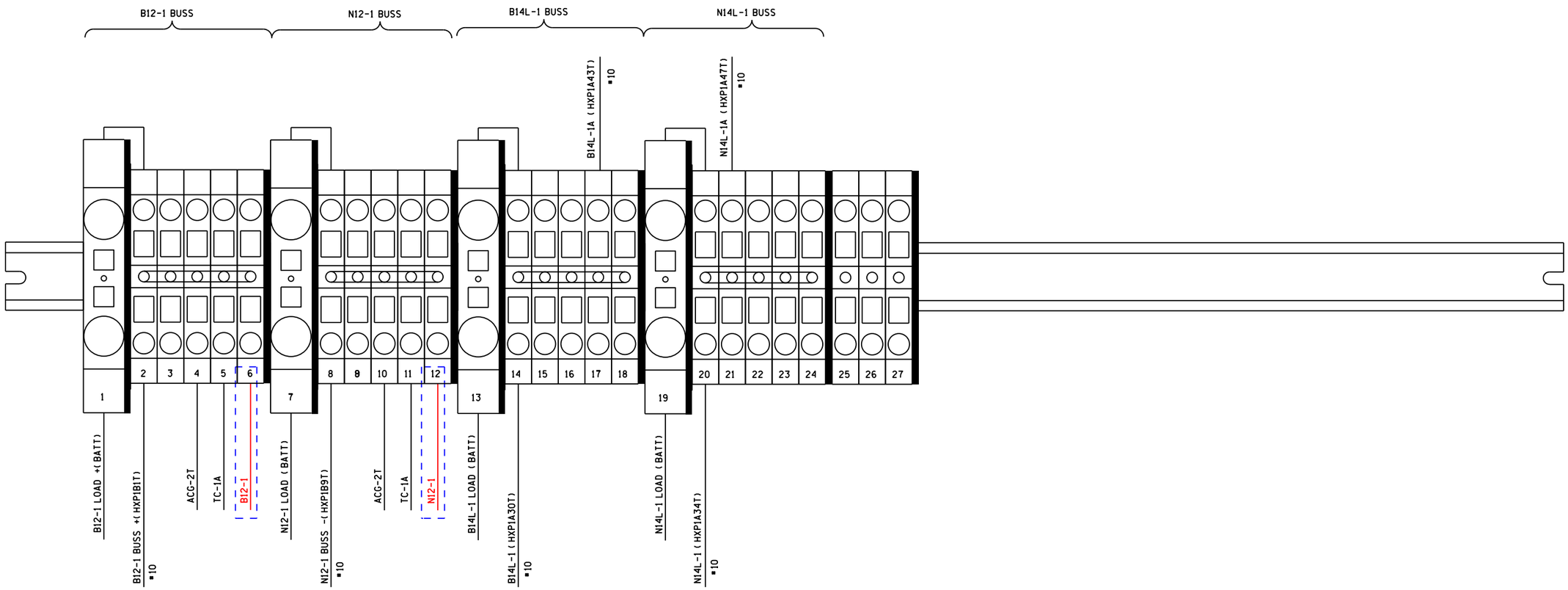


NOTE:

1. WAGO TERMINATION DETAILS ARE SHOWN FOR TROUBLESHOOTING REFERENCE ONLY. CIRCUITS SHOULD BE WIRED FROM THE APPROPRIATE CIRCUIT PLANS.
2. NOMENCLATURE IN PARENTHESES INDICATE THE WIRE DESTINATION.

DENOTES PROPOSAL 15-0213
REVISION 29/07/15

SII 13 MAR 2014

| PROPOSED | PROPOSED |
|---|---|
| DESIGN NO. 15-0213 | DESIGN NO. PTC-003 |
| RED-IN YELLOW-OUT | RED-IN YELLOW-OUT |
| AS INSTALLED | AS INSTALLED |
| DATE _____ | DATE _____ |
| BY _____ (PRINT NAME) | BY _____ (PRINT NAME) |

| PROPOSED D | M | Y | REVISIONS | D | C | COMPLETED D | M | Y | C |
|---|---|---|---|---|---|---|---|---|---|
| | | | PLAN REDRAWN | | | 13 | 03 | 14 | MAB |
| 13 | 03 | 14 | PTC UPGRADE | BSH | MAB | | | | |
| 29 | 07 | 15 | XR RELAY WIRING CHANGE | JBF | TPF | | | | |

REGION SOUTHERN
SUB. CHAMPAIGN 341
SIGNALS AND COMMUNICATIONS HOMEWOOD
DES. HARMON
13 OCTOBER 2000
CH.
WAGO TERMINALS - POWER RACK 2 ROW A
EFFINGHAM, IL
RICKELMAN AVE
CHA-196.80-29 31
DOT# 289 178A

| REVISIONS | | | | |
|---|---|---|---|---|
| NO. | DATE | BY | DESCRIPTION | APP. BY |
| 1 | | | | |
| 2 | | | | |
| 3 | | | | |
| 4 | | | | |
| 5 | | | | |

SIEMENS INDUSTRY INC

| | | | |
|---|---|---|---|
| DES.: BSH | DATE: 03/13/14 | JOB NO.: UXXE04655 | |
| CKD.: MAB | ISSUE DATE: N/A | EST. NO.: GDE000258 | |
| DRN.: BSH | PLAN NO.: N/A | SHEET 31 OF 39 | |
| P TIME: 13:46 | P DATE: $$PLOT_DATE | CAD ID.: CHA-196.80-31 | |

cha-196.80-31.dgn
24-SEP-2015

| REVISIONS | | | | |
|---|---|---|---|---|
| NO. | DATE | BY | DESCRIPTION | APP. BY |
| 1 | | | | |
| 2 | | | | |
| 3 | | | | |
| 4 | | | | |
| 5 | | | | |

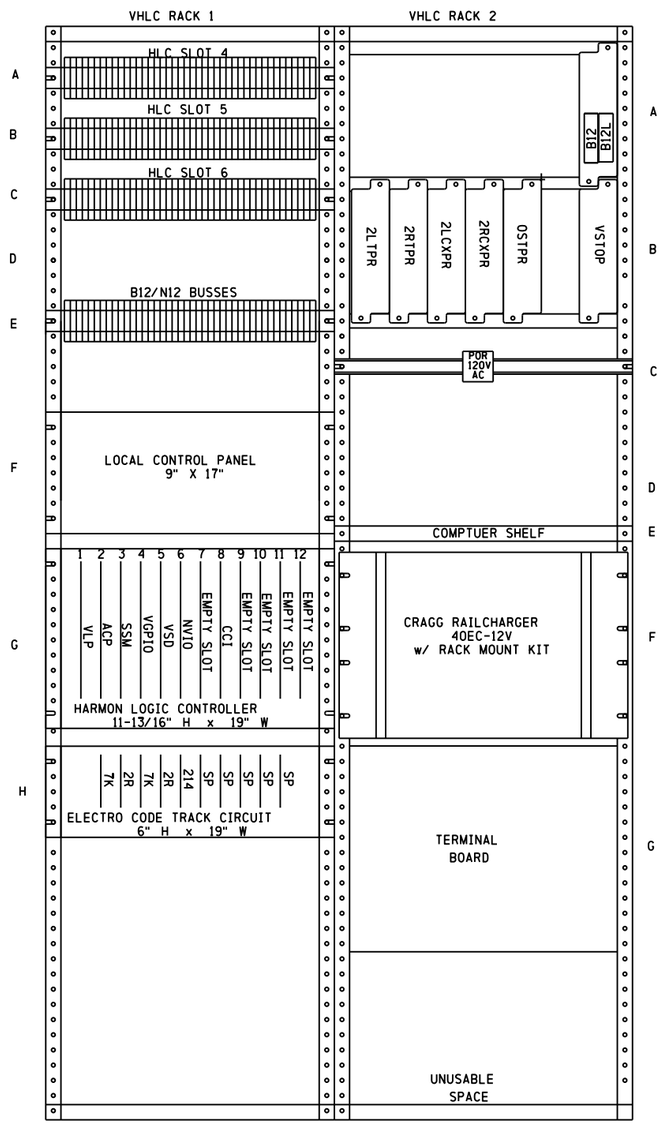


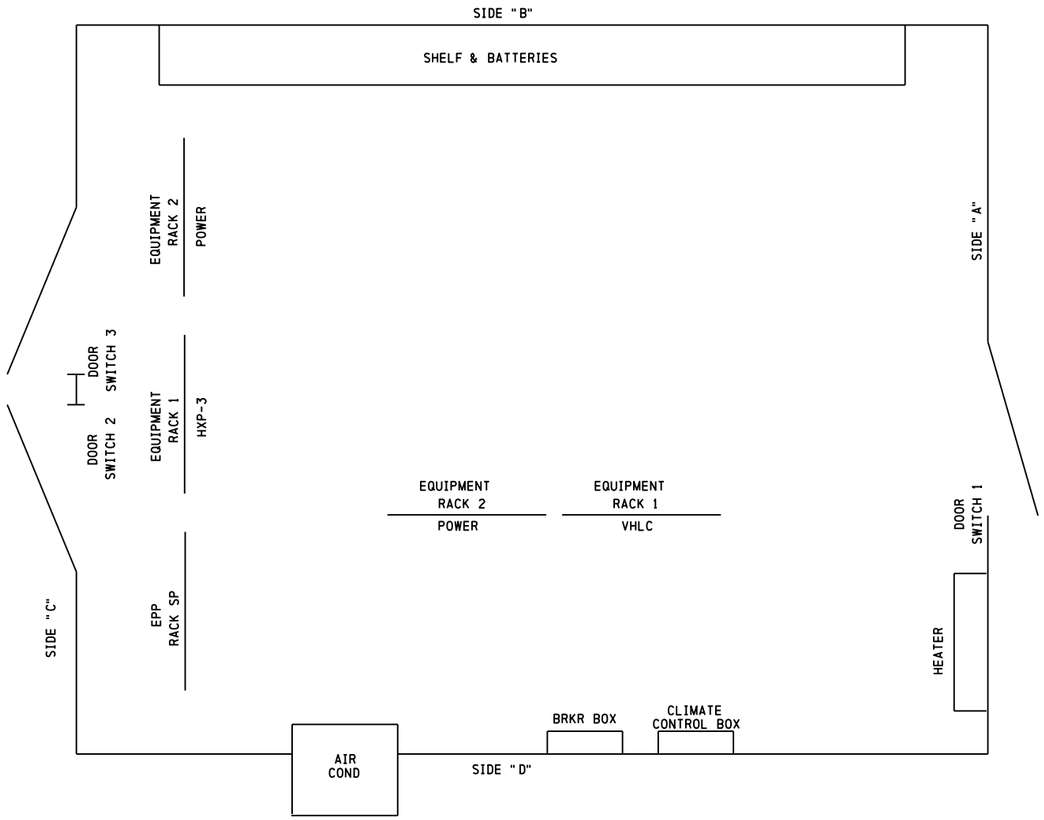


SIII 13 MAR 2014

PROPOSED
DESIGN NO. PTC-003
RED-IN YELLOW-OUT

AS INSTALLED
DATE _____
BY _____
(PRINT NAME)

| PROPOSED D | PROPOSED M | PROPOSED Y | REVISIONS | D | C | COMPLETED D | COMPLETED M | COMPLETED Y | C |
|---|---|---|---|---|---|---|---|---|---|
| | | | PLAN REDRAWN | | | 13 | 03 | 14 | MAB |
| 13 | 03 | 14 | PTC UPGRADE | BSH | MAB | | | | |

REGION SOUTHERN
SUB. CHAMPAIGN 341

SIGNALS AND COMMUNICATIONS HOMEWOOD
13 OCTOBER 2000

DES. HARMON
CH.

VHLC RACKS 1 & 2
& BUNGALOW DETAIL
EFFINGHAM, IL
RICKELMAN AVE

CHA-196.80-30 32

DOT# 289 178A

SIEMENS INDUSTRY INC

| | | | |
|---|---|---|---|
| DES.: BSH | DATE: 03/13/14 | JOB NO.: UXXE04655 | |
| CKD.: MAB | ISSUE DATE: N/A | EST. NO.: GDE000258 | |
| DRN.: BSH | PLAN NO.: N/A | SHEET 32 OF 39 | |
| P TIME: 13:46 | P DATE: $$PLOT_DATE | CAD ID.: CHA-196.80-32 | |

cha-196.80-32.dgn
24-SEP-2015

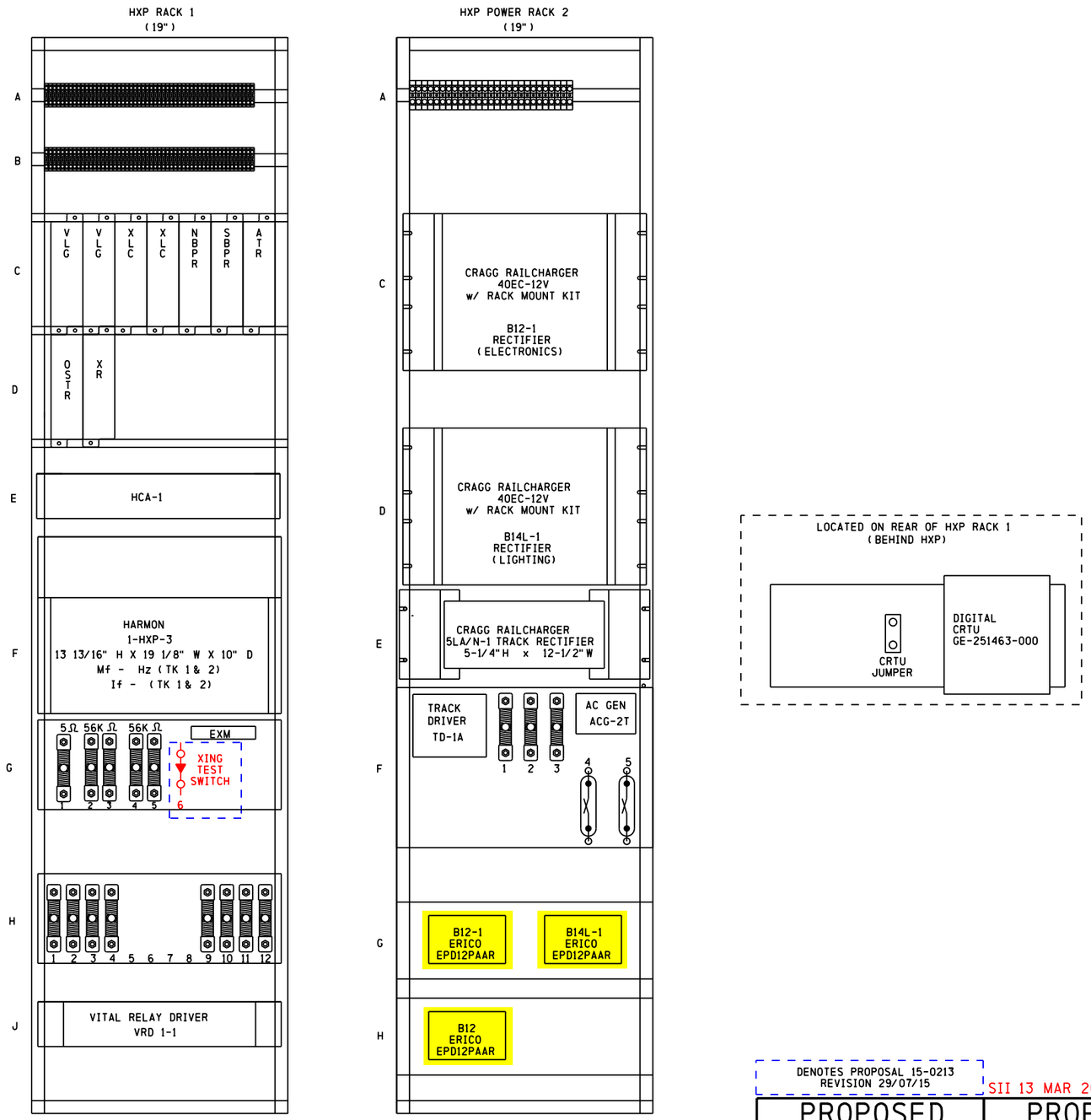


DENOTES PROPOSAL 15-0213
REVISION 29/07/15

SII 13 MAR 2014

| PROPOSED | |
|---|---|
| DESIGN NO. 15-0213 | |
| RED-IN | YELLOW-OUT |
| AS INSTALLED | |
| DATE | |
| BY | (PRINT NAME) |

| PROPOSED | |
|---|---|
| DESIGN NO. PTC-003 | |
| RED-IN | YELLOW-OUT |
| AS INSTALLED | |
| DATE | |
| BY | (PRINT NAME) |

| PROPOSED D | M | Y | REVISIONS | D | C | COMPLETED D | M | Y | C |
|---|---|---|---|---|---|---|---|---|---|
| | | | PLAN REDRAWN | | | 13 | 03 | 14 | MAB |
| 13 | 03 | 14 | PTC UPGRADE | BSH | MAB | | | | |
| 29 | 07 | 15 | XR RELAY WIRING CHANGE | JBF | TPF | | | | |

REGION SOUTHERN
SUB. CHAMPAIGN 341
CN

SIGNALS AND COMMUNICATIONS HOMEWOOD
DES. HARMON
13 OCTOBER 2000
CH.

HXP RACKS 1 & 2 DETAIL
TRACK CONNECTIONS
EFFINGHAM, IL
RICKELMAN AVE

CHA-196.80-31 33

DOT# 289 178A

| REVISIONS | | | | |
|---|---|---|---|---|
| NO. | DATE | BY | DESCRIPTION | APP. BY |
| 1 | | | | |
| 2 | | | | |
| 3 | | | | |
| 4 | | | | |
| 5 | | | | |

SIEMENS INDUSTRY INC

| | | | |
|---|---|---|---|
| DES.: BSH | DATE: 03/13/14 | JOB NO.: JXXE04655 | |
| CKD.: MAB | ISSUE DATE: N/A | EST. NO.: 10DE000258 | |
| DRN.: BSH | PLAN NO.: N/A | SHEET 33 OF 39 | |
| P TIME: 13:46 | P DATE: $$PLOT_DATE | CAD ID.: CHA-196.80-33 | |

cha-196.80-33.dgn
24-SEP-2015

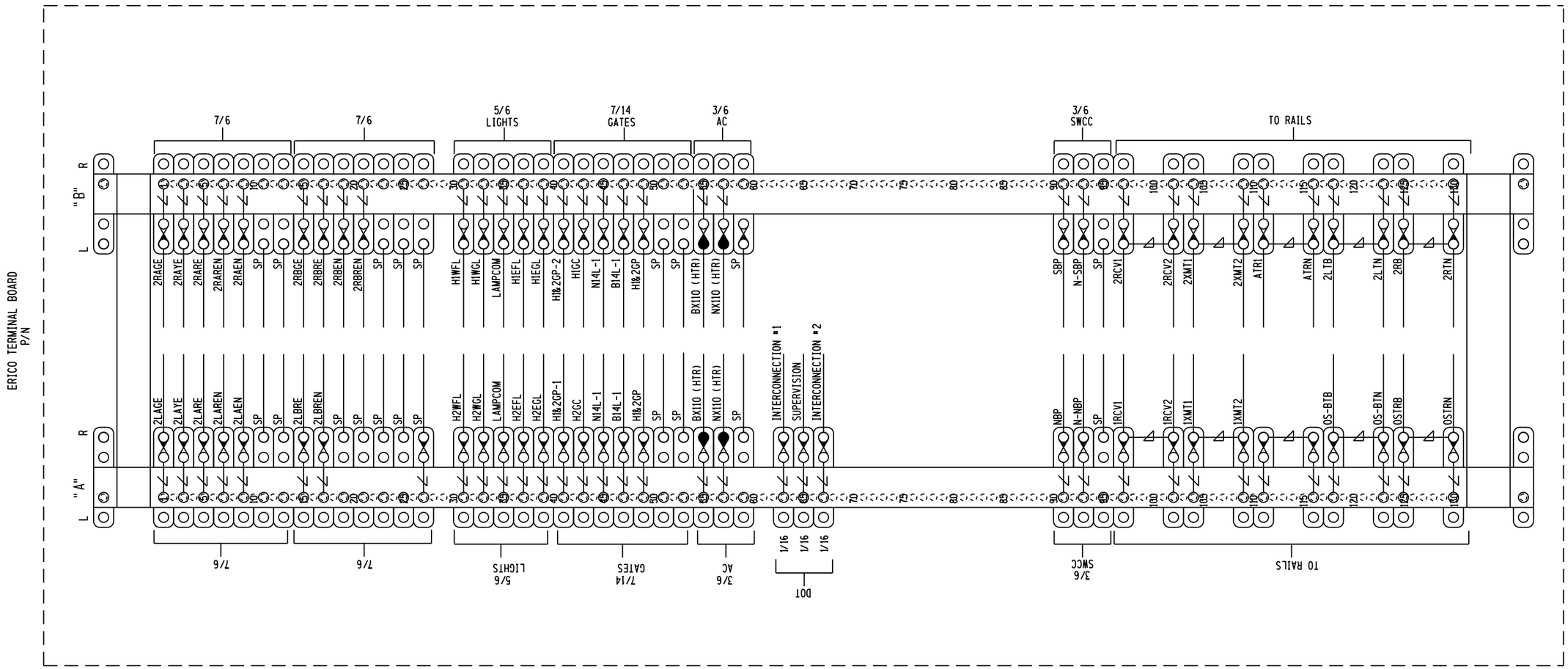


= STRAP & TEST NUT

SIEMENS INDUSTRY INC

| | | |
|---|---|---|
| DES.: BSH | DATE: 03/13/14 | JOB NO.: JXXE04655 |
| CKD.: MAB | ISSUE DATE: N/A | EST. NO.: QDE000258 |
| DRN.: BSH | PLAN NO.: N/A | SHEET 34 OF 39 |
| P TIME: 13:46 | P DATE: $$PLOT_DATE | CAD ID.: CHA-196.80-34 |

REVISIONS

| NO. | DATE | BY | DESCRIPTION | APP. BY |
|---|---|---|---|---|
| 1 | | | | |
| 2 | | | | |
| 3 | | | | |
| 4 | | | | |
| 5 | | | | |

SII 13 MAR 2014

PROPOSED
DESIGN NO. PTC-003
RED-IN YELLOW-OUT

AS INSTALLED
DATE
BY
(PRINT NAME)

| PROPOSED D | M | Y | REVISIONS | D | C | COMPLETED D | M | Y | C |
|---|---|---|---|---|---|---|---|---|---|
| | | | PLAN REDRAWN | | | 13 | 03 | 14 | MAB |
| 13 | 03 | 14 | PTC UPGRADE | BSH | MAB | | | | |

REGION SOUTHERN
SUB. CHAMPAIGN 341

SIGNALS AND COMMUNICATIONS HOMEWOOD
13 OCTOBER 2000
DES. HARMON
CH.

EPP RACK DETAIL
EFFINGHAM, IL
RICKELMAN AVE

CHA-196.80-32 34

DOT# 289 178A

cha-196.80-34.dgn
24-SEP-2015

| REVISIONS | | | | |
|---|---|---|---|---|
| NO. | DATE | BY | DESCRIPTION | APP. BY |
| 1 | | | | |
| 2 | | | | |
| 3 | | | | |
| 4 | | | | |
| 5 | | | | |

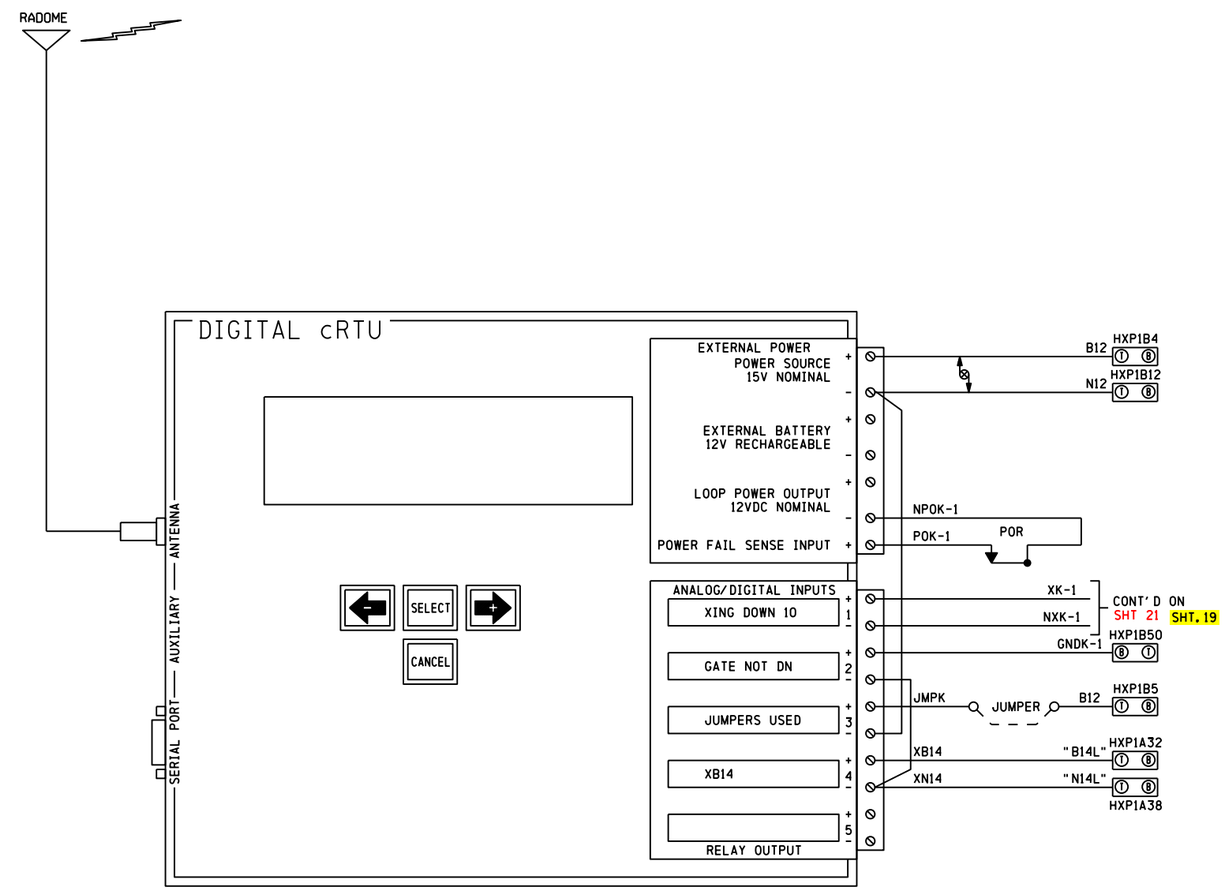


| | |
|---|---|
| CONFIGKEY: | 31 |
| MODEL: | C06C/2ANA V2.3 |
| SERIAL #: | 03-21163-2811 |
| SITE IDENTIFIER: | 289 178A |

| | LOW ALARM | RETURN | HIGH ALARM | RETURN |
|---|---|---|---|---|
| B12 | 11.6 | 12.6 | 15.6 | 14.6 |
| B14 | 13.8 | 14.8 | 17.8 | 16.8 |

NOTES

1) ALL WIRING TO BE #16 AWG MINIMUM UNLESS OTHERWISE NOTED

DENOTES TWISTED PAIR

SIII 13 MAR 2014

PROPOSED

DESIGN NO. PTC-003

RED-IN YELLOW-OUT

AS INSTALLED

DATE _____

BY _____

(PRINT NAME)

| PROPOSED D | PROPOSED M | PROPOSED Y | REVISIONS | D | C | COMPLETED D | COMPLETED M | COMPLETED Y | C |
|---|---|---|---|---|---|---|---|---|---|
| | | | PLAN REDRAWN | | | 13 | 03 | 14 | MAB |
| 13 | 03 | 14 | PTC UPGRADE | BSH | MAB | | | | |

REGION SOUTHERN

SUB. CHAMPAIGN 341

SIGNALS AND COMMUNICATIONS HOMEWOOD

DES. HARMON

13 OCTOBER 2000

CH.

DIGITAL CRTU WIRING

EFFINGHAM, IL

RICKELMAN AVE

CHA-196.80-33 35

DOT# 289 178A 34

SIEMENS INDUSTRY INC

| | | | |
|---|---|---|---|
| DES.: BSH | DATE: 03/13/14 | JOB NO.: JXXE04655 | |
| CKD.: MAB | ISSUE DATE: N/A | EST. NO.: 0DE000258 | |
| DRN.: BSH | PLAN NO.: N/A | SHEET 35 OF 39 | |
| P TIME: 13:46 | P DATE: $$PLOT_DATE | CAD ID.: CHA-196.80-35 | |

cha-196.80-35.dgn
24-SEP-2015

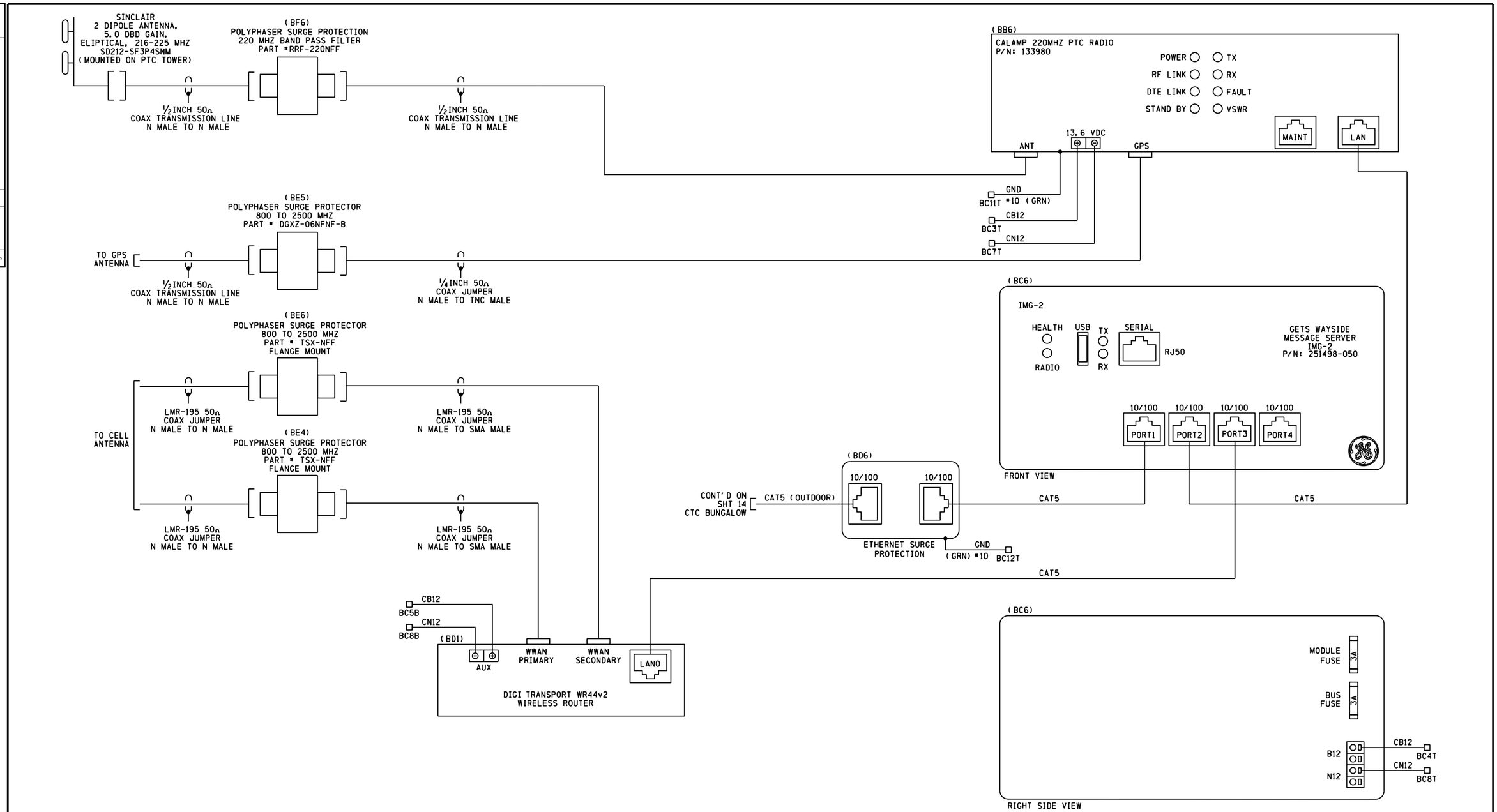


cha-196.80-36.dgn
24-SEP-2015

| REVISIONS | | | | |
|---|---|---|---|---|
| NO. | DATE | BY | DESCRIPTION | APP. BY |
| 1 | | | | |
| 2 | | | | |
| 3 | | | | |
| 4 | | | | |
| 5 | | | | |

SIEMENS INDUSTRY INC

| | | | |
|---|---|---|---|
| DES.: BSH | DATE: 03/13/14 | JOB NO.: JXXE04655 | |
| CKD.: MAB | ISSUE DATE: N/A | EST. NO.: 0DE000258 | |
| DRN.: BSH | PLAN NO.: N/A | SHEET 37 OF 39 | |
| P TIME: 13:46 | P DATE: $$PLOT_DATE | CAD ID.: CHA-196.80-37 | |

FIELD TO CONFIRM ALL PTC
COMM WIRING & DETAILS

TO BE CONFIRMED

CONFIRMED
DATE _____
BY _____
(PRINT NAME)

SII 19 AUG 2014

PROPOSED
DESIGN NO. PTC-003
RED-IN YELLOW-OUT

AS INSTALLED
DATE _____
BY _____
(PRINT NAME)

| PROPOSED D | M | Y | REVISIONS | D | C | COMPLETED D | M | Y | C |
|---|---|---|---|---|---|---|---|---|---|
| | | | | | | | | | |

REGION SOUTHERN
SUB. CHAMPAIGN 341

SIGNALS AND COMMUNICATIONS HOMEWOOD
13 MARCH 2014
DES. BSH
CH. MAB

PTC COMM BUNGALOW
PTC RADIO COMMUNICATION CIRCUITS
EFFINGHAM, IL
RICKELMAN AVE

CHA-196.80-36

DOT# 289 178A

| REVISIONS | | | | |
|---|---|---|---|---|
| NO. | DATE | BY | DESCRIPTION | APP. BY |
| 1 | | | | |
| 2 | | | | |
| 3 | | | | |
| 4 | | | | |
| 5 | | | | |

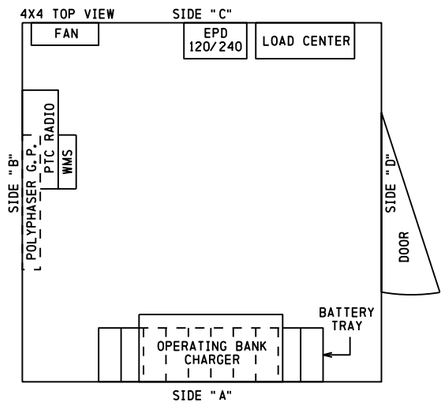


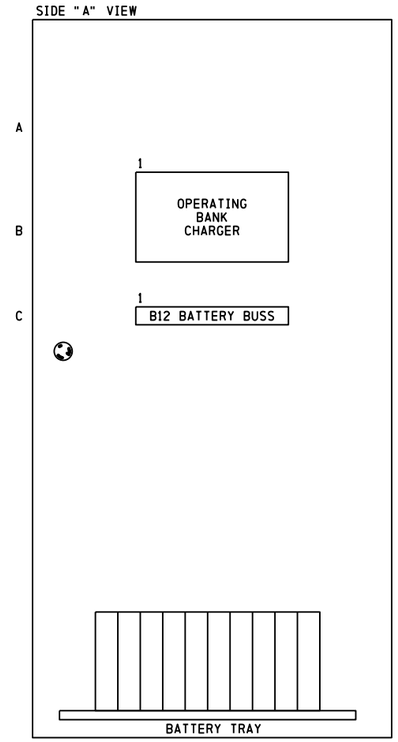


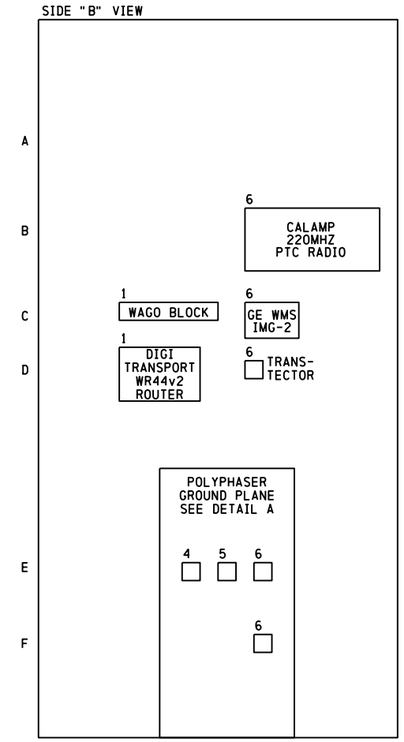


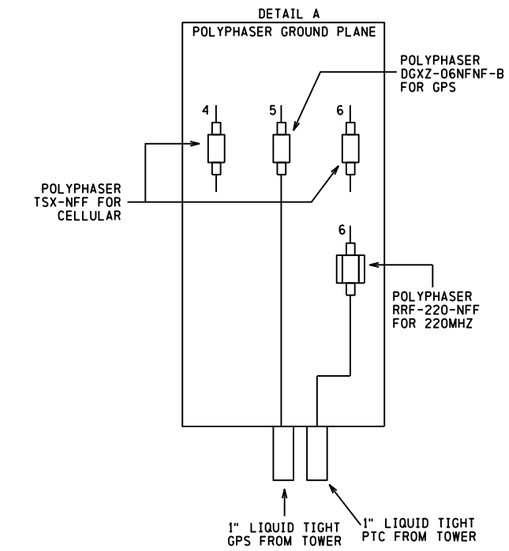


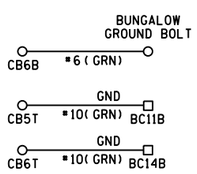


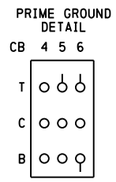


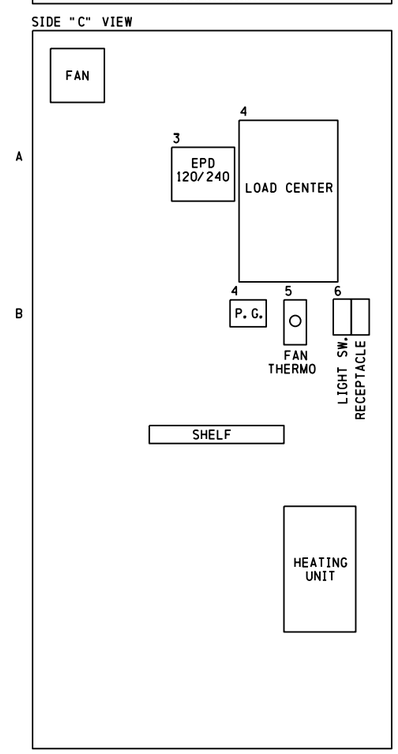


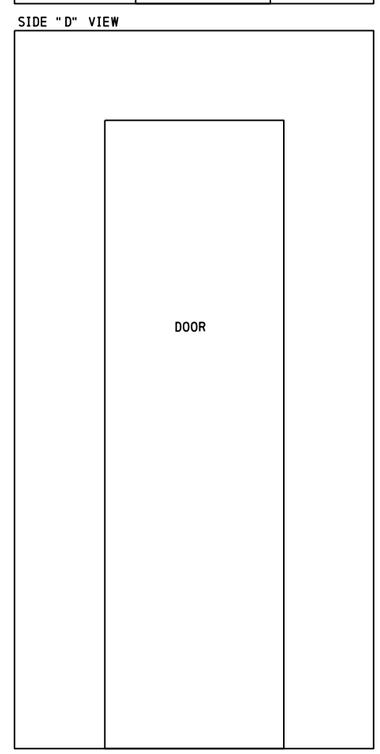


NOTES
1) PLUG HUBBELL HBL 2321 REFER TO PS-906 PG. 6

SII 13 MAR 2014

PROPOSED
DESIGN NO. PTC-003
RED-IN YELLOW-OUT

AS INSTALLED
DATE _____
BY _____
(PRINT NAME)

| PROPOSED | | | REVISIONS | D | C | COMPLETED | | | C |
|---|---|---|---|---|---|---|---|---|---|
| D | M | Y | | | | D | M | Y | |

REGION SOUTHERN
SUB. CHAMPAIGN 341

SIGNALS AND COMMUNICATIONS HOMEWOOD
13 MARCH 2014
DES. BSH
CH. MAB

PTC COMM BUNGALOW
LAYOUT
EFFINGHAM, IL
RICKELMAN AVE

CHA-196.80-37

DOT# 289 178A

SIEMENS INDUSTRY INC

| | | | |
|---|---|---|---|
| DES.: BSH | DATE: 03/13/14 | JOB NO.: UXXE04655 | |
| CKD.: MAB | ISSUE DATE: N/A | EST. NO.: GDE000258 | |
| DRN.: BSH | PLAN NO.: N/A | SHEET 38 OF 39 | |
| P TIME: 13:46 | P DATE: $$PLOT_DATE | CAD ID.: CHA-196.80-38 | |

cha-196.80-37.dgn
24-SEP-2015

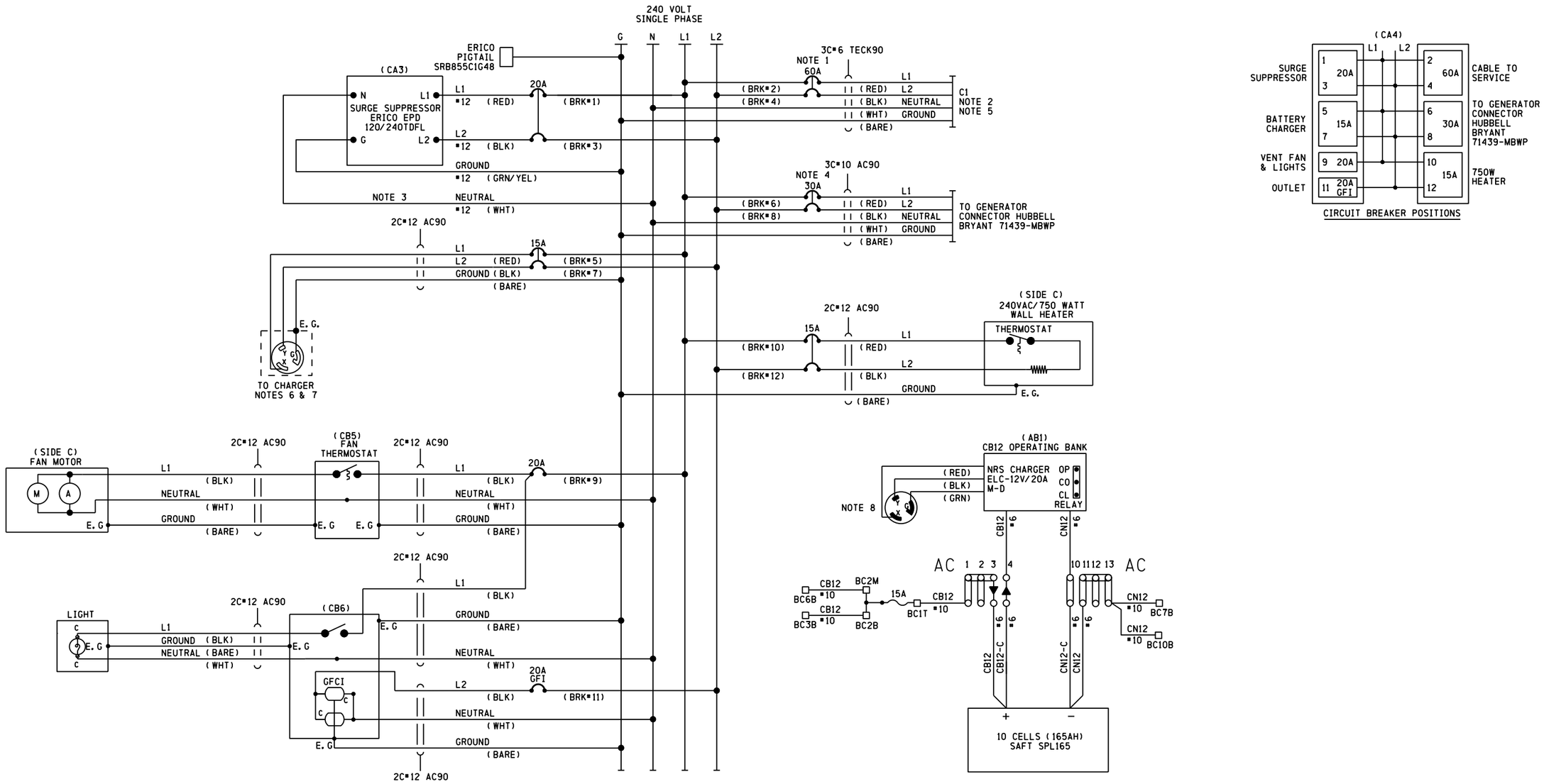


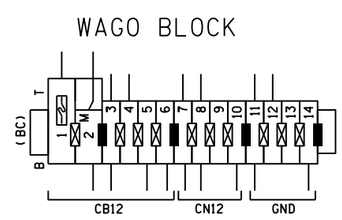


NOTES

1) CIRCUIT BREAKER NOT TO EXCEED 60 AMPERES
RETAINING KIT PK4DTIM4LA MUST BE USED WITH 60A BREAKER
2) FEEDER CIRCUIT BREAKER AT STUB POLE SERVICE PANEL,
NOT TO EXCEED 60 AMPERES
3) KEEP LEADS AS SHORT AS POSSIBLE
4) A TRANSFER SWITCH KIT MUST BE INSTALLED BETWEEN
THE SERVICE DISCONNECT BREAKER AND THE GENERATOR HOOK UP
5) WHERE SEPARATE GROUND WIRE EXISTS BETWEEN THE SERVICE AND THE
LOAD CENTER, REMOVE THE BRASS COLORED BONDING SCREW
(REFER TO SCHEMATIC ON BOX COVER FOR EXACT LOCATION)
6) ENSURE RECTIFIER CONFIGURED FOR 240VAC OPERATION.
GROUND LUG LOCATED ON CHARGER HOUSING.
7) RECEPTACLE HUBBELL HBL 2320 - 20A 250V TWIST LOCK REFER TO PS 906 PG. 6
8) PLUG HUBBELL HBL 2321 REFER TO PS-906 PG. 6

1 WAGO TERMINAL 2 COND. 24-10AWG (WAGO 282-901)
DENOTES WAGO JUMPER CN# 02-45-872 (WAGO 282-402)
DENOTES 15A FUSE
DENOTES WAGO SEPARATOR (WAGO 282-328)
DENOTES WAGO END STOP CN# 02-46-646 (WAGO 282-116)

SII 13 MAR 2014

PROPOSED
DESIGN NO. PTC-003
RED-IN YELLOW-OUT

AS INSTALLED
DATE
BY
(PRINT NAME)

| PROPOSED D | M | Y | REVISIONS | D | C | COMPLETED D | M | Y | C |
|---|---|---|---|---|---|---|---|---|---|
| | | | | | | | | | |

REGION SOUTHERN
SUB. CHAMPAIGN 341

SIGNALS AND COMMUNICATIONS HOMEWOOD
13 MARCH 2014
DES. BSH
CH. MAB

PTC COMM BUNGALOW
POWER DISTRIBUTION
EFFINGHAM, IL
RICKELMAN AVE

CHA-196.80-38

DOT# 289 178A

39

cha-196.80-38.dgn
24-SEP-2015

| REVISIONS | | | | |
|---|---|---|---|---|
| NO. | DATE | BY | DESCRIPTION | APP. BY |
| 1 | | | | |
| 2 | | | | |
| 3 | | | | |
| 4 | | | | |
| 5 | | | | |

SIEMENS INDUSTRY INC

| | | | |
|---|---|---|---|
| DES.: BSH | DATE: 03/13/14 | JOB NO.: JXXE04655 | |
| CKD.: MAB | ISSUE DATE: N/A | EST. NO.: 4DIE000258 | |
| DRN.: BSH | PLAN NO.: N/A | SHEET 39 OF 39 | |
| P TIME: 13:46 | P DATE: $$PLOT_DATE | CAD ID.: CHA-196.80-39 | |