cha-196.80-0.dgn
24-SEP-2015

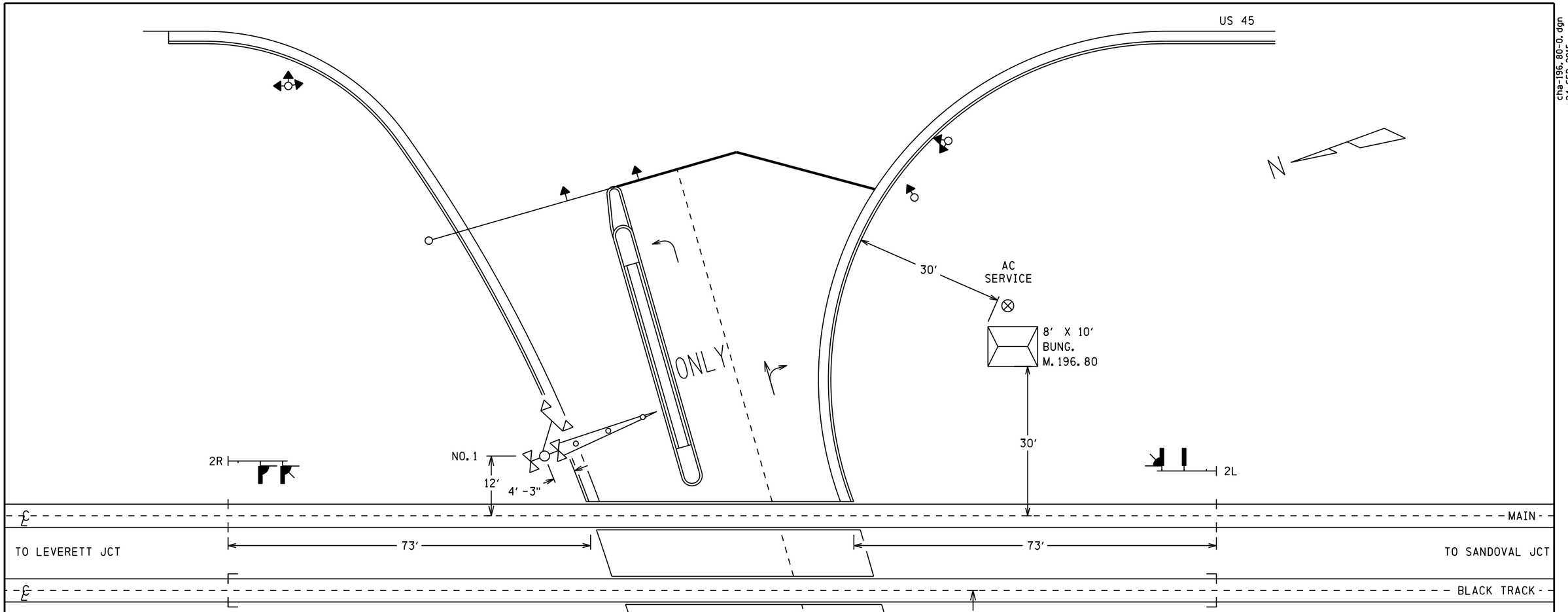

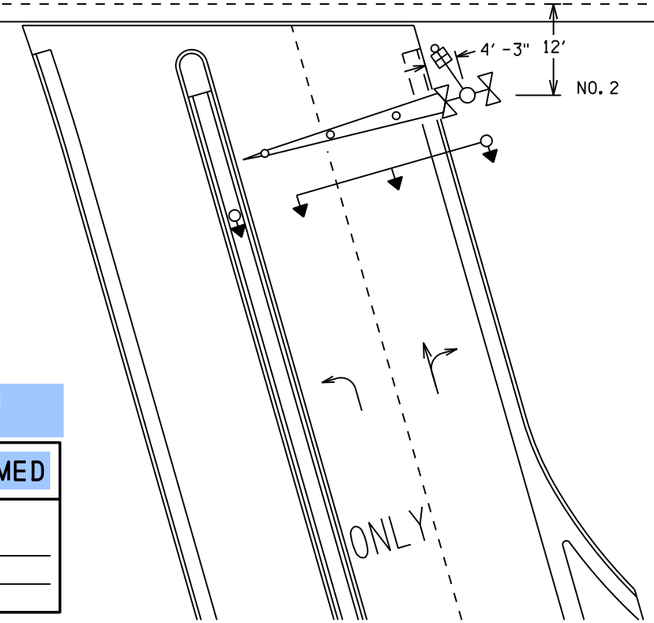

NOTES

1) 79 MPH DESIGN SPEED - MAIN
   10 MPH DESIGN SPEED - BLACK TRACK
2) 45 FEET MAXIMUM CLEARANCE DISTANCE
3) 200 FEET ISLAND DISTANCE - MAIN
   200 FEET ISLAND DISTANCE - BLACK TRACK
4) CONSTANT WARNING CONTROL - MAIN
   ISLAND ONLY CIRCUIT CONTROL - BLACK TRACK
5) APPROACH CIRCUIT DISTANCE PROVIDES FOR:
   1 SEC CLEARANCE TIME
   26 27 SEC PREEMPTION TIME (0 SEC ADVANCE TIME)
   26 27 SEC MINIMUM WARNING TIME
   4 SEC GATE DESCENT DELAY
   5 SEC BUFFER TIME
   5 SEC EQUIPMENT REACTION TIME
6) 24 FEET NO. 1 GATE ARM LENGTH
   30 FEET NO. 2 GATE ARM LENGTH

FIELD TO CONFIRM
ALL DETAILS

TO BE CONFIRMED

CONFIRMED
DATE _____
BY _____
(PRINT NAME)

DENOTES PROPOSAL 15-0213
REVISION 29/07/15

SII 13 MAR 2014

PROPOSED	PROPOSED
DESIGN NO. 15-0213	DESIGN NO. PTC-003
RED-IN YELLOW-OUT	RED-IN YELLOW-OUT
AS INSTALLED	AS INSTALLED
DATE _____	DATE _____
BY _____ (PRINT NAME)	BY _____ (PRINT NAME)

PROPOSED D	PROPOSED M	PROPOSED Y	REVISIONS	D	C	COMPLETED D	COMPLETED M	COMPLETED Y	C
			PLAN REDRAWN			13	03	14	KLT
13	03	14	PTC UPGRADE	BSH	MAB				
29	07	15	XR RELAY WIRING CHANGE	JBF	TPF				

REGION SOUTHERN
SUB. CHAMPAIGN 341

SIGNALS AND COMMUNICATIONS HOMEWOOD
DES. AVS
11 JANUARY 2001
CH.

SITUATION SKETCH
SCALE 1" = 20'
EFFINGHAM, IL

RICKELMAN AVE

CHA-196.80-0

DOT# 289 178A

39

SIEMENS INDUSTRY INC
LOUISVILLE DIVISION, LOUISVILLE, KY

REVISIONS				
NO.	DATE	BY	DESCRIPTION	APP. BY
1				
2				
3				
4				
5				

FLASHING LIGHT UNITS ALIGNMENT TABLE

PRIMARY FRONT LIGHTS FOR VEHICLES							
SIG #	LIGHT #	ROUNDEL		ROAD SPEED	MINIMUM DISTANCE	RECOMMENDED DISTANCE	ALIGNMENT DISTANCE
		SIZE	TYPE	MPH	FT	FT	FT
1	1,2	12"	LED	30	270	450	
2	7,8	12"	LED	30	270	450	
INTERMEDIATE FRONT LIGHTS FOR VEHICLES							
SIG #	LIGHT #	ROUNDEL		ROAD SPEED	MINIMUM DISTANCE	RECOMMENDED DISTANCE	ALIGNMENT DISTANCE
		SIZE	TYPE	MPH	FT	FT	FT
1	15,16	12"	LED				
BACK LIGHTS FOR VEHICLES							
SIG #	LIGHT #	ROUNDEL		ROAD SPEED	MINIMUM DISTANCE	RECOMMENDED DISTANCE	ALIGNMENT DISTANCE
		SIZE	TYPE	MPH	FT	FT	FT
1	3,4	12"	LED	N/A	N/A	N/A	50
2	5,6	12"	LED	N/A	N/A	N/A	50

NOTE
FIELD IS TO PROVIDE THE ACTUAL ALIGNMENT DISTANCE AS DETERMINED BY
SCP-706: ROAD CROSSING DEVICE LIGHT UNIT ALIGNMENT PROCEDURES

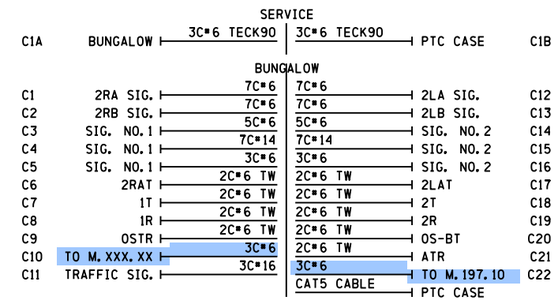

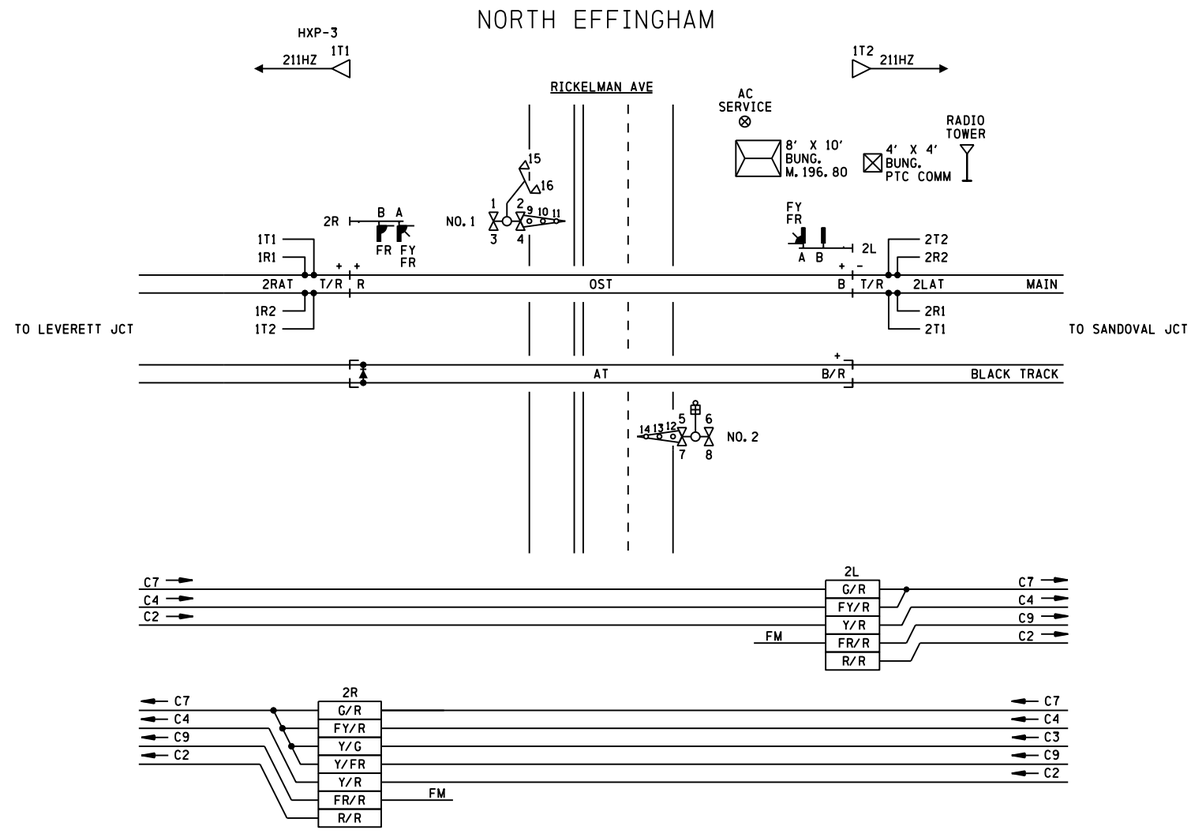

PTC RULES AND VALUES: CHA-196.80-VHLC

PTC LIB. RULE ID	USOR RULE NAME	USOR RULE #	PTC VALUE
1	CLEAR	803	3
2	ADVANCE APPROACH	804	7
3	APPROACH	805	8
5-6	APPROACH RESTRICTING	806	13
25-30	RESTRICTING	814	14
34	STOP	816	15
92	DARK		30

CONTENT	SHEET NO.
SITUATION SKETCH	0
INDEX, TRACK LAYOUT, R&A, & PTC CHART	01
TRACK & SIGNAL PLAN TRACK CONNECTIONS	02
VHLC-I/O SLOT 4 VITAL GENERAL PURPOSE I/O CARD	03
VHLC-I/O SLOT 5 VITAL SIGNAL DRIVER MODULE	04
VHLC-I/O SLOT 6 NON-VITAL I/O MODULE	05
LINE CIRCUITS	06
VHLC CABINET CONFIGURATION	07
VHLC PTC WIU SOFTWARE CONFIGURATION	08
VHLC INTERCONNECTIONS	09
LOCAL CONTROL PANEL	10
CLCP EQUIPMENT DETAIL	11
CLCP CIRCIUTS	12
CLCP CIRCIUTS	13
VITAL LOGIC CONTROLLER SOFTWARE CONFIGURATION & JUMPERS	14
HXP-3 CABINET	15
HXP-3 APPLICATION INFO.	16
VITAL LOGIC GATES	17
FLASHER CONTROL CIRCUITS	18
GATE CONTROL CKTS.	19
INTERNAL GATE MECHANISM CIRCUITS	20
RECORDER INTERFACE	21
AC-DC POWER DISTRIBUTION	22
DC POWER DISTRIBUTION	23
TERMINAL BOARD DETAILS RACK 2	24
TERMINAL BOARD DETAILS RACK 1 ROW A	25
WAGO TERMINAL DETAILS RACK 1 ROW B	26
WAGO TERMINAL DETAILS RACK 1 ROW C	27
WAGO TERMINAL DETAILS RACK 1 ROW E	28
WAGO TERMINALS - HXP RACK 1 ROW A	29
WAGO TERMINALS - HXP RACK 1 ROW B	30
WAGO TERMINALS - POWER RACK 2 ROW A	31
VHLC RACKS 1 & 2 & BUNGALOW DETAIL	32
HXP RACKS 1 & 2 DETAIL	33
EPP RACK DETAIL	34
DIGITAL CRTU WIRING	35
PTC COMM BUNGALOW PTC RADIO COMMUNICATION CIRCUITS	36
PTC COMM BUNGALOW LAYOUT	37
PTC COMM BUNGALOW POWER DISTRIBUTION	38

cha-196.80-01.dgn
24-SEP-2015

FIELD TO CONFIRM MILEPOST AND TYPE OF CABLE USED FOR SBP & NBP RELAYS

TO BE CONFIRMED

CONFIRMED
DATE
BY
(PRINT NAME)

SII 13 MAR 2014

PROPOSED
DESIGN NO. PTC-003
RED-IN YELLOW-OUT

AS INSTALLED
DATE
BY
(PRINT NAME)

PROPOSED			REVISIONS	D	C	COMPLETED			C
D	M	Y				D	M	Y	

REGION SOUTHERN
SUB. CHAMPAIGN 341

SIGNALS AND COMMUNICATIONS HOMEWOOD
13 MARCH 2014
DES. BSH
CH. MAB

INDEX, TRACK LAYOUT, R&A, & PTC CHART
EFFINGHAM, IL
RICKELMAN AVE

CHA-196.80-01

DOT# 289 178A

SIEMENS INDUSTRY INC

DES.: BSH	DATE: 03/13/14	JOB NO.: JXXE04655	
CKD.: MAB	ISSUE DATE: N/A	EST. NO.: 1QDE000258	
DRN.: BSH	PLAN NO.: N/A	SHEET 1 OF 39	
P TIME: 13:45	P DATE: $$PLOT_DATE	CAD ID.: CHA-196.80-01	

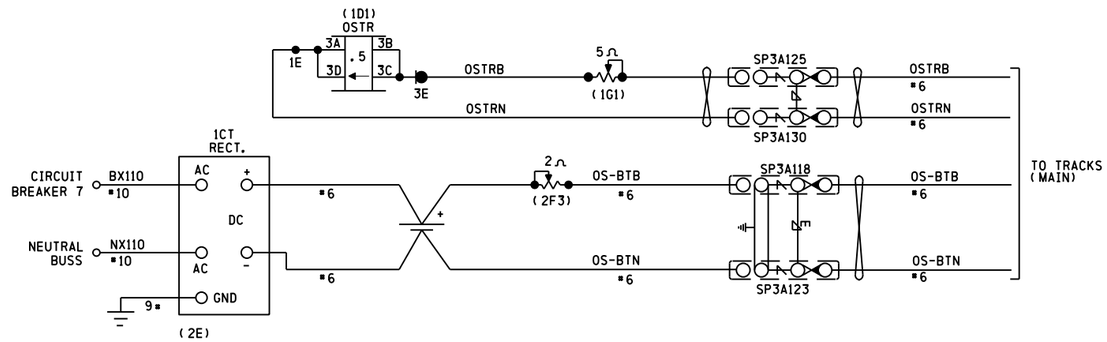

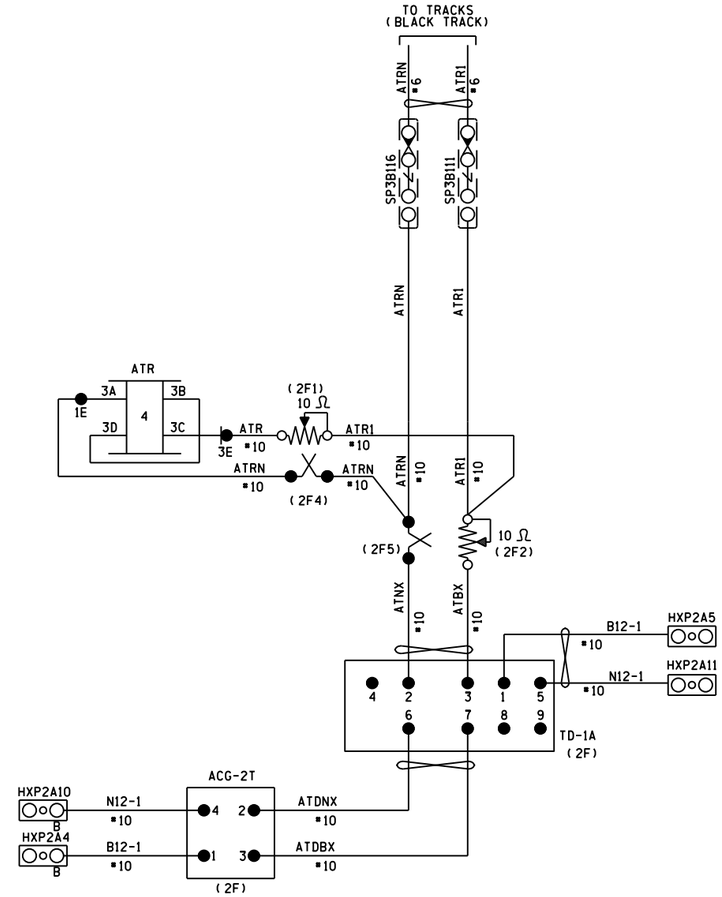

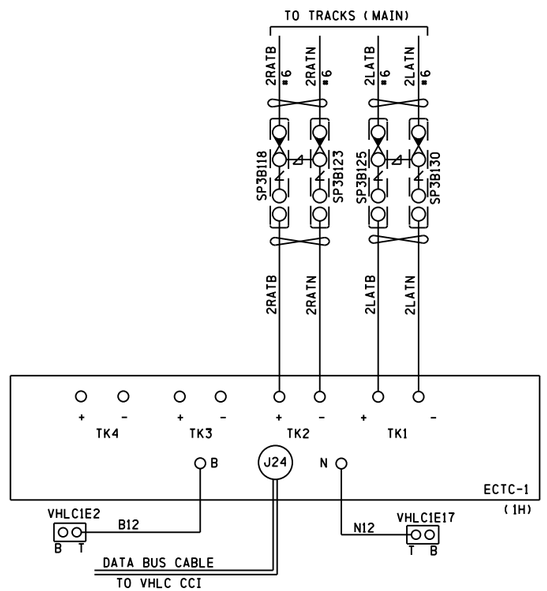

= TEST LINK - GOLD NUT ON FILLED SIDE

= TWISTED PAIR

ALL WIRING TO BE #10 AWG UNLESS OTHERWISE NOTED.

SII 13 MAR 2014

PROPOSED

DESIGN NO. PTC-003

RED-IN YELLOW-OUT

AS INSTALLED

DATE _____

BY _____

(PRINT NAME)

PROPOSED D	M	Y	REVISIONS	D	C	COMPLETED D	M	Y	C
			PLAN REDRAWN			13	03	14	MAB
13	03	14	PTC UPGRADE	BSH	MAB				

REGION SOUTHERN

SUB. CHAMPAIGN 341

SIGNALS AND COMMUNICATIONS HOMEWOOD

DES. HARMON

13 OCTOBER 2000

CH.

TRACK & SIGNAL PLAN
TRACK CONNECTIONS
EFFINGHAM, IL

RICKELMAN AVE

CHA-196.80-01 02

DOT# 289 178A 34

SIEMENS INDUSTRY INC

DES.: BSH	DATE: 03/13/14	JOB NO.: JXXE04655	
CKD.: MAB	ISSUE DATE: N/A	EST. NO.: QDE000258	
DRN.: BSH	PLAN NO.: N/A	SHEET 2 OF 39	
P TIME: 13:45	P DATE: $$PLOT_DATE	CAD ID.: CHA-196.80-02	

REVISIONS

NO.	DATE	BY	DESCRIPTION	APP. BY
1				
2				
3				
4				
5				

cha-196.80-02.dgn
24-SEP-2015

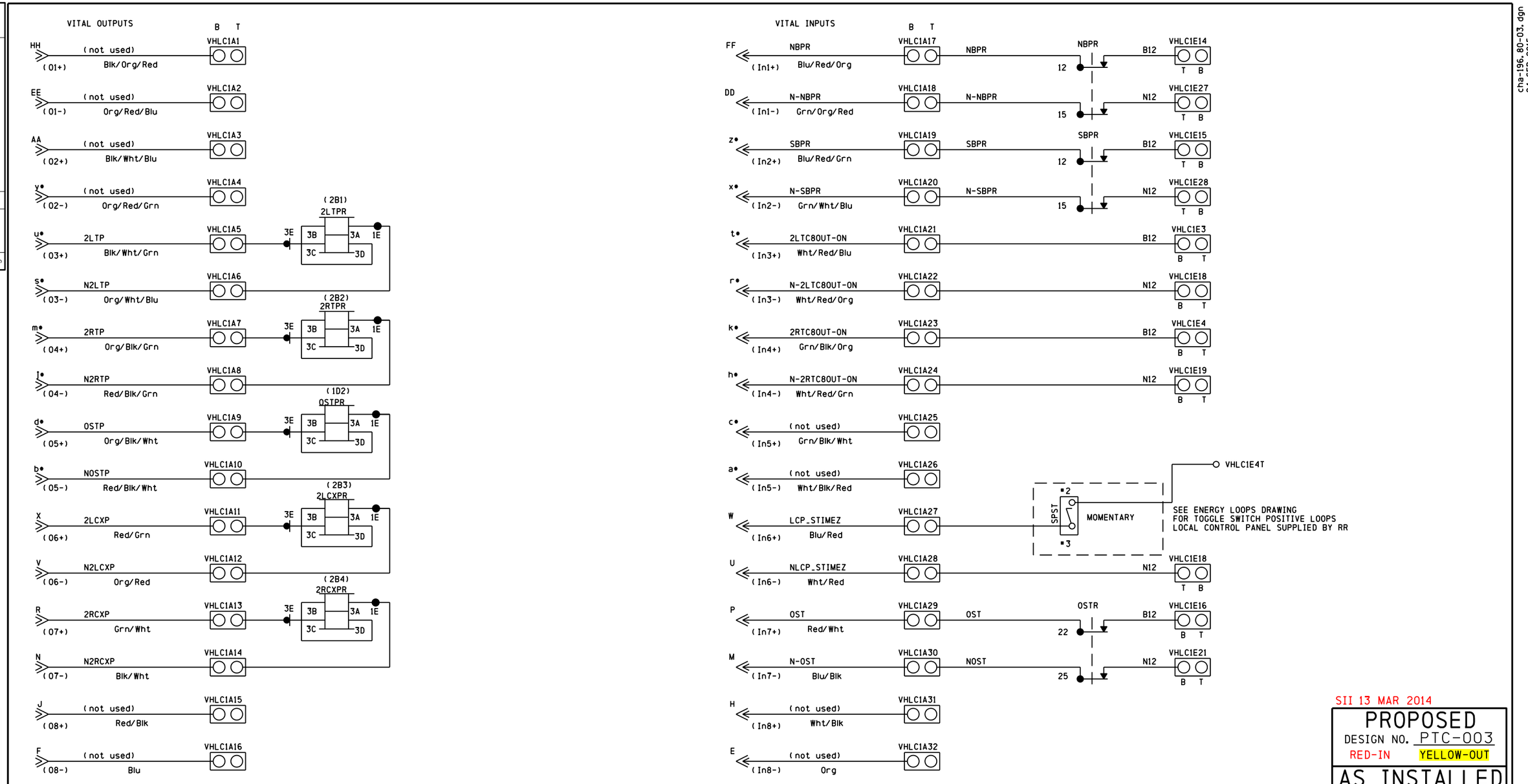
VITAL OUTPUTS
B T
HH (not used) (O1+) Blk/Org/Red VHLC1A1
EE (not used) (O1-) Org/Red/Blu VHLC1A2
AA (not used) (O2+) Blk/Wht/Blu VHLC1A3
y* (not used) (O2-) Org/Red/Grn VHLC1A4
u* 2LTP (O3+) Blk/Wht/Grn VHLC1A5
s* N2LTP (O3-) Org/Wht/Blu VHLC1A6
m* 2RTP (O4+) Org/Blk/Grn VHLC1A7
l* N2RTP (O4-) Red/Blk/Grn VHLC1A8
d* OSTP (O5+) Org/Blk/Wht VHLC1A9
b* NOSTP (O5-) Red/Blk/Wht VHLC1A10
x 2LCXP (O6+) Red/Grn VHLC1A11
v N2LCXP (O6-) Org/Red VHLC1A12
R 2RCXP (O7+) Grn/Wht VHLC1A13
N N2RCXP (O7-) Blk/Wht VHLC1A14
J (not used) (O8+) Red/Blk VHLC1A15
F (not used) (O8-) Blu VHLC1A16
(2B1) 2LTPR
(2B2) 2RTPR
(1D2) OSTPR
(2B3) 2LCXPR
(2B4) 2RCXPR
3E 3B 3A 1E 3C 3D
VITAL INPUTS
B T
FF NBPR (In1+) Blu/Red/Org VHLC1A17 NBPR NBPR 12 B12 VHLC1E14
DD N-NBPR (In1-) Grn/Org/Red VHLC1A18 N-NBPR 15 N12 VHLC1E27
z* SBPR (In2+) Blu/Red/Grn VHLC1A19 SBPR SBPR 12 B12 VHLC1E15
x* N-SBPR (In2-) Grn/Wht/Blu VHLC1A20 N-SBPR 15 N12 VHLC1E28
t* 2LTC8OUT-ON (In3+) Wht/Red/Blu VHLC1A21 B12 VHLC1E3
r* N-2LTC8OUT-ON (In3-) Wht/Red/Org VHLC1A22 N12 VHLC1E18
k* 2RTC8OUT-ON (In4+) Grn/Blk/Org VHLC1A23 B12 VHLC1E4
h* N-2RTC8OUT-ON (In4-) Wht/Red/Grn VHLC1A24 N12 VHLC1E19
c* (not used) (In5+) Grn/Blk/Wht VHLC1A25
a* (not used) (In5-) Wht/Blk/Red VHLC1A26
W LCP_STIMEZ (In6+) Blu/Red VHLC1A27
U NLCP_STIMEZ (In6-) Wht/Red VHLC1A28 N12 VHLC1E18
P OST (In7+) Red/Wht VHLC1A29 OST OSTR 22 B12 VHLC1E16
M N-OST (In7-) Blu/Blk VHLC1A30 NOST 25 N12 VHLC1E21
H (not used) (In8+) Wht/Blk VHLC1A31
E (not used) (In8-) Org VHLC1A32
VHLC1E4T
SPST ▪2 ▪3 MOMENTARY
SEE ENERGY LOOPS DRAWING
FOR TOGGLE SWITCH POSITIVE LOOPS
LOCAL CONTROL PANEL SUPPLIED BY RR
I/O BOARD POWER SUPPLY
B (DC+) B12 Wht VHLC1A33 B12L ▪10 2A7L 25A B12 ▪10 VHLC1E5
D (DC+) B12 Grn VHLC1A34
A (DC-) N12 Blk VHLC1A35 N12 ▪10 VHLC1E20
C (DC-) N12 Red VHLC1A36
WAGO BUSS JUMPER
WAGO BUSS JUMPER
Output Pin on Plug Coupler
Input Pin on Plug Coupler
ALL WIRING TO BE ▪16 AWG
UNLESS OTHERWISE NOTED
1. * (Asterisk) Denotes a lower case letter
2. Board Part Number 226808-001
3. VGPIO Cable P/N 200124-110
cha-196.80-03.dgn
24-SEP-2015
SII 13 MAR 2014
PROPOSED
DESIGN NO. PTC-003
RED-IN YELLOW-OUT
AS INSTALLED
DATE
BY
(PRINT NAME)
REVISIONS
PROPOSED D M Y
COMPLETED D M Y
PLAN REDRAWN 17 08 11 NST
13 03 14 PTC UPGRADE BSH MAB
REGION SOUTHERN
SUB. CHAMPAIGN 341
SIGNALS AND COMMUNICATIONS HOMEWOOD
DES. HARMON
13 OCTOBER 2000
CH.
VHLC-I/O SLOT 4
VITAL GENERAL PURPOSE I/O CARD
EFFINGHAM, IL
RICKELMAN AVE
CHA-196.80-02
03
DOT# 289 178A
SIEMENS INDUSTRY INC
DES.: BSH DATE: 03/13/14 JOB NO.: JXXE04655
CKD.: MAB ISSUE DATE: N/A EST. NO.: IQDE000258
DRN.: BSH PLAN NO.: N/A SHEET 3 OF 39
P TIME: 13:45 P DATE: $$PLOT_DATE CAD ID.: CHA-196.80-03
REVISIONS
NO. DATE BY DESCRIPTION APP. BY
1
2
3
4
5

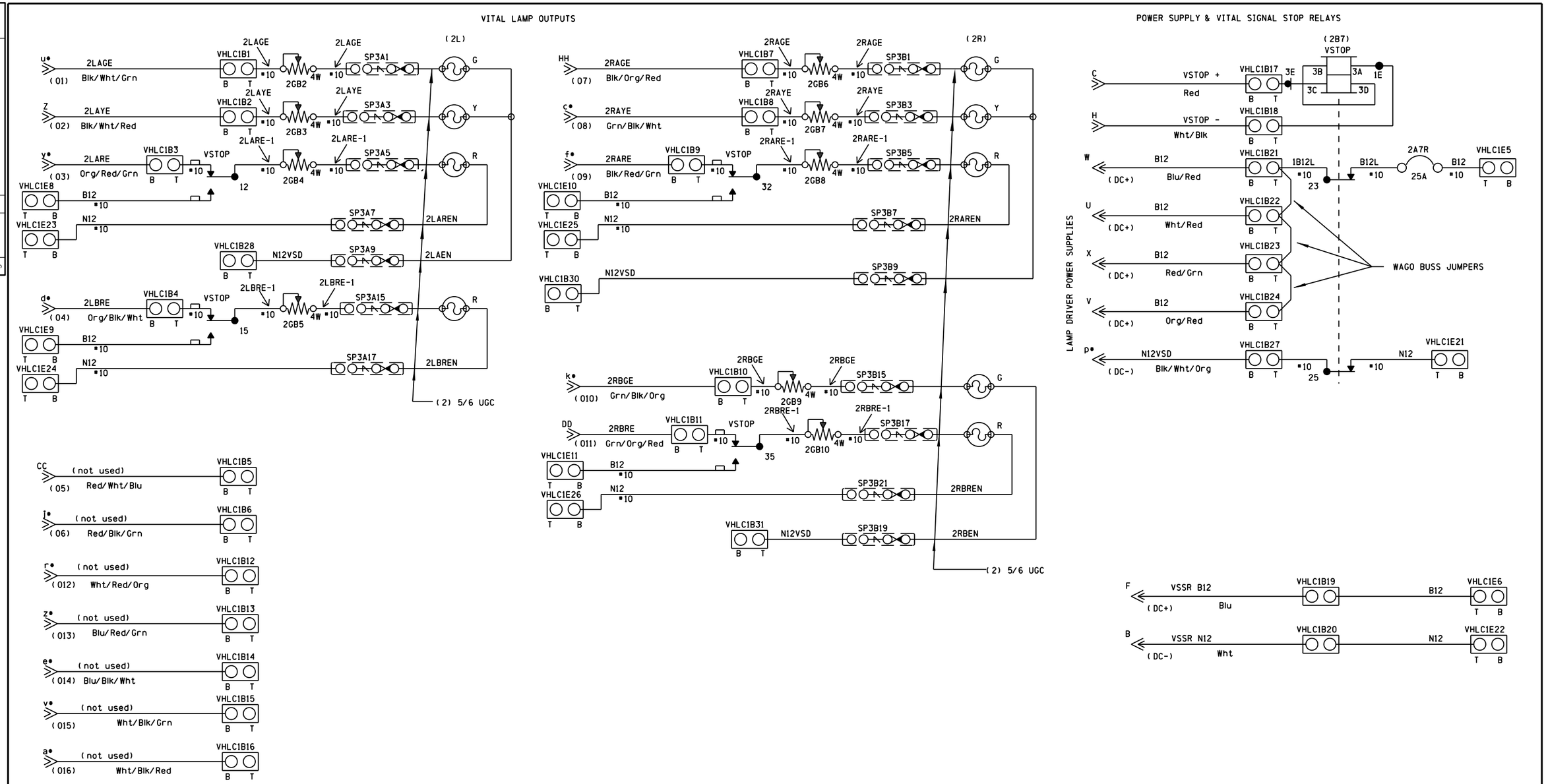

Output Pin on Plug Coupler

Input Pin on Plug Coupler

1. • (Asterisk) Denotes a lower case letter
2. 150 Watt Maximum continuous output
   (6) 25 Watt Lamps or (8) 18 Watt Lamps
3. VSD Module Part Number 226801-000
4. VSD Cable P/N 200125-010
5. There are no jumpers or switches on this module
6. = Test Link - Gold nut on filled side.

ALL WIRING TO BE #16 AWG
UNLESS OTHERWISE NOTED

SII 13 MAR 2014

PROPOSED
DESIGN NO. PTC-003
RED-IN YELLOW-OUT

AS INSTALLED
DATE
BY
(PRINT NAME)

PROPOSED D	M	Y	REVISIONS	D	C	COMPLETED D	M	Y	C
			PLAN REDRAWN			13	03	14	MAB
13	03	14	PTC UPGRADE	BSH	MAB				

REGION SOUTHERN
SUB. CHAMPAIGN 341

SIGNALS AND COMMUNICATIONS HOMEWOOD
13 OCTOBER 2000
DES. HARMON
CH.

VHLC-I/O SLOT 5
VITAL SIGNAL DRIVER MODULE
EFFINGHAM, IL
RICKELMAN AVE

CHA-196.80-03 04

DOT# 289 178A

REVISIONS			
NO.	DATE	BY	DESCRIPTION	APP. BY
1				
2				
3				
4				
5				

SIEMENS INDUSTRY INC

DES.: BSH	DATE: 03/13/14	JOB NO.: JXXE04655	
CKD.: MAB	ISSUE DATE: N/A	EST. NO.: 0DE000258	
DRN.: BSH	PLAN NO.: N/A	SHEET 4 OF 39	
P TIME: 13:45	P DATE: $$PLOT_DATE	CAD ID.: CHA-196.80-04	

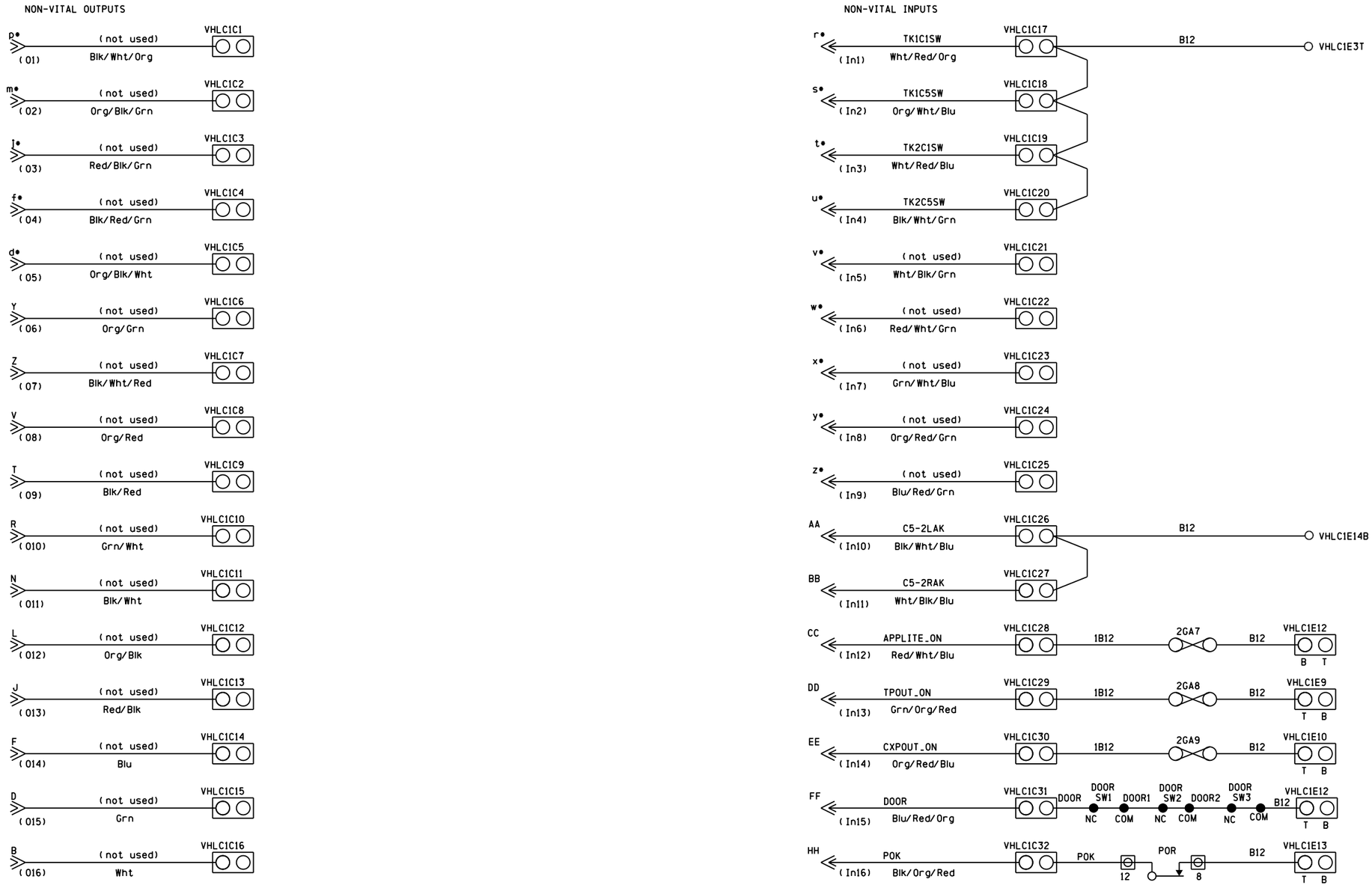

ALL WIRING TO BE #16 AWG
UNLESS OTHERWISE NOTED

≫ Output Pin on Plug Coupler
≪ Input Pin on Plug Coupler

1. * (Asterisk) Denotes a lower case letter
2. Board Part Number 226614-100
3. NVIO Cable P/N 201775-110
4. There are no Jumpers of switches on this module

PROPOSED D	M	Y	REVISIONS	D	C	COMPLETED D	M	Y	C
			PLAN REDRAWN			13	03	14	MAB
13	03	14	PTC UPGRADE	BSH	MAB				

SII 13 MAR 2014

PROPOSED
DESIGN NO. PTC-003
RED-IN YELLOW-OUT

AS INSTALLED
DATE
BY
(PRINT NAME)

REGION SOUTHERN
SUB. CHAMPAIGN 341

SIGNALS AND COMMUNICATIONS HOMEWOOD
13 OCTOBER 2000
DES. HARMON
CH.

VHLC-I/O SLOT 6
NON-VITAL I/O MODULE
EFFINGHAM, IL
RICKELMAN AVE

CHA-196.80-04 05

DOT# 289 178A

cha-196.80-05.dgn
24-SEP-2015

REVISIONS

NO.	DATE	BY	DESCRIPTION	APP. BY
1				
2				
3				
4				
5				

SIEMENS INDUSTRY INC

DES.: BSH	DATE: 03/13/14	JOB NO.: JXXE04655	
CKD.: MAB	ISSUE DATE: N/A	EST. NO.: 1QDE000258	
DRN.: BSH	PLAN NO.: N/A	SHEET 5 OF 39	
P TIME: 13:45	P DATE: $$PLOT_DATE	CAD ID.: CHA-196.80-05	

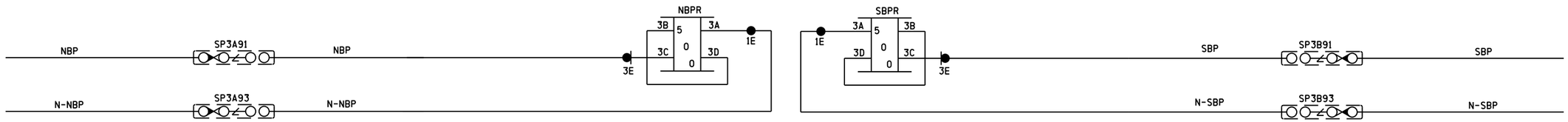

REVISIONS				
NO.	DATE	BY	DESCRIPTION	APP. BY
1				
2				
3				
4				
5				

SIEMENS INDUSTRY INC

DES.: BSH	DATE: 03/13/14	JOB NO.: JXXE04655	
CKD.: MAB	ISSUE DATE: N/A	EST. NO.: 0DE000258	
DRN.: BSH	PLAN NO.: N/A	SHEET 6 OF 39	
P TIME: 13:45	P DATE: $$PLOT_DATE	CAD ID.: CHA-196.80-06	

cha-196.80-06.dgn
24-SEP-2015

SII 13 MAR 2014

PROPOSED
DESIGN NO. PTC-003
RED-IN YELLOW-OUT

AS INSTALLED
DATE _____
BY _____
(PRINT NAME)

PROPOSED D	PROPOSED M	PROPOSED Y	REVISIONS	D	C	COMPLETED D	COMPLETED M	COMPLETED Y	C
			PLAN REDRAWN			13	03	14	MAB
13	03	14	PTC UPGRADE	BSH	MAB				

REGION SOUTHERN
SUB. CHAMPAIGN 341

SIGNALS AND COMMUNICATIONS HOMEWOOD
13 OCTOBER 2000
DES. HARMON
CH.

LINE CIRCUITS
EFFINGHAM, IL
RICKELMAN AVE

CHA-196.80-05 06

DOT# 289 178A

REVISIONS				
NO.	DATE	BY	DESCRIPTION	APP. BY
1				
2				
3				
4				
5				

VHLC (FRONT VIEW) (1G)

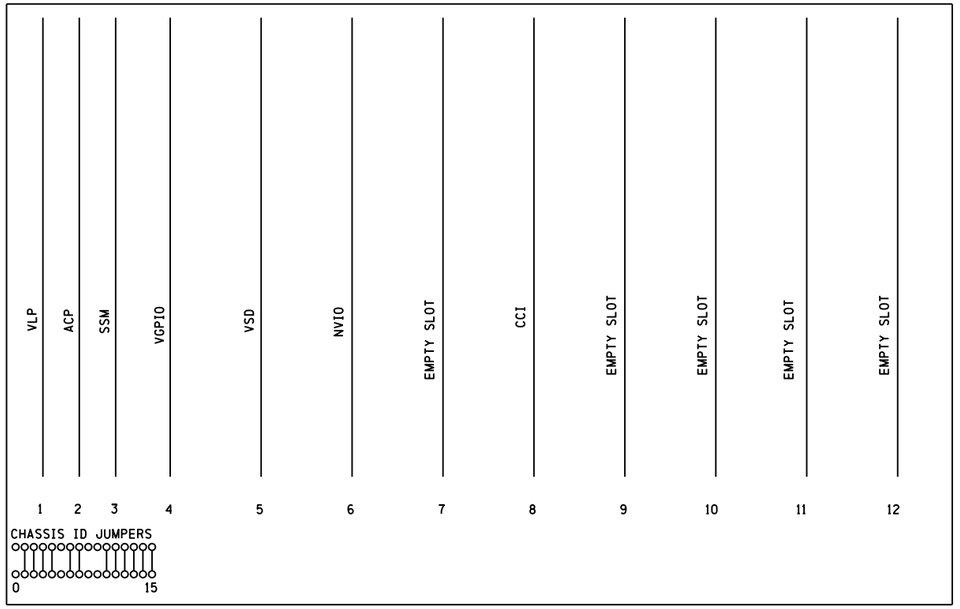

NOTE: COUNT FROM ZERO WHEN CUTTING CHASSIS ID

VHLC (REAR VIEW)

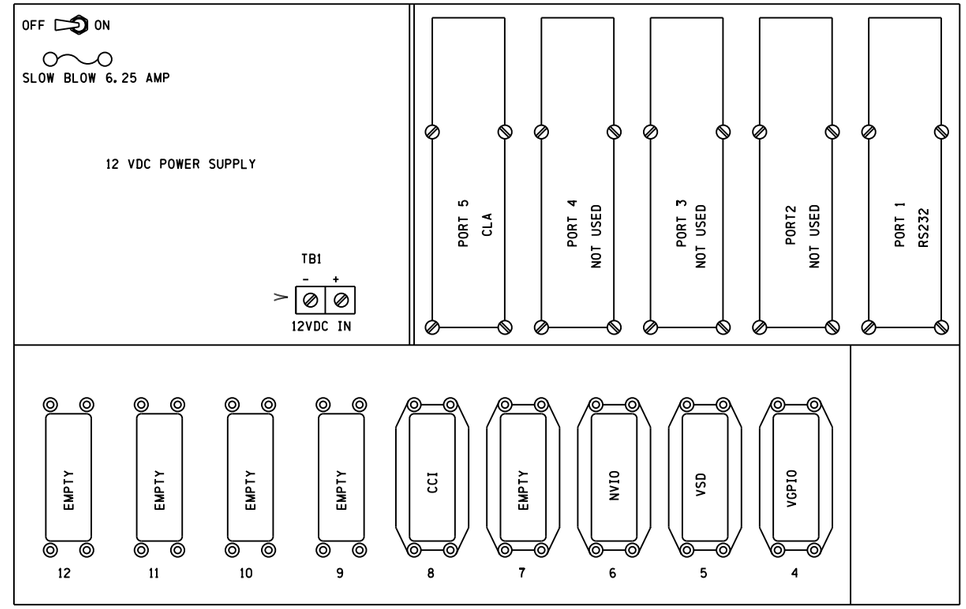

MODULE	DESCRIPTION	PART NUMBERS MODULE	PART NUMBERS CABLE	CONFIGURATION / USE
VGPIO	VITAL GENERAL PURPOSE I/O	226808-001	200124-110	8 BIPOLAR INPUTS - 8 BIPOLAR OUTPUTS
VGP16I	VITAL 16 INPUT CARD	226855-XXX	200661-120	16 BIPOLAR INPUTS
VGP8I	VITAL 8 INPUT CARD	226806-XXX	201931-120	8 BIPOLAR INPUTS
VSD	VITAL SIGNAL DRIVER	226801-000	200125-010	150 WATT CONTINUOUS LAMP OUTPUTS
CCI	CODED TRACK INTERFACE	226802-001	200123-001	2 TRACK CIRCUIT INTERFACE SYSTEMS (8 TRACKS)
NVIO	NON-VITAL I/O	226614-100	201775-110	16 INPUTS - 16 OUTPUTS
NV32I	NON-VITAL 32 INPUT	226856-001	200660-120	32 INPUTS
RS232	ISOLATED RS-232	226650-000	NONE	COMMUNICATIONS VIA RS-232 PROTOCOLS
MODEM	MODEM	226768-XXX	NONE	COMM VIA BELL SYSTEM 103, 202 OR 212 PROTOCOLS
VLP	VITAL LOGIC PROCESSOR	226610-100	NONE	VITAL LOGIC CONTROL
SSM	SITE SPECIFIC MODULE	226612-003	NONE	SITE SPECIFIC PROGRAM
ACP	AUXILIARY COMM PROCESSOR	226611-200	NONE	COMMUNICATIONS CONTROL
MEM	MEMORY EXPANSION MODULE		NONE	SUPPLEMENTAL RAM FOR ACP CARD

227713-XXX

VHLC CABLE COLOR CODE

PIN	WIRE COLOR CODE
A	BLACK
B	WHITE
C	RED
D	GREEN
E	ORANGE
F	BLUE
H	WHITE/BLACK
J	RED/BLACK
K	GREEN/BLACK
L	ORANGE/BLACK
M	BLUE/BLACK
N	BLACK/WHITE
P	RED/WHITE
R	GREEN/WHITE
S	BLUE/WHITE
T	BLACK/RED
U	WHITE/RED
V	ORANGE/RED
W	BLUE/RED
X	RED/GREEN
Y	ORANGE/GREEN
Z	BLACK/WHITE/RED
a	WHITE/BLACK/RED
b	RED/BLACK/WHITE
c	GREEN/BLACK/WHITE

PLUG

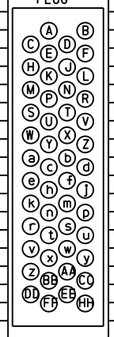

PIN	WIRE COLOR CODE
d	ORANGE/BLACK/WHITE
e	BLUE/BLACK/WHITE
f	BLACK/RED/GREEN
h	WHITE/RED/GREEN
j	RED/BLACK/GREEN
k	GREEN/BLACK/ORANGE
m	ORANGE/BLACK/GREEN
n	BLUE/WHITE/ORANGE
p	BLACK/WHITE/ORANGE
r	WHITE/RED/ORANGE
s	ORANGE/WHITE/BLUE
t	WHITE/RED/BLUE
u	BLACK/WHITE/GREEN
w	WHITE/BLACK/GREEN
v	RED/WHITE/GREEN
x	GREEN/WHITE/BLUE
y	ORANGE/RED/GREEN
z	BLUE/RED/GREEN
AA	BLACK/WHITE/BLUE
BB	WHITE/BLACK/BLUE
CC	RED/WHITE/BLUE
DD	GREEN/ORANGE/RED
EE	ORANGE/RED/BLUE
FF	BLUE/RED/ORANGE
HH	BLACK/ORANGE/RED

CHASSIS ID 0318

NOTE: 4 JUMPERS = 1 CHASSIS ID DIGIT

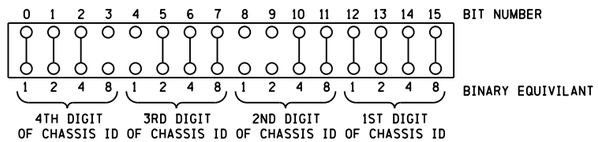

CHASSIS ID TO JUMPER CUT PATTERN CONVERSION TABLE

JUMPER CUT PATTERN (1 2 4 8)	0	1	2	3	4	5	6	7	8	9	A	B	C	D	E	F
ID DIGIT	0	1	2	3	4	5	6	7	8	9	A	B	C	D	E	F

SII 13 MAR 2014

PROPOSED
DESIGN NO. PTC-003
RED-IN YELLOW-OUT

AS INSTALLED
DATE _____
BY _____
(PRINT NAME)

PROPOSED D	PROPOSED M	PROPOSED Y	REVISIONS	D	C	COMPLETED D	COMPLETED M	COMPLETED Y	C
			PLAN REDRAWN			13	03	14	MAB
13	03	14	PTC UPGRADE	BSH	MAB				

REGION SOUTHERN
SUB. CHAMPAIGN 341

SIGNALS AND COMMUNICATIONS HOMEWOOD
13 OCTOBER 2000
DES. HARMON
CH.

VHLC CABINET CONFIGURATION
EFFINGHAM, IL
RICKELMAN AVE

CHA-196.80-06 07

DOT# 289 178A

SIEMENS INDUSTRY INC

DES.: BSH	DATE: 03/13/14	JOB NO.: JXXE04655	
CKD.: MAB	ISSUE DATE: N/A	EST. NO.: IQDE000258	
DRN.: BSH	PLAN NO.: N/A	SHEET 7 OF 39	
P TIME: 13:45	P DATE: $$PLOT_DATE	CAD ID.: CHA-196.80-07	

cha-196.80-07.dgn
24-SEP-2015

REVISIONS				
NO.	DATE	BY	DESCRIPTION	APP. BY
1				
2				
3				
4				
5				

SOFTWARE CONFIGURATION PROPERTIES

PTC SOFTWARE INFORMATION				
FILE	NAME	CRC	REV.	DATE
RULES LIBRARY	CN USOR GETS LIBRARY	0FAB0569	08	05/29/14
PTC CONFIG.	CHA_196_80.PTCBCFG			
PTC MAPPING	CHA-196.80-VHLC.PTCBMAP			

PTC SYSTEM EXECUTIVE INFORMATION				
PROCESSOR	VERSION	MODULE	CRC	DATE
A	083242-106	PTCP	21EADE6A	04/28/14
B	083242-106	PTCP	00C90339	04/28/14
C	083242-106	PTCP	B7EAEEB5	04/28/14

STATUS MSG. BODY USE

DEVICE	START BIT	END BIT
SIGNAL L	00	04
SIGNAL R	05	09

WAYSIDE DEVICES

SIGNAL 2L

DEVICE TYPE	VHLC- ELX- EC5
DEVICE STATUS OFFSET	00
MIN. DEBOUNCE TIME	0
DEFAULT DEBOUNCE TIME	0
MAX. DEBOUNCE TIME	0

APPLICABILITY PROPERTY	ENABLED	FP
NUMBER PLATE	F	□
LOW SIGNAL	F	□
ROUTE SIG.	T	□
SPEED SIG.	F	□
RULES 833-844	F	□

SIGNAL 2R

DEVICE TYPE	VHLC- ELX- EC5
DEVICE STATUS OFFSET	05
MIN. DEBOUNCE TIME	0
DEFAULT DEBOUNCE TIME	0
MAX. DEBOUNCE TIME	0

APPLICABILITY PROPERTY	ENABLED	FP
NUMBER PLATE	F	□
LOW SIGNAL	F	□
ROUTE SIG.	T	□
SPEED SIG.	F	□
RULES 833-844	F	□

GENERAL WIU SETTINGS

WIU ADDRESS	710334145005
BEACON CONTINUOUS	■
BEACON ON CHANGE	□
BEACON RATE	1000 mSEC
BEACON BIT TIME	300 SEC
BEACON END TIME	120 SEC
MAX. BEACON INTERVAL	900 SEC
TIME ZONE	0 HRS FROM GMT
OBSERVE DST	■
DST START	MONTH MAR WEEK 2
DST END	MONTH NOV WEEK 1
TIME SYNC SOURCE	EMP
EMP TIME MULTICAST IP ADD.	239.255.0.4
EMP TIME MULTICAST PORT	32768

PTC TIME SETTINGS

TIME MESSAGES BEFORE SENDING WSM	3
IGNORED TIME DIFFERENCE	3 SEC
MAX. TIME CHANGE WITHIN MINUTES	60 MIN
NO TIME SYNC MESSAGE	6 MIN
TIME MESSAGE DEVIATION	1 SEC
MAX. SECONDS TIME CHANGE	3 SEC
LRM MAX. SECONDS TIME DIFFERENCE	3 SEC
PTC TIME RESYNC ENABLE	■

EMP SETTINGS

SOURCE ADDRESS	cn.w.341450:05.wiu
DESTINATION ADDRESS	xx.i.x.000000:tmc
TIME FORMAT	ABSOLUTE
DATA INTEGRITY	APP. SPECIFIC
ENCRYPTION ENABLED	□
COMPRESSION ENABLED	□
TTL(TIMED BEACON)	12 SEC
QoS(TIMED BEACON)	1656
TTL(GET WIU STATUS)	12 SEC
QoS(GET WIU STATUS)	3576

CLASS D SETTINGS

USE SIGNAL SYSTEM ETHERNET SETTINGS	□
DESTINATION IP ADDRESS	10.255.255.20
DESTINATION TCP PORT	8001
MODE	BIDIRECTIONAL
LOG TRAFFIC	□
KEEP ALIVE INTERVAL	9000 mSEC
KEEP ALIVE ACK TIMEOUT	3000 mSEC
DATA ACK ENABLED	■
DATA ACK TIMEOUT	3000 mSEC
CONNECTION TIMEOUT	1000 mSEC
CONNECTION DELAY	1000 mSEC
NAK RETRY LIMIT	2
CONNECTION RETRY LIMIT	-1
RETRANSMIT DELAY	0
RECONNECTION LIMIT	-1

GENERAL ETHERNET SETTINGS

USE SIGNAL SYSTEM ETHERNET SETTINGS	□

PORT	IP ADDRESS	SUBNET MASK
PORT 1	192.168.0.11	255.255.255.0
PORT 2	10.255.255.81	255.255.255.0

DEF. GATEWAY
0.0.0.0

DHCP SERVER SETTINGS

PORT	ENABLED	IP POOL START ADDRESS	IP POOL END ADDRESS	DEFAULT GATEWAY
PORT 1	ENABLED	192.168.0.12	192.168.0.43	0.0.0.0
PORT 2	DISABLED	10.255.255.211	10.255.255.212	0.0.0.0

WEB INTERFACE

PORT	GUI ACCESS LEVEL
PORT 1	READ-WRITE
PORT 2	READ-WRITE

INACTIVITY TIMEOUT	60 MIN
WEB PORT NUMBER	80

	ENABLED	NETWORK	NET MASK
TRUSTED SOURCE 1	DISABLED	0.0.0.0	0.0.0.0
TRUSTED SOURCE 2	DISABLED	0.0.0.0	0.0.0.0

ROUTING TABLE

DESTINATION NET.	IP ADDRESS	SUBNET MASK	GATEWAY	ETHERNET PORT

FIELD TO CONFIRM ALL PTC CONFIGURATION SETTINGS

TO BE CONFIRMED

CONFIRMED
DATE _____
BY _____
(PRINT NAME)

SII 13 MAR 2014

PROPOSED
DESIGN NO. PTC-003
RED-IN YELLOW-OUT

AS INSTALLED
DATE _____
BY _____
(PRINT NAME)

PROPOSED			REVISIONS	D	C	COMPLETED			C
D	M	Y				D	M	Y	

REGION SOUTHERN
SUB. CHAMPAIGN 341

SIGNALS AND COMMUNICATIONS HOMEWOOD
13 MARCH 2014
DES. BSH
CH. MAB

VHLC PTC WIU SOFTWARE CONFIGURATION
EFFINGHAM, IL
RICKELMAN AVE

CHA-196.80-08

DOT# 289 178A

cha-196.80-08.dgn
24-SEP-2015

SIEMENS INDUSTRY INC

DES.: BSH	DATE: 03/13/14	JOB NO.: JXXE04655	
CKD.: MAB	ISSUE DATE: N/A	EST. NO.: QDE000258	
DRN.: BSH	PLAN NO.: N/A	SHEET 8 OF 39	
P TIME: 13:45	P DATE: $$PLOT_DATE	CAD ID.: CHA-196.80-08	

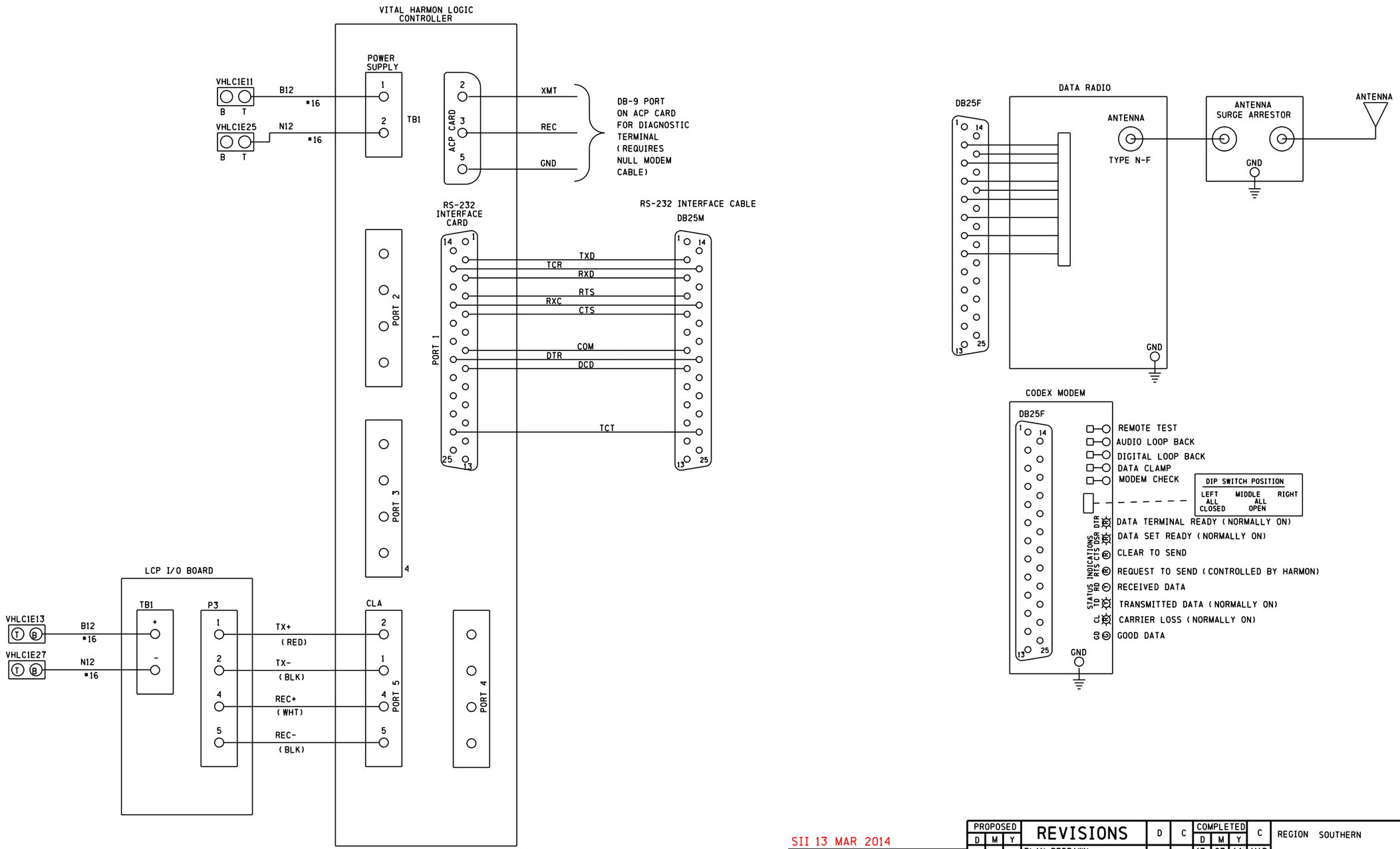

NOTES: 1. ALL WIRING TO BE #22 AWG UNLESS DESIGNATED OTHERWISE.

SII 13 MAR 2014

PROPOSED
DESIGN NO. PTC-003
RED-IN YELLOW-OUT

AS INSTALLED
DATE
BY
(PRINT NAME)

PROPOSED D	M	Y	REVISIONS	D	C	COMPLETED D	M	Y	C
			PLAN REDRAWN			13	03	14	MAB
13	03	14	PTC UPGRADE	BSH	MAB				

REGION SOUTHERN
SUB. CHAMPAIGN 341

SIGNALS AND COMMUNICATIONS HOMEWOOD
DES. HARMON
13 OCTOBER 2000
CH.

VHLC INTERCONNECTIONS
EFFINGHAM, IL
RICKELMAN AVE

CHA-196.80-07 09

DOT# 289 178A

cha-196.80-09.dgn
24-SEP-2015

REVISIONS				
NO.	DATE	BY	DESCRIPTION	APP. BY
1				
2				
3				
4				
5				

SIEMENS INDUSTRY INC

DES.: BSH	DATE: 03/13/14	JOB NO.: JXXE04655	
CKD.: MAB	ISSUE DATE: N/A	EST. NO.: QDE000258	
DRN.: BSH	PLAN NO.: N/A	SHEET 9 OF 39	
P TIME: 13:45	P DATE: $$PLOT_DATE	CAD ID.: CHA-196.80-09	

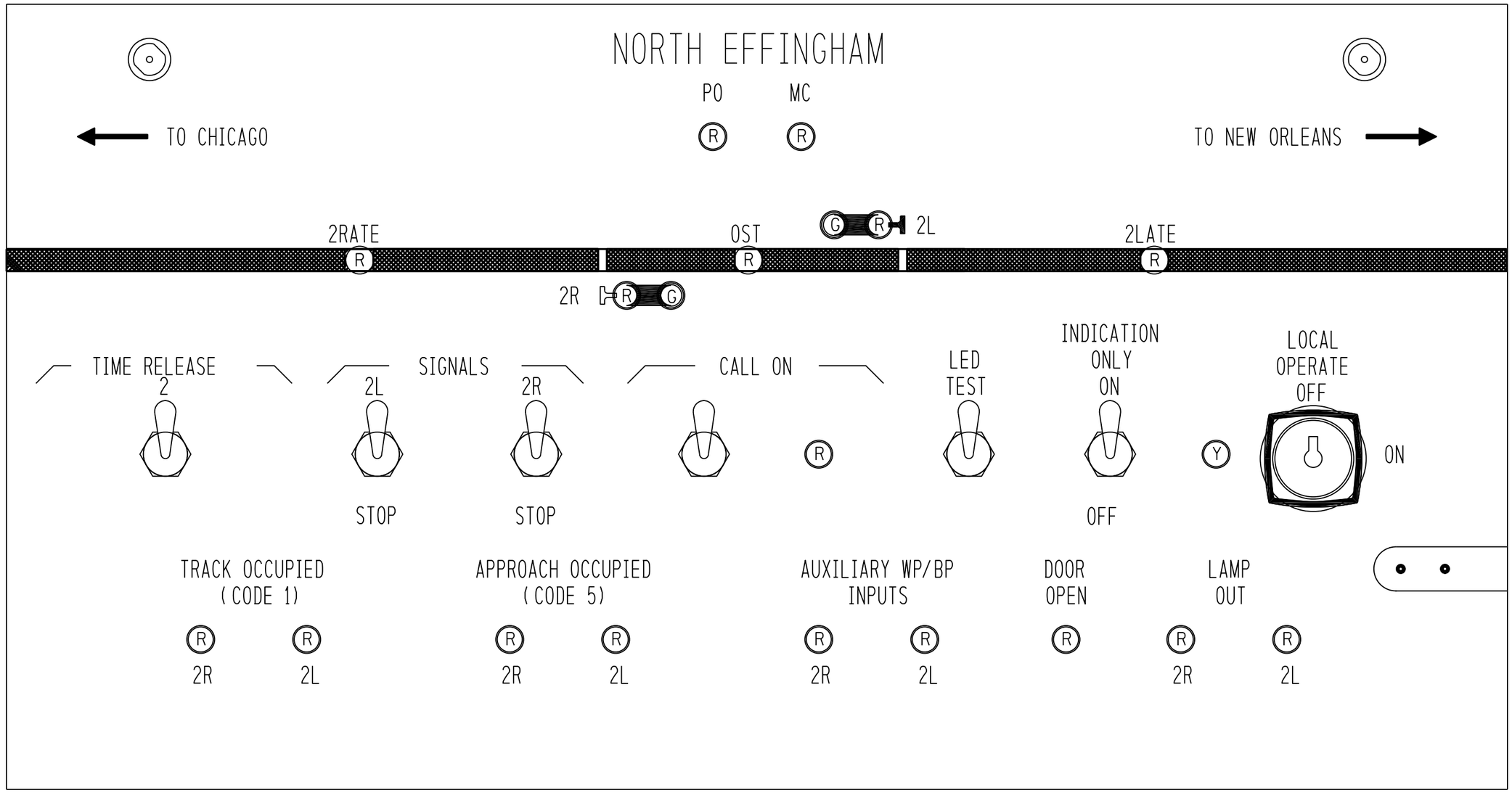

REVISIONS				
NO.	DATE	BY	DESCRIPTION	APP. BY
1				
2				
3				
4				
5				

SIEMENS INDUSTRY INC

DES.: BSH	DATE: 03/13/14	JOB NO.: JXXE04655	
CKD.: MAB	ISSUE DATE: N/A	EST. NO.: 1QDE000258	
DRN.: BSH	PLAN NO.: N/A	SHEET 10 OF 39	
P TIME: 13:45	P DATE: $$PLOT_DATE	CAD ID.: CHA-196.80-10	

SII 13 MAR 2014

PROPOSED
DESIGN NO. PTC-003
RED-IN YELLOW-OUT

AS INSTALLED
DATE _____
BY _____
(PRINT NAME)

PROPOSED D	PROPOSED M	PROPOSED Y	REVISIONS	D	C	COMPLETED D	COMPLETED M	COMPLETED Y	C
			PLAN REDRAWN			13	03	14	MAB
13	03	14	PTC UPGRADE	BSH	MAB				

REGION SOUTHERN
SUB. CHAMPAIGN 341
CN

SIGNALS AND COMMUNICATIONS HOMEWOOD
DES. HARMON
13 OCTOBER 2000
CH.

LOCAL CONTROL PANEL
EFFINGHAM, IL
RICKELMAN AVE

CHA-196.80-08 10

DOT# 289 178A

cha-196.80-10.dgn
24-SEP-2015

REVISIONS				
NO.	DATE	BY	DESCRIPTION	APP. BY
1				
2				
3				
4				
5				

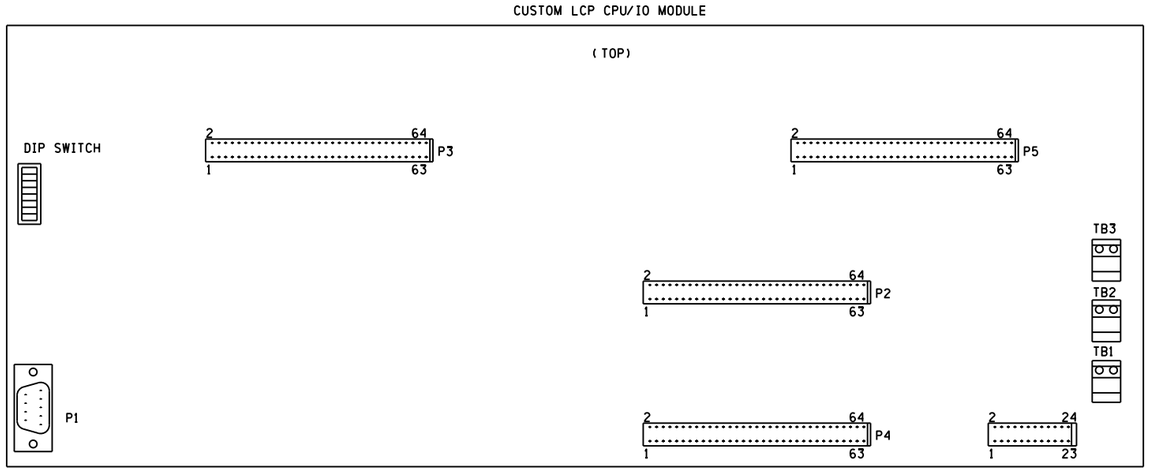

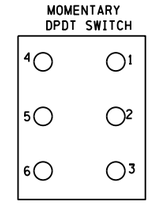

DIP SWITCH LOCATED ON CPU BOARD

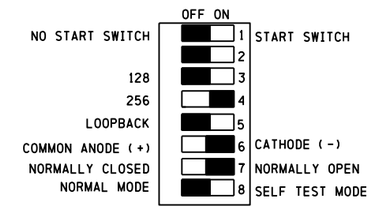

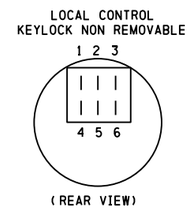

LCP EPROM

VER. 1.01
CK SUM = 5AF3

CLCP WIRE HARNESS BETWEEN POWER SUPPLY AND CPU/IO BOARD

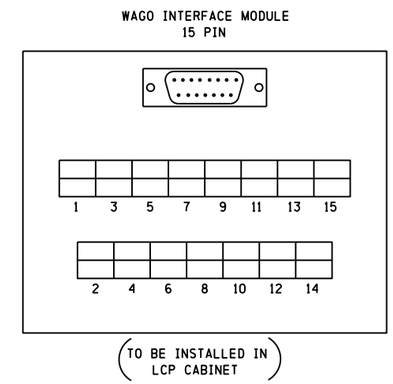

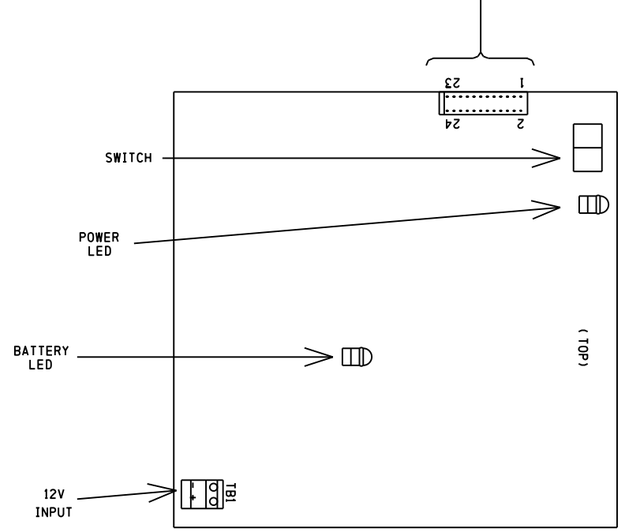

CUSTOM LCP POWER SUPPLY

SIEMENS INDUSTRY INC		
DES.: BSH	DATE: 03/13/14	JOB NO.: JXXE04655
CKD.: MAB	ISSUE DATE: N/A	EST. NO.: 1QDE000258
DRN.: BSH	PLAN NO.: N/A	SHEET 11 OF 39
P TIME: 13:46	P DATE: $$PLOT_DATE	CAD ID.: CHA-196.80-11

SII 13 MAR 2014

PROPOSED
DESIGN NO. PTC-003
RED-IN YELLOW-OUT

AS INSTALLED
DATE _____
BY _____
(PRINT NAME)

PROPOSED D	PROPOSED M	PROPOSED Y	REVISIONS	D	C	COMPLETED D	COMPLETED M	COMPLETED Y	C
			PLAN REDRAWN			13	03	14	MAB
13	03	14	PTC UPGRADE	BSH	MAB				

REGION SOUTHERN
SUB. CHAMPAIGN 341

SIGNALS AND COMMUNICATIONS HOMEWOOD
DES. HARMON
13 OCTOBER 2000
CH.

CLCP EQUIPMENT DETAIL

EFFINGHAM, IL
RICKELMAN AVE

CHA-196.80-09 11

DOT# 289 178A

cha-196.80-11.dgn
24-SEP-2015

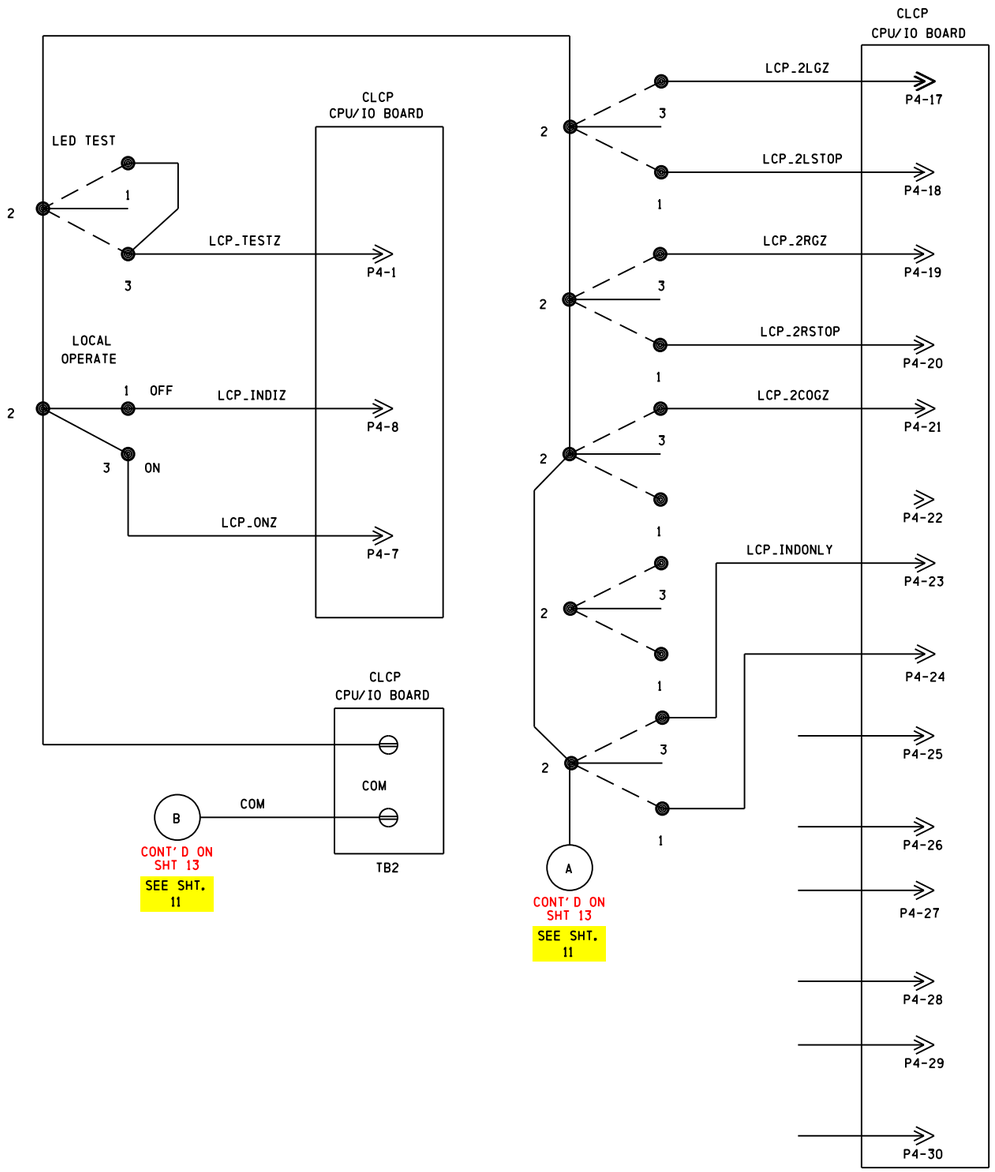

REVISIONS				
NO.	DATE	BY	DESCRIPTION	APP. BY
1				
2				
3				
4				
5				

SIEMENS INDUSTRY INC

DES.: BSH	DATE: 03/13/14	JOB NO.: JXXE04655	
CKD.: MAB	ISSUE DATE: N/A	EST. NO.: 0DE000258	
DRN.: BSH	PLAN NO.: N/A	SHEET 12 OF 39	
P TIME: 13:46	P DATE: $$PLOT_DATE	CAD ID.: CHA-196.80-12	

cha-196.80-12.dgn
24-SEP-2015

SII 13 MAR 2014

PROPOSED
DESIGN NO. PTC-003
RED-IN YELLOW-OUT

AS INSTALLED
DATE _____
BY _____
(PRINT NAME)

PROPOSED D	PROPOSED M	PROPOSED Y	REVISIONS	D	C	COMPLETED D	COMPLETED M	COMPLETED Y	C
			PLAN REDRAWN			13	03	14	MAB
13	03	14	PTC UPGRADE	BSH	MAB				

REGION SOUTHERN
SUB. CHAMPAIGN 341

SIGNALS AND COMMUNICATIONS HOMEWOOD
13 OCTOBER 2000
DES. HARMON
CH.

CLCP CIRCUITS

EFFINGHAM, IL
RICKELMAN AVE

CHA-196.80-10

DOT# 289 178A

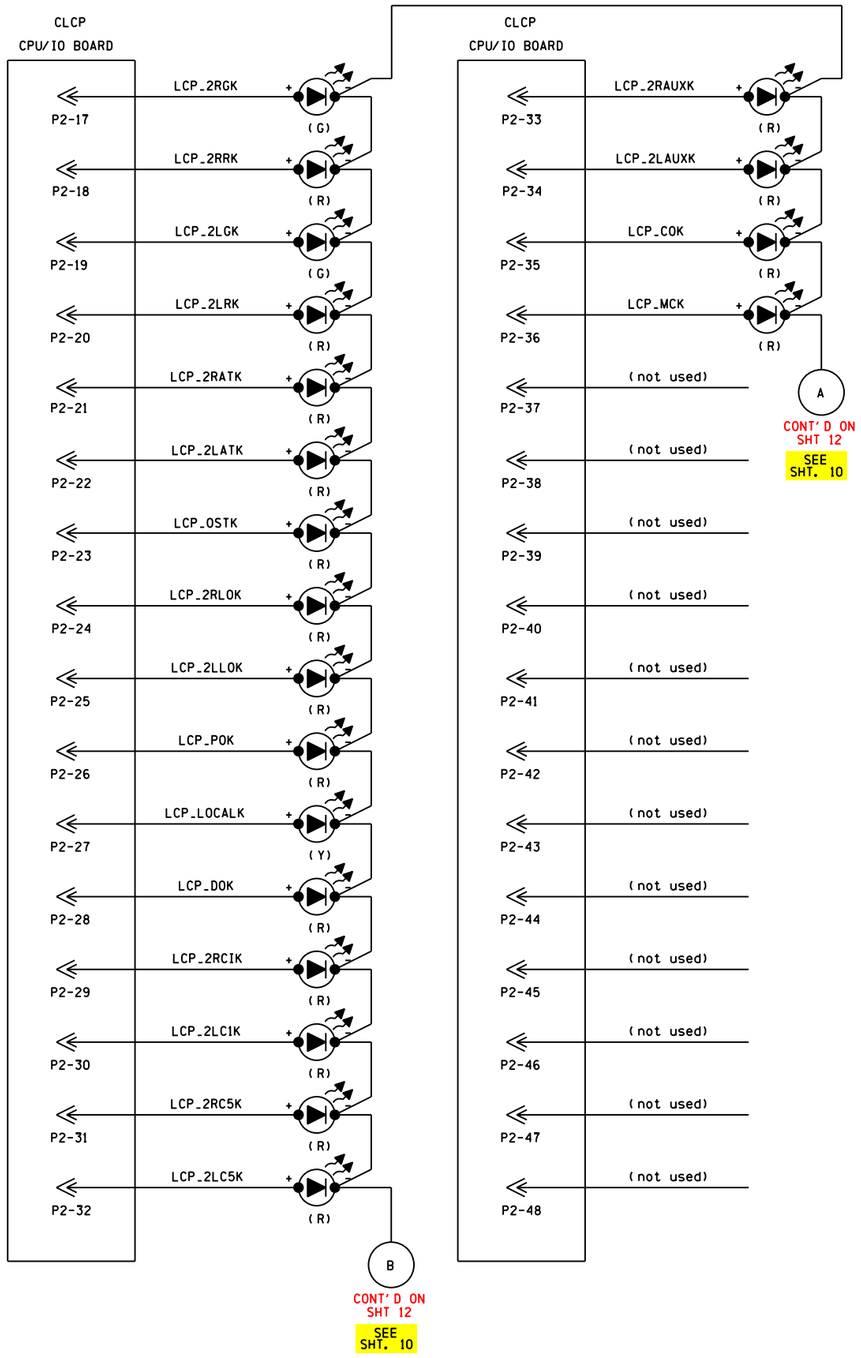

REVISIONS				
NO.	DATE	BY	DESCRIPTION	APP. BY
1				
2				
3				
4				
5				

SIEMENS INDUSTRY INC

DES.: BSH	DATE: 03/13/14	JOB NO.: JXXE04655	
CKD.: MAB	ISSUE DATE: N/A	EST. NO.: ¤DEO00258	
DRN.: BSH	PLAN NO.: N/A	SHEET 13 OF 39	
P TIME: 13:46	P DATE: $$PLOT_DATE	CAD ID.: CHA-196.80-13	

SII 13 MAR 2014

PROPOSED
DESIGN NO. PTC-003
RED-IN YELLOW-OUT

AS INSTALLED
DATE _____
BY _____
(PRINT NAME)

PROPOSED D	PROPOSED M	PROPOSED Y	REVISIONS	D	C	COMPLETED D	COMPLETED M	COMPLETED Y	C
			PLAN REDRAWN			13	03	14	MAB
13	03	14	PTC UPGRADE	BSH	MAB				

REGION SOUTHERN
SUB. CHAMPAIGN 341

SIGNALS AND COMMUNICATIONS
HOMEWOOD
13 OCTOBER 2000
DES. HARMON
CH.

CLCP CIRCUITS
EFFINGHAM, IL
RICKELMAN AVE

CHA-196.80-11 13

DOT# 289 178A

cha-196.80-13.dgn
24-SEP-2015

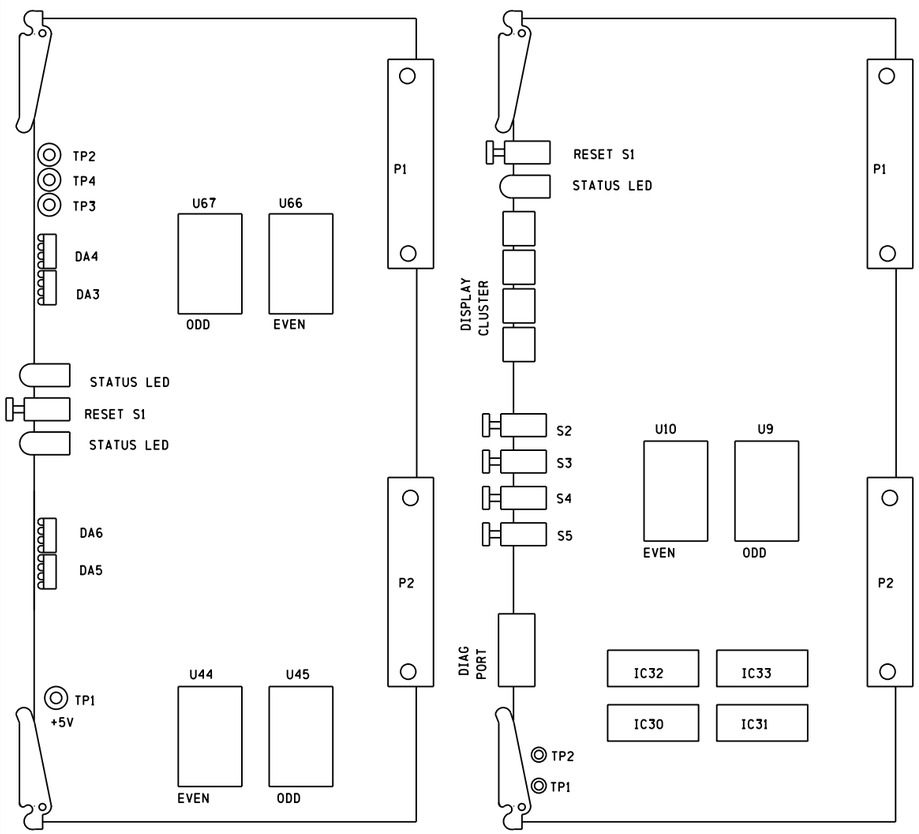

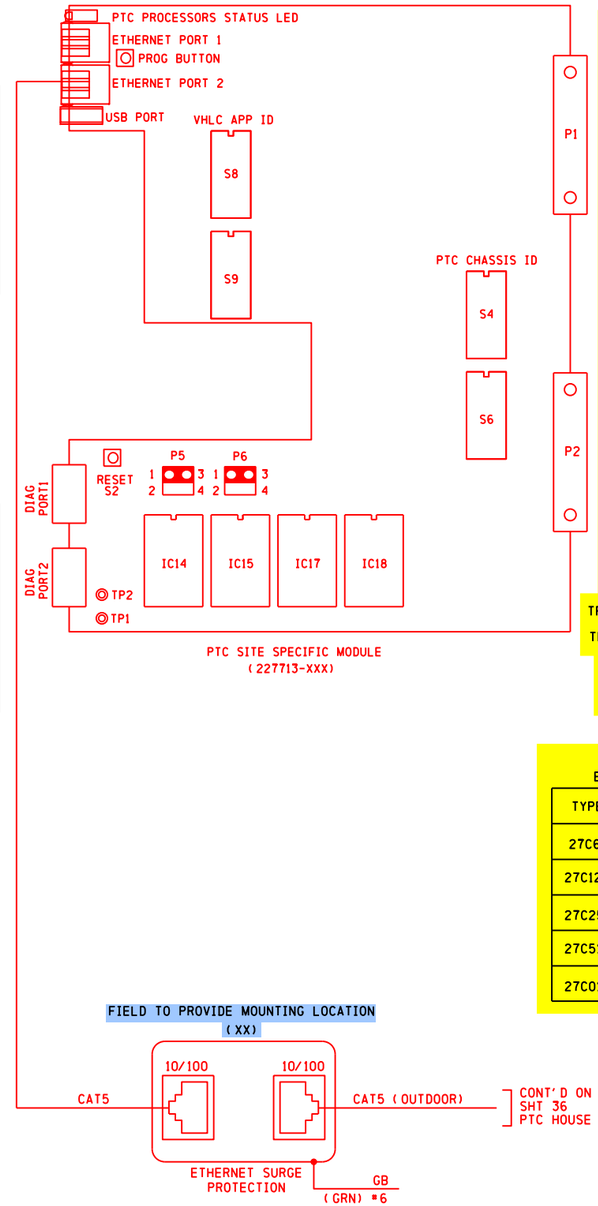

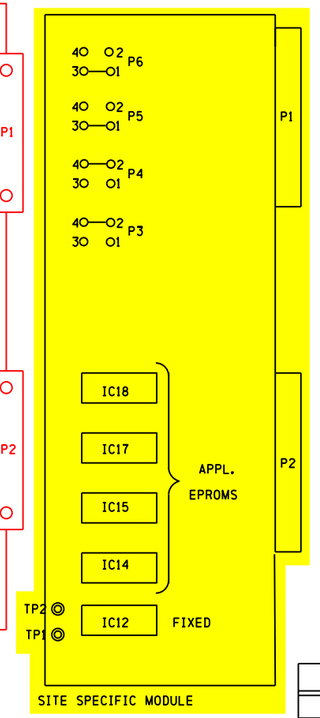

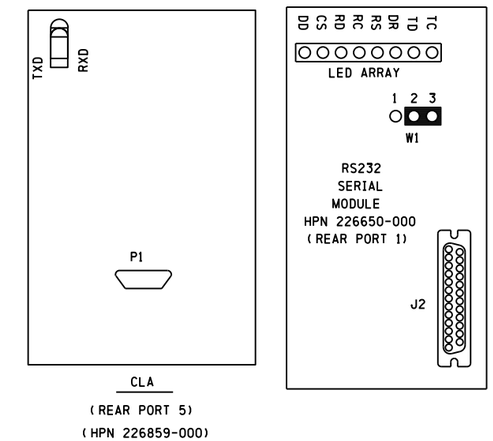

NOTE: JUMPER W1 ON RS-232 MODULE
PINS 1 & 2 = HLC PROVIDES CLOCK
PINS 2 & 3 = EXTERNAL DEVICE PROVIDES CLOCK

SITE SPECIFIC MODULE
EPROM TYPE JUMPER SELECTION

TYPE	P3	P4	P5	P6
27C64	1-3	1-3	1-3	1-3
27C128	1-3	1-3	1-3	1-3
27C256	2-4	1-3	1-3	1-3
27C512	2-4	2-4	1-3	1-3
27C010	2-4	2-4	2-4	1-3

CONTROLS

	1	2	3	4	5	6	7	8
WORD 1	2LGZ	STOP	2RGZ	COZ				

INDICATIONS

	1	2	3	4	5	6	7	8
WORD 1	2LGK	2RGK	ASK					
WORD 2	2LAK	2RAK		2LLOK	2RLOK			
WORD 3	POK	LCK	DOK		NBPK	SBPK		OSTK
WORD 4	VGPK	VSDK	NV1K		CC1K		RT2LK	RT2RK

SOFTWARE DATA TABLE

	MODULE	EPROM	PROGRAM/VERSION	CKSUM	CRC	DATE
	VLP	U44	VLP 1.8 ALT 5	011B	09ED	
	VLP	U45	VLP 1.8 ALT 5	F5A6	C10D	
	VLP	U66	VLP 1.8 ALT 5	35E6	945E	
	VLP	U67	VLP 1.8 ALT 5	15A2	FB4A	
	ACP	IC30	ACP HP1 V1.4	1200		
	ACP	IC31	ACP HP1 V1.4	B834		
	ACP	IC32	ACP HP1 V1.4	D1F9		
	ACP	IC33	ACP HP1 V1.4	D371		
	ACP	U9	CHA-196.80 VHLC			
	ACP	U10	CHA-196.80 VHLC			
SSM	PTC SSM	IC14	CHA-196.80 VHLC			
SSM	PTC SSM	IC15				
SSM	PTC SSM	IC16				
SSM	PTC SSM	IC17				

TYPICAL INSTALLATION
OF EPROM

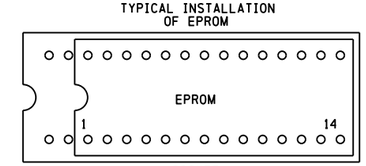

SII 13 MAR 2014

TO BE CONFIRMED

CONFIRMED
DATE
BY
(PRINT NAME)

PROPOSED
DESIGN NO. PTC-003
RED-IN YELLOW-OUT

AS INSTALLED
DATE
BY
(PRINT NAME)

PROPOSED D	M	Y	REVISIONS	D	C	COMPLETED D	M	Y	C
			PLAN REDRAWN			13	03	14	MAB
13	03	14	PTC UPGRADE	BSH	MAB				

REGION SOUTHERN
SUB. CHAMPAIGN 341
SIGNALS AND COMMUNICATIONS HOMEWOOD
DES. HARMON
13 OCTOBER 2000
CH.
VITAL LOGIC CONTROLLER
SOFTWARE CONFIGURATION & JUMPERS
EFFINGHAM, IL
RICKELMAN AVE
CHA-196.80-12 14
DOT# 289 178A

REVISIONS

NO.	DATE	BY	DESCRIPTION	APP. BY
1				
2				
3				
4				
5				

SIEMENS INDUSTRY INC
DES.: BSH DATE: 03/13/14 JOB NO.: JXXE04655
CKD.: MAB ISSUE DATE: N/A EST. NO.: 10DE000258
DRN.: BSH PLAN NO.: N/A SHEET 14 OF 39
P TIME: 13:46 P DATE: $$PLOT_DATE CAD ID.: CHA-196.80-14

cha-196.80-14.dgn
24-SEP-2015

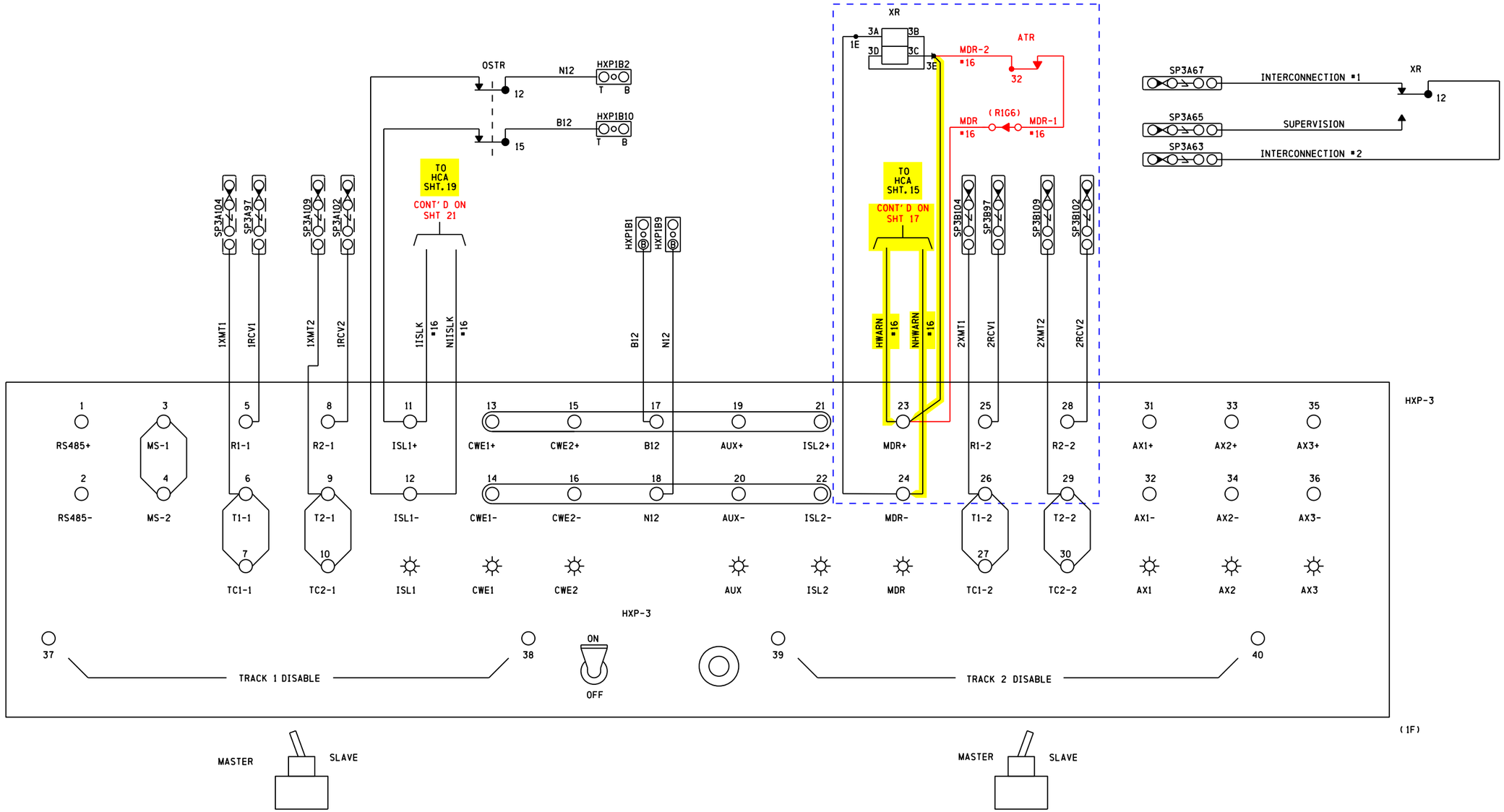

NOTES:
1. ALL WIRING #10 AWG UNLESS OTHERWISE NOTED
2. TERMINAL DESIGNATIONS:
   HXP1A1 = HXP RACK #1, WAGO STRIP A, TERMINAL 1
   SP1A1 = SURGE PANEL RACK #1, COLUMN A, TERMINAL 1
   PWR1A1 = POWER RACK #1, WAGO STRIP A, TERMINAL 1

DENOTES PROPOSAL 15-0213
REVISION 29/07/15

SII 13 MAR 2014

PROPOSED	
DESIGN NO. 15-0213	DESIGN NO. PTC-003
RED-IN YELLOW-OUT	RED-IN YELLOW-OUT
AS INSTALLED	AS INSTALLED
DATE	DATE
BY (PRINT NAME)	BY (PRINT NAME)

REVISIONS	PROPOSED D	PROPOSED M	PROPOSED Y	DESCRIPTION	D	C	COMPLETED D	COMPLETED M	COMPLETED Y	C
				PLAN REDRAWN			13	03	14	MAB
	13	03	14	PTC UPGRADE	BSH	MAB				
	29	07	15	XR RELAY WIRING CHANGE	JBF	TPF				

REGION SOUTHERN
SUB. CHAMPAIGN 341
SIGNALS AND COMMUNICATIONS HOMEWOOD
DES. HARMON
13 OCTOBER 2000
CH.
HXP-3 CABINET
EFFINGHAM, IL
RICKELMAN AVE
CHA-196.80-13
15
DOT# 289 178A

SIEMENS INDUSTRY INC
DES.: BSH DATE: 03/13/14 JOB NO.: JXXE04655
CKD.: MAB ISSUE DATE: N/A EST. NO.: GDE000258
DRN.: BSH PLAN NO.: N/A SHEET 15 OF 39
P TIME: 13:46 P DATE: $$PLOT_DATE CAD ID.: CHA-196.80-15

REVISIONS
NO. DATE BY DESCRIPTION APP. BY
1
2
3
4
5

cha-196.80-15.dgn
24-SEP-2015

REVISIONS				
NO.	DATE	BY	DESCRIPTION	APP. BY
1				
2				
3				
4				
5				

SWITCH INFORMATION

SWITCH	TRACK 1	TRACK 2
MASTER/SLAVE	MASTER	SLAVE
RSI FAULT JUMPER	N/A	N/A
RSI-LOS JUMPER	N/A	N/A

(NO RSI)

PROGRAM INFORMATION FOR 1-HXP-3

PROGRAM VERSION 2.70 OR LATER

☆ = FIELD ADJUSTMENT TO BE MADE ACCORDING TO THE HXP-3 INSTRUCTION MANUAL.

HXP - 3 ADJUSTMENTS

NO.	ADJUSTMENT NAME	TRACK 1	TRACK 2
1	APP. LENGTH	4300 4200	4300 4200
2	WARNING TIME	32	32
3	LIA	☆	☆
4	TC	☆	☆
5	MD-RESTART	☆	☆

AX ADJUSTMENTS

NO.	ABBREVIATION	AX 1	AX 2	AX 3
1	TK - ASN	"12"	—	—
2	OF - TK1	0	—	—
3	OF - TK2	0	—	—
4	WT	60	—	—
5	MD - RST	99	—	—
6	CW / MD	C	—	—
7	CJ - LOS	0	—	—
8	PJ - DET	15	—	—
9	POS - ST	dn	—	—

OPTION ADJUSTMENTS

NO.	ABBREVIATION	TRACK 1	TRACK 2
1	TK-ENA	UP	UP
2	TK FO	211	211
3	CW / MD	C	C
4	UNI - BI	u	u
5	NBS - C	☆	☆
6	CWEWT	80	80
7	LOS	16	16
8	IJ - LOS	5	5
9	BC	160	160
10	P - COMP	☆	☆
11	AX1	—	—
12	AX2	—	—
13	AX3	—	—
17	MDR - AX	n	n
18	MDR - TMR	10	10
19	MIN - WT	0	0
20	FS - DET	0	0
21	POS - ST	SEE POS-ST ADJUSTMENT	
47	ATO - RX	UP	UP
48	PF - ENA	dn	dn

MDR - AX ADJUSTMENTS

NO.	ABBREVIATION	TRACK 1	TRACK 2
1	OF - TK 1 OR 2	—	—
2	CJ - LOS	—	—
3	PJ - DET	—	—

POS - ST ADJUSTMENT

NO.	ABBREVIATION	TRACK 1	TRACK 2
1	POS - RX	0	0
2	POS - TM	0	0

FREQUENCY SELECTION (TRACK 1)

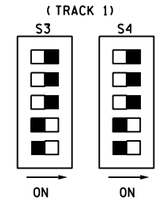

FREQUENCY SELECTION (TRACK 2)

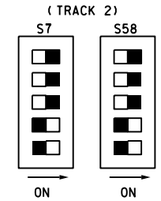

SYSTEM CONFIGURATION (TRACK 1) (TRACK 2)

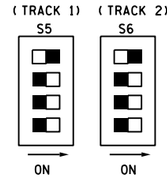

DENOTES PROPOSAL 15-0213 REVISION 29/07/15

SII 13 MAR 2014

PROPOSED	PROPOSED
DESIGN NO. 15-0213	DESIGN NO. PTC-003
RED-IN YELLOW-OUT	RED-IN YELLOW-OUT
AS INSTALLED	AS INSTALLED
DATE	DATE
BY (PRINT NAME)	BY (PRINT NAME)

PROPOSED D	PROPOSED M	PROPOSED Y	REVISIONS	D	C	COMPLETED D	COMPLETED M	COMPLETED Y	C
			PLAN REDRAWN			13	03	14	MAB
			FIELD CHECK			29	07	15	JBF
13	03	14	PTC UPGRADE	BSH	MAB				
29	07	15	XR RELAY WIRING CHANGE	JBF	TPF				

REGION SOUTHERN

SUB. CHAMPAIGN 341

SIGNALS AND COMMUNICATIONS HOMEWOOD

13 OCTOBER 2000

DES. HARMON

CH.

HXP-3 APPLICATION INFO.

EFFINGHAM, IL

RICKELMAN AVE

CHA-196.80-14

16

DOT# 289 178A

cha-196.80-16.dgn
24-SEP-2015

SIEMENS INDUSTRY INC

DES.: BSH	DATE: 03/13/14	JOB NO.: JXXE04655	
CKD.: MAB	ISSUE DATE: N/A	EST. NO.: 1QDE000258	
DRN.: BSH	PLAN NO.: N/A	SHEET 16 OF 39	
P TIME: 13:46	P DATE: $$PLOT_DATE	CAD ID.: CHA-196.80-16	

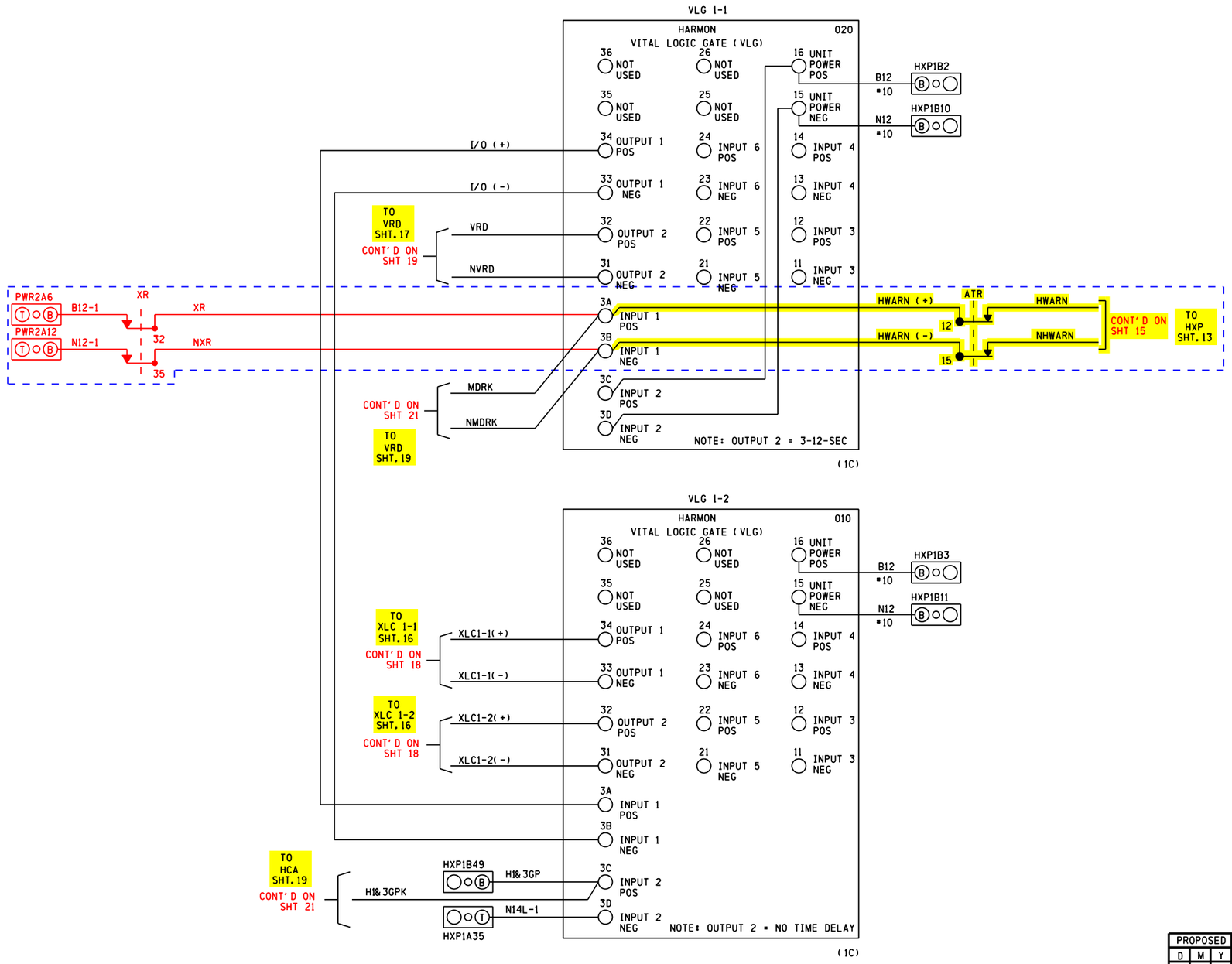

NOTES:
1. ALL WIRING #16 AWG UNLESS OTHERWISE NOTED
2. TERMINAL DESIGNATIONS:
   HXP1A1 = HXP RACK #1, WAGO STRIP A, TERMINAL 1
   SP1A1 = SURGE PANEL RACK #1, COLUMN A, TERMINAL 1
   PWR1A1 = POWER RACK #1, WAGO STRIP A, TERMINAL 1

REVISIONS				
NO.	DATE	BY	DESCRIPTION	APP. BY
1				
2				
3				
4				
5				

SIEMENS INDUSTRY INC

DES.: BSH	DATE: 03/13/14	JOB NO.: JXXE04655	
CKD.: MAB	ISSUE DATE: N/A	EST. NO.: #DIE000258	
DRN.: BSH	PLAN NO.: N/A	SHEET 17 OF 39	
P TIME: 13:46	P DATE: $$PLOT_DATE	CAD ID.: CHA-196.80-17	

cha-196.80-17.dgn
24-SEP-2015

DENOTES PROPOSAL 15-0213
REVISION 29/07/15

SII 13 MAR 2014

PROPOSED	PROPOSED
DESIGN NO. 15-0213	DESIGN NO. PTC-003
RED-IN YELLOW-OUT	RED-IN YELLOW-OUT
AS INSTALLED	AS INSTALLED
DATE	DATE
BY (PRINT NAME)	BY (PRINT NAME)

PROPOSED D	M	Y	REVISIONS	D	C	COMPLETED D	M	Y	C
			PLAN REDRAWN			13	03	14	MAB
13	03	14	PTC UPGRADE	BSH	MAB				
29	07	15	XR RELAY WIRING CHANGE	JBF	TPF				

REGION SOUTHERN
SUB. CHAMPAIGN 341

SIGNALS AND COMMUNICATIONS HOMEWOOD
13 OCTOBER 2000
DES. HARMON
CH.

VITAL LOGIC GATES

EFFINGHAM, IL
RICKELMAN AVE

CHA-196.80-15 17

DOT# 289 178A

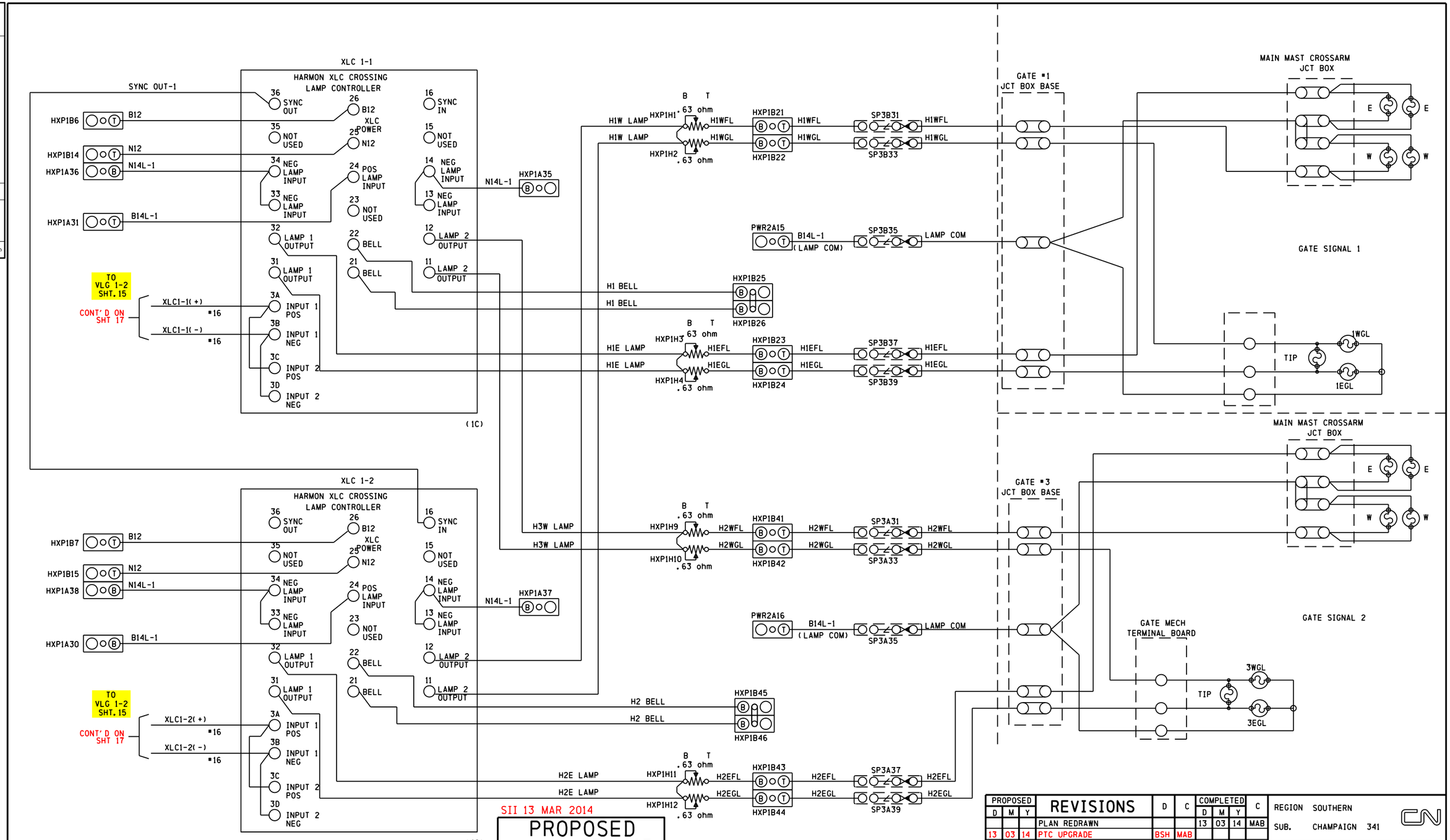

NOTES:
1. ALL WIRING #10 AWG UNLESS OTHERWISE NOTED
2. TERMINAL DESIGNATIONS:
   HXP1A1 = HXP RACK #1, WAGO STRIP A, TERMINAL 1
   SP1A1 = SURGE PANEL RACK #1, COLUMN A, TERMINAL 1
   PWR1A1 = POWER RACK #1, WAGO STRIP A, TERMINAL 1

SII 13 MAR 2014

PROPOSED
DESIGN NO. PTC-003
RED-IN YELLOW-OUT

AS INSTALLED
DATE
BY
(PRINT NAME)

REVISIONS								
PROPOSED D	M	Y		D	C	COMPLETED D	M	Y	C
			PLAN REDRAWN			13	03	14	MAB
13	03	14	PTC UPGRADE	BSH	MAB				

REGION SOUTHERN
SUB. CHAMPAIGN 341
CN
SIGNALS AND COMMUNICATIONS HOMEWOOD
13 OCTOBER 2000
DES. HARMON
CH.
FLASHER CONTROL CIRCUITS
EFFINGHAM, IL
RICKELMAN AVE
CHA-196.80-16 18
DOT# 289 178A

REVISIONS			
NO.	DATE	BY	DESCRIPTION	APP. BY
1				
2				
3				
4				
5				

SIEMENS INDUSTRY INC
DES.: BSH DATE: 03/13/14 JOB NO.: JXXE04655
CKD.: MAB ISSUE DATE: N/A EST. NO.: 4DE000258
DRN.: BSH PLAN NO.: N/A SHEET 18 OF 39
P TIME: 13:46 P DATE: $$PLOT_DATE CAD ID.: CHA-196.80-18

cha-196.80-18.dgn
24-SEP-2015

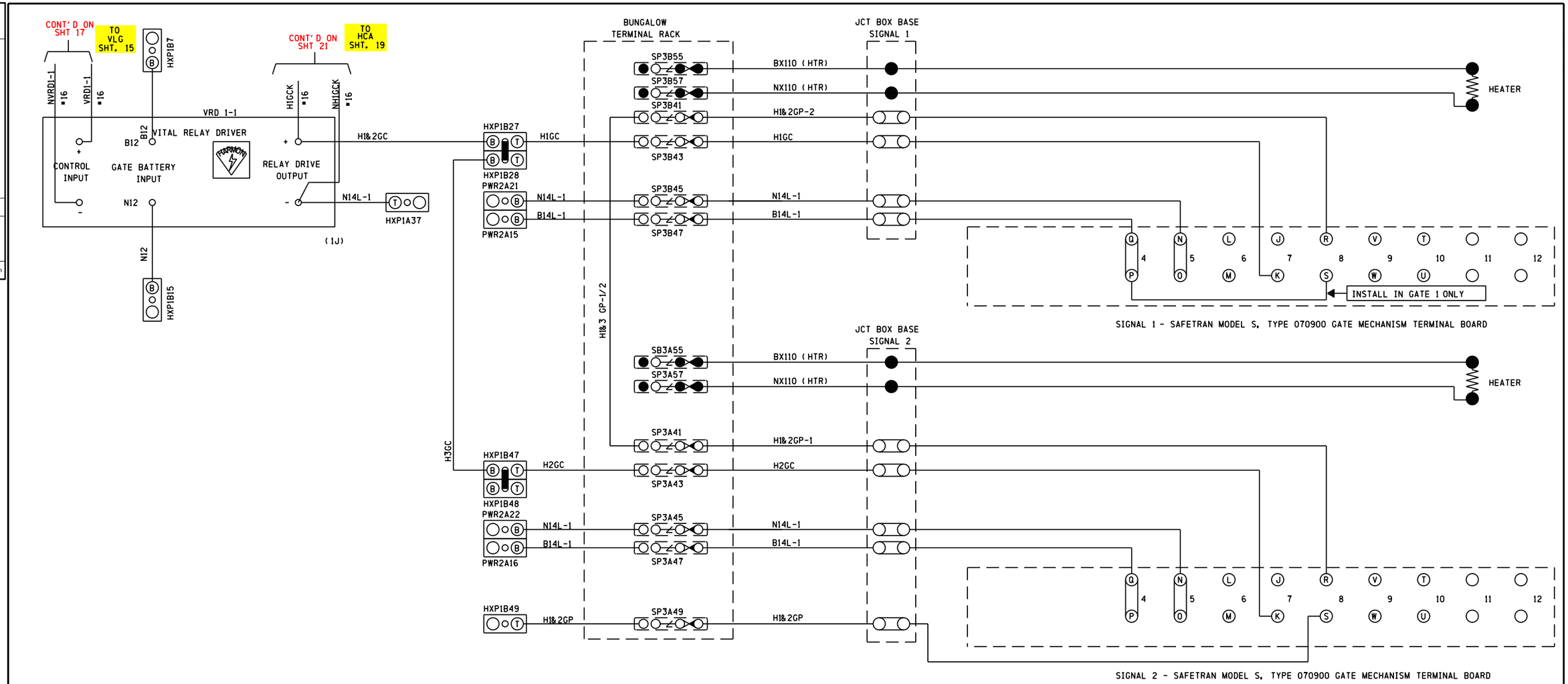

cha-196.80-19.dgn
24-SEP-2015

REVISIONS

NO.	DATE	BY	DESCRIPTION	APP. BY
1				
2				
3				
4				
5				

SIEMENS INDUSTRY INC

DES.: BSH	DATE: 03/13/14	JOB NO.: JXXE04655	
CKD.: MAB	ISSUE DATE: N/A	EST. NO.: 0DE000258	
DRN.: BSH	PLAN NO.: N/A	SHEET 19 OF 39	
P TIME: 13:46	P DATE: $$PLOT_DATE	CAD ID.: CHA-196.80-19	

NOTES:

ALL WIRE THIS SHEET #10 AWG UNLESS OTHERWISE NOTED.
● =INSULATED NUT

SII 13 MAR 2014

PROPOSED
DESIGN NO. PTC-003
RED-IN YELLOW-OUT

AS INSTALLED
DATE _____
BY _____
(PRINT NAME)

PROPOSED D	PROPOSED M	PROPOSED Y	REVISIONS	D	C	COMPLETED D	COMPLETED M	COMPLETED Y	C
			PLAN REDRAWN			13	03	14	MAB
13	03	14	PTC UPGRADE	BSH	MAB				

REGION SOUTHERN
SUB. CHAMPAIGN 341

SIGNALS AND COMMUNICATIONS HOMEWOOD
13 OCTOBER 2000
DES. HARMON
CH.
GATE CONTROL CKTS.
EFFINGHAM, IL
RICKELMAN AVE

CHA-196.80-17

DOT# 289 178A