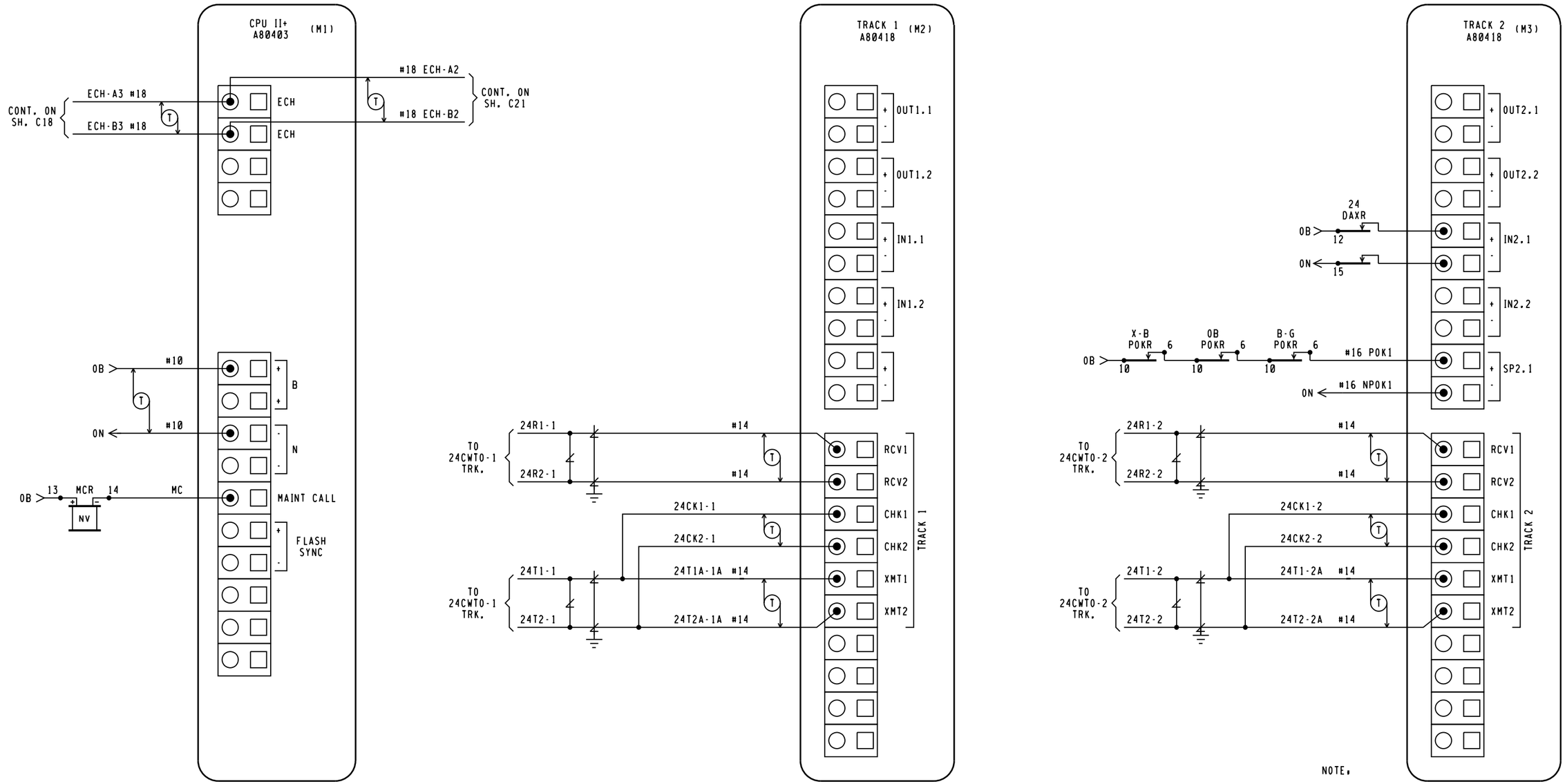

NOTE.

ECHELON CONNECTIONS NOT TO EXCEED 53' IN LENGTH AND TOTAL LENGTH COMBINED NOT TO EXCEED 430' WITH A MAXIMUM OF 8 NODES. RECOMMEND USE BELDEN WIRE CABLE #8461 OR EQUIVALENT.

CROSSING
6'X 6' PTC RELAY HOUSE

NEW WORK
CWM1435882 IL2014024
10-13-14 XRL/JM/
xorail

CSX TRANSPORTATION
RAIL TRANSPORT GROUP ENGINEERING
COMMUNICATIONS AND SIGNALS

CP 184 &

KING ROAD (XXXXXXX) & SW. 184.26
DETECTION CIRCUITRY CWE-24
SMITHBORO, IL M.P. OS-184.16

4000GCP.C03
REV. 11-30-08

DESIGNED	DIGITIZED	CHECKED	DATE
XRL	XRL	XRL	10-13-14

DESIGN DATE	REV. NO.	DRAWING	SHEET NO	FILE	SHEET
10-13-14	1	-----	-----	OS18416	C16

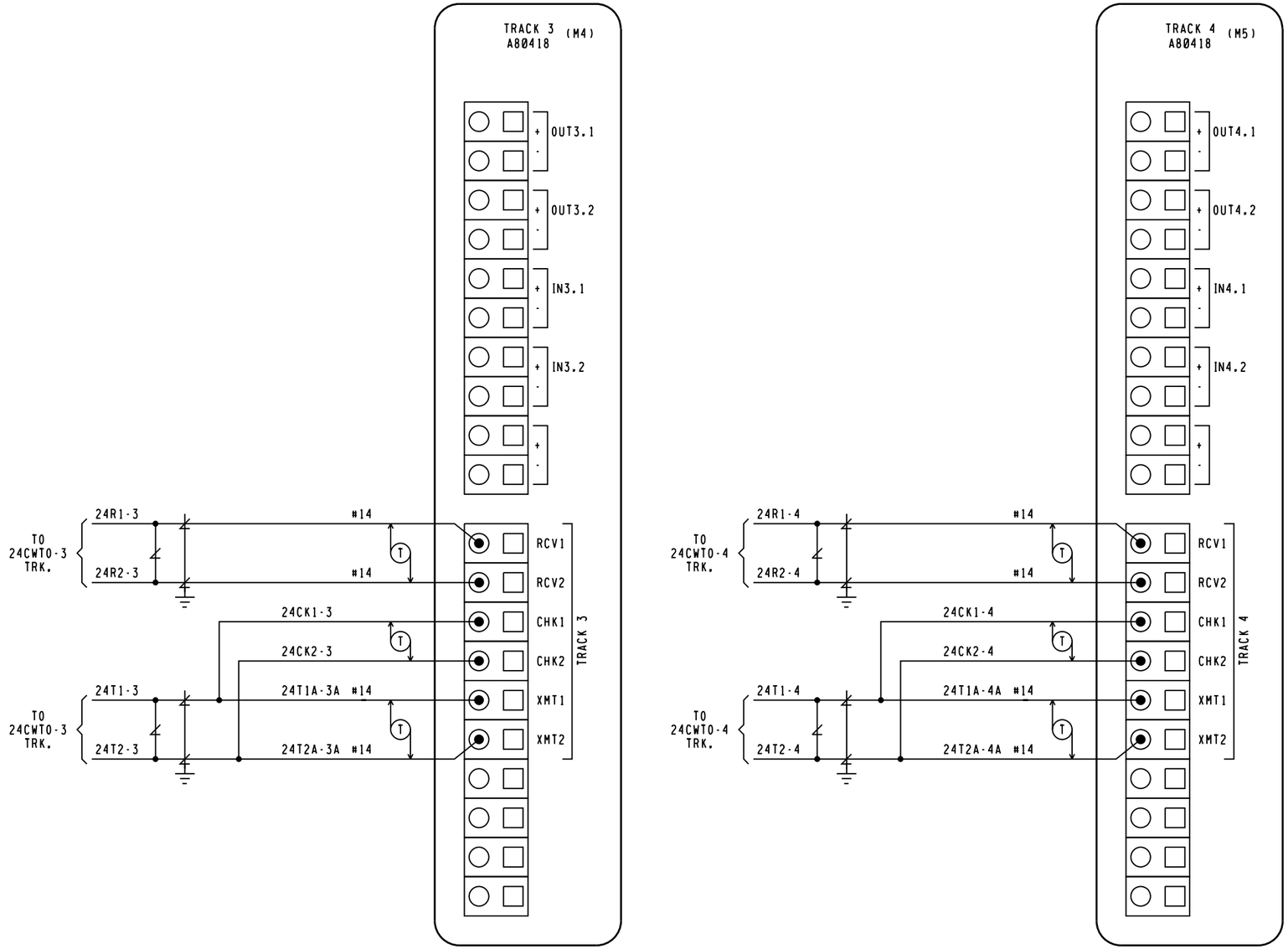

CROSSING
6'X 6' PTC RELAY HOUSE

NEW WORK
CWM1435882 IL2014024
10-13-14 XRL/JM/
xorail

CSX TRANSPORTATION
RAIL TRANSPORT GROUP ENGINEERING
COMMUNICATIONS AND SIGNALS

CP 184 &

KING ROAD (XXXXXXX) & SW. 184.26
DETECTION CIRCUITRY CWE-24
SMITHBORO, IL M.P. OS-184.16

4000GCP.C03
REV. 11-30-08

DESIGNED	DIGITIZED	CHECKED	DATE
XRL	XRL	XRL	10-13-14

DESIGN DATE	REV. NO.	DRAWING	SHEET NO	FILE	SHEET
10-13-14	1	-----	-----	OS18416	C17

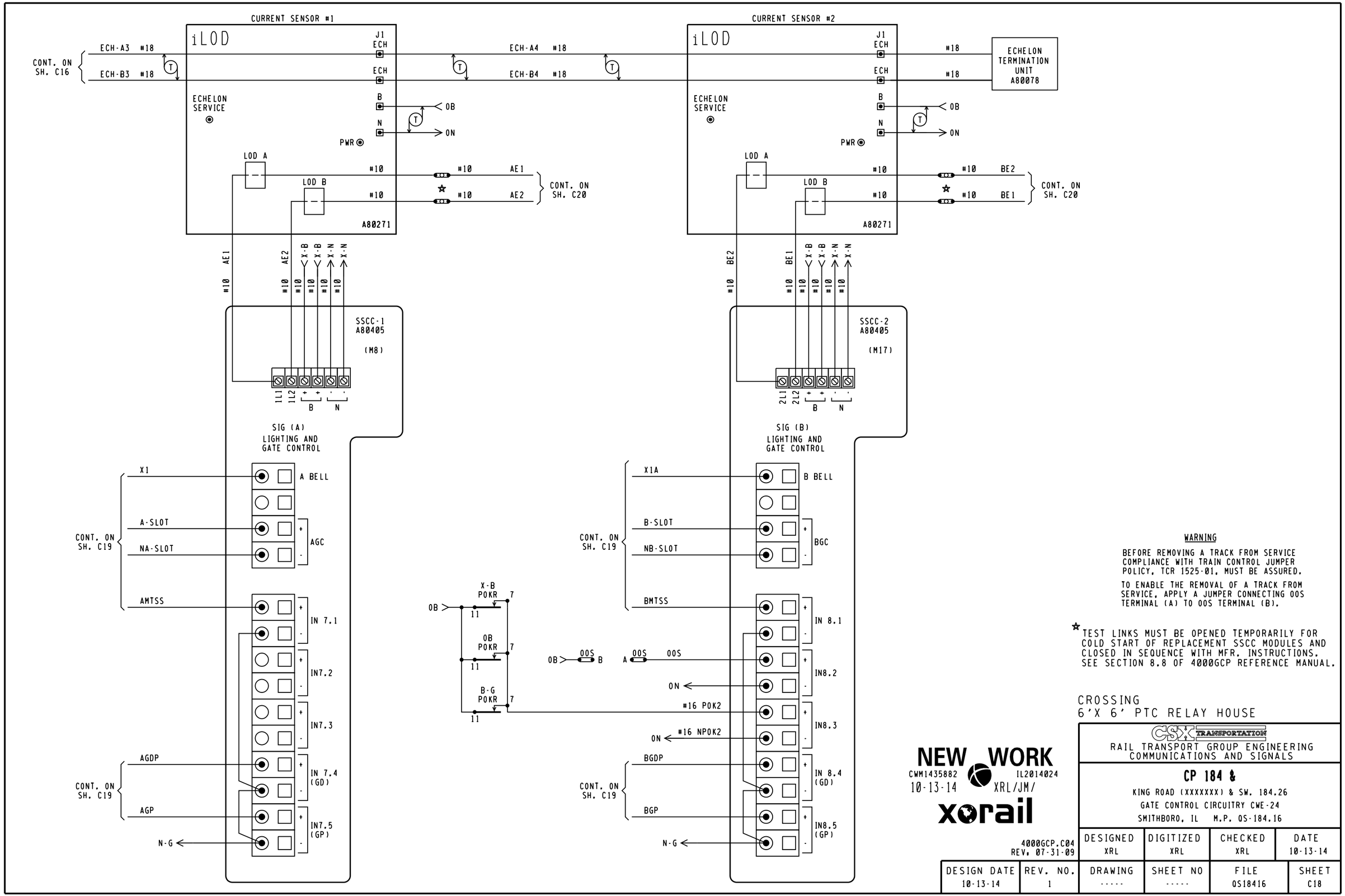
CURRENT SENSOR #1
iLOD
J1
ECH
ECH-A3 #18
ECH-B3 #18
CONT. ON
SH. C16
ECH-A4 #18
ECH-B4 #18
ECHELON
SERVICE
B
N
0B
0N
PWR
LOD A
LOD B
#10
AE1
AE2
CONT. ON
SH. C20
A80271
CURRENT SENSOR #2
ECHELON
TERMINATION
UNIT
A80078
BE2
BE1
X-B
X-N
SSCC-1
A80405
(M8)
SSCC-2
A80405
(M17)
1L1
1L2
2L1
2L2
SIG (A)
LIGHTING AND
GATE CONTROL
SIG (B)
X1
A BELL
A-SLOT
NA-SLOT
AGC
AMTSS
IN 7.1
IN7.2
IN7.3
AGDP
IN 7.4
(GD)
AGP
IN7.5
(GP)
N-G
X1A
B BELL
B-SLOT
NB-SLOT
BGC
BMTSS
IN 8.1
IN8.2
IN8.3
BGDP
IN 8.4
(GD)
BGP
IN8.5
(GP)
X-B
POKR
0B
POKR
B-G
POKR
00S
#16 POK2
#16 NPOK2
WARNING
BEFORE REMOVING A TRACK FROM SERVICE COMPLIANCE WITH TRAIN CONTROL JUMPER POLICY, TCR 1525-01, MUST BE ASSURED.
TO ENABLE THE REMOVAL OF A TRACK FROM SERVICE, APPLY A JUMPER CONNECTING 00S TERMINAL (A) TO 00S TERMINAL (B).
TEST LINKS MUST BE OPENED TEMPORARILY FOR COLD START OF REPLACEMENT SSCC MODULES AND CLOSED IN SEQUENCE WITH MFR. INSTRUCTIONS. SEE SECTION 8.8 OF 4000GCP REFERENCE MANUAL.
CROSSING
6'X 6' PTC RELAY HOUSE
NEW WORK
CWM1435882
IL2014024
10-13-14
XRL/JM/
xorail
CSX TRANSPORTATION
RAIL TRANSPORT GROUP ENGINEERING
COMMUNICATIONS AND SIGNALS
CP 184 &
KING ROAD (XXXXXXX) & SW. 184.26
GATE CONTROL CIRCUITRY CWE-24
SMITHBORO, IL M.P. OS-184.16
4000GCP.C04
REV. 07-31-09
DESIGNED XRL
DIGITIZED XRL
CHECKED XRL
DATE 10-13-14
DESIGN DATE 10-13-14
REV. NO. 1
DRAWING -----
SHEET NO -----
FILE OS18416
SHEET C18

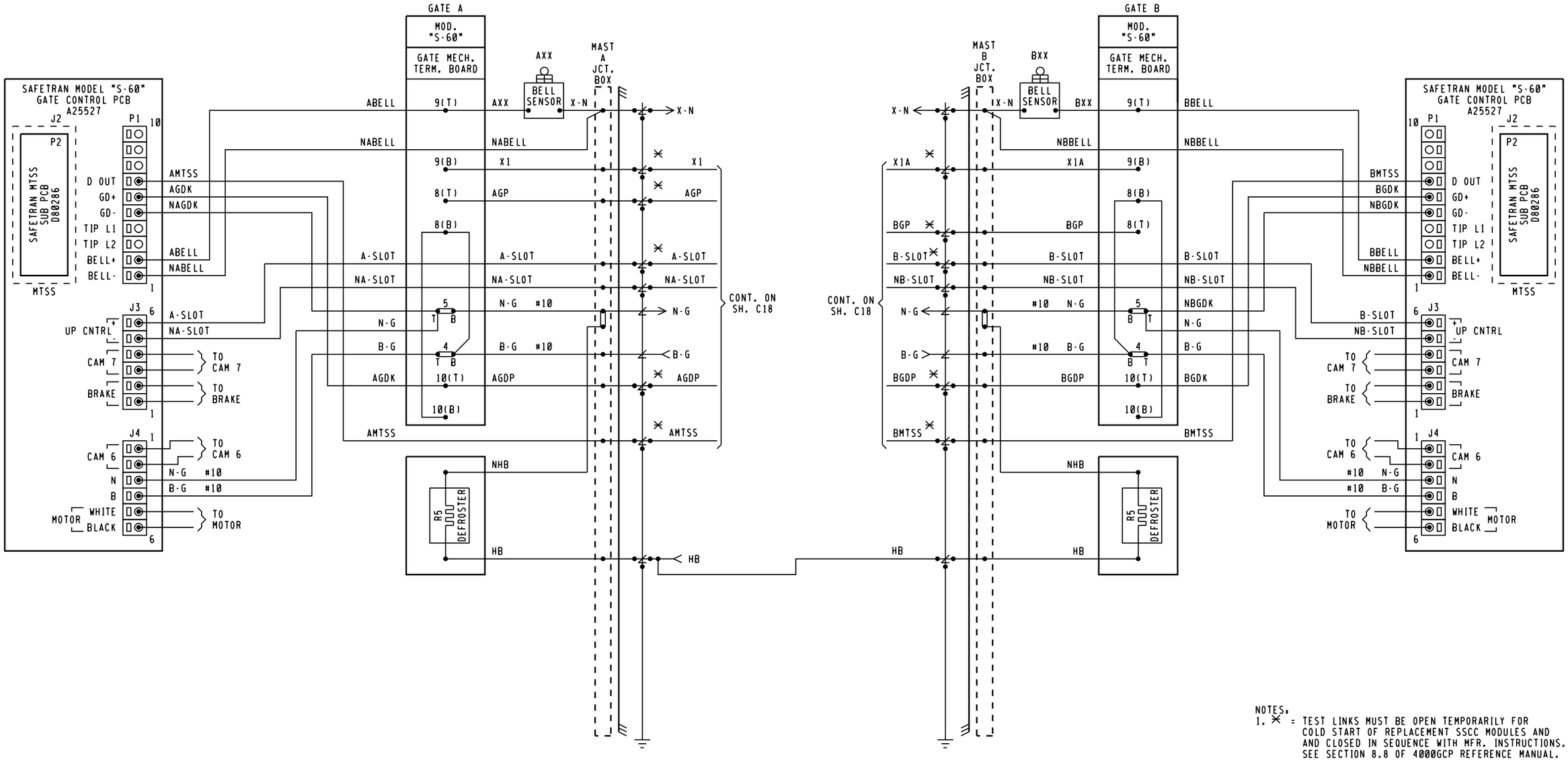

NOTES:
1. ✕ = TEST LINKS MUST BE OPEN TEMPORARILY FOR COLD START OF REPLACEMENT SSCC MODULES AND AND CLOSED IN SEQUENCE WITH MFR. INSTRUCTIONS. SEE SECTION 8.8 OF 4000GCP REFERENCE MANUAL.
2. = TERMINAL IN JCT. BOX BASE
3. ALL WIRING #16 UNLESS NOTED OTHERWISE.

CROSSING
6'X 6' PTC RELAY HOUSE

NEW WORK
CWM1435882 IL2014024
10-13-14 XRL/JM/
xorail

CSX TRANSPORTATION
RAIL TRANSPORT GROUP ENGINEERING
COMMUNICATIONS AND SIGNALS

CP 184 &

KING ROAD (XXXXXXX) & SW. 184.26
CROSSING WARNING DEVICE GATE CIRCUITRY
SMITHBORO, IL M.P. OS-184.16

4000GCP.C05
REV. 07-31-09

DESIGNED	DIGITIZED	CHECKED	DATE
XRL	XRL	XRL	10-13-14

DESIGN DATE	REV. NO.	DRAWING	SHEET NO	FILE	SHEET
10-13-14	1	-----	-----	OS18416	C19

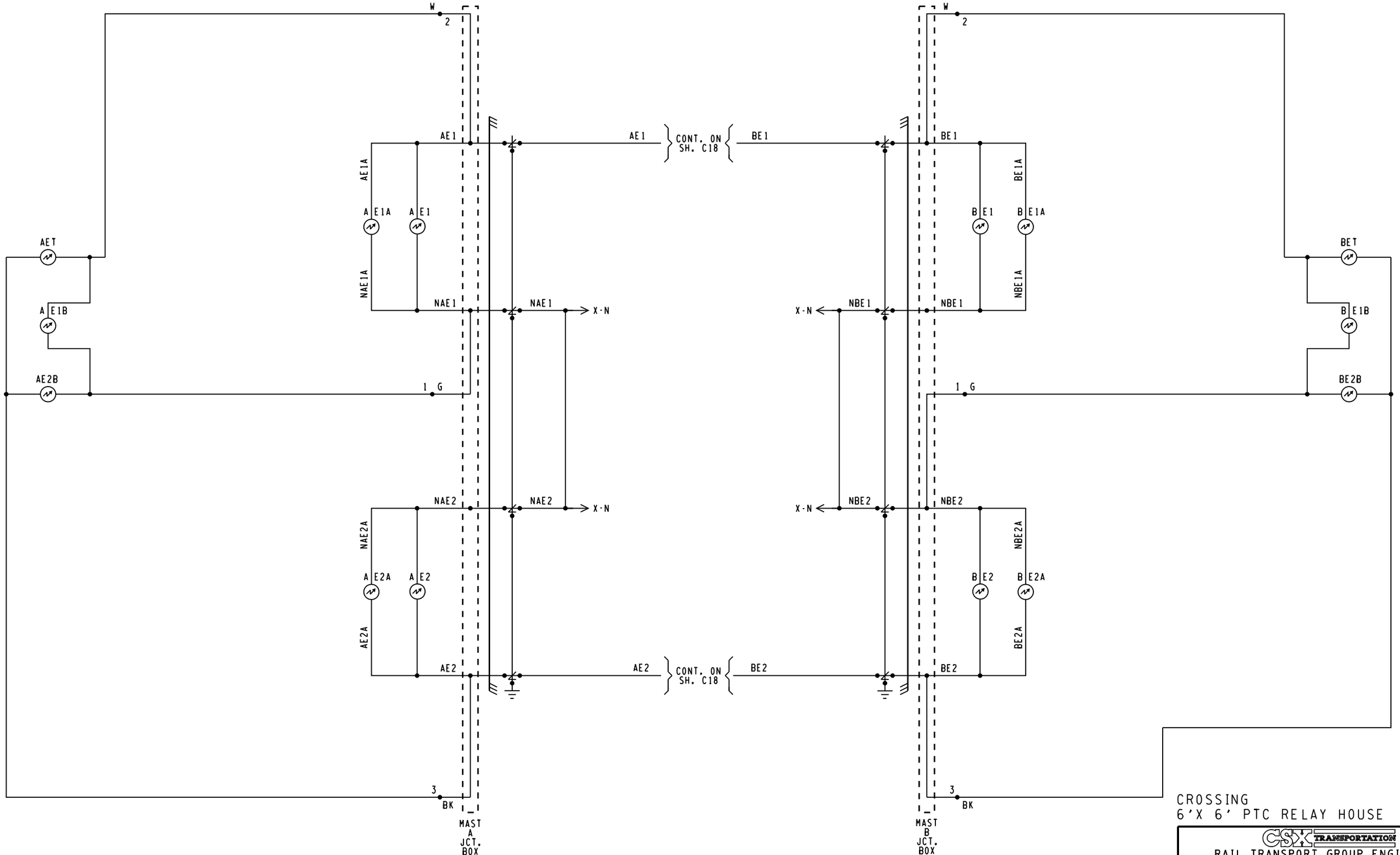

NOTES:

1. = TERMINAL IN JUNCTION BOX
2. WHEN 7 OR MORE LIGHTS ON A SINGLE STRUCTURE REFER TO SS382 FOR REQUIRED ARRESTERING
3. FEEDS TO ALL BUSSES AND LIGHT CIRCUITS ARE #10 FLEX
4. UNLESS NOTED ALL OTHER WIRING #16
5. CABLING SPECIFICATIONS SHOWN ON SH. S01

NEW WORK
CWM1435882 IL2014024
10-13-14 XRL/JM/
xorail

CROSSING
6'X 6' PTC RELAY HOUSE

CSX TRANSPORTATION
RAIL TRANSPORT GROUP ENGINEERING
COMMUNICATIONS AND SIGNALS

CP 184 &

KING ROAD (XXXXXXX) & SW. 184.26
CROSSING WARNING DEVICE LIGHT CIRCUITRY
SMITHBORO, IL M.P. OS-184.16

DESIGNED	DIGITIZED	CHECKED	DATE
XRL	XRL	XRL	10-13-14

DESIGN DATE	REV. NO.	DRAWING	SHEET NO	FILE	SHEET
10-13-14	1	-----	-----	OS18416	C20

WAYSIDE ACCESS GATEWAY CONFIGURATION	
SITE ATCS ADDRESS	7.125.412.010.16.01 7.125.LLL.GGG.SS.DD
SERIAL INTERFACE	38,400,NONE,8,1/NOFLOW
SERIAL FORMAT	RAW
WAG TEST MODE	DISABLED
ECHELON ADDRESS	01.07
UDP PORTS	5000, 5001, 5002, 5003
ROUTE TABLE EXPIRY	5400 SEC
BROADCAST MEDIUM	IP ETHERNET
TCP PORTS	23, 10023, 6001, 6002
DHCP SERVER	DISABLED
IP ADDRESS	192.168.13.1
TYPE 7 ROUTE LENGTH	12--7RRLLLGGGSS
IP NETWORK MASK	255.255.255.0
WAG CIRCUIT ID	DISABLE
ROUTING REGION DOMAIN 1	OCGSERVER1.JAX.COM
ATCS SERVER UDP PORT NUMBER	6001
TELNET NUMBERS	WAG 6002, SERIAL 10023
DEFAULT GATEWAY IP	192.168.013.031

NOTE TO INSPECTOR, AT INSTALLATION OF WAG, OR UPDATE OF THE CONFIGURATION, OR UPDATE OF THE EXECUTIVE PROGRAM, MARK-UP CONFIGURATION TABLE FOR AS IN SERVICE PLANS

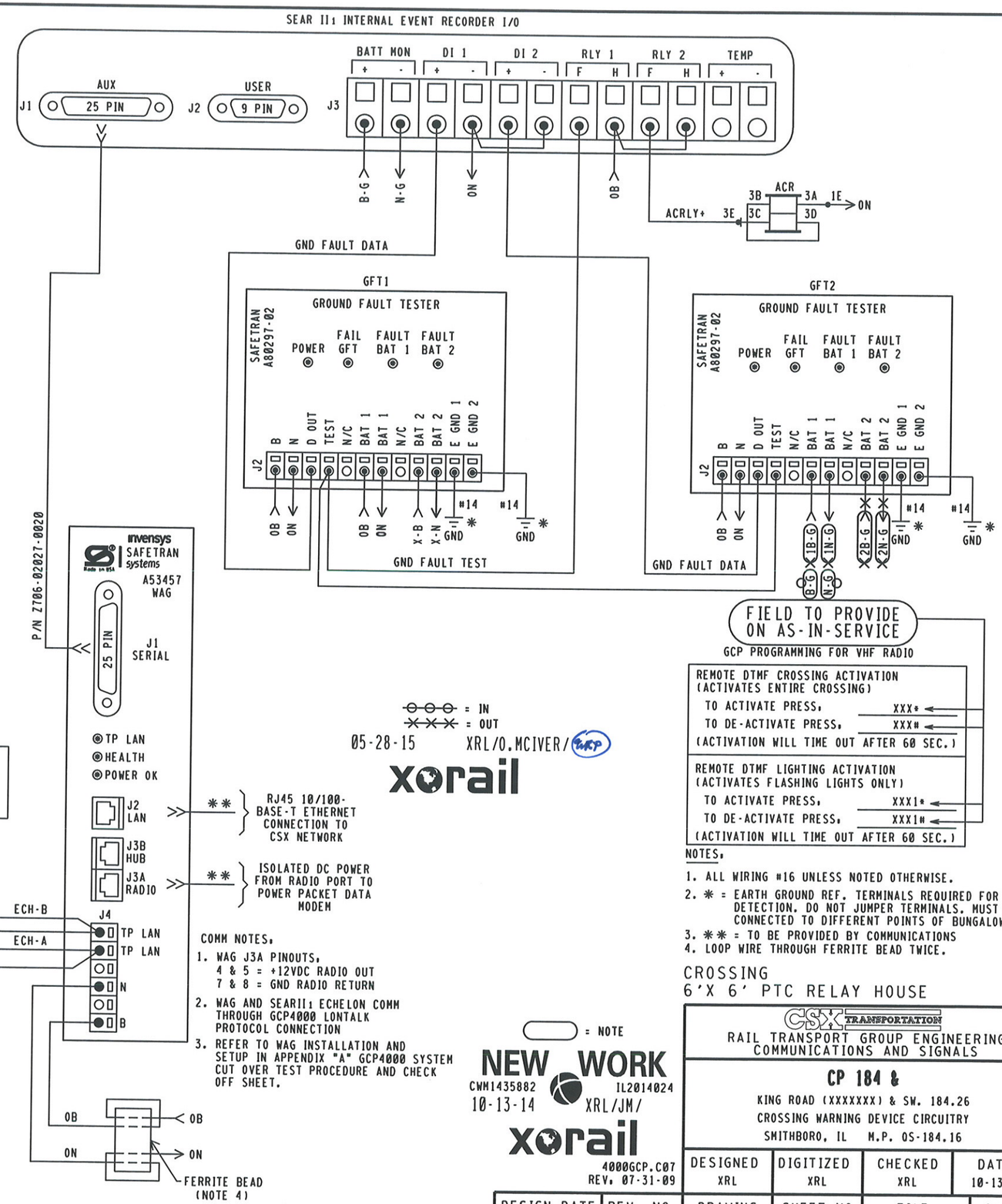

CROSSING
6'X 6' PTC RELAY HOUSE

CSX TRANSPORTATION
RAIL TRANSPORT GROUP ENGINEERING
COMMUNICATIONS AND SIGNALS

CP 184 &

KING ROAD (XXXXXXX) & SW. 184.26
CROSSING WARNING DEVICE CIRCUITRY
SMITHBORO, IL M.P. OS-184.16

DESIGNED	DIGITIZED	CHECKED	DATE
XRL	XRL	XRL	10-13-14

DESIGN DATE	REV. NO.	DRAWING	SHEET NO	FILE	SHEET
10-13-14	1	-----	-----	OS18416	C21

DEFAULTS AND/OR STYLE		FIELD RECORD
SEAR II1 EXECUTIVE PROGRAM	VERSION, 9V725A01	VERSION, _____
APPLICATION PROGRAM (IF LOADED)	VERSION, 9V864A01	VERSION, _____

NOTE TO INSPECTOR,
AT IN SERVICE OF SEAR II1 OR UPDATE OF ITS INTERNAL EXECUTIVE PROGRAM OR ITS CSXT APPLICATION PROGRAM, NOTE THE VERSION NUMBER OF EACH PROGRAM MUST IN THE BLANK FIELDS.

SITE SET UP MENU	
FUNCTION	LED DISPLAY
DATE/TIME	XX-XX-XXXX XX:XX:XX
AUTOMATIC DST ADJUSTMENT	YES
TIME ZONE	EASTERN
SITE NAME	KING ROAD
MILEPOST	QS-184.24
DOT NUMBER	XXXXXXX
TESTER TYPE	CROSSING
DATE FORMAT	MM-DD-YYYY
TEMP FORMAT	FAHRENHEIT
INDICATE HOLD (SEC)	0
INDICATE REFRESH (SEC)	60
SITE ATCS ADDRESS	7.125.412.010.99.01 (7.RRR.LLL.GGG.99.01)
SITE TYPE	COLLECTOR
OFFICE ADDRESS	2.125.00.0000 (2.RRR.NN.DDDD)
POLL ID	1
MODE	GEN/ATCS
WAMS XID	DISABLED
OFFICE COMM. DEVICE	■WAG (ECHELON) □DIRECT (RS232) □MCM (ECHELON) □MCM (RS232) □DIAL MODEM □S200 RADIO (RS422)
RADIO ATCS ADDR	7.125.412.020.07.01 (7.RRR.LLL.GGG.NN.01)
FIELD COMM. DEVICE	□WAG (ECHELON) ■NONE □VHF COMM. (ECHELON) □VHF COMM. (RS232) □SPREAD-SPECTRUM (RS232)
USER PORT BAUD	57,600
USER PORT DATA BITS	8
USER PORT PARITY	NONE
USER PORT STOP BITS	1
USER PORT FLOW CONTROL	NONE
AUX PORT BAUD	38,400
AUX PORT DATA BITS	8
AUX PORT PARITY	NONE
AUX PORT STOP BITS	1
AUX PORT FLOW CONTROL	NONE

FIELD TO PROVIDE ON AS-IN-SERVICE

INSPECTOR NOTE,
CURRENT VALUES MAY VARY DEPENDANT ON FIELD CONDITIONS, MARK UP PER ACTUAL READINGS FOR IN-SERVICE REVISION.

LIT BULB COUNT ON EACH CIRCUIT	NO.	TYPE OF BULB	CURRENT READING IN AMP. AT APPROX. 10.0 V ARRAY VOLTAGE
CURRENT SENSOR (1) AE1, LAMP SET UP	4	□BULBS ■LED	2.6
CURRENT SENSOR (1) AE2, LAMP SET UP	4	□BULBS ■LED	2.6
CURRENT SENSOR (2) BE1, LAMP SET UP	4	□BULBS ■LED	2.6
CURRENT SENSOR (2) BE2, LAMP SET UP	4	□BULBS ■LED	2.6

INSPECTOR NOTE,
VHF RADIO CHANNEL AND DATA CHANNEL = ENGINEERING CHANNEL. CHOOSE PROPER FREQUENCY FROM VHF RADIO CHANNELS.

VHF RADIO CHANNELS			
1	161.130	5	161.550
2	160.710	6	160.785
3	160.560	7	160.785
4	160.860	8	160.785

NOTE 7

MENU → CONFIGURATION → MODULES → ADD MODULE	
MODULE TYPE	WAG
MODULE NAME	DEFAULT
WAG ECHELON NODE	7

NOTE,
REFER TO WAG INSTALLATION AND SETUP IN APPENDIX "A" GCP4000 SYTEM CUT OVER, TEST PROCEDURE AND CHECK OFF SHEET.

MEASURE BATTERY VOLTAGE AT INPUT		
BATTERY VOLTAGE	0B	→ XX VOLTS
BATTERY VOLTAGE	X-B	→ XX VOLTS
BATTERY VOLTAGE	B-G	→ XX VOLTS

FIELD TO PROVIDE ON AS-IN-SERVICE

NOTE 6

PROGRAM MENU SELECT		
EDIT DIGITAL INPUTS	■ NO	□ YES
EDIT BATTERIES	■ NO	□ YES
EDIT RELAYS	■ NO	□ YES
EDIT TEST LED'S	■ NO	□ YES
EDIT ILOD1 SENSOR ☆	■ NO	□ YES
EDIT ILOD2 SENSOR ☆	■ NO	□ YES
EDIT ILOD3 SENSOR ☆	■ NO	□ YES
EDIT ILOD4 SENSOR ☆	■ NO	□ YES
EDIT VHF SETTINGS	■ NO	□ YES
GCP4K ATCS SUBNODE	16	

☆STAR = OPTIONS SHOWN DEPENDANT ON NUMBER OF ILODS SELECTED

	CONTROL SYSTEM CONFIGURATION MENU QUESTIONS	
	OPTION	SELECTION
NOTE 9 -	RESET NAMES / MODULES	NO ■ YES □
	RAILROAD NUMBER	125
	CROSSING CONFIGURATION	NORMAL ■ SPLIT GATE □ EXTERNAL ENTRANCE GATE CONTROLLER(S) □
	AND1 USED AS XR	NO □ YES ■
	AND2 USED AS XR	NO ■ YES □
	AND3 USED AS XR	NO ■ YES □
	AND4 USED AS XR	NO ■ YES □
	AND5 USED AS XR	NO ■ YES □
	AND6 USED AS XR	NO ■ YES □
	AND7 USED AS XR	NO ■ YES □
	AND8 USED AS XR	NO ■ YES □
	ENTRANCE GATES*	0 □ 1 □ 2 ■ 3 □ 4 □ 5 □ 6 □ 7 □ 8 □
	GATE POSITION FAIL*	20 SECS.
NOTE 8 -	BATTERY BANKS*	1 □ 2 ■ 3 □
	BATT MON USED*	NO □ YES ■
	OB RESOLUTION*	0.2 ■ 0.5 □ 1.0 □
	X-B RESOLUTION*	0.2 ■ 0.5 □ 1.0 □ NOT PRESENT □
	X-B2 RESOLUTION*	0.2 □ 0.5 □ 1.0 □ NOT PRESENT ■
	BATT MON RESOLUTION*	0.2 □ 0.5 □ 1.0 ■ NOT PRESENT □
	INTERNAL CROSSING CONTROLLERS*	0 □ 1 □ 2 ■
	EXTERNAL CROSSING CONTROLLERS*	0 ■ 1 □ 2 □
	VHF COMMUNICATOR*	YES ■ NO □
	DTMF ACTVATION*	YES ■ NO □
NOTE 1	ACTIVATION CODE	XXX
	ACTIVATION TIMEOUT	(60 SEC)
	1LOD MODULES*	0 □ 1 □ 2 ■ 3 □ 4 □
NOTE 2 -	ANY LED BULBS USED*	NO □ YES ■
	AUTO INSPECTIONS*	YES □ NO ■
	BELL SENSORS*	0 □ 1 □ 2 ■ 3 □ 4 □
NOTE 3	BELL SENSOR TSS 1*	NO □ YES ■
	BELL SENSOR TSS 2*	NO □ YES ■
	BELL SENSOR TSS 3*	NO ■ YES □
	BELL SENSOR TSS 4*	NO ■ YES □
	BELL SENSOR TSS 5*	NO ■ YES □
	BELL SENSOR TSS 6*	NO ■ YES □
	BELL SENSOR TSS 7*	NO ■ YES □
	BELL SENSOR TSS 8*	NO ■ YES □
	BELL ON*	GATES LOWERING ■ GATES MOVING □ ALWAYS □
	GFT'S	YES ■ NO □
	BATTERIES ON GFT1	1 □ 2 ■
NOTE 4 -	GATE TIP SENSORS*	YES □ NO ■
	RTU	NO ■ YES □
NOTE 5	VHF VOICE CHANNEL	1 □ 2 □ 3 □ 4 □ 5 □ 6 □ 7 □ 8 □
	VHF DATA CHANNEL	1 □ 2 □ 3 □ 4 □ 5 □ 6 □ 7 □ 8 □
	USE NON-CRITICAL FEATURE*	NO ■ YES □
	FULL APPROACH MOVE ALARMS*	ACTIVATE ■ DO NOT ACTIVATE □
	ENABLE PASSWORD	NO ■ YES □

NOTES,

1. OPTION AVAILABLE IF VHF COMMUNICATOR = YES LAST 3 DIGITS OF DOT NUMBER.
2. OPTION AVAILABLE IF 1LODS.
3. OPTION AVAILABLE IF BELL SENSORS.
4. OPTION AVAILABLE IF GATES.
5. OPTION AVAILABLE IF VHF RADIO.
6. ONLY YES IN SPECIAL CIRCUMSTANCES.
7. SELECT "MENU" THEN "CONFIGURATION" FROM SEAR II INTERFACE KEYPAD TO ACCESS MODULE CONFIGURATION MENU.
8. BATTERY BANKS* = NUMBER OF BANKS EXCLUDING THE BANK APPLIED TO THE BAT MON SEAR INPUT
9. YES ON INITIAL SETUP

( ) = NOTE

NEW WORK
CWM1435882 IL2014024
10-13-14 XRL/JM/
xorail
4000GCP.C07
REV. 07-31-09

CSX TRANSPORTATION
RAIL TRANSPORT GROUP ENGINEERING
COMMUNICATIONS AND SIGNALS

CP 184 &
KING ROAD (XXXXXXX) & SW. 184.26
SEAR II1 CONFIGURATION & FUNCTIONS
SMITHBORO, IL M.P. QS-184.16

DESIGNED	DIGITIZED	CHECKED	DATE
XRL	XRL	XRL	10-13-14

CROSSING
6'X 6' PTC RELAY HOUSE

DESIGN DATE	REV. NO.	DRAWING	SHEET NO	FILE	SHEET
10-13-14	1	-----	-----	QS18416	C22

INDEX

CONTENTS

SH. NO.	CONTENTS	REVISION NO. 1	2	3	4	5	6	7	8	9
I01	TITLE, NOTES, INDEX AND REVISIONS	X	X	⊘	⊠					
S01	TRACK AND SIGNAL PLAN	X	X	⊘	⊠					
G01	ELECTROLOGIXS UNIT 1TZU MODULE CONNECTOR USAGE		X							
E02	G02 ELECTROLOGIXS UNIT 1TZU HARDWARE CONFIGURATION	X	X	⊘	⊠					
G03	ELECTROLOGIXS UNIT 1TZU CHASSIS ID AND VITAL CONFIGURATION SETTINGS		X							
E01	POWER DISTRIBUTION (6'X 6' RELAY HOUSE)	X	X	⊘	⊠					
C01	ELECTROLOGIXS UNIT 1TZU TRACK AND VITAL I/O	X	X		⊠					
C02	ELECTROLOGIXS UNIT ITZU SIGNAL LIGHTING CIRCUITS AND NON VITAL I/O	X	X							
P01	ELECTROLOGIXS PROGRAM				/					

X = DESIGN COMPLETED

X = REVISION COMPLETED

REVISIONS

REV. NO.	PROJECT NO.	DESIGN DATE	IN SERVICE DATE	REVISION DATE
1	IL2010024	09-29-10	01-17-11	03-23-11
2	IL2010004	07-23-10	08-09-11	11-01-11
3	IL2014036	10-09-14	-----	-----
4	IL2014024	10-13-14		

TO BE COMPLETED ON A.I.S.

THIS PLAN DOES ☐ DOES NOT ☒
SUPERSEDE PLAN DATED 10-09-14
CSX PROJECT # IL2014036

= IN

= OUT

CWM1435882 IL2014024
10-13-14 XRL/JM/

xorail

= NOTE

= IN

= OUT

CWM1437222 IL2014036
10-09-14 XRL/BDB/

xorail

CSX TRANSPORTATION
RAIL TRANSPORT GROUP ENGINEERING
COMMUNICATIONS AND SIGNALS

CUT SECTION

SIGNALS 183W & 183E

TITLE, NOTES, INDEX AND REVISIONS
SMITHBORO, IL M.P. OS-183.80

10-13-14
10-09-14

4
3

DESIGN DATE	REV. NO.	DESIGNED	DIGITIZED	CHECKED	DATE
-----	2	GET/WJB	GET/SAT	GET/JMA	07-23-10
		DRAWING	SHEET NO	FILE	SHEET
		-----	-----	OS18380	I01

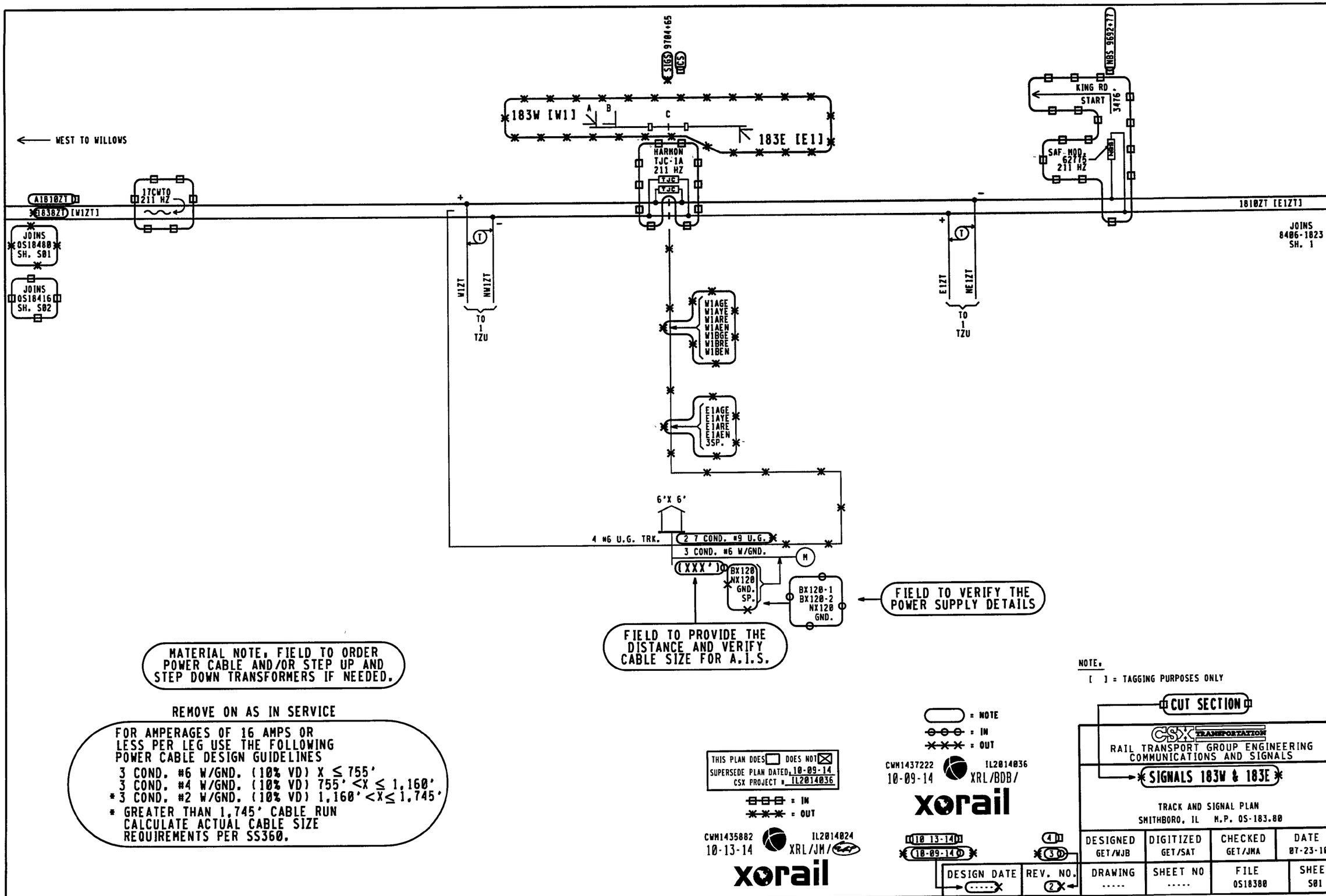

WEST TO WILLOWS
A1810ZT
1838ZT [W1ZT]
17CWTO 211 HZ
JOINS OS18480 SH. S01
JOINS OS18416 SH. S02
183W [W1]
A
B
C
183E [E1]
HARMON TJC-1A 211 HZ
TJC
SIGS 9784+65
UCS
NBS 9692+77
KING RD
START
3476'
SAF-MOD 62775 211 HZ
1810ZT [E1ZT]
JOINS 8406-1823 SH. 1
W1ZT
NW1ZT
TO 1 TZU
E1ZT
NE1ZT
W1AGE
W1AYE
W1ARE
W1AEN
W1BGE
W1BRE
W1BEN
E1AGE
E1AYE
E1ARE
E1AEN
3SP.
6'X 6'
4 #6 U.G. TRK.
2 7 COND. #9 U.G.
3 COND. #6 W/GND.
M
(XXX')
BX120
NX120
GND.
SP.
BX120-1
BX120-2
NX120
GND.
FIELD TO VERIFY THE POWER SUPPLY DETAILS
FIELD TO PROVIDE THE DISTANCE AND VERIFY CABLE SIZE FOR A.I.S.
MATERIAL NOTE: FIELD TO ORDER POWER CABLE AND/OR STEP UP AND STEP DOWN TRANSFORMERS IF NEEDED.
REMOVE ON AS IN SERVICE
FOR AMPERAGES OF 16 AMPS OR LESS PER LEG USE THE FOLLOWING POWER CABLE DESIGN GUIDELINES
3 COND. #6 W/GND. (10% VD) X ≤ 755'
3 COND. #4 W/GND. (10% VD) 755' <X ≤ 1,160'
* 3 COND. #2 W/GND. (10% VD) 1,160' <X ≤ 1,745'
* GREATER THAN 1,745' CABLE RUN CALCULATE ACTUAL CABLE SIZE REQUIREMENTS PER SS360.
NOTE:
[ ] = TAGGING PURPOSES ONLY
CUT SECTION
= NOTE
= IN
= OUT
THIS PLAN DOES DOES NOT
SUPERSEDE PLAN DATED 10-09-14
CSX PROJECT # IL2014036
= IN
= OUT
CWM1435882 10-13-14 IL2014024 XRL/JM/
xorail
CWM1437222 10-09-14 IL2014036 XRL/BDB/
xorail
10 13-14
10-09-14
4
3
DESIGN DATE
REV. NO.
2
CSX TRANSPORTATION
RAIL TRANSPORT GROUP ENGINEERING
COMMUNICATIONS AND SIGNALS
SIGNALS 183W & 183E
TRACK AND SIGNAL PLAN
SMITHBORO, IL M.P. OS-183.80
DESIGNED GET/WJB
DIGITIZED GET/SAT
CHECKED GET/JMA
DATE 07-23-10
DRAWING
SHEET NO
FILE OS18380
SHEET S01

VITAL APPLICATION INFORMATION

ITEM	SETTING
NAME	CSX1RPT4_VX
CHASSIS ID	248
INDEX	001
EPT CRC	XXXX
EPT CHECKSUM	XXXX

FIELD TO PROVIDE ON A.I.S.

VITAL SELECTION SETTINGS

SETT.	BIT NAME	TRUE	FALSE	BIT MEANING	
1	N_W1MCODE		X	TRUE IF MAINTENANCE CODE WILL BE RECEIVED FROM THE NORTH/WEST AND WILL BE PASSED SOUTH/EAST. FALSE IF NO MAINTENANCE CODE IS RECEIVED FROM THE NORTH/WEST AND IT IS TO BE INITIATED TO THE SOUTH/EAST.	*
2	S_E1MCODE	X		TRUE IF MAINTENANCE CODE WILL BE RECEIVED FROM THE SOUTH/EAST AND WILL BE PASSED NORTH/WEST. FALSE IF NO MAINTENANCE CODE IS RECEIVED FROM THE SOUTH/EAST AND IT IS TO BE INITIATED TO THE NORTH/WEST.	*
3	N_W1C1SW		X	(FOR SETTING, SEE CHART BELOW)	*
4	N_W1C5SW	X		(FOR SETTING, SEE CHART BELOW)	*
5	S_E1C1SW		X	(FOR SETTING, SEE CHART BELOW)	*
6	S_E1C5SW		X	(FOR SETTING, SEE CHART BELOW)	*
7	BDEO__MODE1		X	TRUE WHEN LIMITED TUMBLEDOWN (BDEO) MODE REQUIRED. FALSE WHEN TRADITIONAL TUMBLEDOWN (TMDAT) MODE REQUIRED.	*
8	SLOT3__ON		X	TRUE WHEN SLOT 3 IS BEING USED FOR ELECTRIC LOCK. FALSE WHEN SLOT 3 IS NOT USED FOR ELECTRIC LOCK.	*
9	S_EPOK	X		SETTING 9 TRUE AND SETTING 10 FALSE MAINTENANCE CODE FOR BLOCK POWER-OFF INDICATION WILL BE TRANSMITTED INTO THE SOUTH/EAST TRACK. IF BOTH SETTING ARE TRUE OR BOTH FALSE MAINTENANCE CODE WILL NOT BE TRANSMITTED IN EITHER DIRECTION.	*
10	N_WPOK		X	SETTING 9 FALSE AND SETTING 10 TRUE MAINTENANCE CODE FOR BLOCK POWER-OFF INDICATION WILL BE TRANSMITTED INTO THE NORTH/WEST TRACK. IF BOTH SETTING ARE TRUE OR BOTH FALSE MAINTENANCE CODE WILL NOT BE TRANSMITTED IN EITHER DIRECTION.	*

GFD-1 SETTINGS

ITEM	SETTING	
BATTERY 1 NAME	B-1	*
BATTERY 1 FAULT STATUS	NO FAULT	*
BATTERY 1 CALIBRATED VOLTAGE	13.5	*
BATTERY 1 GROUND FAULT THRESHOLD	8	*
BATTERY 1 GROUND FAULT TIME	30	*
BATTERY 1 LOW BATTERY ALARM VOLTAGE	8.0	*
BATTERY 1 HIGH BATTERY ALARM VOLTAGE	16.5	*
BATTERY 2 NAME	NONE	*
BATTERY 2 FAULT STATUS	NO FAULT	*
BATTERY 2 CALIBRATED VOLTAGE	13.5	*
BATTERY 2 GROUND FAULT THRESHOLD	8	*
BATTERY 2 GROUND FAULT TIME	30	*
BATTERY 2 LOW BATTERY ALARM VOLTAGE	8.0	*
BATTERY 2 HIGH BATTERY ALARM VOLTAGE	16.5	*
BATTERY 3 NAME	NONE	*
BATTERY 3 FAULT STATUS	NO FAULT	*
BATTERY 3 CALIBRATED VOLTAGE	13.5	*
BATTERY 3 GROUND FAULT THRESHOLD	8	*
BATTERY 3 GROUND FAULT TIME	30	*
BATTERY 3 LOW BATTERY ALARM VOLTAGE	8.0	*
BATTERY 3 HIGH BATTERY ALARM VOLTAGE	16.5	*

NOTES:

1. * = STATUS SET/CHANGED USING THE CDU-1. ALL OTHERS SET IN THE ACE PROGRAM.
2. VPM-3 ETHERNET PORT ENET1 IP ADDRESS IS 192.168.0.11. ENET2 IS 192.168.1.12.
3. X = TO BE FILLED OUT DURING FIELD/FACTORY TESTING.

CHART FOR SETTING CODE 5

SETTING COMBINATION	RESULTANT
N_WC1SW TRUE AND N_WC5SW - FALSE	CODE 1 IN SOUTH/EAST, CODE 5 OUT NORTH/WEST
N_WC1SW FALSE AND N_WC5SW - TRUE	CODE 5 IN SOUTH/EAST, CODE 5 OUT NORTH/WEST
N_WC1SW - FALSE AND N_WC5SW - FALSE	CODE 5 NOT TRANSMITTED NORTH/WEST
N_WC1SW - TRUE AND N_WC5SW - TRUE	CODE 5 TRANSMITTED NORTH/WEST CONTINUOUSLY
S_EC1SW - TRUE AND S_EC5SW - FALSE	CODE 1 IN NORTH/WEST, CODE 5 OUT SOUTH/EAST
S_EC1SW - FALSE AND S_EC5SW - TRUE	CODE 5 IN NORTH/WEST, CODE 5 OUT SOUTH/EAST
S_EC1SW - FALSE AND S_EC5SW - FALSE	CODE 5 NOT TRANSMITTED SOUTH/EAST
S_EC1SW - TRUE AND S_EC5SW - TRUE	CODE 5 TRANSMITTED SOUTH/EAST CONTINUOUSLY

= NOTE

NEW WORK
CWM1435882 IL2014024
10-13-14 XRL/JM /
xorail

1TREPELX.P01A
REV. 08-05-14

CSX TRANSPORTATION
RAIL TRANSPORT GROUP ENGINEERING
COMMUNICATIONS AND SIGNALS

CUT SECTION

ELECTROLOGIXS PROGRAM
SMITHBORO, IL M.P. OS 183.80

DESIGNED	DIGITIZED	CHECKED	DATE
XRL	XRL	XRL	10-13-14

DESIGN DATE	REV. NO.	DRAWING	SHEET NO	FILE	SHEET
10-13-14	4	-----	-----	OS10380	P01

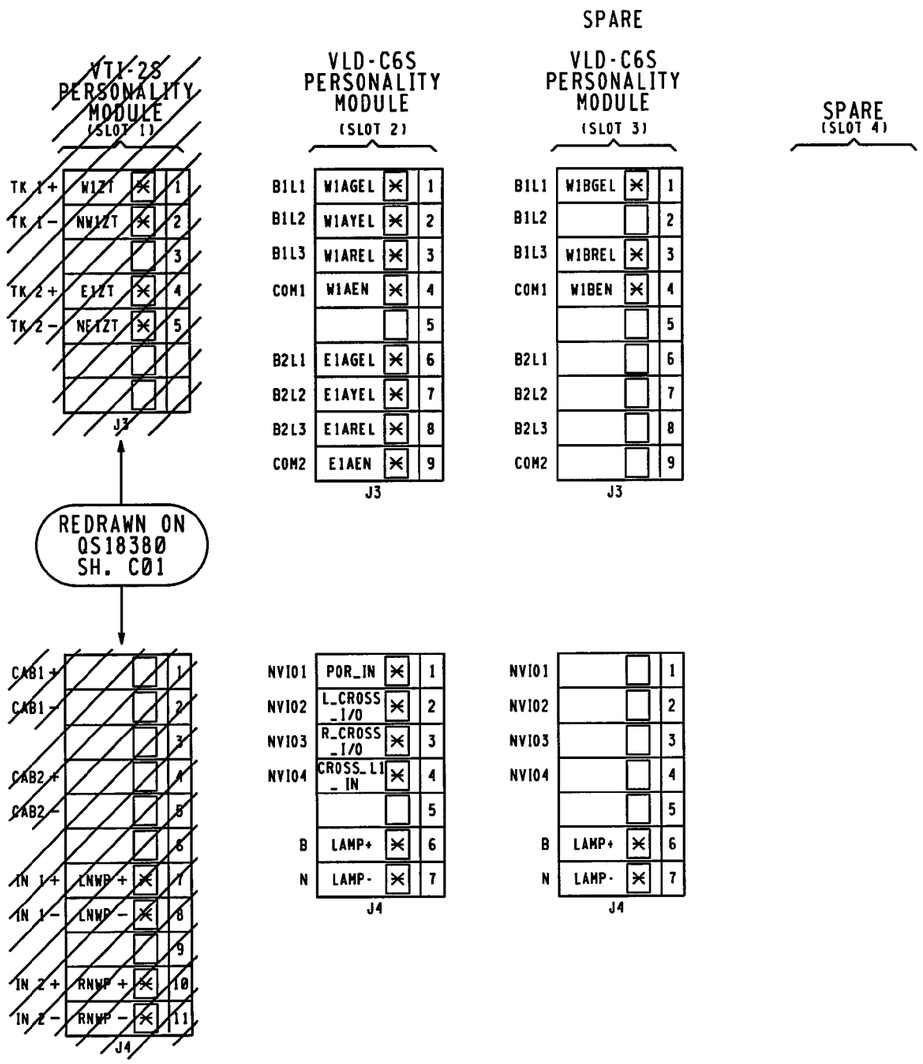

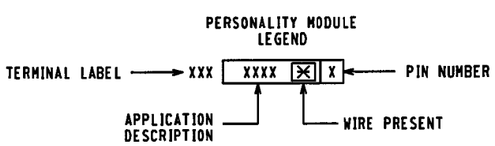

= NOTE

//// = SHOWN ELSEWHERE

ALL ELSE OUT THIS SHEET IS VOID WHEN AS IN SERVICED.

CWM1435882 IL2014024
10-13-14 XRL/JM/

xorail

NO CHANGES
CWM1437222 IL2014036
10-09-14 XRL/BDB/

xorail

ELECTROLOGIXS UNIT 1TZU

CSX TRANSPORTATION
RAIL TRANSPORT GROUP ENGINEERING
COMMUNICATIONS AND SIGNALS

SIGNALS 183W & 183E

ELECTROLOGIXS UNIT 1TZU MODULE CONNECTOR USAGE
SMITHBORO, IL M.P. OS-183.80

DESIGNED	DIGITIZED	CHECKED	DATE
GET/JME	GET/SAT	GET/JMA	07-23 10

DESIGN DATE	REV. NO.	DRAWING	SHEET NO	FILE	SHEET
-----	2	-----	-----	QS18380	G01

VITAL CONFIGURATION SETTINGS

SETT.	BIT NAME	TRUE	FALSE	BIT MEANING
1	BDEO		X	TRUE IF BDEO MODE (CH ID1 NOT PUNCHED) FALSE FOR TMDAT MODE (CH ID 1 PUNCHED)
2	LOL_POR	X		LAMP-OUT LEFT, POWER-OFF RIGHT
3	POL_LOR		X	POWER-OFF LEFT, LAMP-OUT RIGHT
4	LAGE_ON	X	X	TRUE IF LEFT A HEAD GREEN LAMP PRESENT. FALSE IF LEFT A HEAD GREEN LAMP NOT INSTALLED.
5	LBGE_ON	X	X	TRUE IF LEFT B HEAD GREEN LAMP PRESENT. FALSE IF LEFT B HEAD GREEN LAMP NOT INSTALLED.
6	LBRE_ON	X	X	TRUE IF LEFT B HEAD RED LAMP PRESENT. FALSE IF LEFT B HEAD RED LAMP NOT INSTALLED.
7	RAGE_ON	X	X	TRUE IF RIGHT A HEAD GREEN LAMP PRESENT. FALSE IF RIGHT A HEAD GREEN LAMP NOT INSTALLED.
8	RBGE_ON		X	TRUE IF RIGHT B HEAD GREEN LAMP PRESENT. FALSE IF RIGHT B HEAD GREEN LAMP NOT INSTALLED.
9	RBRE_ON		X	TRUE IF RIGHT B HEAD RED LAMP PRESENT. FALSE IF RIGHT B HEAD RED LAMP NOT INSTALLED.
10	MCODE_LEFT	X	X	TRUE IF A CONTROL POINT IS NOT IMMEDIATELY TO THE LEFT. FALSE IF A CONTROL POINT IS IMMEDIATELY TO THE LEFT.
11	MCODE_RIGHT	X		TRUE IF A CONTROL POINT IS NOT IMMEDIATELY TO THE RIGHT. FALSE IF A CONTROL POINT IS IMMEDIATELY TO THE RIGHT.
12	LC1SW		X	(FOR SETTING 12 THRU 15, SEE CHART BELOW)
13	LC5SW	X		(FOR SETTING 12 THRU 15, SEE CHART BELOW)
14	RC1SW		X	(FOR SETTING 12 THRU 15, SEE CHART BELOW)
15	RC5SW		X	(FOR SETTING 12 THRU 15, SEE CHART BELOW)
16	LWL_ON		X	TRUE IF A LEFT (TRACK 1) ELECTRICALLY LOCKED SWITCH IS BEING DRIVEN. FALSE IF NO LEFT (TRACK 1) ELECTRIC LOCK IS PRESENT.
17	RWL_ON		X	TRUE IF A RIGHT (TRACK 2) ELECTRICALLY LOCKED SWITCH IS BEING DRIVEN. FALSE IF NO RIGHT (TRACK 2) ELECTRIC LOCK IS PRESENT.
18	STEADY_LIGHT		X	TRUE FOR STEADY LIGHTING WITH P.O. INPUT HIGH. FALSE FOR APPROACH LIGHTING.
19	KILL_5		X	TRUE TO END CODE 5 TRANSMISSION WITH NWP INPUT.

DIAGNOSTIC AND OFFICE PORT PIN ASSIGNMENT

PIN	SIGNAL	SIGNAL NAME
1	CD	CARRIER DETECT
2	RX	RECEIVE DATA
3	TX	TRANSMIT DATA
4	DTR	DATA TERM READY
5	GND	COMMON SIGNAL RETURN
6	DSR	DATA SET READY
7	RTS	REQUEST TO SEND
8	CTS	CLEAR TO SEND
9	RI	RING INDICATOR

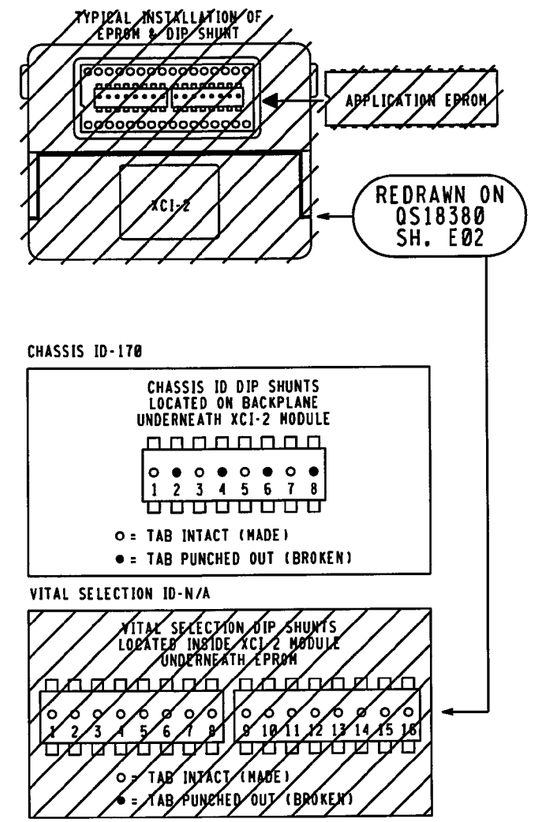

APP NAME	ELX4LDI	REV.	1
VITAL CRC	8210	NV CRC	521D
VITAL CKSUM	FB31	NV CKSUM	64E0
VITAL VAL CRC	XX	NV VAL CRC	XX

CHART FOR SETTINGS 12 THRU 15	
SETTING COMBINATION	RESULTANT
LC1SW - TRUE AND LC5SW - FALSE	CODE 1 IN RIGHT (TRACK 2), CODE 5 OUT LEFT (TRACK 1)
LC1SW - FALSE AND LC5SW - TRUE	CODE 5 IN RIGHT (TRACK 2), CODE 5 OUT LEFT (TRACK 1)
LC1SW - FALSE AND LC5SW - FALSE	CODE 5 NOT TRANSMITTED LEFT (TRACK 1)
LC1SW - TRUE AND LC5SW - TRUE	CODE 5 TRANSMITTED LEFT (TRACK 1) CONTINUOUSLY
RC1SW - TRUE AND RC5SW - FALSE	CODE 1 IN LEFT (TRACK 1), CODE 5 OUT RIGHT (TRACK 2)
RC1SW - FALSE AND RC5SW - TRUE	CODE 5 IN LEFT (TRACK 1), CODE 5 OUT RIGHT (TRACK 2)
RC1SW - FALSE AND RC5SW - FALSE	CODE 5 NOT TRANSMITTED RIGHT (TRACK 2)
RC1SW - TRUE AND RC5SW - TRUE	CODE 5 TRANSMITTED RIGHT (TRACK 2) CONTINUOUSLY

= NOTE

//// = SHOWN ELSEWHERE

ALL ELSE OUT
THIS SHEET IS VOID
WHEN AS IN SERVICED.
CWM1435882 IL2014024
10-13-14 XRL/JM /
xorail

NO CHANGES
CWM1437222 IL2014036
10-09-14 XRL/BDB/
xorail

ELECTROLOGIXS UNIT 1TZU

CSX TRANSPORTATION
RAIL TRANSPORT GROUP ENGINEERING
COMMUNICATIONS AND SIGNALS

SIGNALS 183W & 183E

ELECTROLIGIXS UNIT 1TZU CHASSIS ID AND
VITAL CONFIGURATION SETTINGS
SMITHBORO, IL M.P. OS-183.80

DESIGNED	DIGITIZED	CHECKED	DATE
GET/JME	GET/SAT	GET/JMA	07 23 10

DESIGN DATE	REV. NO.	DRAWING	SHEET NO	FILE	SHEET
-----	2	-----	-----	QS18380	G03

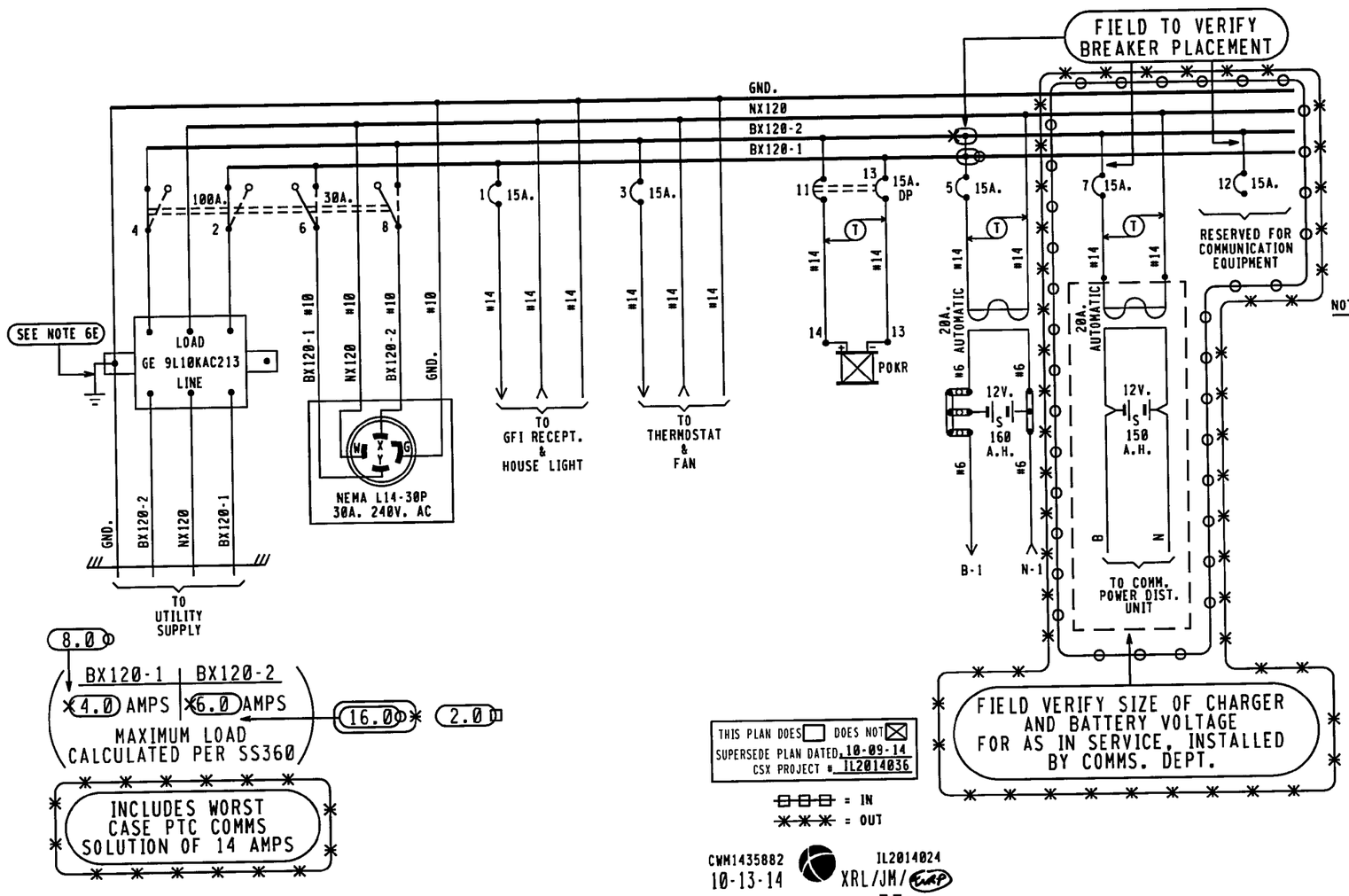

POKR			
9	F	11	N68
10		12	C48

WALL MOUNTED

NOTES:

1 - REFERENCES ARE PER SCMS-13.
2 - ARRESTERS ARE PER SS382.
3 - SHELF RELAY PLACEMENT ON CONSIST CHART HAS NO SIGNIFICANCE.
4 - PLUG-IN RELAYS ARE VIEWED FROM THE FRONT OF RACK.
5 - BATTERY A.H. CAPACITY SHOWN IS THE MINIMUM REQUIREMENT.
6 - WIRING
  A - FEED TO ALL BUSSES, LIGHT CIRCUITS, MOTOR CIRCUITS TO BE #10 FLEX.
  B - 120-VOLT FEED FROM ENTRANCE TO POWER BUSS TO BE #10 FLEX.
  C - ALL TRACK WIRES TO BE #10 FLEX.
  D - ALL OTHERS TO BE #16 FLEX UNLESS NOTED.
  E - GROUND WIRE NOT NECESSARY WHEN GE ARRESTER IS MOUNTED ON GROUND PLANE OR METAL ENCLOSURE AFFIXED DIRECTLY TO BUNGALOW METALLIC STRUCTURAL MEMBER.
7 - CIRCUIT INTERRUPTERS 2 & 4 ARE MECHANICALLY INTERLOCKED WITH CIRCUIT INTERRUPTERS 6 & 8.

= NOTE
= IN
= OUT

THIS PLAN DOES ☐ DOES NOT ☒
SUPERSEDE PLAN DATED 10-09-14
CSX PROJECT # IL2014036

= IN
= OUT

CWM1435882 IL2014024
10-13-14 XRL/JM/
xorail

CWM1437222 IL2014036
10-09-14 XRL/BDB/
xorail

CUT SECTION

6'X 6' RELAY HOUSE

CSX TRANSPORTATION
RAIL TRANSPORT GROUP ENGINEERING
COMMUNICATIONS AND SIGNALS

SIGNALS 183W & 183E

POWER DISTRIBUTION
SMITHBORO, IL M.P. QS-183.80

10-13-14
10-09-14

DESIGN DATE	REV. NO.	DESIGNED	DIGITIZED	CHECKED	DATE
	2	GET/WJB	GET/SAT	GET/JMA	07-23 10
		DRAWING	SHEET NO	FILE	SHEET
		- ---	-----	QS18380	E01

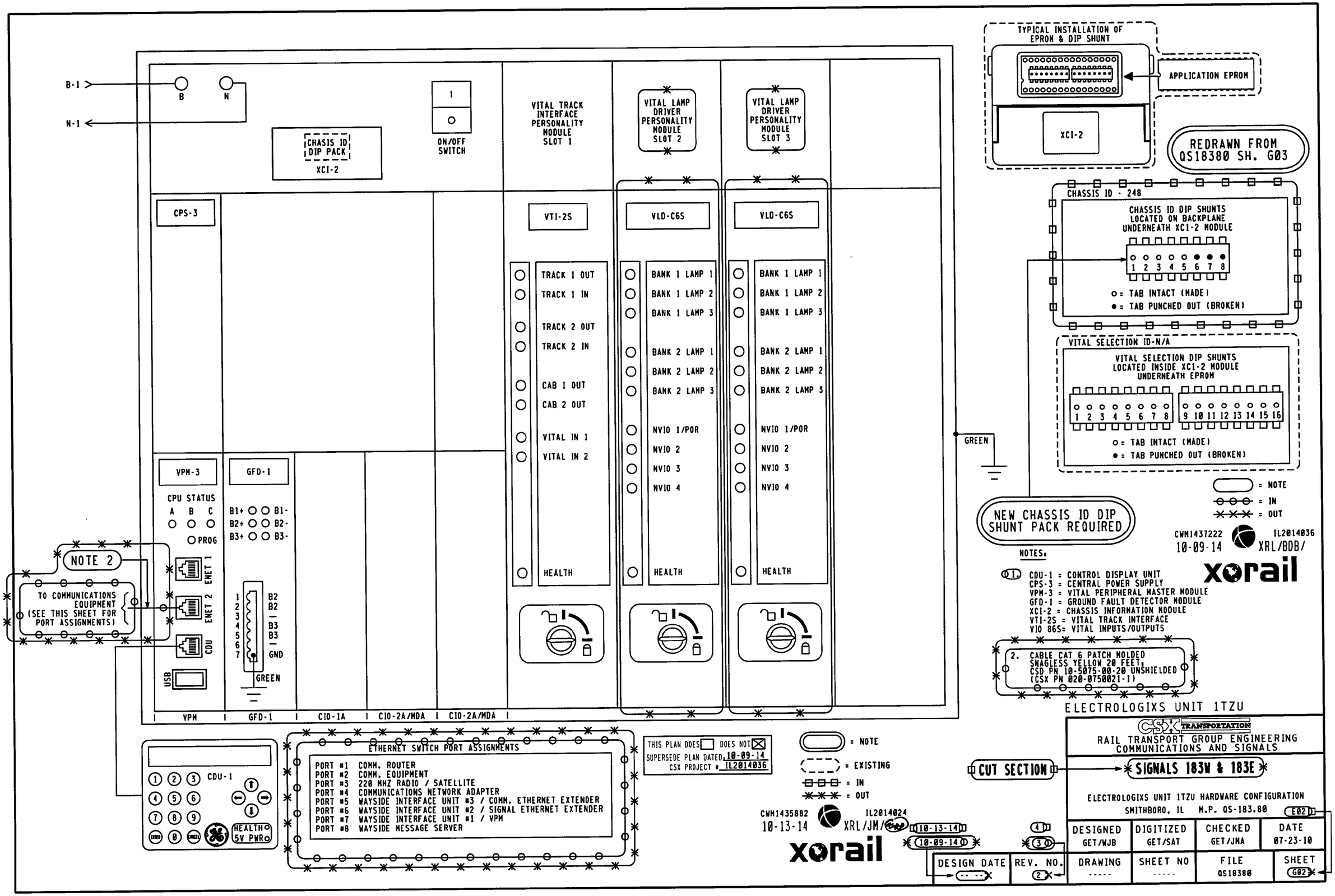
B-1
N-1
B
N
CHASSIS ID DIP PACK
XCI-2
ON/OFF SWITCH
VITAL TRACK INTERFACE PERSONALITY MODULE SLOT 1
VITAL LAMP DRIVER PERSONALITY MODULE SLOT 2
VITAL LAMP DRIVER PERSONALITY MODULE SLOT 3
CPS-3
VTI-2S
VLD-C6S
VLD-C6S
TRACK 1 OUT
TRACK 1 IN
TRACK 2 OUT
TRACK 2 IN
CAB 1 OUT
CAB 2 OUT
VITAL IN 1
VITAL IN 2
HEALTH
BANK 1 LAMP 1
BANK 1 LAMP 2
BANK 1 LAMP 3
BANK 2 LAMP 1
BANK 2 LAMP 2
BANK 2 LAMP 3
NVIO 1/POR
NVIO 2
NVIO 3
NVIO 4
HEALTH
BANK 1 LAMP 1
BANK 1 LAMP 2
BANK 1 LAMP 3
BANK 2 LAMP 1
BANK 2 LAMP 2
BANK 2 LAMP 3
NVIO 1/POR
NVIO 2
NVIO 3
NVIO 4
HEALTH
VPM-3
GFD-1
CPU STATUS
A B C
PROG
B1+ B1-
B2+ B2-
B3+ B3-
ENET 1
ENET 2
CDU
USB
B2
B2
B3
B3
GND
GREEN
NOTE 2
TO COMMUNICATIONS EQUIPMENT (SEE THIS SHEET FOR PORT ASSIGNMENTS)
VPM
GFD-1
CIO-1A
CIO-2A/MDA
CIO-2A/MDA
GREEN
TYPICAL INSTALLATION OF EPROM & DIP SHUNT
APPLICATION EPROM
XCI-2
REDRAWN FROM QS18380 SH. G03
CHASSIS ID - 248
CHASSIS ID DIP SHUNTS LOCATED ON BACKPLANE UNDERNEATH XC1-2 MODULE
1 2 3 4 5 6 7 8
O = TAB INTACT (MADE)
● = TAB PUNCHED OUT (BROKEN)
VITAL SELECTION ID-N/A
VITAL SELECTION DIP SHUNTS LOCATED INSIDE XC1-2 MODULE UNDERNEATH EPROM
1 2 3 4 5 6 7 8
9 10 11 12 13 14 15 16
O = TAB INTACT (MADE)
● = TAB PUNCHED OUT (BROKEN)
NEW CHASSIS ID DIP SHUNT PACK REQUIRED
= NOTE
= IN
= OUT
CWM1437222
10-09-14
IL2014036
XRL/BDB/
xorail
NOTES:
1. CDU-1 = CONTROL DISPLAY UNIT
CPS-3 = CENTRAL POWER SUPPLY
VPM-3 = VITAL PERIPHERAL MASTER MODULE
GFD-1 = GROUND FAULT DETECTOR MODULE
XCI-2 = CHASSIS INFORMATION MODULE
VTI-2S = VITAL TRACK INTERFACE
VIO 86S= VITAL INPUTS/OUTPUTS
2. CABLE CAT 6 PATCH MOLDED SNAGLESS YELLOW 20 FEET, CSD PN 10-5075-00-20 UNSHIELDED (CSX PN 020-0750021-1)
ELECTROLOGIXS UNIT 1TZU
CDU-1
HEALTH
5V PWR
ETHERNET SWITCH PORT ASSIGNMENTS
PORT #1 COMM. ROUTER
PORT #2 COMM. EQUIPMENT
PORT #3 220 MHZ RADIO / SATELLITE
PORT #4 COMMUNICATIONS NETWORK ADAPTER
PORT #5 WAYSIDE INTERFACE UNIT #3 / COMM. ETHERNET EXTENDER
PORT #6 WAYSIDE INTERFACE UNIT #2 / SIGNAL ETHERNET EXTENDER
PORT #7 WAYSIDE INTERFACE UNIT #1 / VPM
PORT #8 WAYSIDE MESSAGE SERVER
THIS PLAN DOES ☐ DOES NOT ☒
SUPERSEDE PLAN DATED 10-09-14
CSX PROJECT # IL2014036
= NOTE
= EXISTING
= IN
= OUT
CWM1435882
10-13-14
IL2014024
XRL/JM/
10-13-14
10-09-14
xorail
CUT SECTION
CSX TRANSPORTATION
RAIL TRANSPORT GROUP ENGINEERING
COMMUNICATIONS AND SIGNALS
SIGNALS 183W & 183E
ELECTROLOGIXS UNIT 1TZU HARDWARE CONFIGURATION
SMITHBORO, IL M.P. QS-183.80
E02
DESIGNED GET/WJB
DIGITIZED GET/SAT
CHECKED GET/JMA
DATE 07-23-10
DESIGN DATE
REV. NO. 2
DRAWING -----
SHEET NO -----
FILE QS18380
SHEET G02

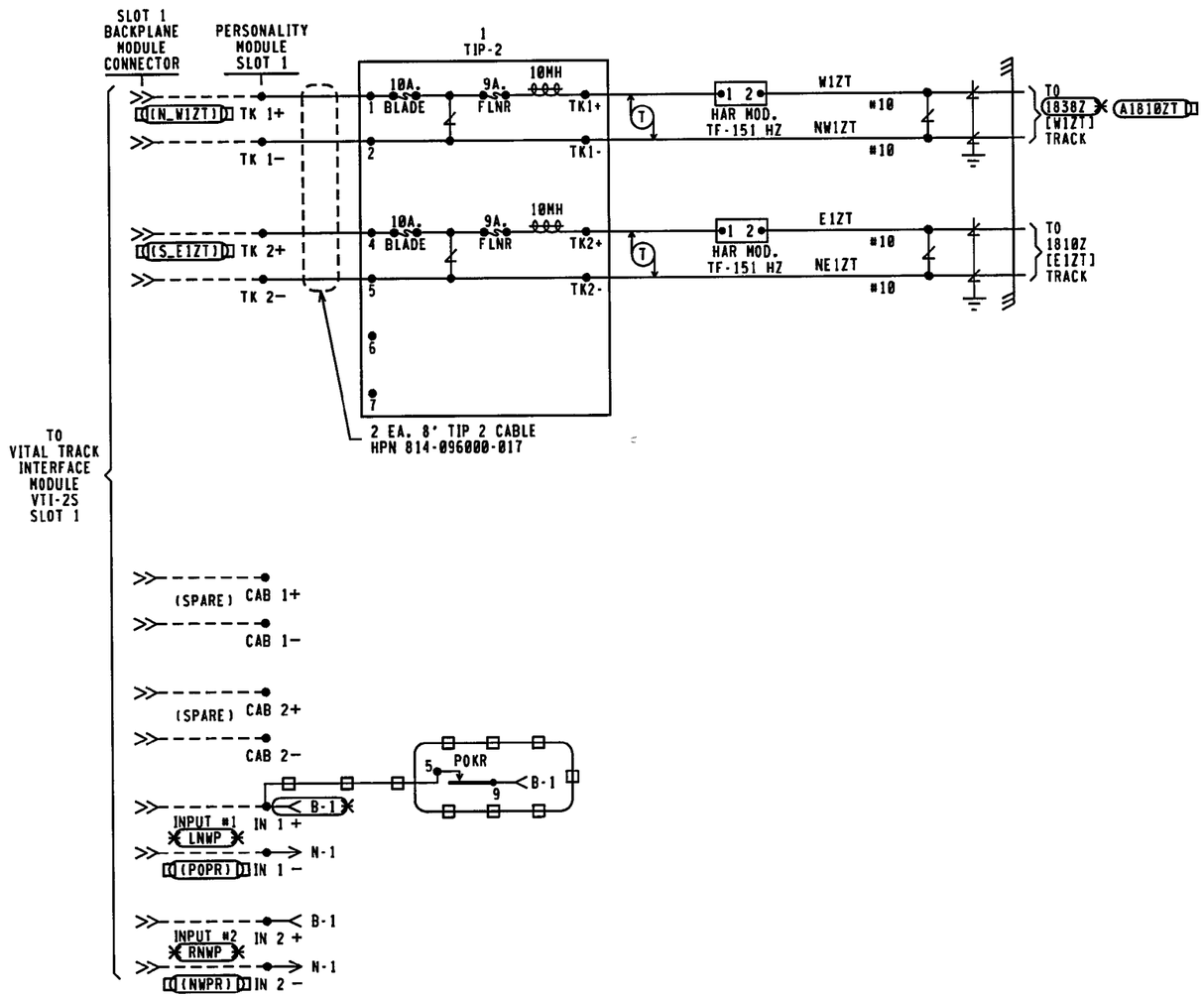

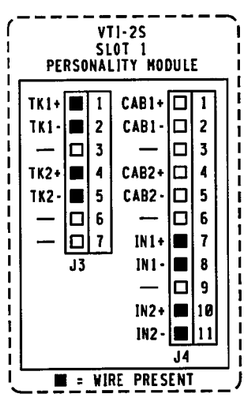

REDRAWN FROM
QS18380
SH. G01

NOTES:

1. [ ] = TAGGING PURPOSES ONLY
2. --- = INTERNAL CONNECTION
3. ALL HOUSE WIRING #14 UNLESS NOTED.

CUT SECTION

= EXISTING
= IN
= OUT

CWM1435882 10-13-14 IL2014024 XRL/JM/ TAP
xorail

NO CHANGES
CWM1437222 10-09-14 IL2014036 XRL/BDB/
xorail

ELECTROLOGIXS UNIT 1TZU

CSX TRANSPORTATION
RAIL TRANSPORT GROUP ENGINEERING
COMMUNICATIONS AND SIGNALS

SIGNALS 183W & 183E

ELECTROLOGIXS UNIT 1TZU TRACK AND VITAL I/O
SMITHBORO, IL M.P. QS 183.80

DESIGNED	DIGITIZED	CHECKED	DATE
GET/WJB	GET/SAT	GET/JMA	07-23-10

DESIGN DATE	REV. NO.	DRAWING	SHEET NO	FILE	SHEET
10-13 14 -----	4 2	-- --	-----	QS18380	C01

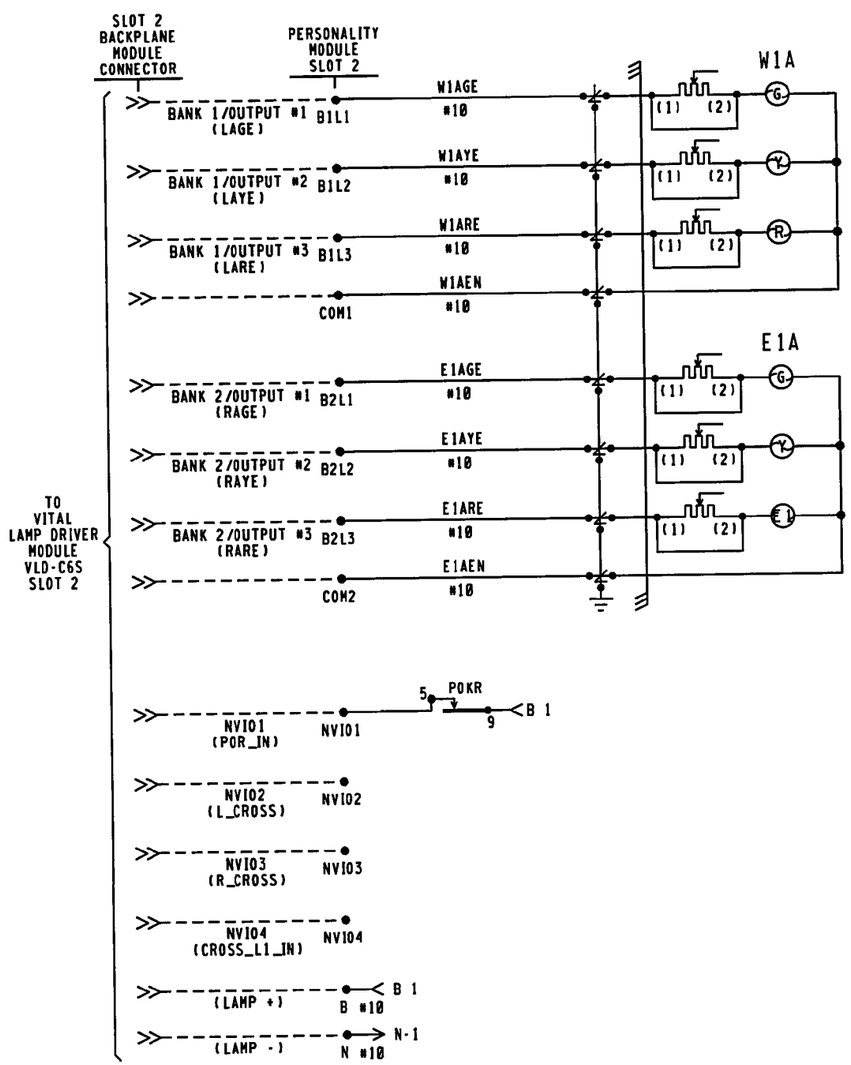

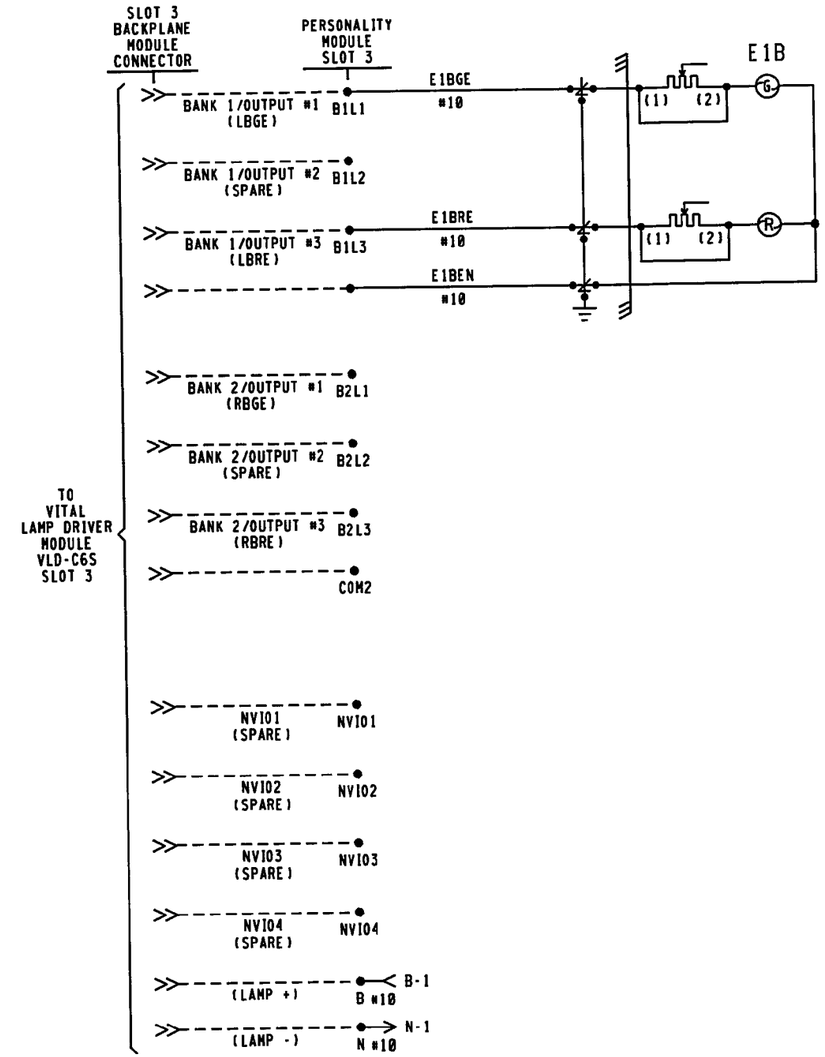

NOTES:

1. ---- = INTERNAL CONNECTION
2. ALL HOUSE WIRING #14 UNLESS NOTED.

ELECTROLOGIXS UNIT 1TZU

WARNING
3 OHM VARIABLE, 15 WATT RESISTORS IN SIGNAL HEADS MUST BE JUMPERED OUT. ALL LAMP VOLTAGE ADJUSTMENTS ARE TO BE DONE VIA THE CONTROL DISPLAY UNIT (CDU-1).

ALL OUT
THIS SHEET IS VOID
WHEN AS IN SERVICED.
CWM1435882 IL2014024
10-13-14 XRL/JM/
xorail

NO CHANGES
CWM1437222 IL2014036
10-09-14 XRL/BDB/
xorail

CSX TRANSPORTATION
RAIL TRANSPORT GROUP ENGINEERING
COMMUNICATIONS AND SIGNALS

SIGNALS 183W & 183E

ELECTROLOGIXS UNIT 1TZU SIGNAL LIGHTING
CIRCUITS AND NON-VITAL I/O
SMITHBORO, IL M.P. QS 183.80

DESIGNED	DIGITIZED	CHECKED	DATE
GET/JME	GET/SAT	GET/JMA	07-23 10

DESIGN DATE	REV. NO.	DRAWING	SHEET NO	FILE	SHEET
-----	2	-----	-----	QS18380	C02

INDEX

CONTENTS

SH. NO.	CONTENTS	REVISION NO. 1	2	3	4	5	6	7	8	9
I01	TITLE, NOTES, INDEX AND REVISIONS	X	X	⊘	⊠					
S01	TRACK AND SIGNAL PLAN	X	X	⊘	⊠					
G01	ELECTROLOGIXS UNIT 1TZU MODULE CONNECTOR USAGE		X							
E02	G02 ELECTROLOGIXS UNIT 1TZU HARDWARE CONFIGURATION	X	X	⊘	⊠					
G03	ELECTROLOGIXS UNIT 1TZU CHASSIS ID AND VITAL CONFIGURATION SETTINGS		X							
E01	POWER DISTRIBUTION (6'X 6' RELAY HOUSE)	X	X	⊘	⊠					
C01	ELECTROLOGIXS UNIT 1TZU TRACK AND VITAL I/O	X	X		⊠					
C02	ELECTROLOGIXS UNIT ITZU SIGNAL LIGHTING CIRCUITS AND NON VITAL I/O	X	X							
P01	ELECTROLOGIXS PROGRAM				/					

X = DESIGN COMPLETED

X = REVISION COMPLETED

REVISIONS

REV. NO.	PROJECT NO.	DESIGN DATE	IN SERVICE DATE	REVISION DATE
1	IL2010024	09-29-10	01-17-11	03-23-11
2	IL2010004	07-23-10	08-09-11	11-01-11
3	IL2014036	10-09-14	-----	-----
4	IL2014024	10-13-14		

TO BE COMPLETED ON A.I.S.

THIS PLAN DOES ☐ DOES NOT ☒
SUPERSEDE PLAN DATED 10-09-14
CSX PROJECT # IL2014036

= IN

= OUT

CWM1435882 IL2014024
10-13-14 XRL/JM/

xorail

= NOTE

= IN

= OUT

CWM1437222 IL2014036
10-09-14 XRL/BDB/

xorail

CSX TRANSPORTATION
RAIL TRANSPORT GROUP ENGINEERING
COMMUNICATIONS AND SIGNALS

CUT SECTION

SIGNALS 183W & 183E

TITLE, NOTES, INDEX AND REVISIONS
SMITHBORO, IL M.P. OS-183.80

10-13-14
10-09-14

4
3

DESIGN DATE	REV. NO.	DESIGNED	DIGITIZED	CHECKED	DATE
-----	2	GET/WJB	GET/SAT	GET/JMA	07-23-10
		DRAWING	SHEET NO	FILE	SHEET
		-----	-----	OS18380	I01

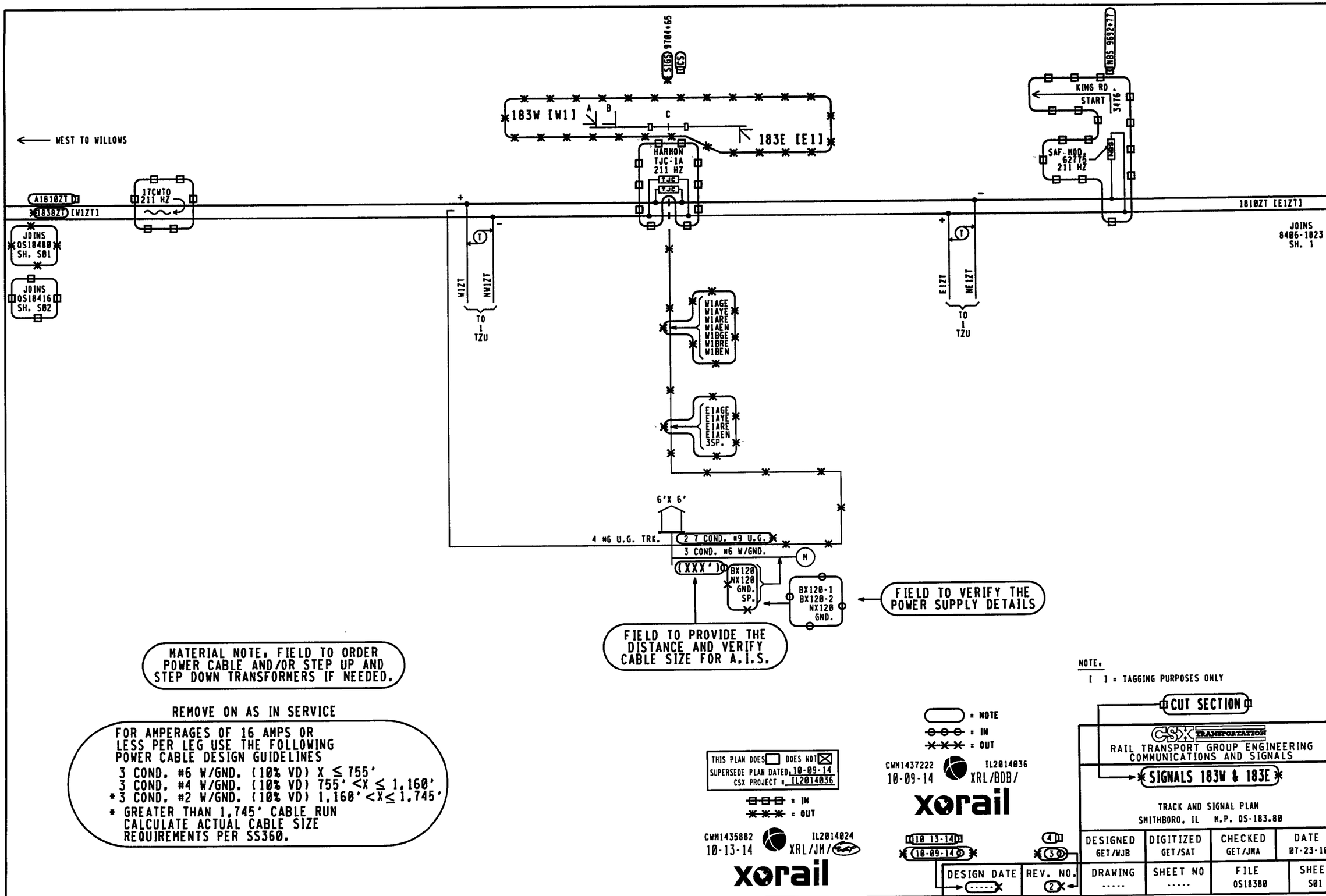

WEST TO WILLOWS
A1810ZT
1838ZT [W1ZT]
17CWTO 211 HZ
JOINS OS18480 SH. S01
JOINS OS18416 SH. S02
183W [W1]
A
B
C
183E [E1]
HARMON TJC-1A 211 HZ
TJC
SIGS 9784+65
UCS
NBS 9692+77
KING RD
START
3476'
SAF-MOD 62775 211 HZ
1810ZT [E1ZT]
JOINS 8406-1823 SH. 1
W1ZT
NW1ZT
TO 1 TZU
E1ZT
NE1ZT
W1AGE
W1AYE
W1ARE
W1AEN
W1BGE
W1BRE
W1BEN
E1AGE
E1AYE
E1ARE
E1AEN
3SP.
6'X 6'
4 #6 U.G. TRK.
2 7 COND. #9 U.G.
3 COND. #6 W/GND.
M
(XXX')
BX120
NX120
GND.
SP.
BX120-1
BX120-2
NX120
GND.
FIELD TO VERIFY THE POWER SUPPLY DETAILS
FIELD TO PROVIDE THE DISTANCE AND VERIFY CABLE SIZE FOR A.I.S.
MATERIAL NOTE: FIELD TO ORDER POWER CABLE AND/OR STEP UP AND STEP DOWN TRANSFORMERS IF NEEDED.
REMOVE ON AS IN SERVICE
FOR AMPERAGES OF 16 AMPS OR LESS PER LEG USE THE FOLLOWING POWER CABLE DESIGN GUIDELINES
3 COND. #6 W/GND. (10% VD) X ≤ 755'
3 COND. #4 W/GND. (10% VD) 755' <X ≤ 1,160'
* 3 COND. #2 W/GND. (10% VD) 1,160' <X ≤ 1,745'
* GREATER THAN 1,745' CABLE RUN CALCULATE ACTUAL CABLE SIZE REQUIREMENTS PER SS360.
NOTE:
[ ] = TAGGING PURPOSES ONLY
CUT SECTION
= NOTE
= IN
= OUT
THIS PLAN DOES DOES NOT
SUPERSEDE PLAN DATED 10-09-14
CSX PROJECT # IL2014036
= IN
= OUT
CWM1435882 10-13-14 IL2014024 XRL/JM/
xorail
CWM1437222 10-09-14 IL2014036 XRL/BDB/
xorail
10 13-14
10-09-14
4
3
DESIGN DATE
REV. NO.
2
CSX TRANSPORTATION
RAIL TRANSPORT GROUP ENGINEERING
COMMUNICATIONS AND SIGNALS
SIGNALS 183W & 183E
TRACK AND SIGNAL PLAN
SMITHBORO, IL M.P. OS-183.80
DESIGNED GET/WJB
DIGITIZED GET/SAT
CHECKED GET/JMA
DATE 07-23-10
DRAWING
SHEET NO
FILE OS18380
SHEET S01

VITAL APPLICATION INFORMATION

ITEM	SETTING
NAME	CSX1RPT4_VX
CHASSIS ID	248
INDEX	001
EPT CRC	XXXX
EPT CHECKSUM	XXXX

FIELD TO PROVIDE ON A.I.S.

VITAL SELECTION SETTINGS

SETT.	BIT NAME	TRUE	FALSE	BIT MEANING	
1	N_W1MCODE		X	TRUE IF MAINTENANCE CODE WILL BE RECEIVED FROM THE NORTH/WEST AND WILL BE PASSED SOUTH/EAST. FALSE IF NO MAINTENANCE CODE IS RECEIVED FROM THE NORTH/WEST AND IT IS TO BE INITIATED TO THE SOUTH/EAST.	*
2	S_E1MCODE	X		TRUE IF MAINTENANCE CODE WILL BE RECEIVED FROM THE SOUTH/EAST AND WILL BE PASSED NORTH/WEST. FALSE IF NO MAINTENANCE CODE IS RECEIVED FROM THE SOUTH/EAST AND IT IS TO BE INITIATED TO THE NORTH/WEST.	*
3	N_W1C1SW		X	(FOR SETTING, SEE CHART BELOW)	*
4	N_W1C5SW	X		(FOR SETTING, SEE CHART BELOW)	*
5	S_E1C1SW		X	(FOR SETTING, SEE CHART BELOW)	*
6	S_E1C5SW		X	(FOR SETTING, SEE CHART BELOW)	*
7	BDEO__MODE1		X	TRUE WHEN LIMITED TUMBLEDOWN (BDEO) MODE REQUIRED. FALSE WHEN TRADITIONAL TUMBLEDOWN (TMDAT) MODE REQUIRED.	*
8	SLOT3__ON		X	TRUE WHEN SLOT 3 IS BEING USED FOR ELECTRIC LOCK. FALSE WHEN SLOT 3 IS NOT USED FOR ELECTRIC LOCK.	*
9	S_EPOK	X		SETTING 9 TRUE AND SETTING 10 FALSE MAINTENANCE CODE FOR BLOCK POWER-OFF INDICATION WILL BE TRANSMITTED INTO THE SOUTH/EAST TRACK. IF BOTH SETTING ARE TRUE OR BOTH FALSE MAINTENANCE CODE WILL NOT BE TRANSMITTED IN EITHER DIRECTION.	*
10	N_WPOK		X	SETTING 9 FALSE AND SETTING 10 TRUE MAINTENANCE CODE FOR BLOCK POWER-OFF INDICATION WILL BE TRANSMITTED INTO THE NORTH/WEST TRACK. IF BOTH SETTING ARE TRUE OR BOTH FALSE MAINTENANCE CODE WILL NOT BE TRANSMITTED IN EITHER DIRECTION.	*

GFD-1 SETTINGS

ITEM	SETTING	
BATTERY 1 NAME	B-1	*
BATTERY 1 FAULT STATUS	NO FAULT	*
BATTERY 1 CALIBRATED VOLTAGE	13.5	*
BATTERY 1 GROUND FAULT THRESHOLD	8	*
BATTERY 1 GROUND FAULT TIME	30	*
BATTERY 1 LOW BATTERY ALARM VOLTAGE	8.0	*
BATTERY 1 HIGH BATTERY ALARM VOLTAGE	16.5	*
BATTERY 2 NAME	NONE	*
BATTERY 2 FAULT STATUS	NO FAULT	*
BATTERY 2 CALIBRATED VOLTAGE	13.5	*
BATTERY 2 GROUND FAULT THRESHOLD	8	*
BATTERY 2 GROUND FAULT TIME	30	*
BATTERY 2 LOW BATTERY ALARM VOLTAGE	8.0	*
BATTERY 2 HIGH BATTERY ALARM VOLTAGE	16.5	*
BATTERY 3 NAME	NONE	*
BATTERY 3 FAULT STATUS	NO FAULT	*
BATTERY 3 CALIBRATED VOLTAGE	13.5	*
BATTERY 3 GROUND FAULT THRESHOLD	8	*
BATTERY 3 GROUND FAULT TIME	30	*
BATTERY 3 LOW BATTERY ALARM VOLTAGE	8.0	*
BATTERY 3 HIGH BATTERY ALARM VOLTAGE	16.5	*

NOTES:

1. * = STATUS SET/CHANGED USING THE CDU-1. ALL OTHERS SET IN THE ACE PROGRAM.
2. VPM-3 ETHERNET PORT ENET1 IP ADDRESS IS 192.168.0.11. ENET2 IS 192.168.1.12.
3. X = TO BE FILLED OUT DURING FIELD/FACTORY TESTING.

CHART FOR SETTING CODE 5

SETTING COMBINATION	RESULTANT
N_WC1SW TRUE AND N_WC5SW - FALSE	CODE 1 IN SOUTH/EAST, CODE 5 OUT NORTH/WEST
N_WC1SW FALSE AND N_WC5SW - TRUE	CODE 5 IN SOUTH/EAST, CODE 5 OUT NORTH/WEST
N_WC1SW - FALSE AND N_WC5SW - FALSE	CODE 5 NOT TRANSMITTED NORTH/WEST
N_WC1SW - TRUE AND N_WC5SW - TRUE	CODE 5 TRANSMITTED NORTH/WEST CONTINUOUSLY
S_EC1SW - TRUE AND S_EC5SW - FALSE	CODE 1 IN NORTH/WEST, CODE 5 OUT SOUTH/EAST
S_EC1SW - FALSE AND S_EC5SW - TRUE	CODE 5 IN NORTH/WEST, CODE 5 OUT SOUTH/EAST
S_EC1SW - FALSE AND S_EC5SW - FALSE	CODE 5 NOT TRANSMITTED SOUTH/EAST
S_EC1SW - TRUE AND S_EC5SW - TRUE	CODE 5 TRANSMITTED SOUTH/EAST CONTINUOUSLY

= NOTE

NEW WORK
CWM1435882 IL2014024
10-13-14 XRL/JM /
xorail

1TREPELX.P01A
REV. 08-05-14

CSX TRANSPORTATION
RAIL TRANSPORT GROUP ENGINEERING
COMMUNICATIONS AND SIGNALS

CUT SECTION

ELECTROLOGIXS PROGRAM
SMITHBORO, IL M.P. OS 183.80

DESIGNED	DIGITIZED	CHECKED	DATE
XRL	XRL	XRL	10-13-14

DESIGN DATE	REV. NO.	DRAWING	SHEET NO	FILE	SHEET
10-13-14	4	-----	-----	OS10380	P01

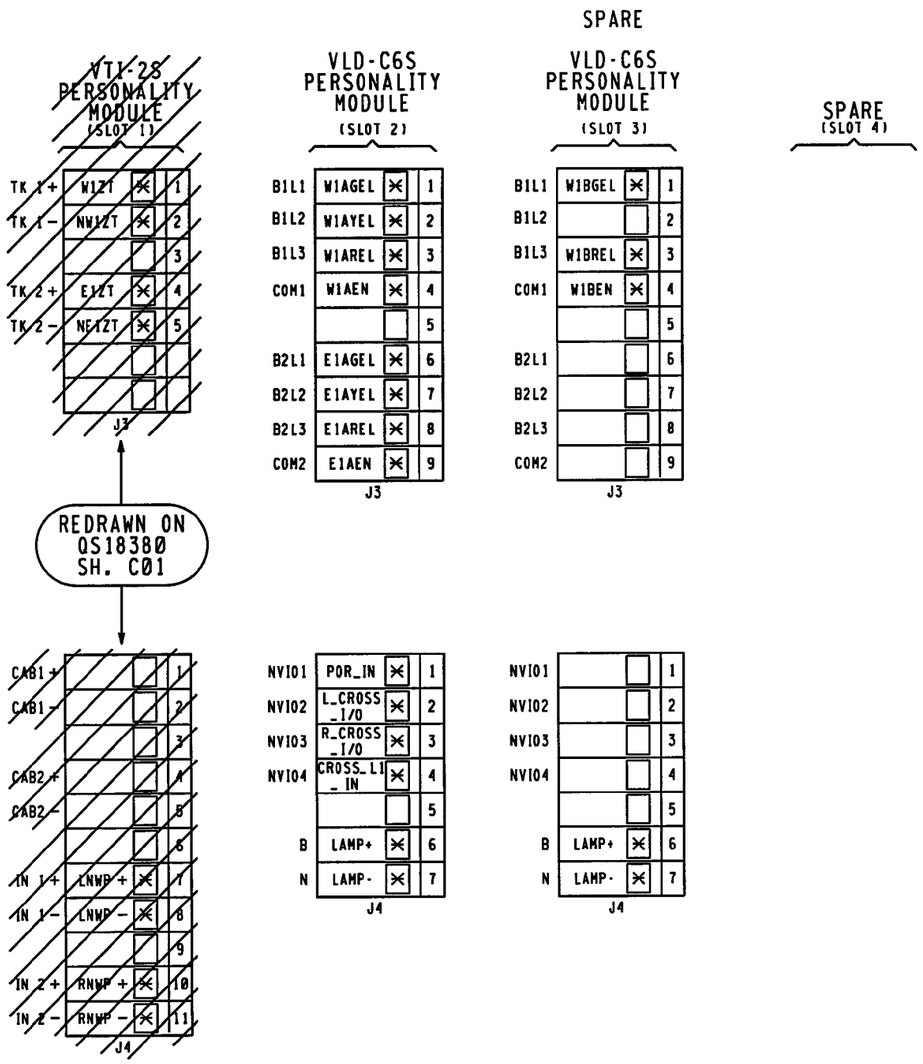

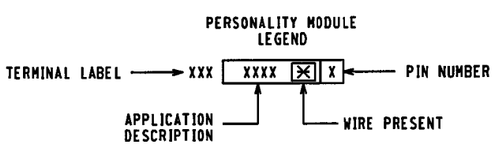

= NOTE

//// = SHOWN ELSEWHERE

ALL ELSE OUT THIS SHEET IS VOID WHEN AS IN SERVICED.

CWM1435882 IL2014024
10-13-14 XRL/JM/

xorail

NO CHANGES
CWM1437222 IL2014036
10-09-14 XRL/BDB/

xorail

ELECTROLOGIXS UNIT 1TZU

CSX TRANSPORTATION
RAIL TRANSPORT GROUP ENGINEERING
COMMUNICATIONS AND SIGNALS

SIGNALS 183W & 183E

ELECTROLOGIXS UNIT 1TZU MODULE CONNECTOR USAGE
SMITHBORO, IL M.P. OS-183.80

DESIGNED	DIGITIZED	CHECKED	DATE
GET/JME	GET/SAT	GET/JMA	07-23 10

DESIGN DATE	REV. NO.	DRAWING	SHEET NO	FILE	SHEET
-----	2	-----	-----	QS18380	G01

VITAL CONFIGURATION SETTINGS

SETT.	BIT NAME	TRUE	FALSE	BIT MEANING
1	BDEO		X	TRUE IF BDEO MODE (CH ID1 NOT PUNCHED) FALSE FOR TMDAT MODE (CH ID 1 PUNCHED)
2	LOL_POR	X		LAMP-OUT LEFT, POWER-OFF RIGHT
3	POL_LOR		X	POWER-OFF LEFT, LAMP-OUT RIGHT
4	LAGE_ON	X	X	TRUE IF LEFT A HEAD GREEN LAMP PRESENT. FALSE IF LEFT A HEAD GREEN LAMP NOT INSTALLED.
5	LBGE_ON	X	X	TRUE IF LEFT B HEAD GREEN LAMP PRESENT. FALSE IF LEFT B HEAD GREEN LAMP NOT INSTALLED.
6	LBRE_ON	X	X	TRUE IF LEFT B HEAD RED LAMP PRESENT. FALSE IF LEFT B HEAD RED LAMP NOT INSTALLED.
7	RAGE_ON	X	X	TRUE IF RIGHT A HEAD GREEN LAMP PRESENT. FALSE IF RIGHT A HEAD GREEN LAMP NOT INSTALLED.
8	RBGE_ON		X	TRUE IF RIGHT B HEAD GREEN LAMP PRESENT. FALSE IF RIGHT B HEAD GREEN LAMP NOT INSTALLED.
9	RBRE_ON		X	TRUE IF RIGHT B HEAD RED LAMP PRESENT. FALSE IF RIGHT B HEAD RED LAMP NOT INSTALLED.
10	MCODE_LEFT	X	X	TRUE IF A CONTROL POINT IS NOT IMMEDIATELY TO THE LEFT. FALSE IF A CONTROL POINT IS IMMEDIATELY TO THE LEFT.
11	MCODE_RIGHT	X		TRUE IF A CONTROL POINT IS NOT IMMEDIATELY TO THE RIGHT. FALSE IF A CONTROL POINT IS IMMEDIATELY TO THE RIGHT.
12	LC1SW		X	(FOR SETTING 12 THRU 15, SEE CHART BELOW)
13	LC5SW	X		(FOR SETTING 12 THRU 15, SEE CHART BELOW)
14	RC1SW		X	(FOR SETTING 12 THRU 15, SEE CHART BELOW)
15	RC5SW		X	(FOR SETTING 12 THRU 15, SEE CHART BELOW)
16	LWL_ON		X	TRUE IF A LEFT (TRACK 1) ELECTRICALLY LOCKED SWITCH IS BEING DRIVEN. FALSE IF NO LEFT (TRACK 1) ELECTRIC LOCK IS PRESENT.
17	RWL_ON		X	TRUE IF A RIGHT (TRACK 2) ELECTRICALLY LOCKED SWITCH IS BEING DRIVEN. FALSE IF NO RIGHT (TRACK 2) ELECTRIC LOCK IS PRESENT.
18	STEADY_LIGHT		X	TRUE FOR STEADY LIGHTING WITH P.O. INPUT HIGH. FALSE FOR APPROACH LIGHTING.
19	KILL_5		X	TRUE TO END CODE 5 TRANSMISSION WITH NWP INPUT.

DIAGNOSTIC AND OFFICE PORT PIN ASSIGNMENT

PIN	SIGNAL	SIGNAL NAME
1	CD	CARRIER DETECT
2	RX	RECEIVE DATA
3	TX	TRANSMIT DATA
4	DTR	DATA TERM READY
5	GND	COMMON SIGNAL RETURN
6	DSR	DATA SET READY
7	RTS	REQUEST TO SEND
8	CTS	CLEAR TO SEND
9	RI	RING INDICATOR

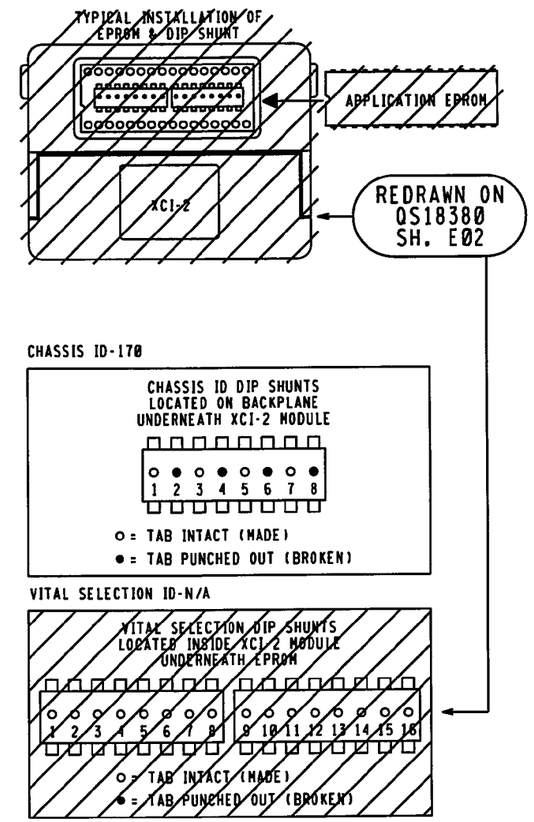

APP NAME	ELX4LDI	REV.	1
VITAL CRC	8210	NV CRC	521D
VITAL CKSUM	FB31	NV CKSUM	64E0
VITAL VAL CRC	XX	NV VAL CRC	XX

CHART FOR SETTINGS 12 THRU 15	
SETTING COMBINATION	RESULTANT
LC1SW - TRUE AND LC5SW - FALSE	CODE 1 IN RIGHT (TRACK 2), CODE 5 OUT LEFT (TRACK 1)
LC1SW - FALSE AND LC5SW - TRUE	CODE 5 IN RIGHT (TRACK 2), CODE 5 OUT LEFT (TRACK 1)
LC1SW - FALSE AND LC5SW - FALSE	CODE 5 NOT TRANSMITTED LEFT (TRACK 1)
LC1SW - TRUE AND LC5SW - TRUE	CODE 5 TRANSMITTED LEFT (TRACK 1) CONTINUOUSLY
RC1SW - TRUE AND RC5SW - FALSE	CODE 1 IN LEFT (TRACK 1), CODE 5 OUT RIGHT (TRACK 2)
RC1SW - FALSE AND RC5SW - TRUE	CODE 5 IN LEFT (TRACK 1), CODE 5 OUT RIGHT (TRACK 2)
RC1SW - FALSE AND RC5SW - FALSE	CODE 5 NOT TRANSMITTED RIGHT (TRACK 2)
RC1SW - TRUE AND RC5SW - TRUE	CODE 5 TRANSMITTED RIGHT (TRACK 2) CONTINUOUSLY

= NOTE

//// = SHOWN ELSEWHERE

ALL ELSE OUT
THIS SHEET IS VOID
WHEN AS IN SERVICED.
CWM1435882 IL2014024
10-13-14 XRL/JM /
xorail

NO CHANGES
CWM1437222 IL2014036
10-09-14 XRL/BDB/
xorail

ELECTROLOGIXS UNIT 1TZU

CSX TRANSPORTATION
RAIL TRANSPORT GROUP ENGINEERING
COMMUNICATIONS AND SIGNALS

SIGNALS 183W & 183E

ELECTROLIGIXS UNIT 1TZU CHASSIS ID AND
VITAL CONFIGURATION SETTINGS
SMITHBORO, IL M.P. OS-183.80

DESIGNED	DIGITIZED	CHECKED	DATE
GET/JME	GET/SAT	GET/JMA	07 23 10

DESIGN DATE	REV. NO.	DRAWING	SHEET NO	FILE	SHEET
-----	2	-----	-----	QS18380	G03

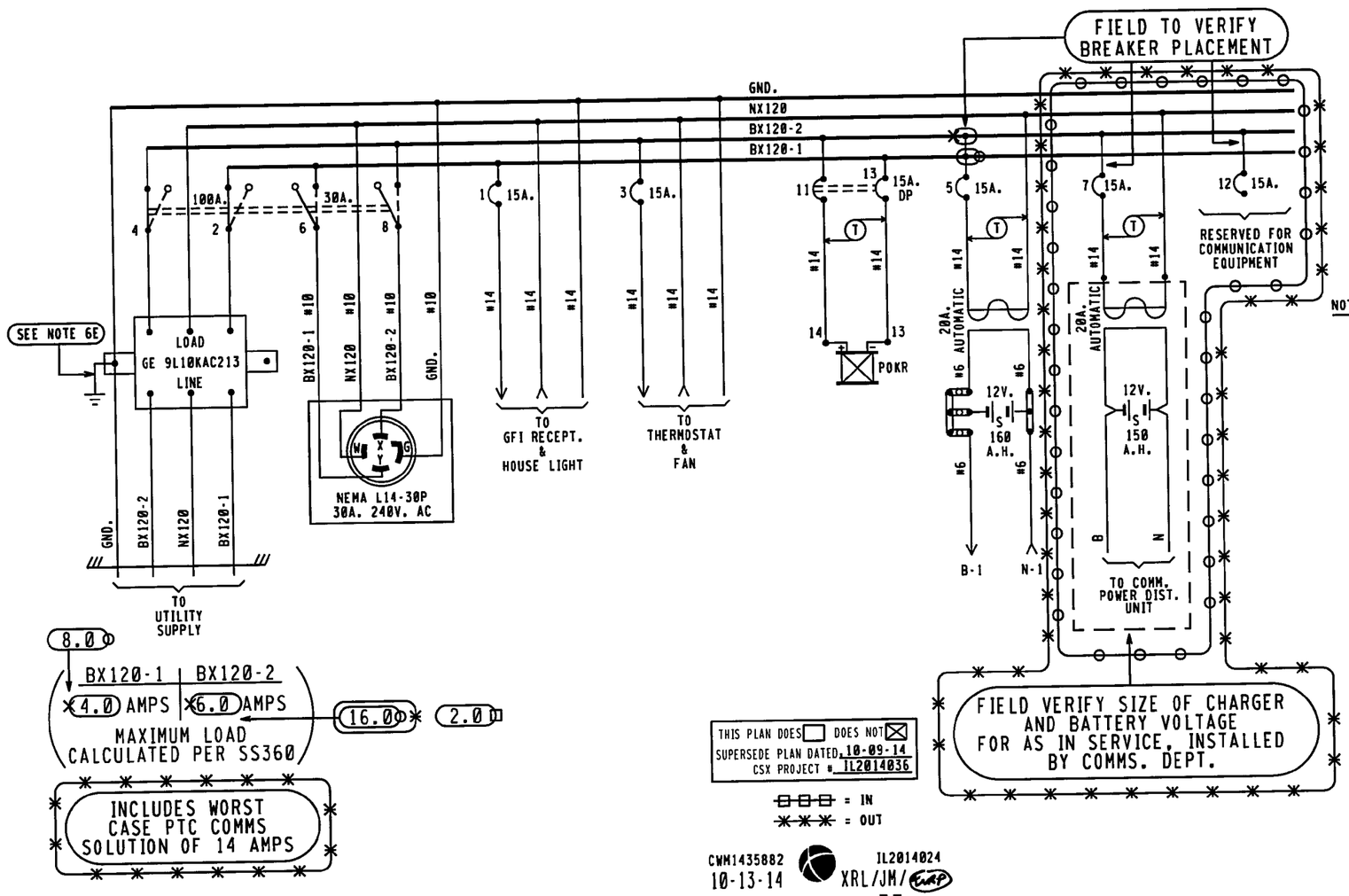

POKR			
9	F	11	N68
10		12	C48

WALL MOUNTED

NOTES:

1 - REFERENCES ARE PER SCMS-13.
2 - ARRESTERS ARE PER SS382.
3 - SHELF RELAY PLACEMENT ON CONSIST CHART HAS NO SIGNIFICANCE.
4 - PLUG-IN RELAYS ARE VIEWED FROM THE FRONT OF RACK.
5 - BATTERY A.H. CAPACITY SHOWN IS THE MINIMUM REQUIREMENT.
6 - WIRING
  A - FEED TO ALL BUSSES, LIGHT CIRCUITS, MOTOR CIRCUITS TO BE #10 FLEX.
  B - 120-VOLT FEED FROM ENTRANCE TO POWER BUSS TO BE #10 FLEX.
  C - ALL TRACK WIRES TO BE #10 FLEX.
  D - ALL OTHERS TO BE #16 FLEX UNLESS NOTED.
  E - GROUND WIRE NOT NECESSARY WHEN GE ARRESTER IS MOUNTED ON GROUND PLANE OR METAL ENCLOSURE AFFIXED DIRECTLY TO BUNGALOW METALLIC STRUCTURAL MEMBER.
7 - CIRCUIT INTERRUPTERS 2 & 4 ARE MECHANICALLY INTERLOCKED WITH CIRCUIT INTERRUPTERS 6 & 8.

= NOTE
= IN
= OUT

THIS PLAN DOES ☐ DOES NOT ☒
SUPERSEDE PLAN DATED 10-09-14
CSX PROJECT # IL2014036

= IN
= OUT

CWM1435882 IL2014024
10-13-14 XRL/JM/
xorail

CWM1437222 IL2014036
10-09-14 XRL/BDB/
xorail

CUT SECTION

6'X 6' RELAY HOUSE

CSX TRANSPORTATION
RAIL TRANSPORT GROUP ENGINEERING
COMMUNICATIONS AND SIGNALS

SIGNALS 183W & 183E

POWER DISTRIBUTION
SMITHBORO, IL M.P. QS-183.80

10-13-14
10-09-14

DESIGN DATE	REV. NO.	DESIGNED	DIGITIZED	CHECKED	DATE
	2	GET/WJB	GET/SAT	GET/JMA	07-23 10
		DRAWING	SHEET NO	FILE	SHEET
		- ---	-----	QS18380	E01

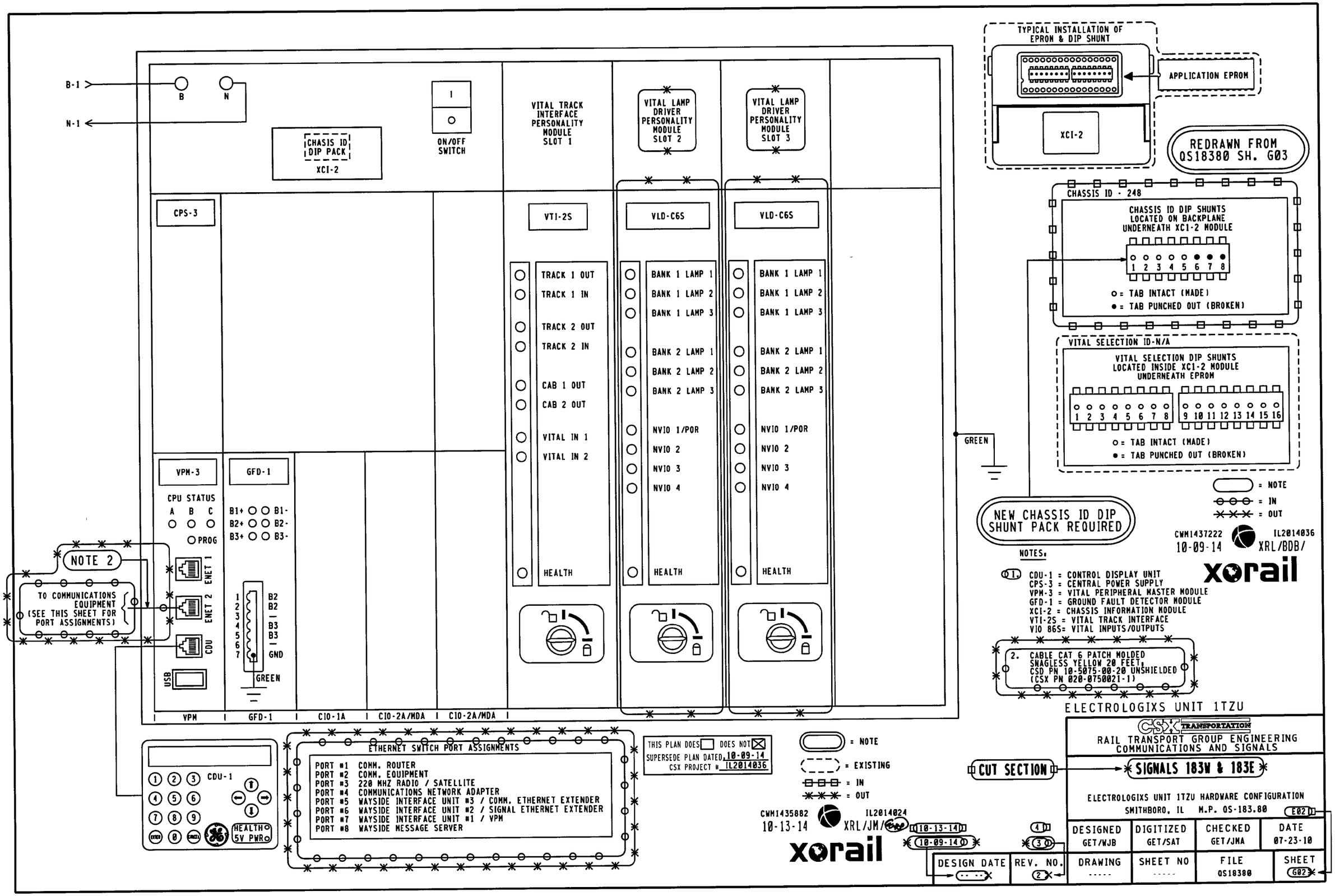
B-1
N-1
B
N
CHASSIS ID DIP PACK
XCI-2
ON/OFF SWITCH
VITAL TRACK INTERFACE PERSONALITY MODULE SLOT 1
VITAL LAMP DRIVER PERSONALITY MODULE SLOT 2
VITAL LAMP DRIVER PERSONALITY MODULE SLOT 3
CPS-3
VTI-2S
VLD-C6S
VLD-C6S
TRACK 1 OUT
TRACK 1 IN
TRACK 2 OUT
TRACK 2 IN
CAB 1 OUT
CAB 2 OUT
VITAL IN 1
VITAL IN 2
HEALTH
BANK 1 LAMP 1
BANK 1 LAMP 2
BANK 1 LAMP 3
BANK 2 LAMP 1
BANK 2 LAMP 2
BANK 2 LAMP 3
NVIO 1/POR
NVIO 2
NVIO 3
NVIO 4
HEALTH
BANK 1 LAMP 1
BANK 1 LAMP 2
BANK 1 LAMP 3
BANK 2 LAMP 1
BANK 2 LAMP 2
BANK 2 LAMP 3
NVIO 1/POR
NVIO 2
NVIO 3
NVIO 4
HEALTH
VPM-3
GFD-1
CPU STATUS
A B C
PROG
B1+ B1-
B2+ B2-
B3+ B3-
ENET 1
ENET 2
CDU
USB
B2
B2
B3
B3
GND
GREEN
NOTE 2
TO COMMUNICATIONS EQUIPMENT (SEE THIS SHEET FOR PORT ASSIGNMENTS)
VPM
GFD-1
CIO-1A
CIO-2A/MDA
CIO-2A/MDA
GREEN
TYPICAL INSTALLATION OF EPROM & DIP SHUNT
APPLICATION EPROM
XCI-2
REDRAWN FROM QS18380 SH. G03
CHASSIS ID - 248
CHASSIS ID DIP SHUNTS LOCATED ON BACKPLANE UNDERNEATH XC1-2 MODULE
1 2 3 4 5 6 7 8
O = TAB INTACT (MADE)
● = TAB PUNCHED OUT (BROKEN)
VITAL SELECTION ID-N/A
VITAL SELECTION DIP SHUNTS LOCATED INSIDE XC1-2 MODULE UNDERNEATH EPROM
1 2 3 4 5 6 7 8
9 10 11 12 13 14 15 16
O = TAB INTACT (MADE)
● = TAB PUNCHED OUT (BROKEN)
NEW CHASSIS ID DIP SHUNT PACK REQUIRED
= NOTE
= IN
= OUT
CWM1437222
10-09-14
IL2014036
XRL/BDB/
xorail
NOTES:
1. CDU-1 = CONTROL DISPLAY UNIT
CPS-3 = CENTRAL POWER SUPPLY
VPM-3 = VITAL PERIPHERAL MASTER MODULE
GFD-1 = GROUND FAULT DETECTOR MODULE
XCI-2 = CHASSIS INFORMATION MODULE
VTI-2S = VITAL TRACK INTERFACE
VIO 86S= VITAL INPUTS/OUTPUTS
2. CABLE CAT 6 PATCH MOLDED SNAGLESS YELLOW 20 FEET, CSD PN 10-5075-00-20 UNSHIELDED (CSX PN 020-0750021-1)
ELECTROLOGIXS UNIT 1TZU
CDU-1
HEALTH
5V PWR
ETHERNET SWITCH PORT ASSIGNMENTS
PORT #1 COMM. ROUTER
PORT #2 COMM. EQUIPMENT
PORT #3 220 MHZ RADIO / SATELLITE
PORT #4 COMMUNICATIONS NETWORK ADAPTER
PORT #5 WAYSIDE INTERFACE UNIT #3 / COMM. ETHERNET EXTENDER
PORT #6 WAYSIDE INTERFACE UNIT #2 / SIGNAL ETHERNET EXTENDER
PORT #7 WAYSIDE INTERFACE UNIT #1 / VPM
PORT #8 WAYSIDE MESSAGE SERVER
THIS PLAN DOES ☐ DOES NOT ☒
SUPERSEDE PLAN DATED 10-09-14
CSX PROJECT # IL2014036
= NOTE
= EXISTING
= IN
= OUT
CWM1435882
10-13-14
IL2014024
XRL/JM/
10-13-14
10-09-14
xorail
CUT SECTION
CSX TRANSPORTATION
RAIL TRANSPORT GROUP ENGINEERING
COMMUNICATIONS AND SIGNALS
SIGNALS 183W & 183E
ELECTROLOGIXS UNIT 1TZU HARDWARE CONFIGURATION
SMITHBORO, IL M.P. QS-183.80
E02
DESIGNED GET/WJB
DIGITIZED GET/SAT
CHECKED GET/JMA
DATE 07-23-10
DESIGN DATE
REV. NO. 2
DRAWING -----
SHEET NO -----
FILE QS18380
SHEET G02

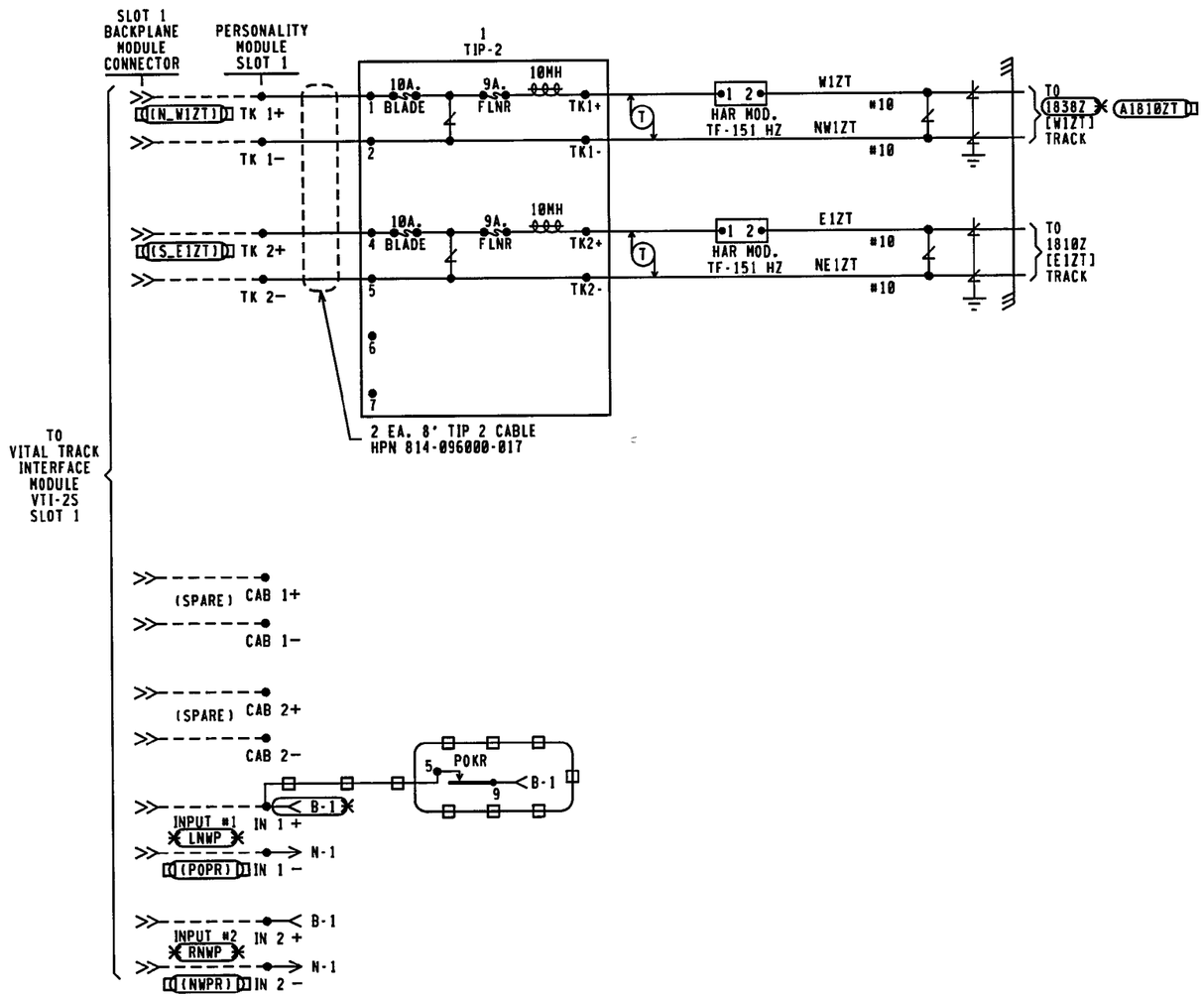

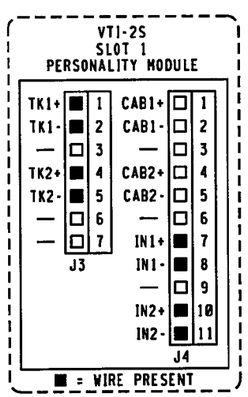

REDRAWN FROM
QS18380
SH. G01

NOTES:

1. [ ] = TAGGING PURPOSES ONLY
2. --- = INTERNAL CONNECTION
3. ALL HOUSE WIRING #14 UNLESS NOTED.

CUT SECTION

= EXISTING
= IN
= OUT

CWM1435882 10-13-14 IL2014024 XRL/JM/ TAP
xorail

NO CHANGES
CWM1437222 10-09-14 IL2014036 XRL/BDB/
xorail

ELECTROLOGIXS UNIT 1TZU

CSX TRANSPORTATION
RAIL TRANSPORT GROUP ENGINEERING
COMMUNICATIONS AND SIGNALS

SIGNALS 183W & 183E

ELECTROLOGIXS UNIT 1TZU TRACK AND VITAL I/O
SMITHBORO, IL M.P. QS 183.80

DESIGNED	DIGITIZED	CHECKED	DATE
GET/WJB	GET/SAT	GET/JMA	07-23-10

DESIGN DATE	REV. NO.	DRAWING	SHEET NO	FILE	SHEET
10-13 14 -----	4 2	-- --	-----	QS18380	C01

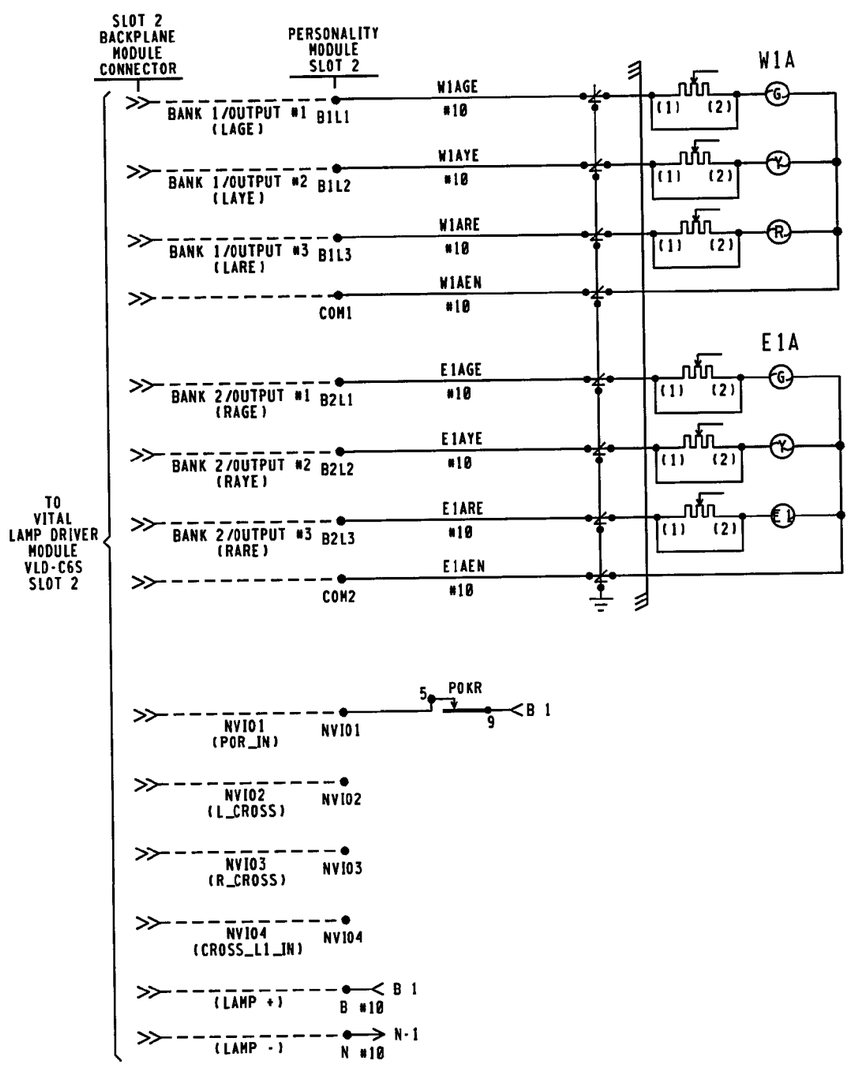

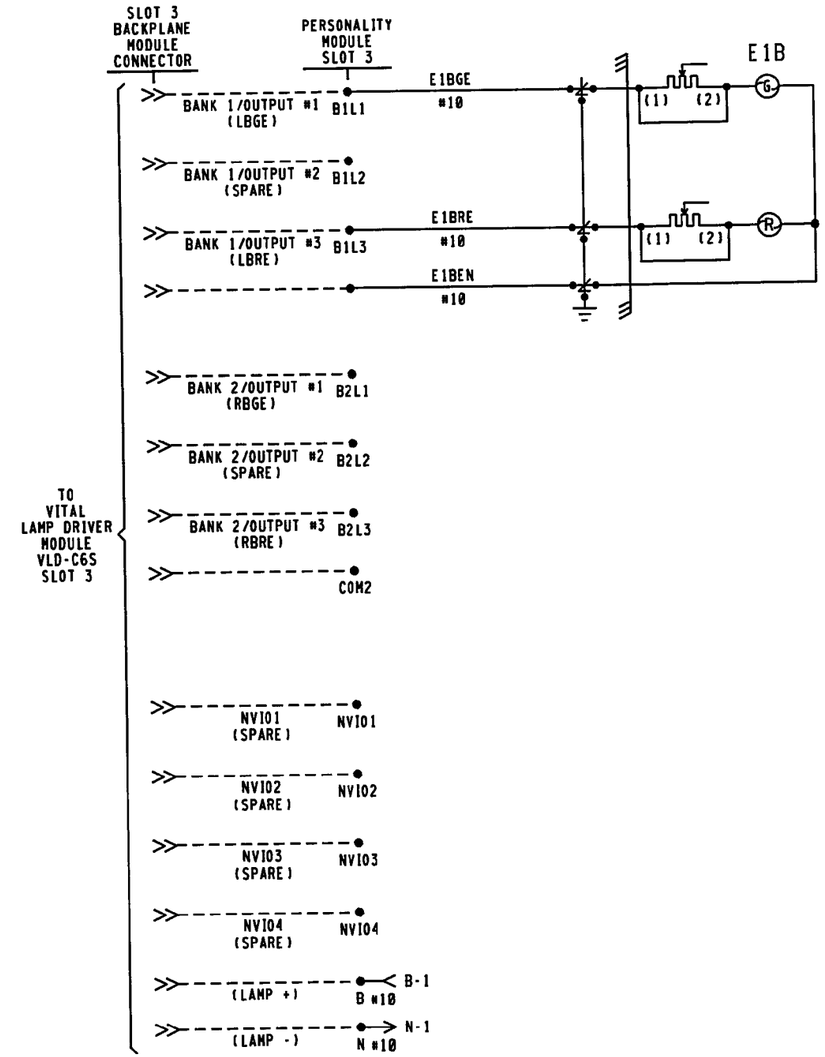

NOTES:

1. ---- = INTERNAL CONNECTION
2. ALL HOUSE WIRING #14 UNLESS NOTED.

ELECTROLOGIXS UNIT 1TZU

WARNING
3 OHM VARIABLE, 15 WATT RESISTORS IN SIGNAL HEADS MUST BE JUMPERED OUT. ALL LAMP VOLTAGE ADJUSTMENTS ARE TO BE DONE VIA THE CONTROL DISPLAY UNIT (CDU-1).

ALL OUT
THIS SHEET IS VOID
WHEN AS IN SERVICED.
CWM1435882 IL2014024
10-13-14 XRL/JM/
xorail

NO CHANGES
CWM1437222 IL2014036
10-09-14 XRL/BDB/
xorail

CSX TRANSPORTATION
RAIL TRANSPORT GROUP ENGINEERING
COMMUNICATIONS AND SIGNALS

SIGNALS 183W & 183E

ELECTROLOGIXS UNIT 1TZU SIGNAL LIGHTING
CIRCUITS AND NON-VITAL I/O
SMITHBORO, IL M.P. QS 183.80

DESIGNED	DIGITIZED	CHECKED	DATE
GET/JME	GET/SAT	GET/JMA	07-23 10

DESIGN DATE	REV. NO.	DRAWING	SHEET NO	FILE	SHEET
-----	2	-----	-----	QS18380	C02