REVISIONS			
NO.	DATE	BY	DESCRIPTION	APP. BY
1				
2				
3				
4				
5				

FLASHING LIGHT UNITS ALIGNMENT TABLE

PRIMARY FRONT LIGHTS FOR VEHICLES							
SIG #	LIGHT #	ROUNDEL		ROAD SPEED	MINIMUM DISTANCE	RECOMMENDED DISTANCE	ALIGNMENT DISTANCE
		SIZE	TYPE	MPH	FT	FT	FT
1	A, B	12"		35	325	550	
2	C, D	12"		35	325	550	
BACK LIGHTS FOR VEHICLES							
SIG #	LIGHT #	ROUNDEL		ROAD SPEED	MINIMUM DISTANCE	RECOMMENDED DISTANCE	ALIGNMENT DISTANCE
		SIZE	TYPE	MPH	FT	FT	FT
1	A1, B1	12"		N/A	N/A	N/A	50
2	C1, D1	12"		N/A	N/A	N/A	50
INTERMEDIATE FRONT LIGHTS FOR VEHICLES							
SIG #	LIGHT #	ROUNDEL		ROAD SPEED	MINIMUM DISTANCE	RECOMMENDED DISTANCE	ALIGNMENT DISTANCE
		SIZE	TYPE	MPH	FT	FT	FT
1	E, F	12"					

NOTE:
FIELD IS TO PROVIDE THE ACTUAL ALIGNMENT DISTANCE AS DETERMINED BY
SCP-706: ROAD CROSSING DEVICE LIGHT UNIT ALIGNMENT PROCEDURES

CONTENT	SHEET NO.
TRACK LAYOUT & INDEX	01
HXP-3 WIRING DIAGRAM	02
HXP-3 PROGRAM CONFIGURATION	03
RECORDER INTERFACE MODULE RIM-2	04
TRACK CIRCUITS	05
POWER	06
CROSSING CONTROLLER	07
SSCC III + PROGRAM SHEET	08
GATE MECHANISM #1	09
GATE MECHANISM #2	10
DIGITAL CRTU WIRING	11

cha-142.36-01.dgn
03-SEP-2015

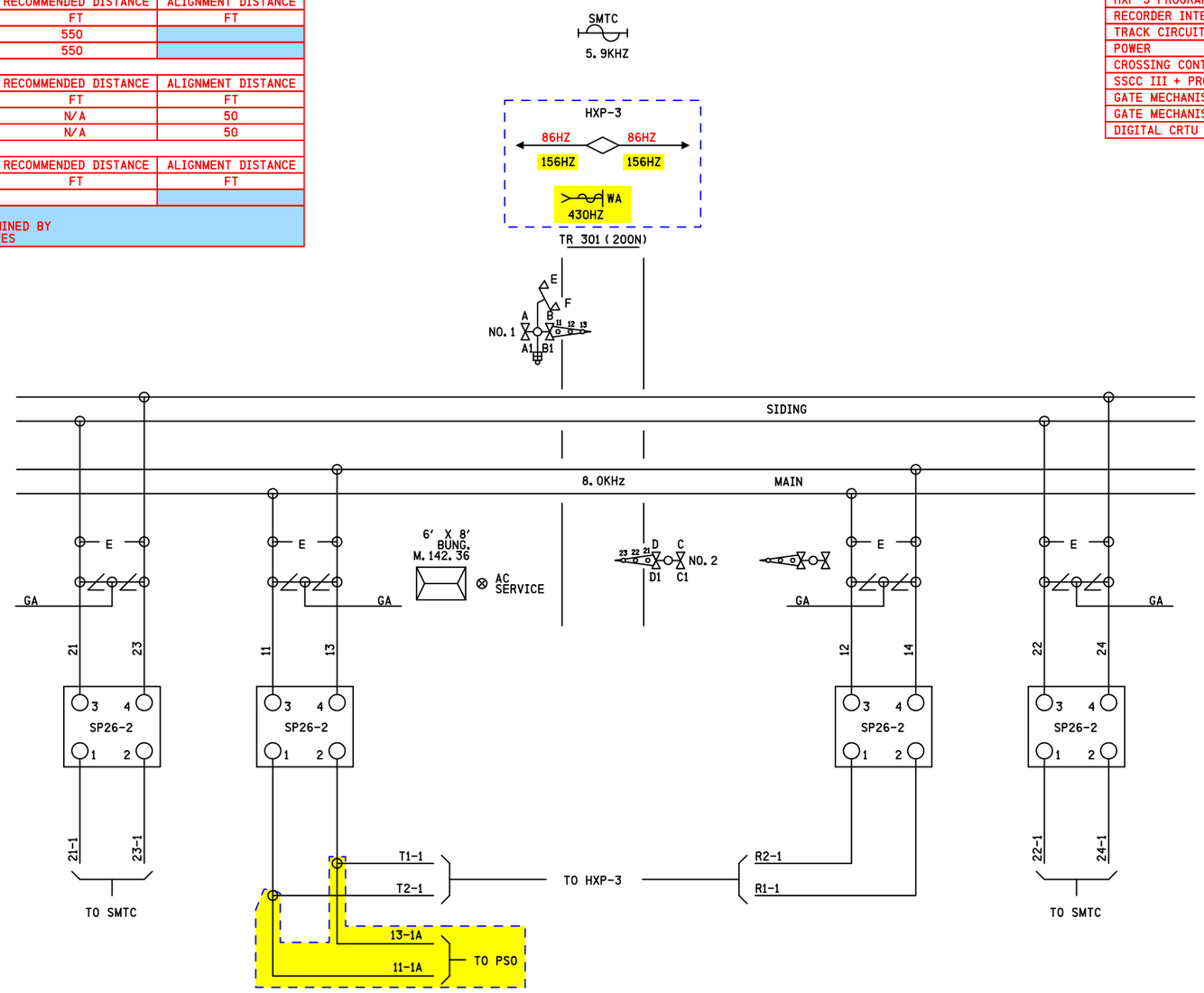

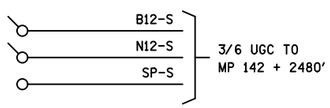

DENOTES PROPOSAL 15-0152
REVISION 29/05/15

TO BE CONFIRMED

CONFIRMED
DATE _____
BY _____
(PRINT NAME)

SII 29 MAY 2015
PROPOSED
DESIGN NO. 15-0152
RED-IN YELLOW-OUT
AS INSTALLED
DATE _____
BY _____
(PRINT NAME)

IRC 04 OCT 2011
PROPOSED
DESIGN NO. 10-0677
RED-IN YELLOW-OUT
AS INSTALLED
DATE _____
BY _____
(PRINT NAME)

PROPOSED D	PROPOSED M	PROPOSED Y	REVISIONS	D	C	COMPLETED D	COMPLETED M	COMPLETED Y	C
			REVISED			13	04	93	
			REVISED			02	02	04	
			REDRAWN			04	10	11	IRC
04	10	11	ADD CRTU	GUK	PWW				
28	05	15	LINCOLN ST CWT UPGRADE	NAD	MRB				

REGION SOUTHERN
SUB. CHAMPAIGN 341
SIGNALS AND COMMUNICATIONS HOMEWOOD
DES. CBV
01 AUGUST 2003
CH.
TRACK LAYOUT
& INDEX
PESOTUM, IL
TR 301
CHA-142.36-01
DOT#289 104H
11 10

SIEMENS INDUSTRY INC
DES. : NAD | DATE: 29/05/15 | JOB NO.: PICA10589
CKD. : MRB | ISSUE DATE: N/A | EST. NO.: XP-7840
DRN. : NAD | PLAN NO.: N/A | SHEET 1 OF 11
P. TIME: 10:30 | P. DATE: 03-SEP-2015 | CAD ID.: CHA-142.36-01

SIEMENS INDUSTRY INC
LOUISVILLE DIVISION, LOUISVILLE, KY

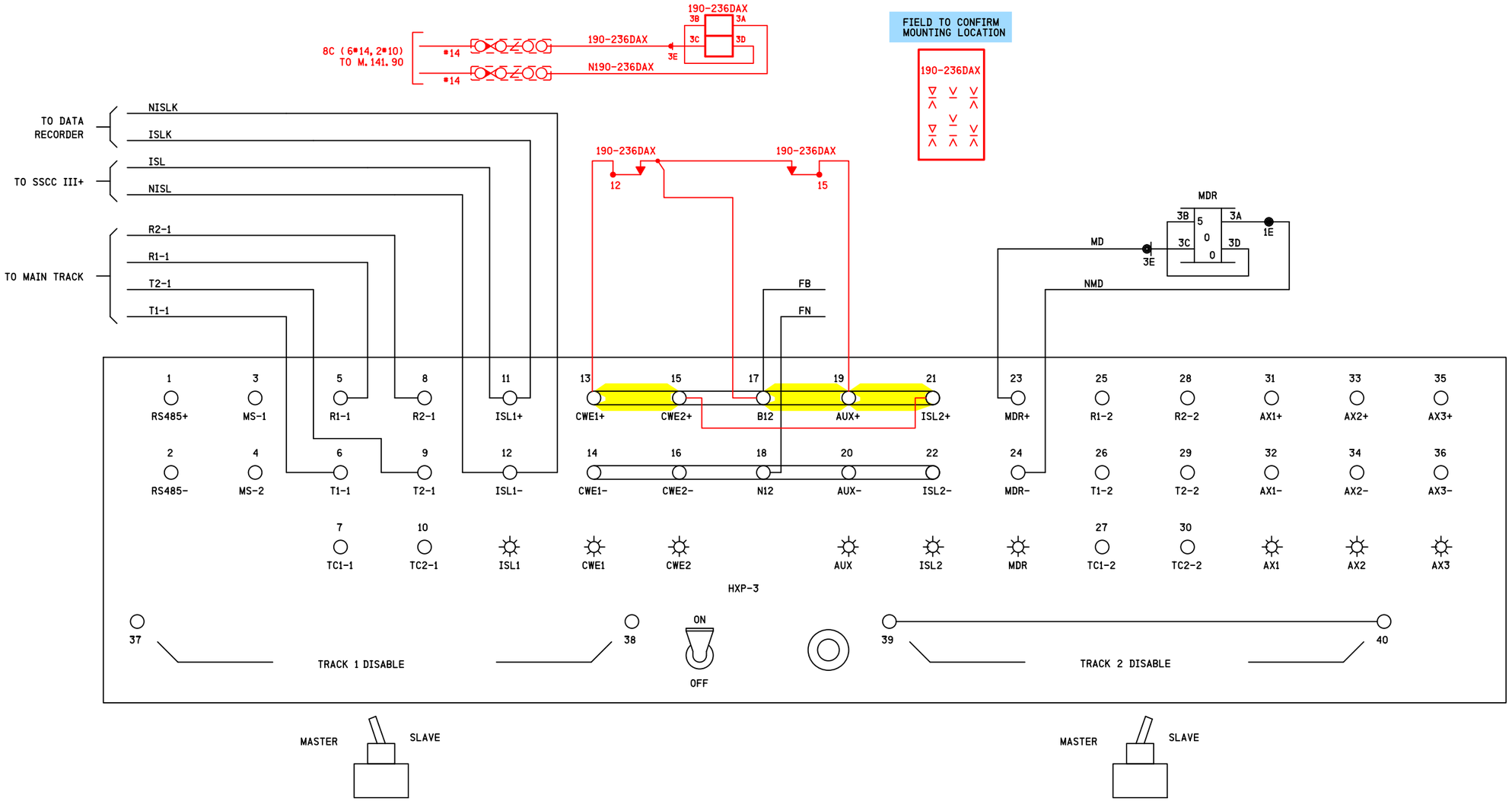

REVISIONS				
NO.	DATE	BY	DESCRIPTION	APP. BY
1				
2				
3				
4				
5				

cha-142.36-02.dgn
03-SEP-2015

TO BE CONFIRMED

CONFIRMED
DATE _____
BY _____
(PRINT NAME)

SII 29 MAY 2015
PROPOSED
DESIGN NO. 15-0152
RED-IN YELLOW-OUT

AS INSTALLED
DATE _____
BY _____
(PRINT NAME)

PROPOSED D	PROPOSED M	PROPOSED Y	REVISIONS	D	C	COMPLETED D	COMPLETED M	COMPLETED Y	C
			REVISED			13	04	93	
			REVISED			02	02	04	
			REDRAWN			04	10	11	IRC
28	05	15	LINCOLN ST CWT UPGRADE	NAD	MRB				

REGION SOUTHERN
SUB. CHAMPAIGN 341
SIGNALS AND COMMUNICATIONS HOMEWOOD
01 AUGUST 2003
DES. CBV
CH.

HXP-3
WIRING DIAGRAM
PESOTUM, IL
TR 301

CHA-142.36-02

DOT#289 104H

SIEMENS INDUSTRY INC

DES. : NAD	DATE: 29/05/15	JOB NO. : PICA10589	
CKD. : MRB	ISSUE DATE: N/A	EST. NO. : XP-7840	
DRN. : NAD	PLAN NO. : N/A	SHEET 2 OF 11	
P TIME: 10:31	P DATE: 03-SEP-2015	CAD ID. : CHA-142.36-02	

SIEMENS INDUSTRY INC
LOUISVILLE DIVISION, LOUISVILLE, KY

REVISIONS				
NO.	DATE	BY	DESCRIPTION	APP. BY
1				
2				
3				
4				
5				

SWITCH INFORMATION

SWITCH	TRACK 1	TRACK 2
MASTER/SLAVE	MASTER	—
RSI FAULT JUMPER	FAULT 0	—
RSI-LOS JUMPER	LOS 0	—

HXP - 3 ADJUSTMENTS

NO.	ADJUSTMENT NAME	TRACK 1	TRACK 2
1	APP. LENGTH	4300 3500	—
2	WARNING TIME	32 30	—
3		0	—
4		0	—
5		0	—

OPTION ADJUSTMENTS

NO.	ABBREVIATION	TRACK 1	TRACK 2
1	TK-ENA	UP	DN
2	TK FO	86 156	—
3	CW / MD	C	—
4	UNI - BI	b	—
5	NBS - C	88%	—
6	CWE-WT	80	—
7	LOS	16	—
8	IJ - LOS	5	—
9	BC	129	—
10	P - COMP	0	—
11	AX1	SEE AX ADJUSTMENTS	
12	AX2		
13	AX3		
17	MDR - AX	dn	—
18	MDR - TMR	10	—
19	MIN - WT	0	—
20	FS - DET	dn	—
21	POS - ST	SEE POS-ST ADJUSTMENTS	
47	ATO - RX	dn	—
48	PF - ENA	dn	—

PROGRAM INFORMATION

PROGRAM VERSION 2.70 OR LATER

* = FIELD ADJUSTMENT TO BE MADE ACCORDING TO THE HXP-3 INSTRUCTION MANUAL.

AX ADJUSTMENTS

NO.	ABBREVIATION	AX 1	AX 2	AX 3
1	TK - ASN	—	—	—
2	OF - TK1	—	—	—
3	OF - TK2	—	—	—
4	WT	—	—	—
5	MD - RST	—	—	—
6	CW / MD	—	—	—
7	CJ - LOS	—	—	—
8	PJ - DET	—	—	—
9	POS - ST	—	—	—

MDR - AX ADJUSTMENTS

NO.	ABBREVIATION	TRACK 1	TRACK 2
1	OF - TK 1 OR 2	—	—
2	CJ - LOS	—	—
3	PJ - DET	—	—

POS - ST ADJUSTMENT

NO.	ABBREVIATION	TRACK 1	TRACK 2
1	POS - RX	74	0
2	POS - TM	90	0

FREQUENCY SELECTION (TRACK 1)

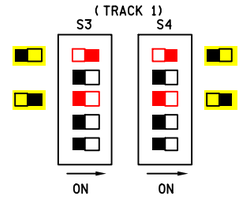

FREQUENCY SELECTION (TRACK 2)

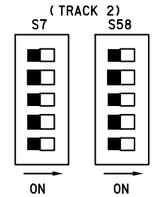

SYSTEM CONFIGURATION (TRACK 1)(TRACK 2)

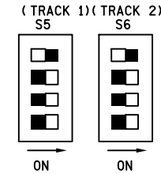

TRACK 2 TRM SLOT MUST BE EMPTY

SII 29 MAY 2015

PROPOSED
DESIGN NO. 15-0152
RED-IN YELLOW-OUT

AS INSTALLED
DATE _____
BY _____
(PRINT NAME)

PROPOSED D	M	Y	REVISIONS	D	C	COMPLETED D	M	Y	C
			REVISED			13	04	93	
			REVISED			02	02	04	
			REDRAWN			04	10	11	IRC
28	05	15	LINCOLN ST CWT UPGRADE	NAD	MRB				

REGION SOUTHERN
SUB. CHAMPAIGN 341
SIGNALS AND COMMUNICATIONS HOMEWOOD
01 AUGUST 2003
DES. CBV
CH.
HXP-3
PROGRAM CONFIGURATION
PESOTUM, IL
TR 301
CHA-142.36-03
DOT#289 104H

SIEMENS INDUSTRY INC
DES.: NAD | DATE: 29/05/15 | JOB NO.: PICA10589
CKD.: MRB | ISSUE DATE: N/A | EST. NO.: XP-7840
DRN.: NAD | PLAN NO.: N/A | SHEET 3 OF 11
P TIME: 10:31 | P DATE: 03-SEP-2015 | CAD ID.: CHA-142.36-03

SIEMENS INDUSTRY INC
LOUISVILLE DIVISION, LOUISVILLE, KY

cha-142.36-03.dgn
03-SEP-2015

REVISIONS				
NO.	DATE	BY	DESCRIPTION	APP. BY
1				
2				
3				
4				
5				

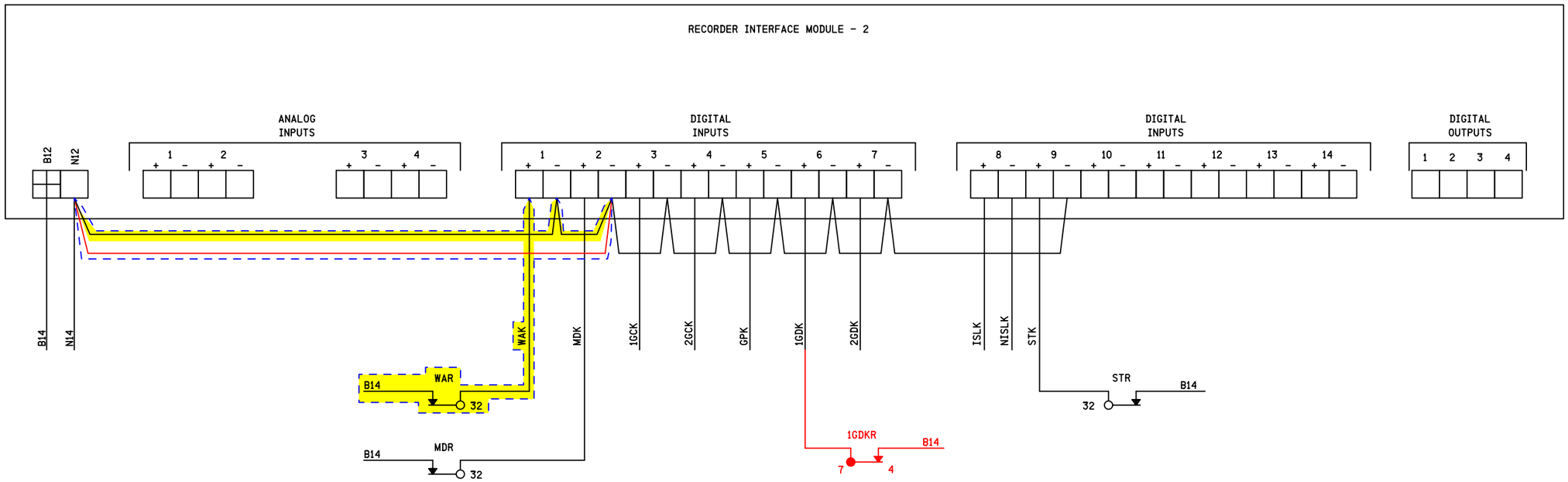

DENOTES PROPOSAL 15-0152
REVISION 29/05/15

SII 29 MAY 2015

PROPOSED
DESIGN NO. 15-0152
RED-IN YELLOW-OUT

AS INSTALLED
DATE _____
BY _____
(PRINT NAME)

IRC 04 OCT 2011

PROPOSED
DESIGN NO. 10-0677
RED-IN YELLOW-OUT

AS INSTALLED
DATE _____
BY _____
(PRINT NAME)

CHECK INPUT WIRING

TO BE CONFIRMED

CONFIRMED
DATE _____
BY _____
(PRINT NAME)

PROPOSED D	PROPOSED M	PROPOSED Y	REVISIONS	D	C	COMPLETED D	COMPLETED M	COMPLETED Y	C
			REVISED			13	04	93	
			REVISED			02	02	04	
			REDRAWN			04	10	11	IRC
04	10	11	ADD CRTU	GUK	PWW				
28	05	15	LINCOLN ST CWT UPGRADE	NAD	MRB				

REGION SOUTHERN
SUB. CHAMPAIGN 341
SIGNALS AND COMMUNICATIONS HOMEWOOD
01 AUGUST 2003
DES. CBV
CH.
RECORDER INTERFACE MODULE
RIM-2
PESOTUM, IL
TR 301
CHA-142.36-04

DOT#289 104H

SIEMENS INDUSTRY INC

DES. : NAD	DATE: 29/05/15	JOB NO. : PICA10589	
CKD. : MRB	ISSUE DATE: N/A	EST. NO. : XP-7840	
DRN. : NAD	PLAN NO. : N/A	SHEET 4 OF 11	
P TIME: 10:31	P DATE: 03-SEP-2015	CAD ID. : CHA-142.36-04	

SIEMENS INDUSTRY INC
LOUISVILLE DIVISION, LOUISVILLE, KY

cha-142.36-04.dgn
03-SEP-2015

REVISIONS				
NO.	DATE	BY	DESCRIPTION	APP. BY
1				
2				
3				
4				
5				

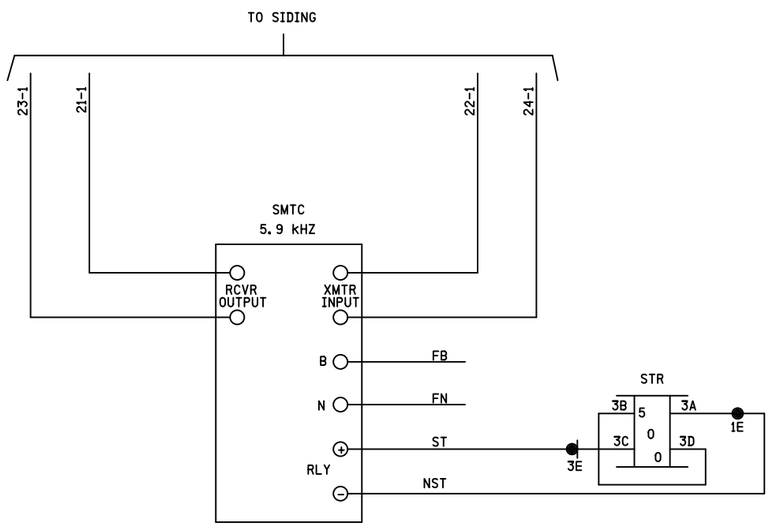

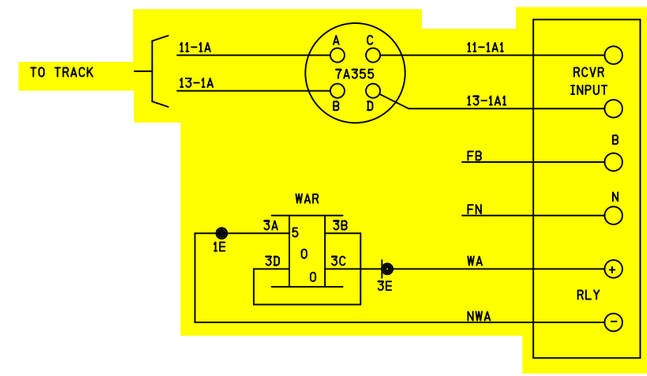

SII 29 MAY 2015

PROPOSED
DESIGN NO. 15-0152
RED-IN YELLOW-OUT

AS INSTALLED
DATE _____
BY _____
(PRINT NAME)

PROPOSED D	PROPOSED M	PROPOSED Y	REVISIONS	D	C	COMPLETED D	COMPLETED M	COMPLETED Y	C
			REVISED			13	04	93	
			REVISED			02	02	04	
			REDRAWN			04	10	11	IRC
28	05	15	LINCOLN ST CWT UPGRADE	NAD	MRB				

REGION SOUTHERN
SUB. CHAMPAIGN 341

SIGNALS AND COMMUNICATIONS HOMEWOOD
01 AUGUST 2003
DES. CBV
CH.

TRACK CIRCUITS

PESOTUM, IL
TR 301

CHA-142.36-05

DOT#289 104H

SIEMENS INDUSTRY INC

DES.: NAD	DATE: 29/05/15	JOB NO.: PICA10589	
CKD.: MRB	ISSUE DATE: N/A	EST. NO.: XP-7840	
DRN.: NAD	PLAN NO.: N/A	SHEET 5 OF 11	
P TIME: 10:31	P DATE: 03-SEP-2015	CAD ID.: CHA-142.36-05	

SIEMENS INDUSTRY INC
LOUISVILLE DIVISION, LOUISVILLE, KY

cha-142.36-05.dgn
03-SEP-2015

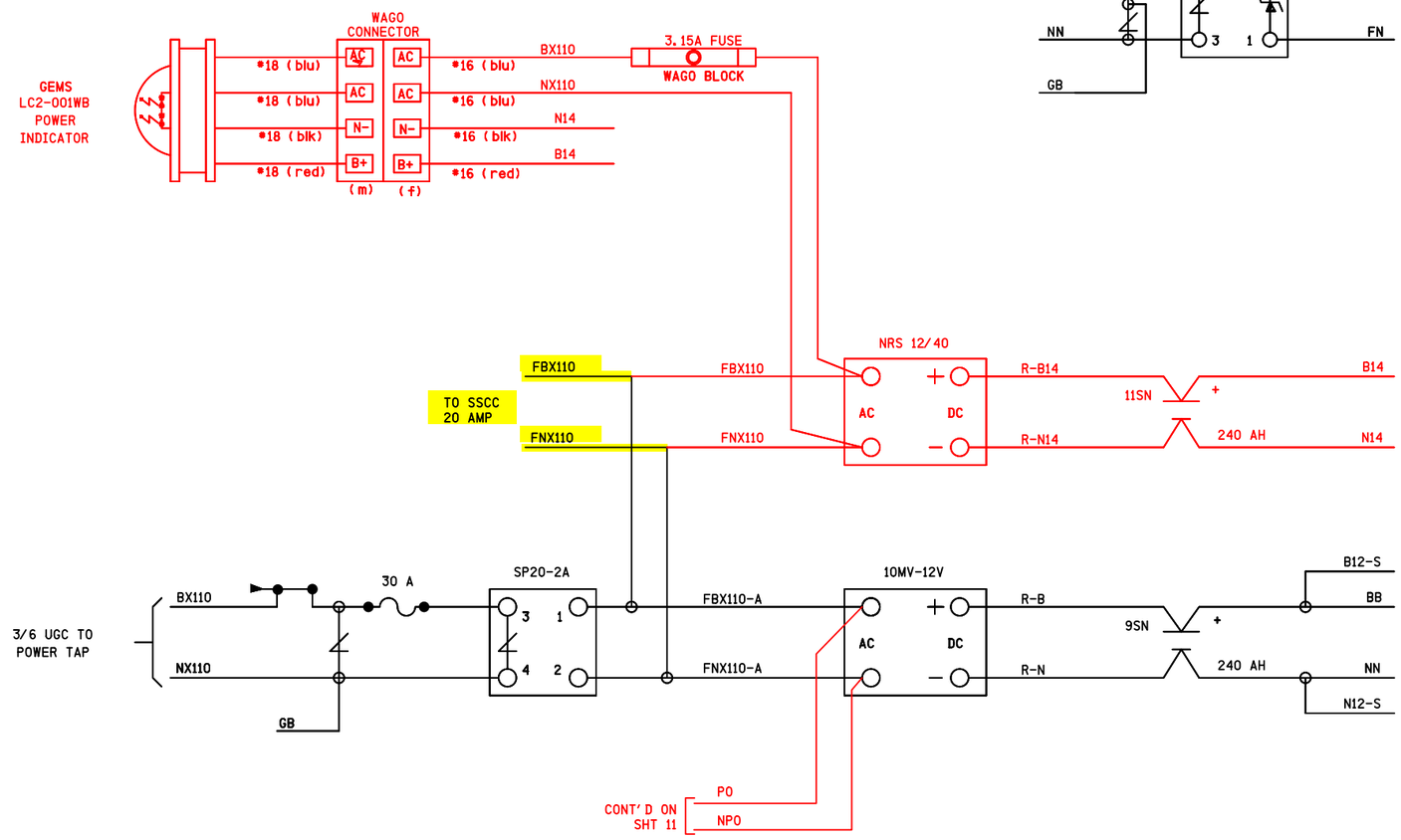

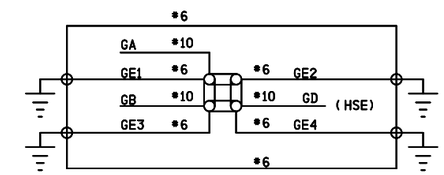

REVISIONS			
NO.	DATE	BY	DESCRIPTION	APP. BY
1				
2				
3				
4				
5				

SIEMENS INDUSTRY INC

DES. : NAD	DATE: 29/05/15	JOB NO.: PICA10589	
CKD. : MRB	ISSUE DATE: N/A	EST. NO.: XP-7840	
DRN. : NAD	PLAN NO.: N/A	SHEET 6 OF 11	
P. TIME: 10:31	P. DATE: 03-SEP-2015	CAD ID.: CHA-142.36-06	

IRC 04 OCT 2011

PROPOSED
DESIGN NO. 10-0677
RED-IN YELLOW-OUT

AS INSTALLED
DATE _____
BY _____
(PRINT NAME)

PROPOSED D	PROPOSED M	PROPOSED Y	REVISIONS	D	C	COMPLETED D	COMPLETED M	COMPLETED Y	C
			REDRAWN			04	10	11	IRC
04	10	11	ADD CRTU	GUK	PWW				

REGION SOUTHERN
SUB. CHAMPAIGN 341

SIGNALS AND COMMUNICATIONS HOMEWOOD
16 JANUARY 2006
DES. AVS
CH.

POWER

PESOTUM, IL
TR 301

CHA-142.36-06

DOT#289 104H

SIEMENS INDUSTRY INC
LOUISVILLE DIVISION, LOUISVILLE, KY

cha-142.36-06.dgn
03-SEP-2015

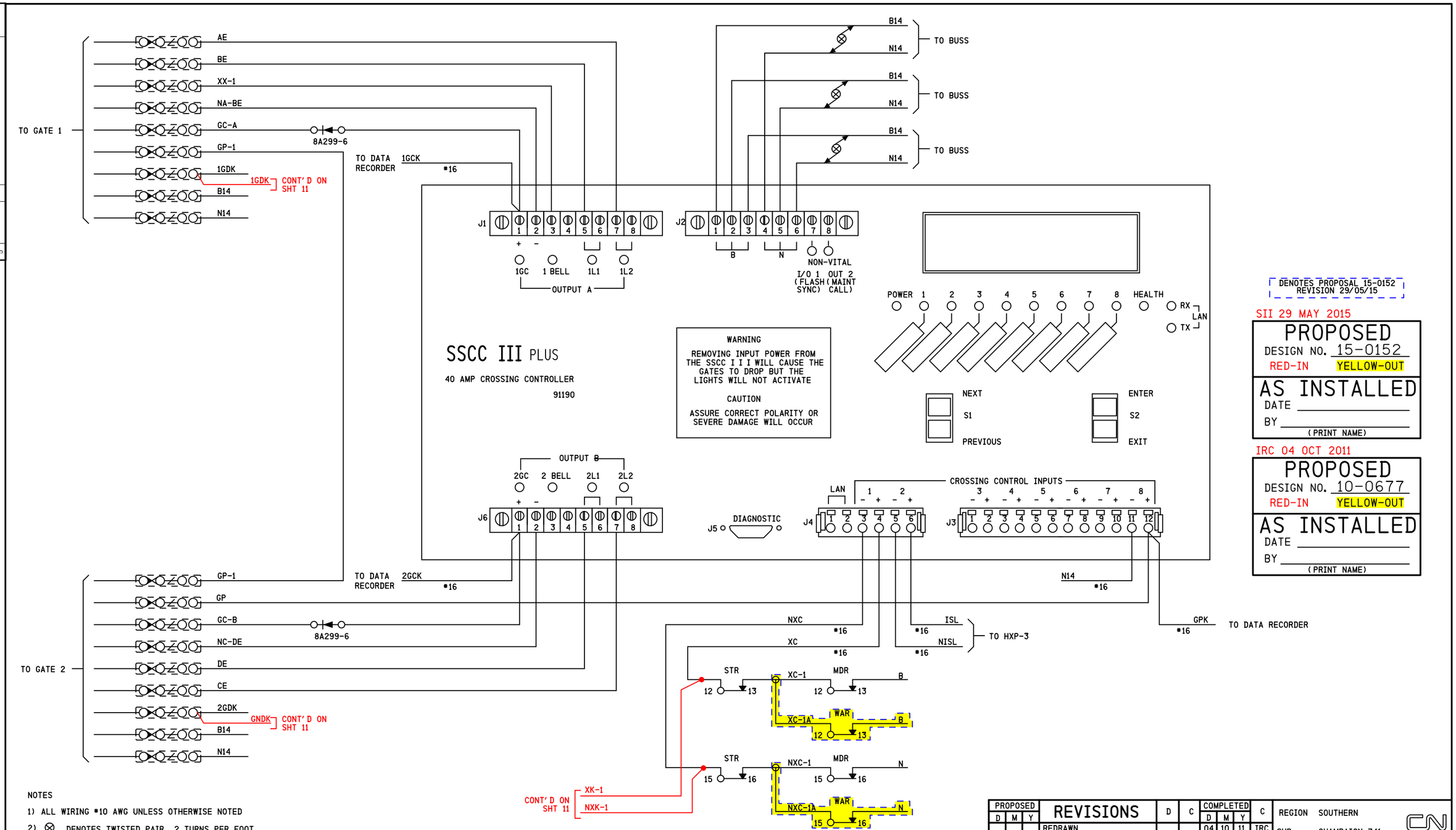

DENOTES PROPOSAL 15-0152 REVISION 29/05/15

SII 29 MAY 2015

PROPOSED
DESIGN NO. 15-0152
RED-IN YELLOW-OUT

AS INSTALLED
DATE
BY
(PRINT NAME)

IRC 04 OCT 2011

PROPOSED
DESIGN NO. 10-0677
RED-IN YELLOW-OUT

AS INSTALLED
DATE
BY
(PRINT NAME)

NOTES

1) ALL WIRING #10 AWG UNLESS OTHERWISE NOTED
2) ⊗ DENOTES TWISTED PAIR, 2 TURNS PER FOOT
3) —◄— DENOTES TEST LINK, IF INSTALLED
4) —|◄— DENOTES DIODE - SAFETRAN 8A299-6
5) MULTI-UNIT TERMINAL BLOCK
6) IF LINK IS CONNECTED BETWEEN XB12 AND TESTSWK, GATES WILL REMAIN UP
7) ALL ECHELON WIRING TO BE #18 BELDEN CABLE

REVISIONS					
NO.	DATE	BY	DESCRIPTION	APP.	BY
1					
2					
3					
4					
5					

SIEMENS INDUSTRY INC

DES. : NAD	DATE: 29/05/15	JOB NO. : PICA10589	
CKD. : MRB	ISSUE DATE: N/A	EST. NO. : XP-7840	
DRN. : NAD	PLAN NO. : N/A	SHEET 7 OF 11	
P. TIME: 10:31	P. DATE: 03-SEP-2015	CAD ID. : CHA-142.36-07	

PROPOSED D	M	Y	REVISIONS	D	C	COMPLETED D	M	Y	C
			REDRAWN			04	10	11	IRC
04	10	11	ADD CRTU	GUK	PWW				
28	05	15	LINCOLN ST CWT UPGRADE	NAD	MRB				

REGION SOUTHERN
SUB. CHAMPAIGN 341

SIGNALS AND COMMUNICATIONS HOMEWOOD
16 JANUARY 2006
DES. AVS
CH.

CROSSING CONTROLLER
PESOTUM, IL
TR 301

CHA-142.36-07

DOT#289 104H

SIEMENS INDUSTRY INC
LOUISVILLE DIVISION, LOUISVILLE, KY

cha-142.36-07.dgn
03-SEP-2015

REVISIONS			
NO.	DATE	BY	DESCRIPTION	APP. BY
1				
2				
3				
4				
5				

CROSSING CONTROLLER SSCCIII 40-AMPERE UNIT, 91190

SOFTWARE VERSION: 9V546-A01.J

PROGRAM	NOTES	INITIAL SETTING BY: _____ DATE: __/__/____
FLASH RATE:	30-70 FLASHES/MINUTE DEFAULT = 50	55 FLASHES/MINUTE
GATES USED:	YES/NO DEFAULT = YES	■ YES ☐ NO
1 GC DELAY:	3-20 SEC. DEFAULT = 4	3 SECONDS
2 GC DELAY (40 AMP UNIT):	3-20 SEC. DEFAULT = 4	3 SECONDS
GATE RISING BELL:	ON/OFF DEFAULT = ON	■ ON ☐ OFF
ENABLED INPUTS:	1 THRU 7 ONLY	■ 1 ■ 2 ☐ 3 ☐ 4 ☐ 5 ☐ 6 ☐ 7
ADV PRE-EMPT TIME (40A):	1-99 SEC. DEFAULT = 1	N/A SECONDS
MIN ACTIVATION TIME:	0-99 SEC. DEFAULT = 20	20 SECONDS
STICK RELEASE TIME:	5-120 MIN. DEFAULT = 15	N/A MINUTES
ENABLED OUTPUTS: (40 amp only)	DEFAULT = A + B	■ A + B ☐ A ☐ B
DAYLIGHT SAVINGS:	DEFAULT = DISABLED	■ ENABLED ☐ DISABLED
DATE:	N/A	☐ DATE SET
TIME:	24-FORMAT	☐ TIME SET
PASSWORD:	DEFAULT = DISABLED	☐ ENABLED ■ DISABLED

CONFIGURE		
LOS TIMERS:	0-20 SEC. DEFAULT = 0 INPUTS 1-7 ONLY	1: 0 SEC 5: 0 SEC 2: 0 SEC 6: 0 SEC 3: 0 SEC 7: 0 SEC 4: 0 SEC
MCF:		MCF: BASICPLS CRC: _____
ATCS ADDRESS:	DEFAULT = 700000000000	_____
LOW BATTERY:	9.0-15.0 VOLTS, OR DISABLED DEFAULT = DISABLED	■ DISABLED ☐ ENABLED . VOLTS
AUX I/O:	DEFAULT = NONVITAL OUTPUT	■ NV OUTPUT ☐ FLASH SYNC IN ☐ FLASH SYNC OUT

TEST CONFIGURE		
LAMP TEST CANCEL TIMER:	1-15 MIN. DEFAULT = 5	5 MINUTES
LAMP TEST DELAY TIMER:	30-120 SEC. DEFAULT = 30	30 SECONDS
LAMP TEST ON TIMER:	15-60 SEC. DEFAULT = 15	15 SECONDS

STANDARD SETUP LAMP VOLTAGES PROCEDURE
USING TRUE RMS AC+DC METER, OR CONVERSION TABLE BELOW

SETUP LAMP VOLTAGES	INITIAL SETTING BY: _____ DATE: __/__/____ METER: FLUKE 87
FAR SIGNAL (SIG.#1)	1 L1 = . VOLTS 1 L2 = . VOLTS 2 L1 = N/A VOLTS 2 L2 = N/A VOLTS
SSCCIV	1 L1 = . VOLTS 1 L2 = . VOLTS 2 L1 = N/A VOLTS 2 L2 = N/A VOLTS
NEAR SIGNAL (SIG.#2)	1 L1 = . VOLTS 1 L2 = . VOLTS 2 L1 = N/A VOLTS 2 L2 = N/A VOLTS

MULTIMETER READING VARIANCE FROM ACTUAL LAMP VOLTAGE

BATTERY BANK VOLTAGE	VALID LAMP OUTPUT RANGE (In volts)	DIGITAL METER (FLUKE 87 OR EQUIVALENT)	ANALOG METER (SIMPSON 260 OR TS111)
13.3	9.0 TO 12.0	1.3 VOLTS BELOW ACTUAL VALUE	0.6 VOLTS BELOW ACTUAL VALUE
14.7	9.0 TO 12.0	2.2 VOLTS BELOW ACTUAL VALUE	1.1 VOLTS BELOW ACTUAL VALUE
15.8	9.0 TO 12.0	2.6 VOLTS BELOW ACTUAL VALUE	2.0 VOLTS BELOW ACTUAL VALUE

FOR LAMP OUTPUT SETTINGS GREATER THAN 12.0 VOLTS, REDUCE THE LISTED VALUES BY 30%
LAMP VOLTAGE MEASUREMENTS SHOULD BE ACCURATE TO 0.3 VOLTS.

SIEMENS INDUSTRY INC			
DES.: NAD	DATE: 29/05/15	JOB NO.: PICA10589	
CKD.: MRB	ISSUE DATE: N/A	EST. NO.: XP-7840	
DRN.: NAD	PLAN NO.: N/A	SHEET 8 OF 11	
P. TIME: 10:31	P. DATE: 03-SEP-2015	CAD ID.: CHA-142.36-08	

PROPOSED D	M	Y	REVISIONS	D	C	COMPLETED D	M	Y	C
			REDRAWN			04	10	11	IRC

REGION SOUTHERN
SUB. CHAMPAIGN 341

SIGNALS AND COMMUNICATIONS HOMEWOOD
16 JANUARY 2006
DES. AVS
CH.
SSCC III + PROGRAM SHEET
PESOTUM, IL
TR 301

CHA-142.36-08

DOT#289 104H

SIEMENS INDUSTRY INC
LOUISVILLE DIVISION, LOUISVILLE, KY

cha-142.36-08.dgn
03-SEP-2015

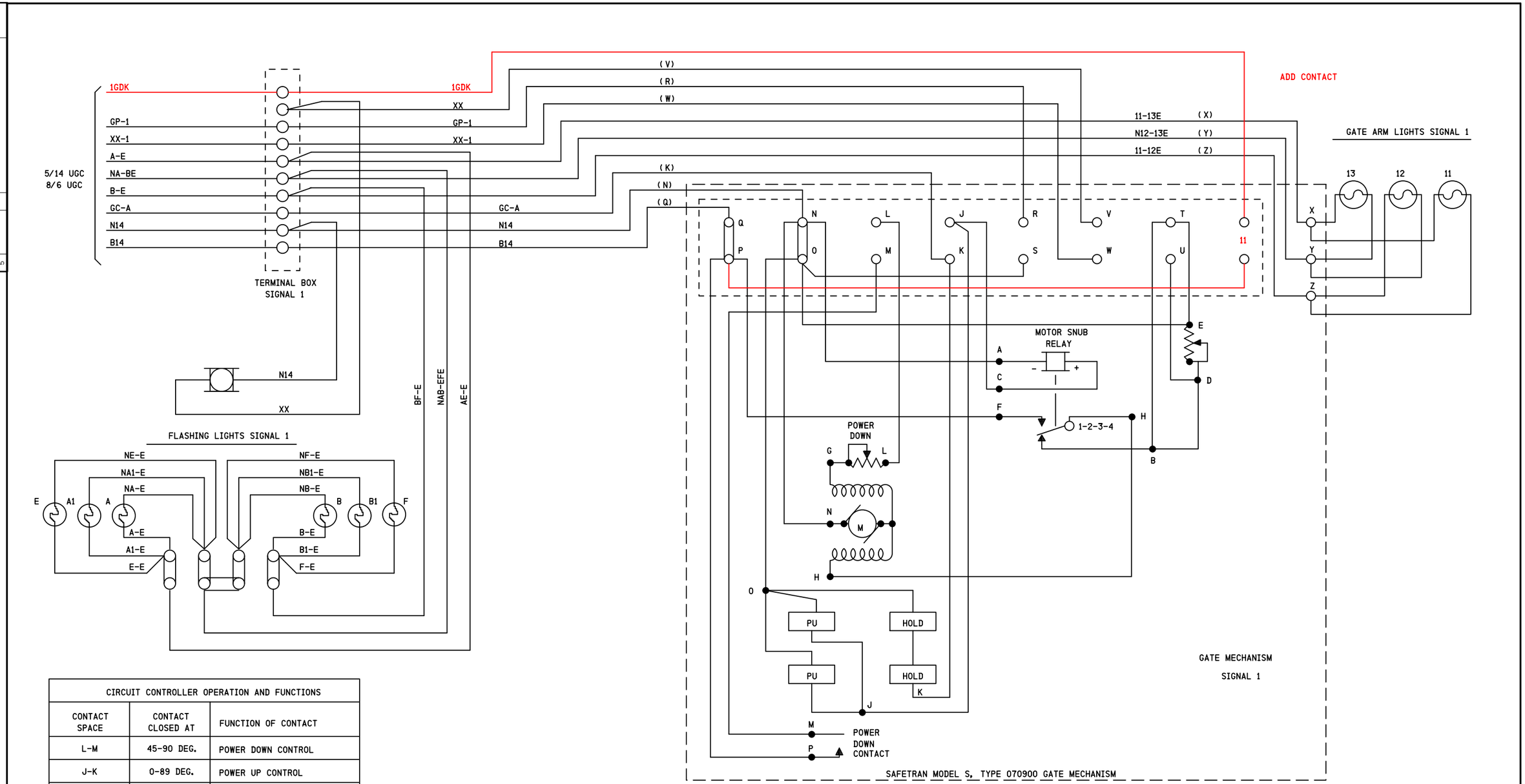

CIRCUIT CONTROLLER OPERATION AND FUNCTIONS		
CONTACT SPACE	CONTACT CLOSED AT	FUNCTION OF CONTACT
L-M	45-90 DEG.	POWER DOWN CONTROL
J-K	0-89 DEG.	POWER UP CONTROL
R-S	83-90 DEG.	GPXR CONTROL
V-W	5-90 DEG.	BELL
T-U	0-5 DEG.	MOTOR SNUB CONTROL

IRC 04 OCT 2011

PROPOSED
DESIGN NO. 10-0677
RED-IN YELLOW-OUT

AS INSTALLED
DATE _____
BY _____
(PRINT NAME)

PROPOSED D	PROPOSED M	PROPOSED Y	REVISIONS	D	C	COMPLETED D	COMPLETED M	COMPLETED Y	C
			REDRAWN			04	10	11	IRC
04	10	11	ADD CRTU	GUK	PWW				

REGION SOUTHERN
SUB. CHAMPAIGN 341

SIGNALS AND COMMUNICATIONS HOMEWOOD
16 JANUARY 2006
DES. AVS
CH.

GATE MECHANISM #1

PESOTUM, IL
TR 301

CHA-142.36-09

DOT#289 104H

REVISIONS			
NO.	DATE	BY	DESCRIPTION	APP. BY
1				
2				
3				
4				
5				

SIEMENS INDUSTRY INC

DES. : NAD	DATE: 29/05/15	JOB NO.: PICA10589	
CKD. : MRB	ISSUE DATE: N/A	EST. NO.: XP-7840	
DRN. : NAD	PLAN NO.: N/A	SHEET 9 OF 11	
P TIME: 10:31	P DATE: 03-SEP-2015	CAD ID.: CHA-142.36-09	

SIEMENS INDUSTRY INC
LOUISVILLE DIVISION, LOUISVILLE, KY

cha-142.36-09.dgn
03-SEP-2015

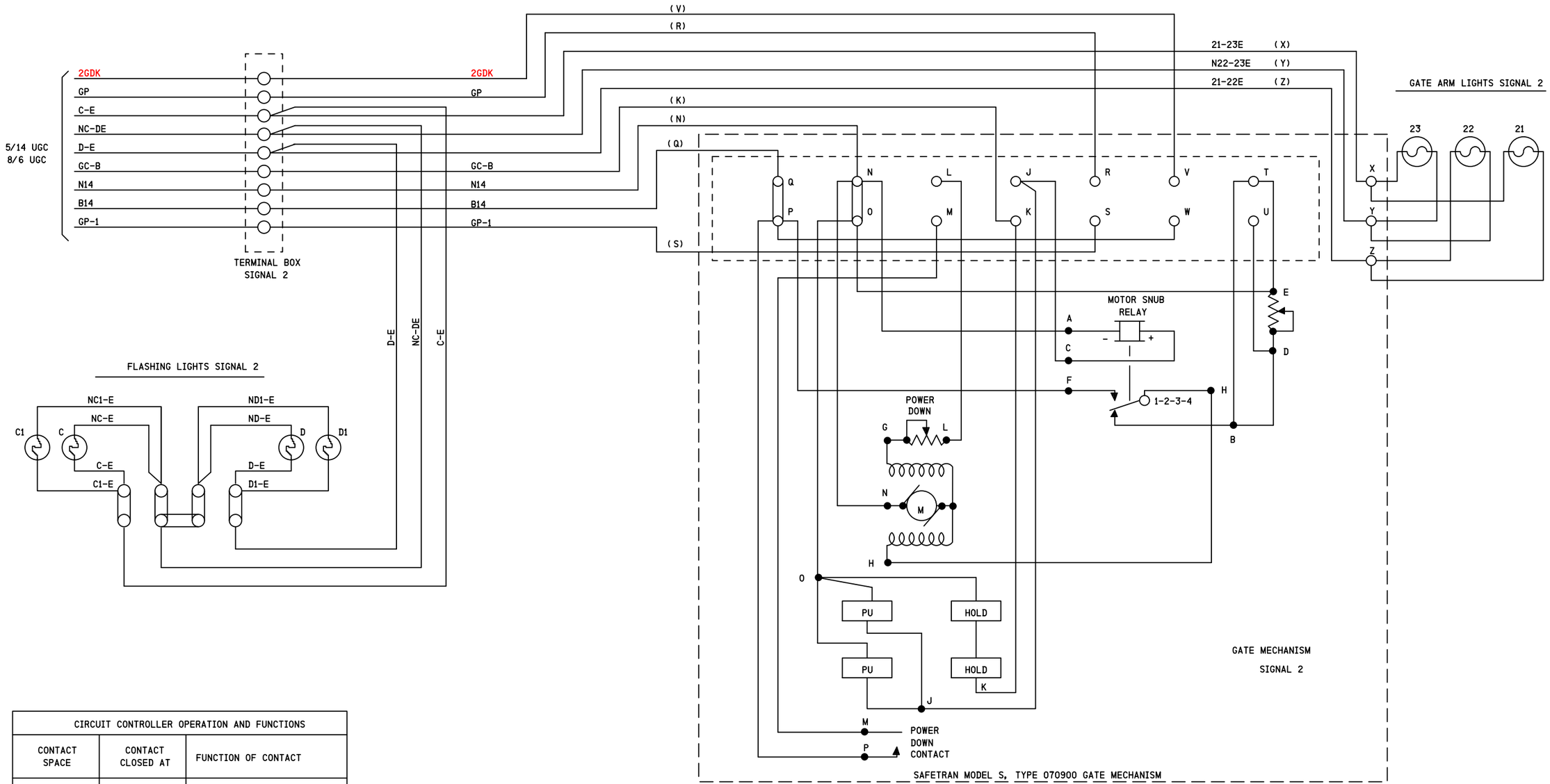

CIRCUIT CONTROLLER OPERATION AND FUNCTIONS		
CONTACT SPACE	CONTACT CLOSED AT	FUNCTION OF CONTACT
L-M	45-90 DEG.	POWER DOWN CONTROL
J-K	0-89 DEG.	POWER UP CONTROL
R-S	83-90 DEG.	GPXR CONTROL
V-W	5-90 DEG.	GDK
T-U	0-5 DEG.	MOTOR SNUB CONTROL

IRC 04 OCT 2011

PROPOSED
DESIGN NO. 10-0677
RED-IN YELLOW-OUT

AS INSTALLED
DATE _____
BY _____
(PRINT NAME)

PROPOSED D	PROPOSED M	PROPOSED Y	REVISIONS	D	C	COMPLETED D	COMPLETED M	COMPLETED Y	C
			REDRAWN			04	10	11	IRC
04	10	11	ADD CRTU	GUK	PWW				

REGION SOUTHERN
SUB. CHAMPAIGN 341

SIGNALS AND COMMUNICATIONS HOMEWOOD
16 JANUARY 2006
DES. AVS
CH.

GATE MECHANISM #2
TR 301
PESOTUM, IL
CHA-142.36-10

DOT#289 104H

10

REVISIONS				
NO.	DATE	BY	DESCRIPTION	APP. BY
1				
2				
3				
4				
5				

SIEMENS INDUSTRY INC

DES.: NAD	DATE: 29/05/15	JOB NO.: PICA10589	
CKD.: MRB	ISSUE DATE: N/A	EST. NO.: XP-7840	
DRN.: NAD	PLAN NO.: N/A	SHEET 10 OF 11	
P TIME: 10:32	P DATE: 03-SEP-2015	CAD ID.: CHA-142.36-10	

SIEMENS INDUSTRY INC
LOUISVILLE DIVISION, LOUISVILLE, KY

cha-142.36-10.dgn
03-SEP-2015

NO.	DATE	BY	DESCRIPTION	APP. BY
1				
2				
3				
4				
5				

REVISIONS

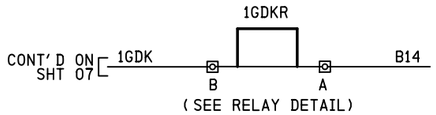

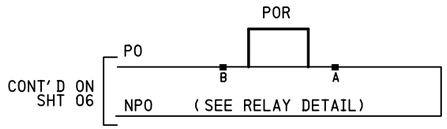

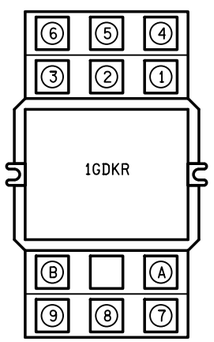

RELAY DETAIL

RELAY - POTTER & BRUMFIELD
MODEL KUP-14D15-12 SOCKET MOUNTABLE
12 VDC W/ 3 FORM C CONTACTS.

SOCKET - SCREW TERMINAL
MODEL 27E121.

RELAY WIRING DIAGRAM (REAR VIEW)

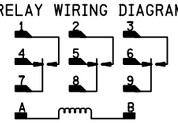

NOTE:
SOCKET NUMBERING CORRESPONDS
DIRECTLY WITH RELAY NUMBERING.
(COIL SHOWN ENERGIZED)

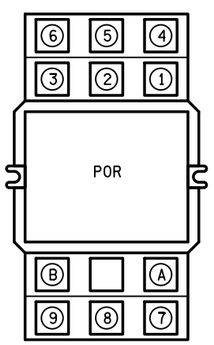

RELAY DETAIL A

RELAY - POTTER & BRUMFIELD
MODEL KUP-14A15-120 SOCKET MOUNTABLE
120 VAC W/ 3 FORM C CONTACTS.

SOCKET - SCREW TERMINAL
MODEL 27E121

RELAY WIRING DIAGRAM (REAR VIEW)

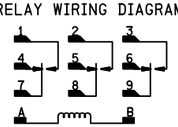

NOTE
SOCKET NUMBERING CORRESPONDS
DIRECTLY WITH RELAY NUMBERING.
(COIL SHOWN ENERGIZED)

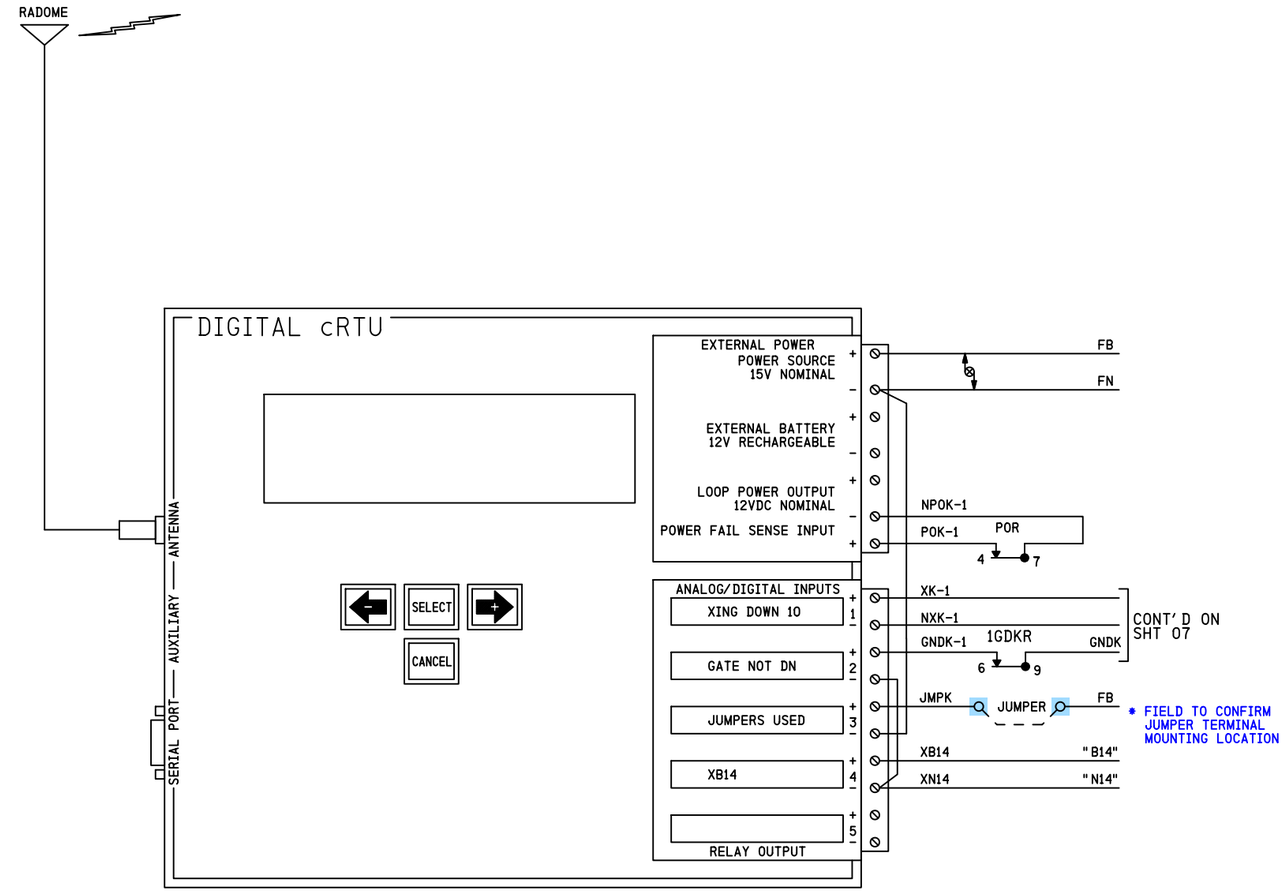

CONFIGKEY:	31
MODEL:	C06C/2ANA V2.X
SERIAL #:	
SITE IDENTIFIER:	289 104H

* FIELD TO PROVIDE SERIAL *

	LOW ALARM	RETURN	HIGH ALARM	RETURN
B12	11.6	12.6	15.6	14.6
B14	13.8	14.8	17.8	16.8

IRC 04 OCT 2011

PROPOSED
DESIGN NO. 10-0677
RED-IN YELLOW-OUT

AS INSTALLED
DATE _____
BY _____
(PRINT NAME)

NOTES

1) ALL WIRING TO BE #16 AWG MINIMUM UNLESS OTHERWISE NOTED

DENOTES TWISTED PAIR

PROPOSED D	M	Y	REVISIONS	D	C	COMPLETED D	M	Y	C

REGION SOUTHERN
SUB. CHAMPAIGN 341

SIGNALS AND COMMUNICATIONS HOMEWOOD
DES. GUK
04 OCTOBER 2011
CH. PWW

DIGITAL CRTU WIRING

PESOTUM, IL
TR 301

CHA-142.36-11

DOT#289 104H

11

SIEMENS INDUSTRY INC

DES.: NAD	DATE: 29/05/15	JOB NO.: PICA10589	
CKD.: MRB	ISSUE DATE: N/A	EST. NO.: XP-7840	
DRN.: NAD	PLAN NO.: N/A	SHEET 11 OF 11	
P TIME: 10:32	P DATE: 03-SEP-2015	CAD ID.: CHA-142.36-11	

SIEMENS INDUSTRY INC
LOUISVILLE DIVISION, LOUISVILLE, KY

cha-142.36-11.dgn
03-SEP-2015