REVISIONS			
NO.	DATE	BY	DESCRIPTION	APP. BY
1				
2				
3				
4				
5				

FLASHING LIGHT UNITS ALIGNMENT TABLE

PRIMARY FRONT LIGHTS FOR VEHICLES							
SIG #	LIGHT #	ROUNDEL		ROAD SPEED	MINIMUM DISTANCE	RECOMMENDED DISTANCE	ALIGNMENT DISTANCE
		SIZE	TYPE	MPH	FT	FT	FT
1	1,2	12"	LED	30	270	450	
2	7,8	12"	LED	30	270	450	
BACK LIGHTS FOR VEHICLES							
SIG #	LIGHT #	ROUNDEL		ROAD SPEED	MINIMUM DISTANCE	RECOMMENDED DISTANCE	ALIGNMENT DISTANCE
		SIZE	TYPE	MPH	FT	FT	FT
1	3,4	12"	LED	N/A	N/A	N/A	50
2	5,6	12"	LED	N/A	N/A	N/A	50

NOTE
FIELD IS TO PROVIDE THE ACTUAL ALIGNMENT DISTANCE AS DETERMINED BY
SCP-706: ROAD CROSSING DEVICE LIGHT UNIT ALIGNMENT PROCEDURES

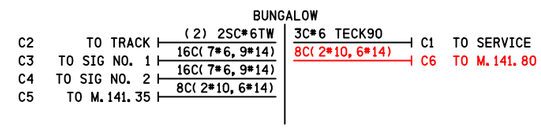

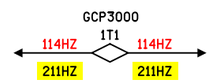

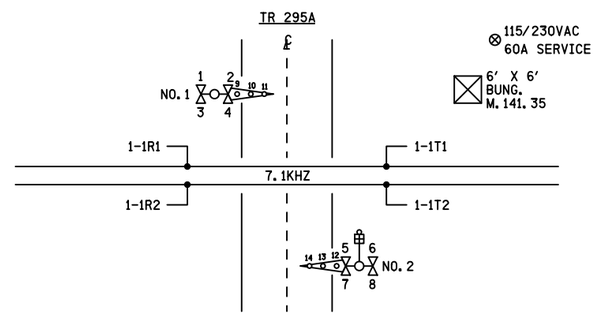

CONTENT	SHEET NO.
TRACK LAYOUT & INDEX	01
BUNGALOW LAYOUT SIDE "A" & "B"	02
BUNGALOW LAYOUT SIDE "C" & LINE CIRCUITS.	03
BUNGALOW LAYOUT SIDE "D" LOW IMPEDANCE GROUND PLANE	04
MICRO GCP 3000 1 TRACK (NO STANDBY)	05
GCP 3000 (MODULE #80214) PROGRAM DATA (LEVEL 9V121-A01M)	06
SSCC3+ CROSSING CONTROLLER 40AMP	07
TRACK LAYOUT & INDEX	08
GATE MECHANISM CONTROL CIRCUITS	09
SAFETRAN EVENT ANALYZER RECORDER II (SEAR II)	10
SEAR II PROGRAM DATA	11
POWER DISTRIBUTION	12
GCP 3000 (MODULE #80214) CALIBRATION HISTORY	13
DIGITAL CRTU WIRING	14

cha-141.35-01.dgn
31-AUG-2015

SIII 28 MAY 2015

TO BE CONFIRMED
CONFIRMED
DATE _____
BY _____
(PRINT NAME)

PROPOSED
DESIGN NO. 15-0151
RED-IN YELLOW-OUT

AS INSTALLED
DATE _____
BY _____
(PRINT NAME)

PROPOSED D	M	Y	REVISIONS	D	C	COMPLETED D	M	Y	C
			PLAN REDRAWN			28	05	15	NAD
28	05	15	ADAMS ST CWT UPGRADE	NAD	MRB				

REGION SOUTHERN
SUB. CHAMPAIGN 341
SIGNALS AND COMMUNICATIONS HOMEWOOD
DES. CSM
27 SEPTEMBER 2004
CH. PWW
TRACK LAYOUT & INDEX
PESOTUM, IL
TR 295A
CHA-141.35-01
DOT#289 101M
14

SIEMENS INDUSTRY INC

DES. : NAD	DATE: N/A	JOB NO.: PICA10588	
CKD. : MRB	ISSUE DATE: N/A	EST. NO. XP-7839	
DRN. : NAD	PLAN NO.: N/A	SHEET 1 OF 14	
P TIME: 15:13	P DATE: 31-AUG-2015	CAD ID.: CHA-141.35-01	

SIEMENS INDUSTRY INC
LOUISVILLE DIVISION, LOUISVILLE, KY

REVISIONS				
NO.	DATE	BY	DESCRIPTION	APP. BY
1				
2				
3				
4				
5				

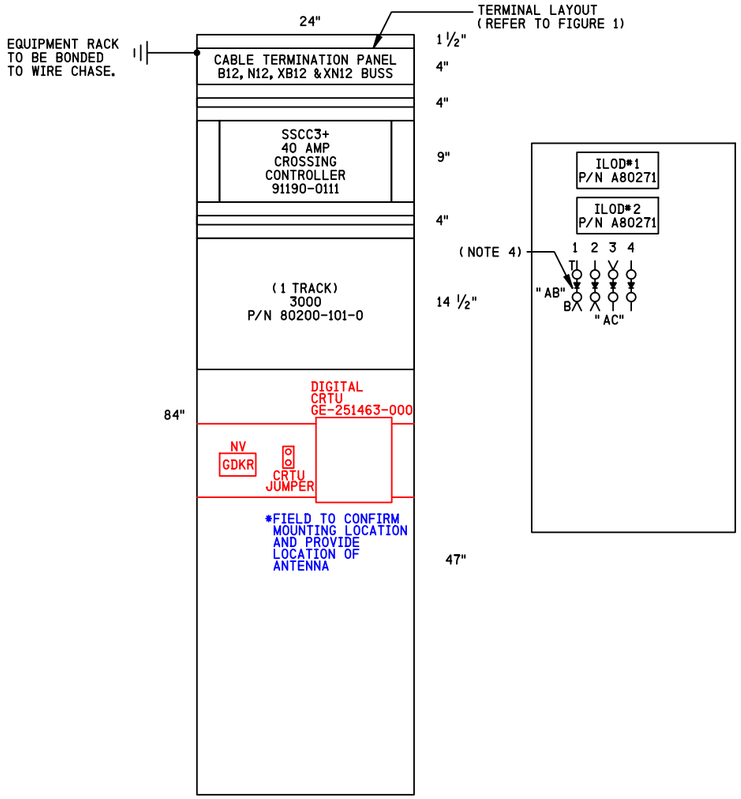

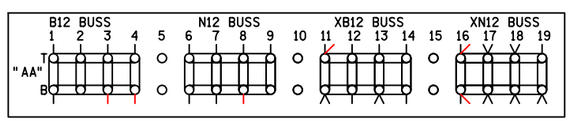

TERMINAL LAYOUT
FIGURE 1

SIDE "A"

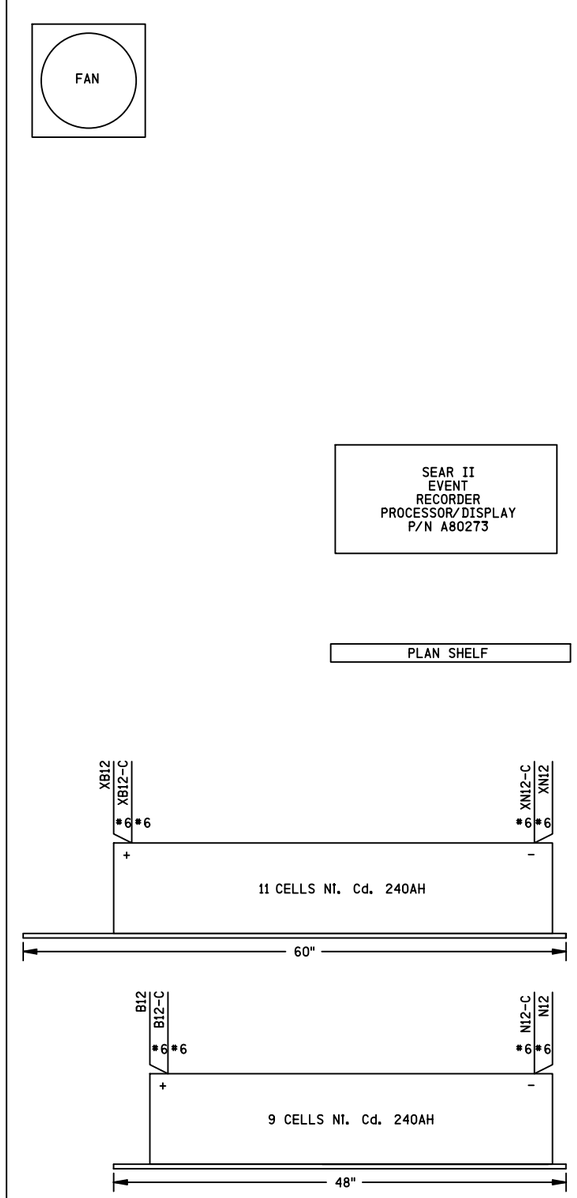

SIDE "B"

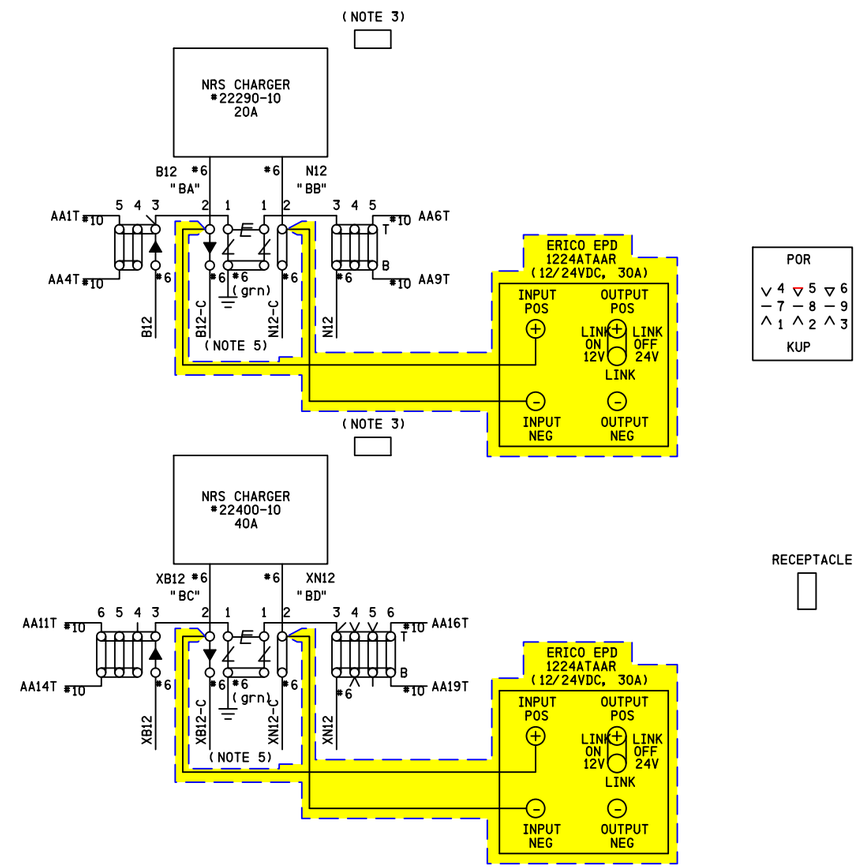

DENOTES PROPOSAL 15-0151
REVISION 28/05/15

SII 28 MAY 2015

PROPOSED
DESIGN NO. 15-0151
RED-IN YELLOW-OUT

AS INSTALLED
DATE _____
BY _____
(PRINT NAME)

NOTES
1) DENOTES EQUALIZER TYPE:(SAFETRAN #022700-1X)
2) DENOTES LIGHTNING ARRESTER TYPE:(SAFETRAN #022585-1X)
3)- ARMOURED CABLE JCT. BOX (PS-902 PG.4)
4) DENOTES RECTIFIER : (SAFETRAN #8008A299006)
5)- SURGE PROTECTION SHOULD BE BONDED TO BUNGALOW WITH ERICO PIGTAIL

PROPOSED
DESIGN NO. 10-0677
RED-IN YELLOW-OUT

AS INSTALLED
DATE _____
BY _____
(PRINT NAME)

PROPOSED D	PROPOSED M	PROPOSED Y	REVISIONS	D	C	COMPLETED D	COMPLETED M	COMPLETED Y	C
			PLAN REDRAWN			28	05	15	NAD
17	08	11	ADD CRTU	NST	NST				
28	05	15	ADAMS ST CWT UPGRADE	NAD	MRB				

REGION SOUTHERN
SUB. CHAMPAIGN 341
SIGNALS AND COMMUNICATIONS HOMEWOOD
27 SEPTEMBER 2004
DES. CSM
CH. PWW
BUNGALOW LAYOUT
SIDE "A" & "B"
PESOTUM, IL
TR 295A
CHA-141.35-02
DOT#289 101M

SIEMENS INDUSTRY INC
DES.: NAD | DATE: N/A | JOB NO.: PICA10588
CKD.: MRB | ISSUE DATE: N/A | EST. NO.: XP-7839
DRN.: NAD | PLAN NO.: N/A | SHEET 2 OF 14
P TIME: 15:13 | P DATE: 31-AUG-2015 | CAD ID.: CHA-141.35-02

SIEMENS INDUSTRY INC
LOUISVILLE DIVISION, LOUISVILLE, KY

cha-141.35-02.dgn
31-AUG-2015

REVISIONS				
NO.	DATE	BY	DESCRIPTION	APP. BY
1				
2				
3				
4				
5				

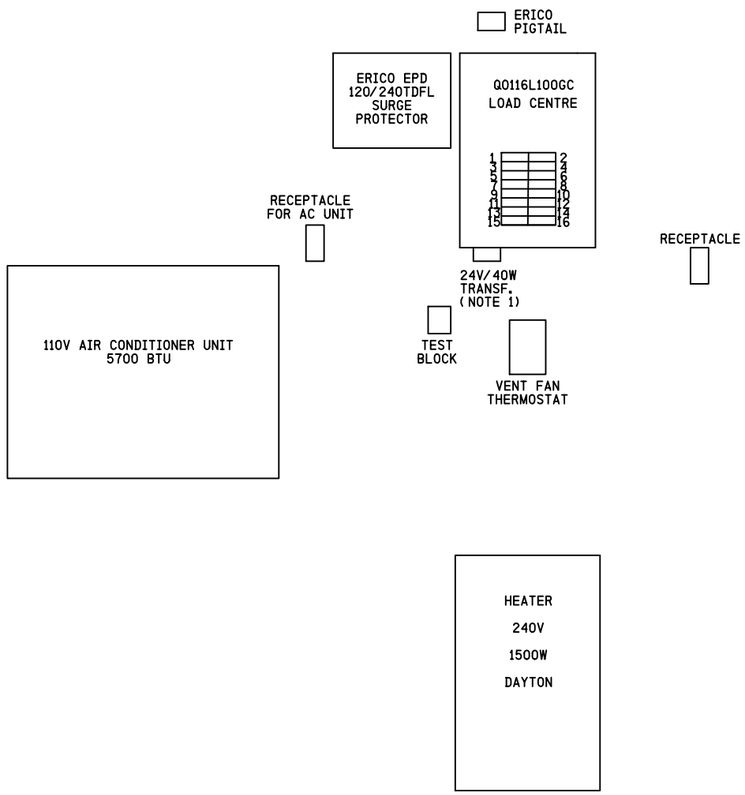

SIDE "C"

NOTE
1) 24V-40W TRANSFORMER (CN STOCK #02-45-367)

SIEMENS INDUSTRY INC		
DES.: NAD	DATE: N/A	JOB NO.: PICA10588
CKD.: MRB	ISSUE DATE: N/A	EST. NO.: XP-7839
DRN.: NAD	PLAN NO.: N/A	SHEET 3 OF 14
P TIME: 15:14	P DATE: 31-AUG-2015	CAD ID.: CHA-141.35-03

SIEMENS INDUSTRY INC
LOUISVILLE DIVISION, LOUISVILLE, KY

cha-141.35-03.dgn
31-AUG-2015

PROPOSED			REVISIONS	D	C	COMPLETED			C	
D	M	Y				D	M	Y		
			PLAN REDRAWN			28	05	15	NAD	

REGION SOUTHERN
SUB. CHAMPAIGN 341

SIGNALS AND COMMUNICATIONS HOMEWOOD
27 SEPTEMBER 2004
DES. CSM
CH. PWW

BUNGALOW LAYOUT
SIDE "C" & LINE CIRCUITS.
PESOTUM, IL
TR 295A

CHA-141.35-03

DOT#289 101M

REVISIONS				
NO.	DATE	BY	DESCRIPTION	APP. BY
1				
2				
3				
4				
5				

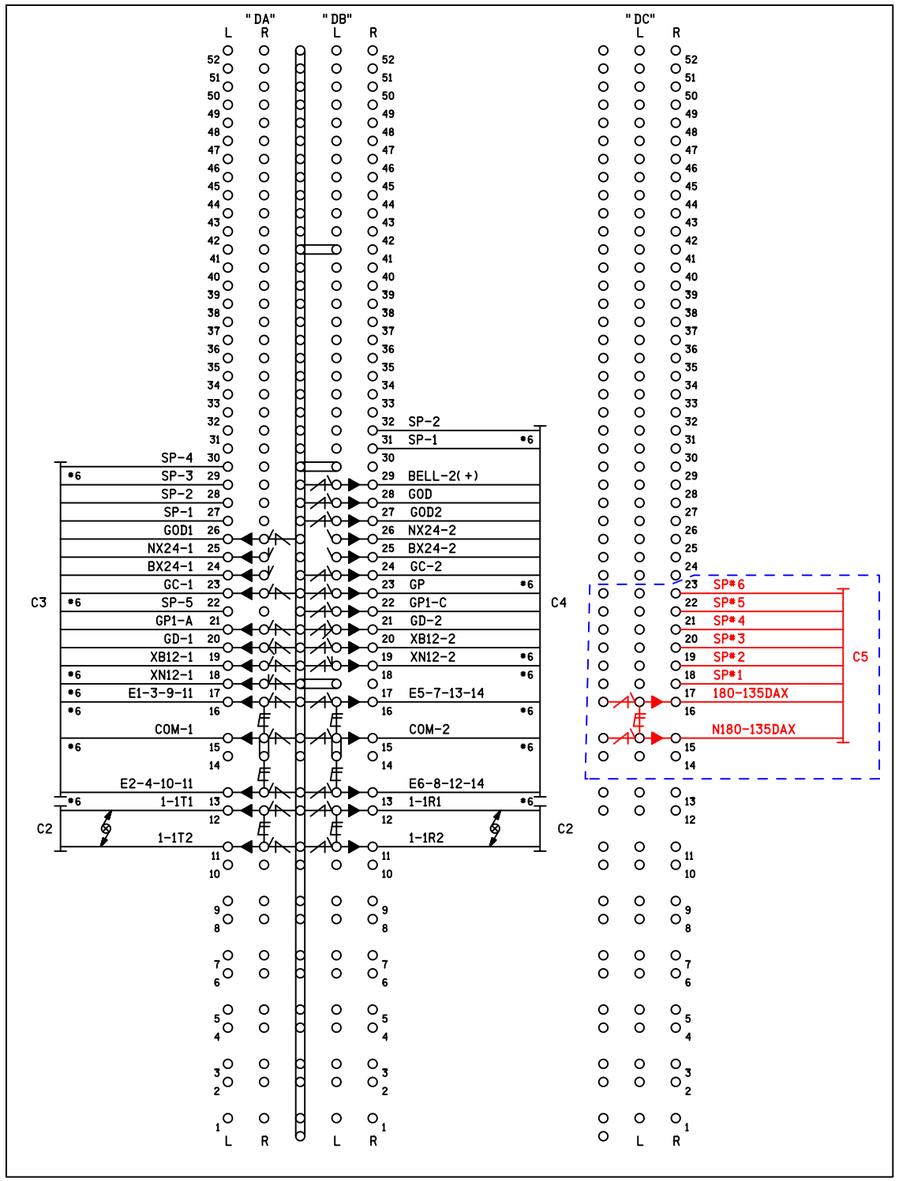

SIDE "D" (INSIDE)

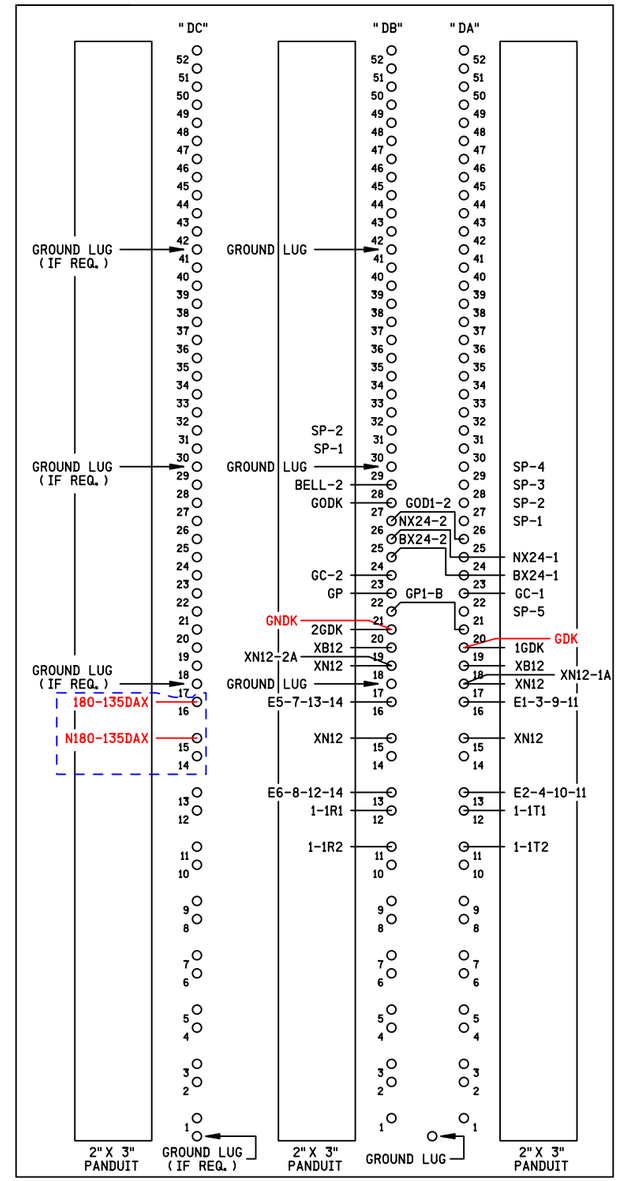

SIDE "D" (OUTSIDE)

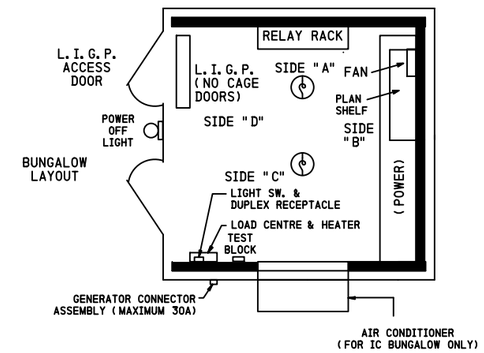

CABLE CONSIST

C1- 3C*6 TECK 90 U/G TO MAIN SERVICE (PROVIDED BY CUSTOMER)
C2- (2)-2SC*6 TW. TO TRACK
C3-16C (7*6,9*14) TO GATE (SIG.*1)
C4-16C (7*6,9*14) TO GATE (SIG.*2)
C5-8C (2*10,6*14) TO M.141.80

DENOTES PROPOSAL 15-0151
REVISION 28/05/15

SII 28 MAY 2015

PROPOSED
DESIGN NO. 15-0151
RED-IN YELLOW-OUT

AS INSTALLED
DATE
BY
(PRINT NAME)

NOTES

1) DENOTES LIGHTNING ARRESTER TYPE:(SAFETRAN *022585-1X)
2) DENOTES EQUALIZER TYPE:(SAFETRAN *022700-1X)
3) DENOTES TWISTED PAIRS
4) ENSURE DOUBLE NUTTING OF ALL TERMINALS

PROPOSED
DESIGN NO. 10-0677
RED-IN YELLOW-OUT

AS INSTALLED
DATE
BY
(PRINT NAME)

PROPOSED D	PROPOSED M	PROPOSED Y	REVISIONS	D	C	COMPLETED D	COMPLETED M	COMPLETED Y	C
			PLAN REDRAWN			28	05	15	NAD
17	08	11	ADD CRTU	NST	NST				
28	05	15	ADAMS ST CWT UPGRADE	NAD	MRB				

REGION SOUTHERN
SUB. CHAMPAIGN 341
SIGNALS AND COMMUNICATIONS HOMEWOOD
27 SEPTEMBER 2004
DES. CSM
CH. PWW
BUNGALOW LAYOUT SIDE "D"
LOW IMPEDANCE GROUND PLANE
PESOTUM, IL
TR 295A
CHA-141.35-04
DOT#289 101M

SIEMENS INDUSTRY INC			
DES.: NAD	DATE: N/A	JOB NO.: PICA10588	
CKD.: MRB	ISSUE DATE: N/A	EST. NO.: XP-7839	
DRN.: NAD	PLAN NO.: N/A	SHEET 4 OF 14	
P TIME: 15:14	P DATE: 31-AUG-2015	CAD ID.: CHA-141.35-04	

SIEMENS INDUSTRY INC
LOUISVILLE DIVISION, LOUISVILLE, KY

cha-141.35-04.dgn
31-AUG-2015

REVISIONS			
NO.	DATE	BY	DESCRIPTION	APP. BY
1				
2				
3				
4				
5				

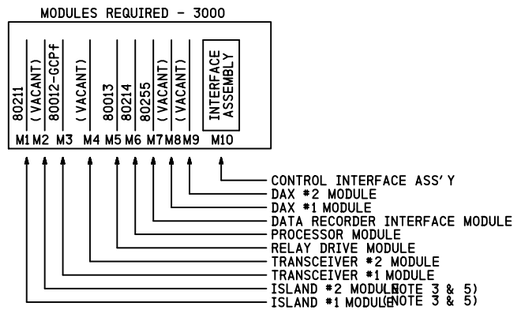

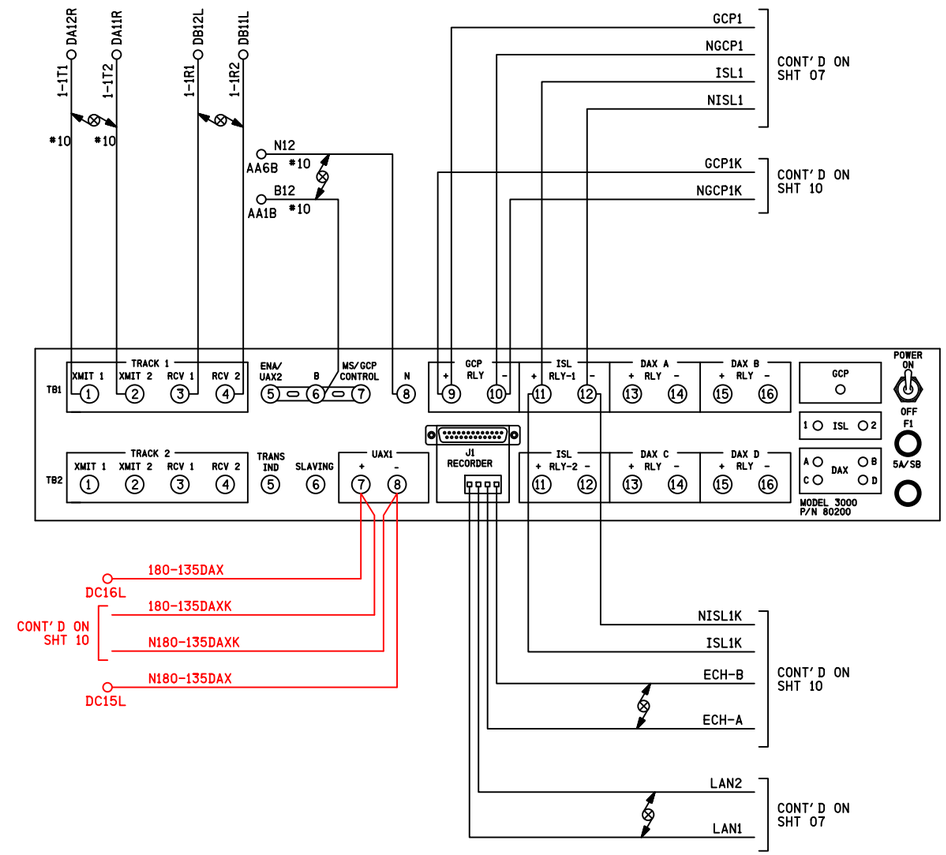

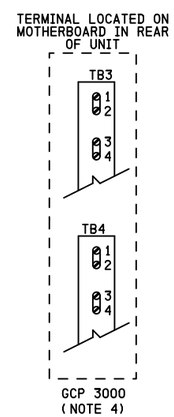

NOTES

1) ALL WIRING #16 AWG MINIMUM UNLESS OTHERWISE NOTED. WIRE SIZES SHOWN ARE MINIMUM GAUGE

2) DENOTES TWISTED PAIR

3) SELECT ISLAND OPERATING FREQUENCY OF MODULE #80211 BY PLACING THE SHORTING BLOCK ACROSS THE APPROPRIATE PAIR OF PINS ON THE FREQUENCY SELECTION 16 POSITIONS HEADER BLOCK.

4) ENSURE JUMPER LINKS CONNECTING TB3-1 AND 2, TB3-3 AND 4, TB4-1 AND 2 TB4-3 AND 4 ARE INSTALLED ON UNIT

5) IPI MODULE PROGRAMMABLE PICKUP DELAY IS FACTORY SET TO "0" SECONDS (SHORTING BLOCKS INSTALLED ACROSS PAIR OF PINS "A" AND "B" ON THE FREQUENCY SELECTION 16 POSITION HEADER BLOCK) SET PICKUP DELAY TIME TO "2" SECONDS BY REMOVING SHORTING BLOCK ACROSS PAIR OF PINS "B"

SII 28 MAY 2015

PROPOSED
DESIGN NO. 15-0151
RED-IN YELLOW-OUT

AS INSTALLED
DATE _____
BY _____
(PRINT NAME)

PROPOSED D	M	Y	REVISIONS	D	C	COMPLETED D	M	Y	C
			PLAN REDRAWN			28	05	15	NAD
28	05	15	ADAMS ST CWT UPGRADE	NAD	MRB				

REGION SOUTHERN
SUB. CHAMPAIGN 341

SIGNALS AND COMMUNICATIONS HOMEWOOD
27 SEPTEMBER 2004
DES. CSM
CH. PWW

MICRO GCP 3000
1 TRACK (NO STANDBY)
PESOTUM, IL
TR 295A

CHA-141.35-05

DOT#289 101M

SIEMENS INDUSTRY INC			
DES.: NAD	DATE: N/A	JOB NO.: PICA10588	
CKD.: MRB	ISSUE DATE: N/A	EST. NO.: XP-7839	
DRN.: NAD	PLAN NO.: N/A	SHEET 5 OF 14	
P TIME: 15:14	P DATE: 31-AUG-2015	CAD ID.: CHA-141.35-05	

SIEMENS INDUSTRY INC
LOUISVILLE DIVISION, LOUISVILLE, KY

cha-141.35-05.dgn
31-AUG-2015

REVISIONS				
NO.	DATE	BY	DESCRIPTION	APP. BY
1				
2				
3				
4				
5				

■ PRESS PROGRAM KEY

N	S			
☐	☐	NUMBER OF TRACKS (TRANSCEIVER MODULES)	1 ■	2 ☐
☐	☐	FREQUENCY (MS/GCP) T1:	211 114	Hz
		T2:	N/A	Hz
☐	☐	UNIDIRECTIONAL/BIDIRECTIONAL T1:	UNI ☐	BI ■
		T2:	UNI ☐	BI ☐
☐	☐	XMIT LEVEL T1:	MAX ■	MED ☐
		T2:	MAX ☐	MED ☐
☐	☐	PREDICTOR/MOTION SENSOR T1:	PRED ■	MS ☐
		T2:	PRED ☐	MS ☐
☐	☐	WARNING TIME SELECTED T1:	30	SEC.
		T2:	N/A	SEC.
☐	☐	APPROACH DISTANCE SELECTED (NOTES 2, 4 & 6) T1:	4000 4070	FT.
		T2:	N/A	FT.
		APPROACH DISTANCE COMPUTED (NOTES 1, 4, 6 & 9) T1:	(NORMAL)	(STANDBY) FT.
		T2:	N/A (NORMAL)	(STANDBY) FT.
☐	☐	UAX PICKUP DELAY (UAX 1) (0 = OFF)	0 22	SEC.
☐	☐	ENA / UAX2 DELAY (0 = ENA)	0	SEC.
☐	☐	ISLAND DISTANCE (BETWEEN ISLAND TRACK WIRE CONNECTIONS) (NOTES 2, 4 & 6) T1:	120	FT.
		T2:	0	FT.
☐	☐	NUMBER OF DAXS	0 ■ 1 ☐ 2 ☐ 3 ☐ 4 ☐	
☐	☐	DAX A TRACK ASSIGNMENT	T1 ☐	T2 ☐
☐	☐	DAX A DISTANCE (0 = PREEMPT) (NOTES 2, 4 & 6)	N/A	FT.
☐	☐	DAX A WARNING TIME	N/A	SEC.

■ PRESS PROGRAM KEY

N	S			
☐	☐	DAX B TRACK ASSIGNMENT	T1 ☐	T2 ☐
☐	☐	DAX B DISTANCE (0 = PREEMPT) (NOTES 2, 4 & 6)	N/A	FT.
☐	☐	DAX B WARNING TIME	N/A	SEC.
☐	☐	DAX C TRACK ASSIGNMENT	T1 ☐	T2 ☐
☐	☐	DAX C DISTANCE (0 = PREEMPT) (NOTES 2, 4 & 6)	N/A	FT.
☐	☐	DAX C WARNING TIME	N/A	SEC.
☐	☐	DAX D TRACK ASSIGNMENT	T1 ☐	T2 ☐
☐	☐	DAX D DISTANCE (0 = PREEMPT) (NOTES 2, 4 & 6)	N/A	FT.
☐	☐	DAX D WARNING TIME	N/A	SEC.
☐	☐	SLAVING MASTER/SLAVE	MASTER ■	SLAVE ☐
☐	☐	PASSWORD ENABLED	DISABLED ☐ ENABLED ■	
☐	☐	RECORDER INSTALLED (NOTE 11)	NOT INSTALLED ☐ INSTALLED ■	
		EXTERNAL NODE # (NOTE 11)	2 (NORMAL)	N/A (STANDBY)
☐	☐	RS-232-C BAUD RATE	9600	BPS
☐	☐	RS-232-C DATA BITS	7 ☐	8 ■
☐	☐	RS-232-C STOP BITS	1 ■	2 ☐
☐	☐	RS-232-C PARITY	NONE ■ ODD ☐ EVEN ☐	MARK ☐ SPACE ☐
☐	☐	DATE (E.G., MON 16 NOV 1987) (NOTE 2)		
☐	☐	TIME (E.G., 11:25:43 AM) (NOTE 2)		
☐	☐	DAYLIGHT SAVINGS	ON ■	OFF ☐

■ PRESS FUNCTION KEY

N	S			
☐	☐	SWITCH TO MS (ENTER EZ VALUE) (NOTES 2, 4 & 5) T1:	10	EZ
		T2:	N/A	EZ
☐	☐	TRANSFER DELAY MS TO GCP (0 = OFF) T1:	0	SEC.
		T2:	N/A	SEC.
☐	☐	TRANSFER MS TO GCP PRIME (WHEN PRIME PREDICTION OFFSET IS ON) T1:	ON ☐	OFF ■
		T2:	ON ☐	OFF ■
☐	☐	TRANSFER MS TO GCP DAX A T1:	ON ☐	OFF ■
		T2:	ON ☐	OFF ■
☐	☐	TRANSFER MS TO GCP DAX B T1:	ON ☐	OFF ■
		T2:	ON ☐	OFF ■
☐	☐	TRANSFER MS TO GCP DAX C T1:	ON ☐	OFF ■
		T2:	ON ☐	OFF ■
☐	☐	TRANSFER MS TO GCP DAX D T1:	ON ☐	OFF ■
		T2:	ON ☐	OFF ■
☐	☐	PRIME PREDICTION OFFSET (0 = OFF) (NOTES 2, 4 & 6) T1:	0	FT.
		T2:	0	FT.
☐	☐	PICKUP DELAY PRIME	AUTOMATIC ☐	FIXED ■ 30 SEC.
☐	☐	PICKUP DELAY DAX A	AUTOMATIC ☐	FIXED ☐ N/A SEC.
☐	☐	PICKUP DELAY DAX B	AUTOMATIC ☐	FIXED ☐ N/A SEC.
☐	☐	PICKUP DELAY DAX C	AUTOMATIC ☐	FIXED ☐ N/A SEC.
☐	☐	PICKUP DELAY DAX D	AUTOMATIC ☐	FIXED ☐ N/A SEC.
☐	☐	COMPENSATION VALUE (NOTES 3 & 4) T1:	1300 (NORMAL)	(STANDBY)
☐	☐	COMPENSATION VALUE (NOTES 3 & 4) T2:	N/A (NORMAL)	(STANDBY)

EXPANDED PROGRAMMING

■ PRESS FUNCTION KEY

N	S			
☐	☐	ENHANCED DETECTION (ED) (NOTES 6 & 9) T1:	ON ■	OFF ☐
		T2:	ON ☐	OFF ☐
☐	☐	BACK TO BACK T1 & T2 (WHEN ED DETECTION IS ON)	NO ■	YES ☐
☐	☐	STATION STOP TIMER (WHEN ENHANCED DETECTION IS ON) T1:	10	SEC.
		T2:	0	SEC.
☐	☐	NUMBER OF TRACK WIRES T1:	4 ■	6 ☐
		T2:	4 ☐	6 ☐
☐	☐	LOW EX ADJUSTMENT (NOTES 2, 4, 6 & 7) T1:	0	
		T2:	0	
☐	☐	LOW EZ DETECTION (WHEN EZ=70) T1:	ON ☐	OFF ■
		T2:	ON ☐	OFF ☐
☐	☐	LOW EZ DETECTION TIMER (WHEN LOW EZ DETECTION IS ON) (NOTE 12) T1:	N/A	MIN.
		T2:	N/A	MIN.
☐	☐	POSITIVE START (0 = OFF) (NOTES 2, 4, 6 & 10) T1:	0	EZ
		T2:	0	EZ
☐	☐	POSITIVE START TIMEOUT (0 = NONE) (WHEN POSITIVE START IS ON) T1:	0	MIN.
		T2:	0	MIN.
☐	☐	SET "AT" OPERATION	NORMAL ■	DIAGNOSTIC ☐
☐	☐	DIAGNOSTIC MESSAGES	ON ■	OFF ☐
☐	☐	DAX MESSAGES	ON ■	OFF ☐
☐	☐	ADVANCE PREEMPT TIMER (0 = OFF)	0	SEC.
☐	☐	MOTION SENSING LEVEL (0 = NORMAL) (NOTES 2, 4 & 6) T1:	0	%
		T2:	0	%

EXPANDED PROGRAMMING

1) COMPUTED BY SYSTEM DURING CALIBRATION

2) PROGRAMMED AT INSTALLATION DURING CALIBRATION PROCEDURE

3) THE COMPENSATION VALUE IS PROVIDED BY THE 3000 GCP SYSTEM AND NO ADDITIONAL PROGRAMMING IS NORMALLY REQUIRED. DO NOT CHANGE VALUE WITHOUT PROPER INSTRUCTION

4) INDICATE READING OR SELECTION IN SPACE PROVIDED

5) EACH CONSTANT WARNING DEVICE SYSTEM TO BE PROGRAMMED TO CONVERT TO A MOTION SENSOR 300 FEET FROM EDGE OF ROAD TRAVELLED WAY.
SHUNT TRACK 300 FEET FROM EDGE OF ROAD TRAVELLED WAY AND NOTE "EZ" VALUE.
PROGRAM EACH SYSTEM WITH THE INDICATED "EZ" VALUE +2.

6) REFER TO MODEL 3000 GCP INSTRUCTION AND INSTALLATION MANUAL FOR PROGRAMMING PARAMETERS.

7) "LOW EX" THRESHOLD IS FACTORY PRESET AND NO ADDITIONAL PROGRAMMING IS NORMALLY REQUIRED.
IMPROPER REDUCTION OF THE "LOW EX" THRESHOLD MAY CAUSE REDUCTION IN WARNING TIME.
DO NOT CHANGE VALUE WITHOUT PROPER INSTRUCTION.

8) T1-ISLAND FREQUENCY TO BE PROGRAMMED AT 7.1 KHz
T2-ISLAND FREQUENCY TO BE PROGRAMMED AT N/A KHz

9) SET UP APPROACH LENGTH AND LINEARIZATION CALIBRATION
VERIFY THAT "ENHANCED DETECTION" MODE IS PROGRAMMED "OFF" BEFORE ATTEMPTING LINEARIZATION PROCEDURES.

10) EACH CONSTANT WARNING DEVICE SYSTEM TO BE PROGRAMMED USING POSITIVE START FUNCTION.
SHUNT TRACK 300 FEET FROM EDGE OF ROAD TRAVELLED WAY AND NOTE "EZ" VALUE.
PROGRAM THE SYSTEM WITH THE INDICATED "EZ" VALUE.

11) GCP/MS NODES MUST BE INSTALLED ON THE SEA/R BEFORE RECORDER MODULE 80255 CAN BE INSTALLED.

12) SET VALUE TO MATCH ACTUAL TRAIN MOVEMENT WITHIN THE CROSSING APPROACH CIRCUITS.

13) N ☐ DENOTES NORMAL GCP UNIT
S ☐ DENOTES STANDBY GCP UNIT

CALIBRATION HISTORY

80012 DC VOLTAGE READINGS AFTER CALIBRATION		CALIBRATION HISTORY				LINEARIZATION HISTORY (NOTE 9)													
		EZ/EX VALUES (TRACK UNOCCUPIED)				HARDWIRE SHUNT AT TERMINATION SHUNT						HARD WIRE SHUNT AT 50 PERCENT POINT OF SHUNT							
T1	T2	EZ		EX		EZ VALUE		EX VALUE		50 PERCENT OF EZ VALUE		NO LINEARIZATION				LINEARIZATION COMPLETE			
												EZ VALUE		EX VALUE		STEP±		EZ	
Z1=	Z1=																		
Z2=	Z2=	NORMAL	STANDBY	NORMAL	STANDBY	NORMAL	STANDBY	NORMAL	STANDBY	NORMAL	STANDBY	NORMAL	STANDBY	NORMAL	STANDBY	NORMAL	STANDBY	NORMAL	STANDBY
EAST	TRACK 1																		
WEST	TRACK 1																		
EAST	TRACK 2																		
WEST	TRACK 2																		

	DEFAULT	RECOMMENDED	T1	T2	
ED SENSITIVITY LEVEL	1003	1004			TO VARY ED SENSITIVTY WITH ED ON, KEY-IN "NEW DATA", THEN 1003, 1004, 1005, OR 10025 THE LOWER THE NUMBER, THE HIGHER THE SENSITIVITY.
SPEED LIMITING	4000 (ON)	4000 (ON)			SPEED LIMITING IS INDEPENDENT OF ED AND A "*" IS SHOWN WHEN IT IS ON. TO TURN ON OR OFF, KEY-IN "NEW DATA", THEN 4000 FOR ON OR 4001 FOR OFF.
PREDICTION COUNTS	3000 (ON)	3000 (ON)			TO INCREASE PREDICITION COUNTS WITH ED ON, KEY-IN "NEW DATA", THEN 3001, 3002, OR 3003. 3001=A DELAY OF 0.5 SEC (DISPLAYED AS ON+1) 3002=A DELAY OF 1.0 SEC (DISPLAYED AS ON+2) 3003=A DELAY OF 1.5 SEC (DISPLAYED AS ON+3)

	MAIN	STANDBY
TRACK 1 TCN		
TRACK 2 TCN		
CONFIGURATION CCN		

SII 28 MAY 2015

PROPOSED
DESIGN NO. 15-0151
RED-IN YELLOW-OUT

AS INSTALLED
DATE
BY
(PRINT NAME)

PROPOSED D	M	Y	REVISIONS	D	C	COMPLETED D	M	Y	C
			PLAN REDRAWN			28	05	15	NAD
28	05	15	ADAMS ST CWT UPGRADE	NAD	MRB				

REGION SOUTHERN
SUB. CHAMPAIGN 341

SIGNALS AND COMMUNICATIONS HOMEWOOD
27 SEPTEMBER 2004
DES. CSM
CH. PWW

GCP 3000 (MODULE #80214)
PROGRAM DATA (LEVEL 9V121-A01M)
PESOTUM, IL
TR 295A

CHA-141.35-06
DOT#289 101M

SIEMENS INDUSTRY INC
DES.: NAD | DATE: N/A | JOB NO.: PICA10588
CKD.: MRB | ISSUE DATE: N/A | EST. NO.: XP-7839
DRN.: NAD | PLAN NO.: N/A | SHEET 6 OF 14
P. TIME: 15:14 | P. DATE: 31-AUG-2015 | CAD ID.: CHA-141.35-06

SIEMENS INDUSTRY INC
LOUISVILLE DIVISION, LOUISVILLE, KY

cha-141.35-06.dgn
31-AUG-2015

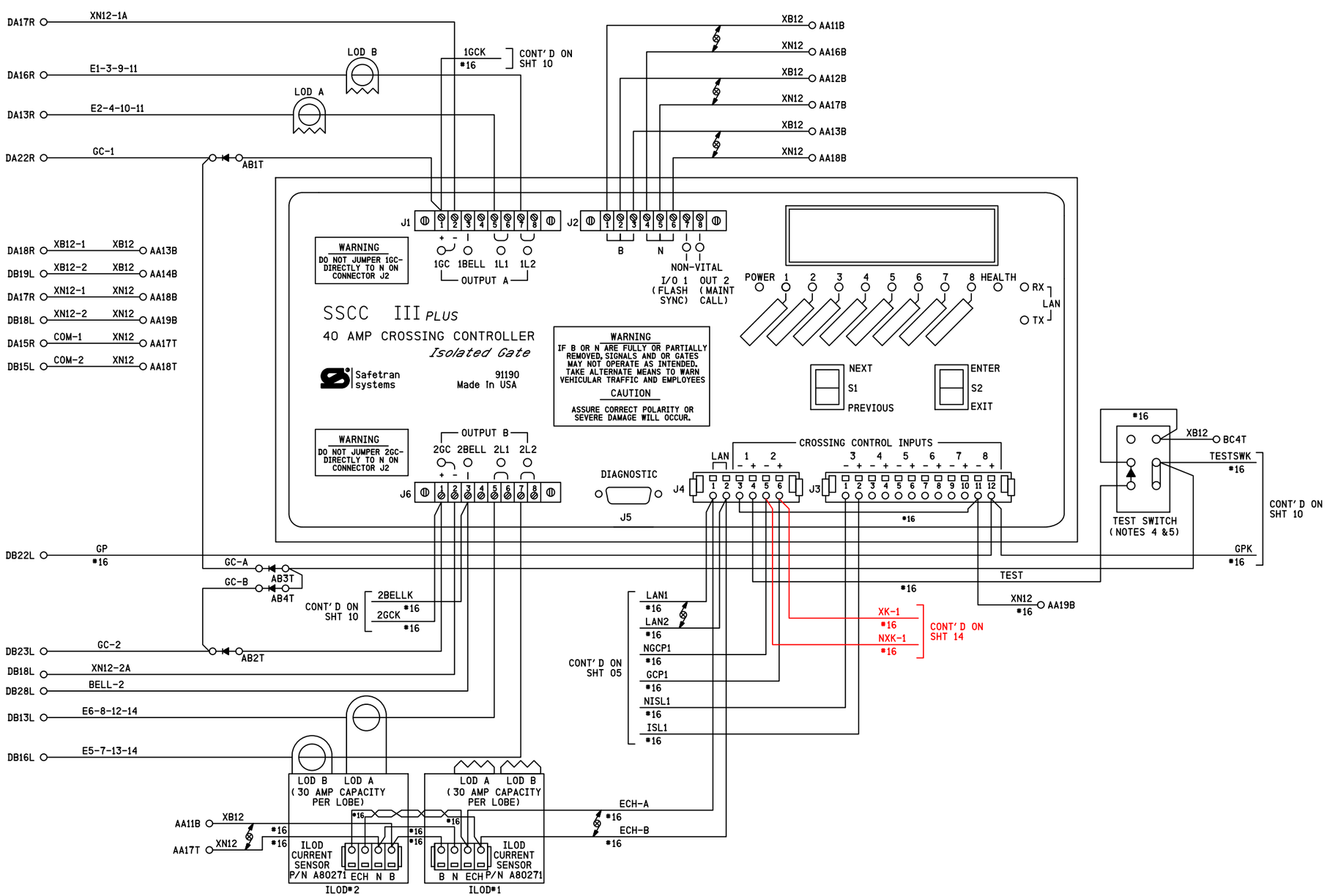

NOTES

1) DENOTES RECTIFIER : (SAFETRAN #8008A299006)

2) DENOTES TWISTED PAIRS

3) ALL WIRING TO BE #10 AWG MINIMUM UNLESS OTHERWISE NOTED.

4) MULTI-UNIT TERMINAL BLOCK

5) IF LINK IS CONNECTED BETWEEN XB12 AND TESTSWK TERMINAL GATES WILL REMAIN IN UP POSTION

PROPOSED
DESIGN NO. 10-0677
RED-IN YELLOW-OUT

AS INSTALLED
DATE
BY
(PRINT NAME)

PROPOSED D	M	Y	REVISIONS	D	C	COMPLETED D	M	Y	C
			PLAN REDRAWN			28	05	15	NAD
17	08	11	ADD CRTU	NST	NST				

REGION SOUTHERN
SUB. CHAMPAIGN 341

SIGNALS AND COMMUNICATIONS HOMEWOOD
27 SEPTEMBER 2004
DES. CSM
CH. PWW

SSCC3+ CROSSING CONTROLLER 40AMP

PESOTUM, IL
TR 295A

CHA-141.35-07
DOT#289 101M

SIEMENS INDUSTRY INC
LOUISVILLE DIVISION, LOUISVILLE, KY

SIEMENS INDUSTRY INC
DES.: NAD | DATE: N/A | JOB NO.: PICA10588
CKD.: MRB | ISSUE DATE: N/A | EST. NO.: XP-7839
DRN.: NAD | PLAN NO.: N/A | SHEET 7 OF 14
P. TIME: 15:14 | P. DATE: 31-AUG-2015 | CAD ID.: CHA-141.35-07

NO.	DATE	BY	DESCRIPTION	APP. BY
1				
2				
3				
4				
5				

REVISIONS

cha-141.35-07.dgn
31-AUG-2015

REVISIONS				
NO.	DATE	BY	DESCRIPTION	APP. BY
1				
2				
3				
4				
5				

CROSSING CONTROLLER SSCCIII 40-AMPERE UNIT, 91190

PROGRAM	NOTES	INITIAL SETTING BY: _____ DATE: _____
FLASH RATE:	30-70 FLASHES/MINUTE DEFAULT = 50	55 FLASHES/MINUTE
GATES USED:	YES/NO DEFAULT = YES	■ YES ☐ NO
1 GC DELAY:	3-20 SEC., DEFAULT = 4	3 SECONDS
2 GC DELAY (40 AMP UNIT):	3-20 SEC., DEFAULT = 4	3 SECONDS
GATE RISING BELL:	ON/OFF, DEFAULT = ON	☐ ON ■ OFF
ENABLED INPUTS:	1 THRU 7 ONLY	■ 1 ■ 2 ■ 3 ☐ 4 ☐ 5 ☐ 6 ☐ 7
GC2/I7:	GC2 NORMAL, I7 = NORMAL GC2 INVERTED, I7 = NORMAL GC2 PRMT RELAY, I7 = FDBK	■ NORMAL ☐ INVERTED ☐ PRE-EMPT SIM ☐ PRE-EMPT ADV
ADV PRE-EMPT TIME (40A):	1-30 SEC., DEFAULT = 1	N/A SECONDS
MIN ACTIVATION TIME:	0-30 SEC., DEFAULT = 20	20 SECONDS
STICK RELEASE TIME:	5-30 MIN., DEFAULT = 15	N/A MINUTES
SUP ISLAND TIME:	5-20 MIN., DEFAULT = 20	N/A MINUTES
ENABLED OUTPUTS: (40 amp only)	DEFAULT = A + B	■ A + B ☐ A ☐ B
DAYLIGHT SAVINGS:	DEFAULT = DISABLED	■ ENABLED ☐ DISABLED
DATE:	N/A	☐ DATE SET
TIME:	24-FORMAT	☐ TIME SET
PASSWORD:	DEFAULT = DISABLED	☐ ENABLED ■ DISABLED
CONFIGURE		
LOS TIMERS:	0-20 SECONDS, INPUTS 1-7 ONLY DEFAULT = 0	1: 0 SEC 5: 0 SEC 2: 0 SEC 6: 0 SEC 3: 0 SEC 7: 0 SEC 4: 0 SEC
MCF:		MCF: BASICPLS CRC: 72ADEE59
ATCS ADDRESS:	DEFAULT = 700000000000	
LOW BATTERY:	9.0-15.0 VOLTS, OR DISABLED DEFAULT = DISABLED	■ DISABLED ☐ ENABLED _____ VOLTS
AUX I/O:	DEFAULT = NONVITAL OUTPUT	■ NV OUTPUT ☐ FLASH SYNC IN ☐ FLASH SYNC OUT
TEST CONFIGURE		
LAMP TEST CANCEL TIMER:	1-15 MINUTES, DEFAULT = 5	5 MINUTES
LAMP TEST DELAY TIMER:	30-120 SEC., DEFAULT = 30	30 SEC.
LAMP TEST ON TIMER:	15-60 SEC., DEFAULT = 15	15 SEC.

STANDARD SETUP LAMP VOLTAGES PROCEDURE
USING TRUE RMS AC+DC METER, OR CONVERSION TABLE BELOW

SETUP LAMP VOLTAGES	INITIAL SETTINGS BY: _____ DATE: _____ METER: _____
FAR GATE	1 L1 = _____ VOLTS 1 L2 = _____ VOLTS 2 L1 = _____ VOLTS 2 L2 = _____ VOLTS
SSCCIII+	1 L1 = _____ VOLTS 1 L2 = _____ VOLTS 2 L1 = _____ VOLTS 2 L2 = _____ VOLTS
NEAR GATE	1 L1 = _____ VOLTS 1 L2 = _____ VOLTS 2 L1 = _____ VOLTS 2 L2 = _____ VOLTS

MULTIMETER READING VARIANCE FROM ACTUAL LAMP VOLTAGE

BATTERY BANK VOLTAGE	VALID LAMP OUTPUT RANGE (In volts)	DIGITAL METER (FLUKE 87 OR EQUIVALENT)	ANALOG METER (SIMPSON 260 OR TS111)
13.3	9.0 TO 12.0	1.3 VOLTS BELOW ACTUAL VALUE	0.6 VOLTS BELOW ACTUAL VALUE
14.7	9.0 TO 12.0	2.2 VOLTS BELOW ACTUAL VALUE	1.1 VOLTS BELOW ACTUAL VALUE
15.8	9.0 TO 12.0	2.6 VOLTS BELOW ACTUAL VALUE	2.0 VOLTS BELOW ACTUAL VALUE

FOR LAMP OUTPUT SETTINGS GREATER THAN 12.0 VOLTS, REDUCE THE LISTED VALUES BY 30%
LAMP VOLTAGE MEASUREMENTS SHOULD BE ACCURATE TO 0.3 VOLTS.

SOFTWARE VERSION: 9V546-A01.J

SIEMENS INDUSTRY INC			
DES.: NAD	DATE: N/A	JOB NO.: PICA10588	
CKD.: MRB	ISSUE DATE: N/A	EST. NO.: XP-7839	
DRN.: NAD	PLAN NO.: N/A	SHEET 8 OF 14	
P. TIME: 15:14	P. DATE: 31-AUG-2015	CAD ID.: CHA-141.35-08	

PROPOSED D	M	Y	REVISIONS	D	C	COMPLETED D	M	Y	C
			PLAN REDRAWN			28	05	15	NAD

REGION SOUTHERN
SUB. CHAMPAIGN 341

SIGNALS AND COMMUNICATIONS HOMEWOOD — DES. CSM
27 SEPTEMBER 2004 — CH. PWW

TRACK LAYOUT
& INDEX
PESOTUM, IL
TR 295A

CHA-141.35-08
DOT#289 101M

SIEMENS INDUSTRY INC
LOUISVILLE DIVISION, LOUISVILLE, KY

cha-141.35-08.dgn
31-AUG-2015

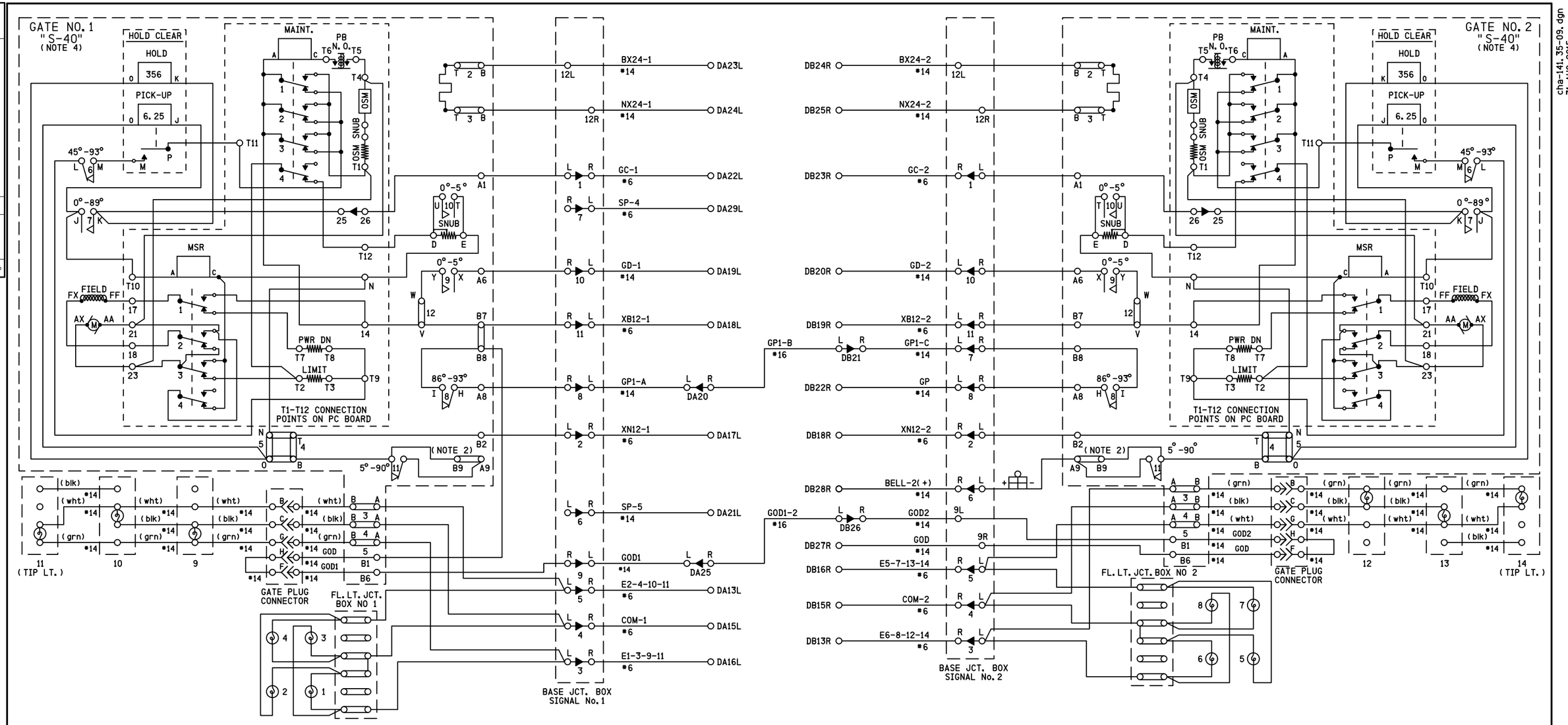

cha-141.35-09.dgn
31-AUG-2015

NOTES

1) GATE No. 1 ADD STRAP BETWEEN B7 AND B8

2) BELL CUT-OUT (5°-90°) WHEN REQUIRED REMOVE STRAP BETWEEN A9 AND B9

3) ALL WIRING #10 AWG MINIMUM UNLESS OTHERWISE NOTED. WIRE SIZES SHOWN ARE MINIMUM GAUGE

4) GATE DESCENT TIME (RELEASE FROM VERTICAL TO FULLY HORIZONTAL) TO BE WITHIN 11 SECONDS

5) ENSURE ALL TERMINALS HAVE TWO SHOULDER NUTS

REVISIONS				
NO.	DATE	BY	DESCRIPTION	APP. BY
1				
2				
3				
4				
5				

SIEMENS INDUSTRY INC			
DES.: NAD	DATE: N/A	JOB NO.: PICA10588	
CKD.: MRB	ISSUE DATE: N/A	EST. NO.: XP-7839	
DRN.: NAD	PLAN NO.: N/A	SHEET 9 OF 14	
P TIME: 15:14	P DATE: 31-AUG-2015	CAD ID.: CHA-141.35-09	

PROPOSED D	M	Y	REVISIONS	D	C	COMPLETED D	M	Y	C
			PLAN REDRAWN			28	05	15	NAD

REGION SOUTHERN
SUB. CHAMPAIGN 341

SIGNALS AND COMMUNICATIONS HOMEWOOD
27 SEPTEMBER 2004
DES. CSM
CH. PWW

GATE MECHANISM CONTROL CIRCUITS

PESOTUM, IL
TR 295A

CHA-141.35-09

DOT#289 101M

SIEMENS INDUSTRY INC
LOUISVILLE DIVISION, LOUISVILLE, KY

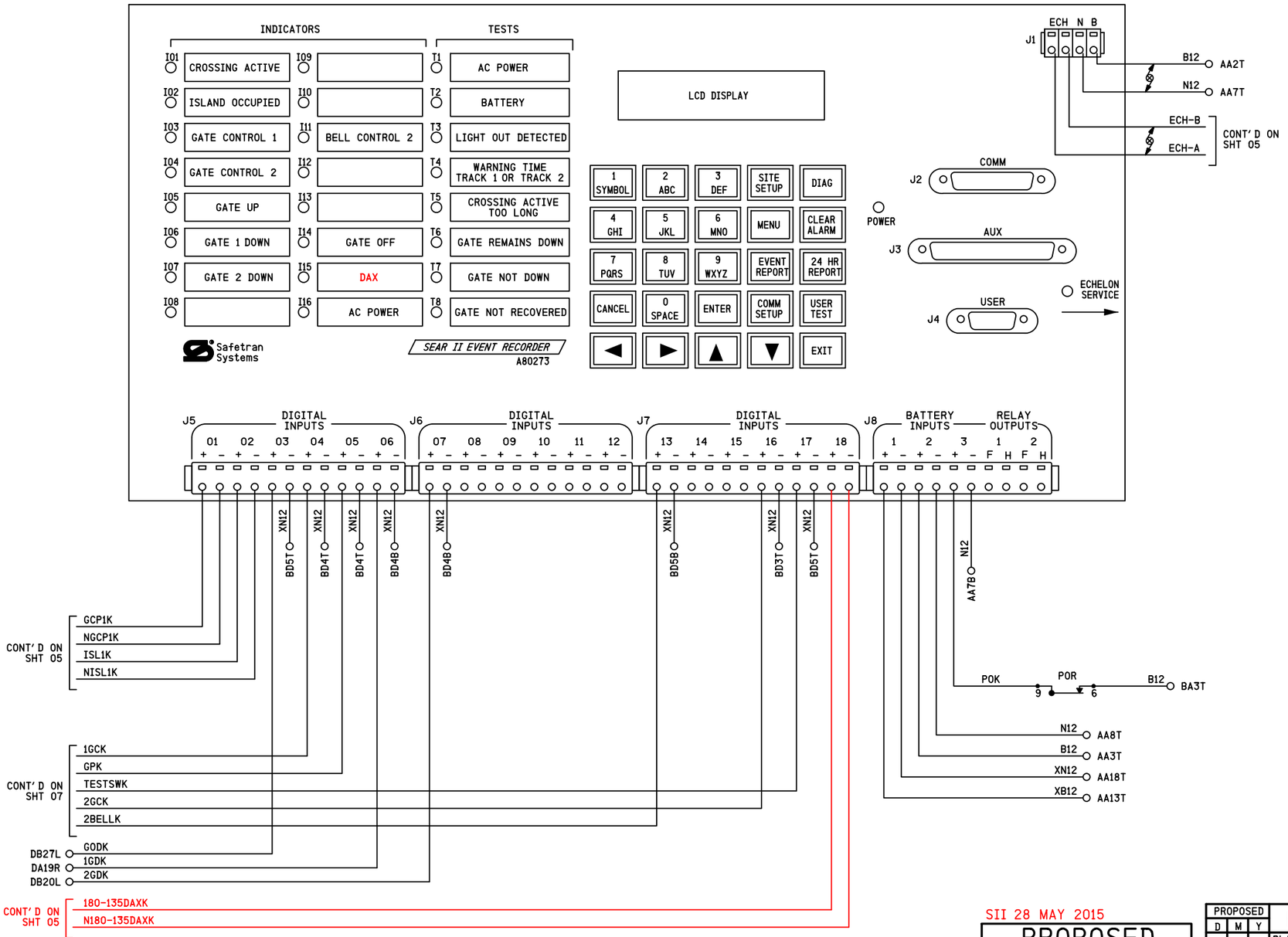

NOTES

1) ALL WIRING #16 AWG UNLESS OTHERWISE NOTED

2) DENOTES TWISTED PAIRS

SII 28 MAY 2015

PROPOSED
DESIGN NO. 15-0151
RED-IN YELLOW-OUT

AS INSTALLED
DATE _____
BY _____
(PRINT NAME)

PROPOSED D	M	Y	REVISIONS	D	C	COMPLETED D	M	Y	C
			PLAN REDRAWN			28	05	15	NAD
28	05	15	ADAMS ST CWT UPGRADE	NAD	MRB				

REGION SOUTHERN
SUB. CHAMPAIGN 341
CN

SIGNALS AND COMMUNICATIONS HOMEWOOD
27 SEPTEMBER 2004
DES. CSM
CH. PWW

SAFETRAN EVENT ANALYZER RECORDER II (SEAR II)
PESOTUM, IL
TR 295A

CHA-141.35-10

DOT#289 101M

REVISIONS NO.	DATE	BY	DESCRIPTION	APP. BY
1				
2				
3				
4				
5				

SIEMENS INDUSTRY INC

DES.: NAD	DATE: N/A	JOB NO.: PICA10588	
CKD.: MRB	ISSUE DATE: N/A	EST. NO.: XP-7839	
DRN.: NAD	PLAN NO.: N/A	SHEET 10 OF 14	
P. TIME: 15:14	P. DATE: 31-AUG-2015	CAD ID.: CHA-141.35-10	

SIEMENS INDUSTRY INC
LOUISVILLE DIVISION, LOUISVILLE, KY

cha-141.35-10.dgn
31-AUG-2015

MENU ITEMS

RESET NAMES/MODULES	NO	
AC OFF ALARM TIME (minutes)	60	MIN.
MINIMUM WARNING TIME (seconds)	20	SEC.
DESIRED WARNING TIME (seconds)	25 30	SEC.
IGNORE WARNING TIMES BELOW (seconds)	3	SEC.
HOW MANY GATES?	2	
GATE 1 DOWN	☐ NOT ENERGIZED ■ ENERGIZED	
GATE 2 DOWN	☐ NOT ENERGIZED ■ ENERGIZED	
GATE 3 DOWN	■ NOT ENERGIZED ☐ ENERGIZED	
GATE 4 DOWN	■ NOT ENERGIZED ☐ ENERGIZED	
HOW MANY SETS OF GCPS?	1	
IF 1 SET IS SELECTED DOES GCP HAVE STANDBY?	YES	
IF 2 SETS ARE SELECTED DOES 2ND GCP HAVE STANDBY?	N/A	
HOW MANY ILODS?	2	
IF 1 OR MORE IS SELECTED MINIMUM FLASH RATE	50	
MINIMUM NORMAL VOLTAGE	10.5	VOLTS
GATE NOT DOWN ALARM TIME	15	SEC.
CROSSING ACTIVE ALARM AFTER	20	MIN.
DIGITAL INPUTS NAMES	DEFAULT	
ALLOW DTMF CONTROL	NO	

CURRENT SOFTWARE REVISION:

EXECUTIVE: 9V645A01.N APPLICATION: CN028.CDL

DIGITAL INPUTS

DIGITAL INPUT	USAGE	LABEL	NORMAL LOGIC STATE
1	MD/GCP 1	MD/GCP1K /NMD/GCP1K	1
2	ISLAND 1	ISL1K/NISL1K	1
3	GATE OFF	GODK	1
4	GATE CONTROL 1	1GCK	1
5	GATE UP	GPK	1
6	GATE DOWN 1	1GDK	0 OR 1*
7	GATE DOWN 2	2GDK	0 OR 1*
8	BELL/LIGHTS 1	1BELLK	0
9	MD/GCP 2	MD/GCP2K /NMD/GCP2K	1
10	ISLAND 2	ISL2K/NISL2K	1
11	WRAP 1	1WAK	1
12	WRAP 2	2WAK	1
13	BELL/LIGHTS 2	2BELLK	0
14	GATE DOWN 3	3GDK	0 OR 1*
15	GATE DOWN 4	4GDK	0 OR 1*
16	GATE CONTROL 2	2GCK	1
17	TEST SWITCH	TESTSWK	0
18	DAX1	DAX1	1

*NOTE: DEPENDING ON THE DESIGN OF THE CIRCUIT

INDICATIONS

LED	LABEL	OFF=	ON=
01	CROSSING ACTIVE	MD/GCP1K OR MD/GCP2K OR XK OR ISL1K OR ISL2K DOWN	MD/GCP1K AND MD/GCP2K AND XK AND ISL1K AND ISL2K ALL UP
02	ISLAND OCCUPIED	ISLAND 1 & ISLAND 2 OCCUPIED	ISLAND 1 & ISLAND 2 NOT OCCUPIED
03	GATE CONTROL 1	1GCK OFF	1GCK ON
04	GATE CONTROL 2	2GCK OFF	2GCK ON
05	GATE UP	GPK OFF	GPK ON (GATE UP)
06**	GATE DOWN 1	1GDK OFF (GATE 1 NOT DOWN)	1GDK ON (GATE 1 DOWN)
07**	GATE DOWN 2	2GDK OFF (GATE 2 NOT DOWN)	2GDK ON (GATE 2 DOWN)
08**	GATE DOWN 3	3GDK OFF (GATE 3 NOT DOWN)	3GDK ON (GATE 3 DOWN)
09**	GATE DOWN 4	4GDK OFF (GATE 4 NOT DOWN)	4GDK ON (GATE 4 DOWN)
10	BELL CONTROL 1	1BELLK OFF	1BELLK ON
11	BELL CONTROL 2	2BELLK OFF	2BELLK ON
12	WRAP 1	1WAK OFF	1WAK ON
13	WRAP 2	2WAK OFF	2WAK ON
14	GATE OFF	GODK OFF	GODK ON
15	DAX	DAX1-4 OFF	DAX1-4 ON
16	AC POWER	POR OFF	POR ON

**NOTE: THE GATE DOWN LEDS WILL ALWAYS BE ON WHEN GATE IS DOWN. THE LOGIC TAKES CARE OF MAPPING NORMALLY-OPEN OR NORMALLY-CLOSED INPUTS TO TRUE AND FALSE CONDITIONS.

BATTERY INPUT CONFIGURATION

INPUT	USAGE	LABEL	NORMAL RANGE
1	LIGHT BATTERY	XB12/XN12	MINIMUM LEVEL - 18 VDC
2	STANDBY BATTERY	B12/N12	MINIMUM LEVEL - 18 VDC
3	POR	POR	POWER ON > 0.5 VDC

ALARM CONDITIONS

AC POWER ALARM (T1)

GREEN UPON START OF THE APPLICATION PROGRAM.
YELLOW FLASHING IF AC POWER IS LOST FOR LESS THAN AC OFF ALARM TIME.
YELLOW STEADY IF AC POWER LOST FOR LESS THAN AC OFF ALARM TIME AND THEN RESTORED.
RED FLASHING IF AC POWER IS LOST FOR AC OFF ALARM TIME OR MORE.
RED STEADY IF AC POWER LOST FOR AC ALARM TIME OR MORE AND THEN RESTORED FOR A MINIMUM OF 5 MINUTES.

BATTERY ALARM (T2)

GREEN UPON START OF THE APPLICATION PROGRAM.
YELLOW FLASHING IF BATT. POWER MOVES OUT OF RANGE, BUT NOT LONG ENOUGH FOR ALARM.
YELLOW STEADY IF BATT. POWER MOVED OUT OF RANGE, NO ALARM GENERATED AND IS NOW BACK IN RANGE.
RED FLASHING IF BATTERY HAS BEEN OUT OF RANGE FOR OVER 5 SECONDS.
RED STEADY IF POWER MOVED OUT OF RANGE, GENERATED ALARM AND IS NOW BACK IN RANGE FOR 10 SEC.

LIGHT OUT DETECTED (T3)

GREEN UPON START OF THE APPLICATION PROGRAM.
FLASHER FAILURE:
YELLOW FLASHING IF THE FLASH RATE OF ANY LAMP DURING THE LAST ACTIVATION IS ABOVE 65 FPM OR BELOW THE MENU SETTING OF 35 OR 55 FPM.
YELLOW STEADY IF THE FLASH RATE OF ANY LAMP WAS DETECTED OUTSIDE THE NORMAL RANGE BUT HAS SINCE RETURNED TO NORMAL.
BULB FAILURE:
RED FLASHING IF A BURNT BULB IS DETECTED.

WARNING TIME TRACK 1 OR TRACK 2 ALARM (T4)

GREEN UPON START OF THE APPLICATION PROGRAM.
YELLOW FLASHING IF LAST TRAIN BY CROSSING HAD A WARNING TIME LESS THAN DW BUT GREATER THAN MW.
YELLOW STEADY IF PRIOR TRAIN HAD A WARNING TIME LESS THAN DW AND LAST TRAIN HAD NORMAL WARNING TIME.
RED FLASHING IF LAST TRAIN BY CROSSING HAD A WARNING TIME ALARM (LESS THAN MW)
RED STEADY IF PRIOR TRAIN HAD ALARM AND LAST TRAIN HAD NO ALARM.

CROSSING ACTIVE TOO LONG (T5)

GREEN UPON START OF THE APPLICATION PROGRAM.
RED FLASHING IF CROSSING ACTIVE IS TRUE FOR USER SPECIFIED NUMBER OF MINUTES.
RED STEADY IF ALARM CONDITION OCCURRED AND IS CURRENTLY NOT IN ALARM.

GATE REMAINS DOWN ALARM (T6)

GREEN UPON START OF THE APPLICATION PROGRAM.
RED FLASHING IF CURRENTLY IN ALARM.
RED STEADY IF ALARM OCCURRED AND IS PRESENTLY CLEARED.

GATE NOT DOWN ALARM (T7)

GREEN UPON START OF THE APPLICATION PROGRAM.
RED FLASHING IF CURRENTLY IN ALARM.
RED STEADY IF ALARM OCCURRED AND IS PRESENTLY CLEARED AFTER PROPER GATE OPERATION.

GATE NOT RECOVERD ALARM (T8)

GREEN UPON START OF THE APPLICATION PROGRAM.
RED FLASHING IF GATE OFF.
YELLOW FLASHING IF CURRENTLY IN ALARM FOR GATE UP INPUT REMAINS LOW FOR >20 SEC. AFTER GCK ENERGIZED.
YELLOW STEADY IF ALARM OCCURRED AND IS PRESENTLY CLEARED.

TROUBLE LIGHT (RELAY OUTPUT 1 USED TO DRIVE EXTERNAL LAMP)

WILL FLASH IF ONE OF THE FOLLOWING IS OR WAS TRUE:
- LESS THAN MINIMUM WARNING TIME PROVIDED FOR TRAIN
- GATE NOT DOWN WHEN ISLAND OCCUPIED
- GATE DOES NOT RECOVER

USE CLEAR ALARM BUTTON TO RESET FLASHING TROUBLE LIGHT

WILL FLASH IF ONE OF THE FOLLOWING IS TRUE:
- AC POWER OFF MORE OVER AC ALARM OFF TIME
- BATTERY OUT OF RANGE FOR OVER 5 SECONDS
- CROSSING ACTIVE TOO LONG FOR LAST TRAIN
- GATE DOWN FOR OVER 20 MINUTES FOR LAST TRAIN
- GATE CAME DOWN SLOW FOR LAST TRAIN

cha-141.35-11.dgn
31-AUG-2015

REVISIONS

NO.	DATE	BY	DESCRIPTION	APP. BY
1				
2				
3				
4				
5				

SIEMENS INDUSTRY INC

DES.: NAD	DATE: N/A	JOB NO.: PICA10588	
CKD.: MRB	ISSUE DATE: N/A	EST. NO.: XP-7839	
DRN.: NAD	PLAN NO.: N/A	SHEET 11 OF 14	
P TIME: 15:14	P DATE: 31-AUG-2015	CAD ID.: CHA-141.35-11	

SII 28 MAY 2015

PROPOSED
DESIGN NO. 15-0151
RED-IN YELLOW-OUT

AS INSTALLED
DATE
BY
(PRINT NAME)

PROPOSED D	M	Y	REVISIONS	D	C	COMPLETED D	M	Y	C
			PLAN REDRAWN			28	05	15	NAD
28	05	15	ADAMS ST CWT UPGRADE	NAD	MRB				

REGION SOUTHERN
SUB. CHAMPAIGN 341

SIGNALS AND COMMUNICATIONS HOMEWOOD
27 SEPTEMBER 2004
DES. CSM
CH. PWW

SEAR II
PROGRAM DATA
PESOTUM, IL
TR 295A

CHA-141.35-11

DOT#289 101M

SIEMENS INDUSTRY INC
LOUISVILLE DIVISION, LOUISVILLE, KY

REVISIONS				
NO.	DATE	BY	DESCRIPTION	APP. BY
1				
2				
3				
4				
5				

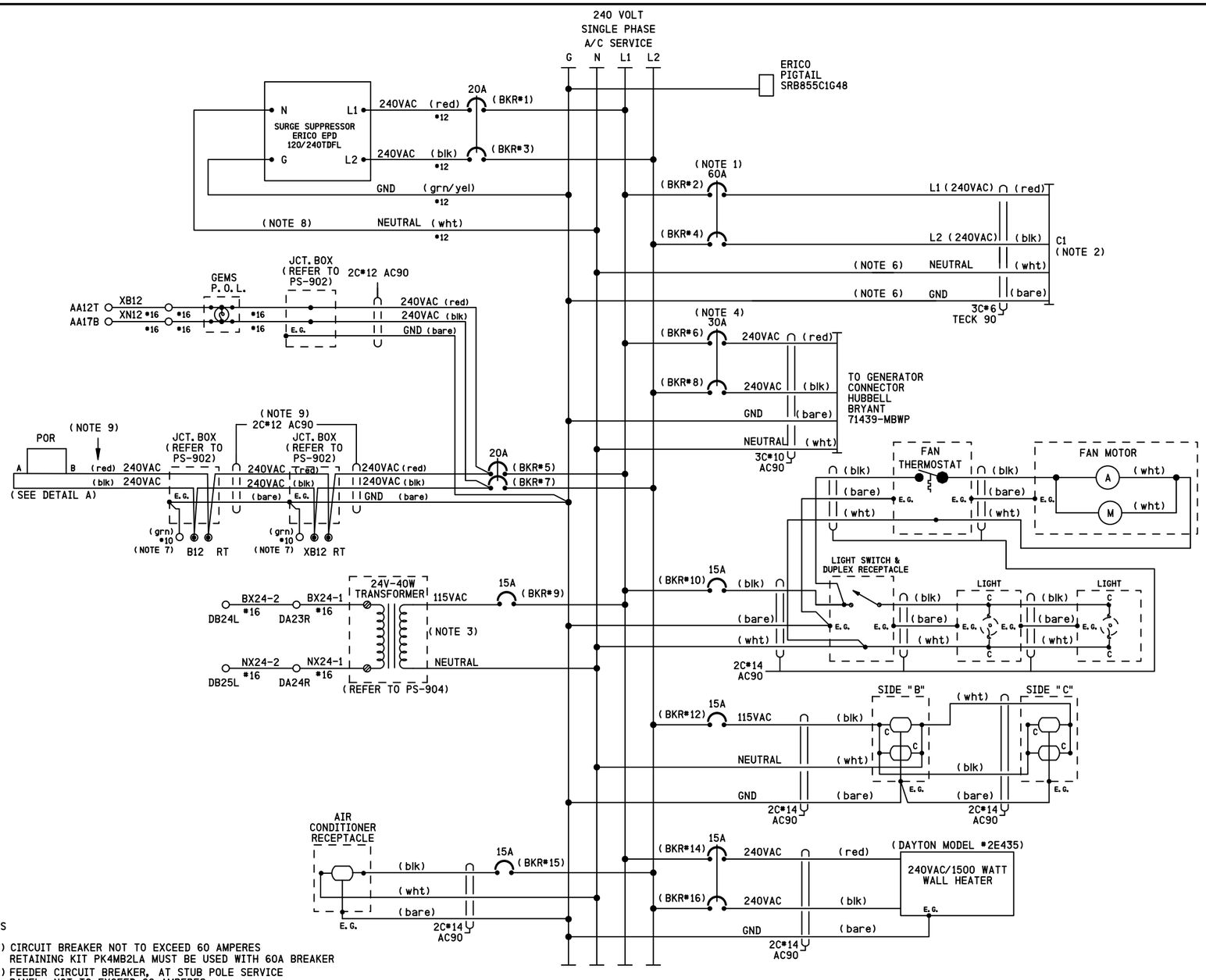

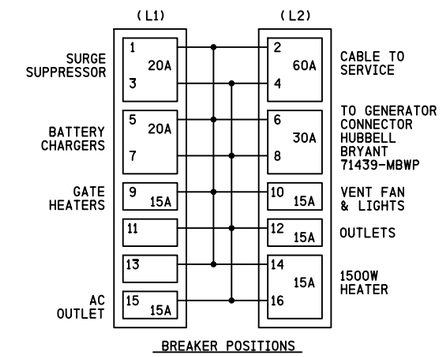

RELAY DETAIL A

RELAY - POTTER & BRUMFIELD
MODEL KUP-14A15-240 SOCKET MOUNTABLE
240 VAC W/ 3 FORM C CONTACTS.

SOCKET - SCREW TERMINAL
MODEL 27E121

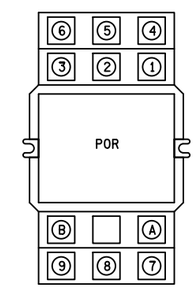

RELAY WIRING DIAGRAM (REAR VIEW)

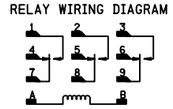

NOTE:
SOCKET NUMBERING CORRESPONDS
DIRECTLY WITH RELAY NUMBERING.
(COIL SHOWN ENERGIZED)

NOTES

1) CIRCUIT BREAKER NOT TO EXCEED 60 AMPERES RETAINING KIT PK4MB2LA MUST BE USED WITH 60A BREAKER
2) FEEDER CIRCUIT BREAKER, AT STUB POLE SERVICE PANEL, NOT TO EXCEED 60 AMPERES
3) 24 VOLT - 40 WATT TRANSFORMER (CN STOCK *02-45-367)
4) A SWITCH TRANSFER KIT MUST BE INSTALLED BETWEEN THE SERVICE DISCONNECT BREAKER AND THE GENERATOR HOOK UP
5) WHERE SEPARATE GROUND WIRE EXISTS BETWEEN THE SERVICE AND THE LOAD CENTER, REMOVE THE BRASS COLORED BONDING SCREW (REFER TO SCHEMATIC ON BOX COVER FOR EXACT LOCATION)
6) S.C.*6 STRANDED, CSA TYPE R90 (X-LINK)
7) GROUND LUG LOCATED ON CHARGER HOUSING
8) KEEP LEADS AS SHORT AS POSSIBLE
9) THE WHITE CONDUCTOR MUST BE MADE PERMANENTLY UNIDENTIFIABLE BY TAPING THIS CONDUCTOR RED. TAPING MUST BE CONTINUOUS WHERE THE SEPARATE CONDUCTORS HAVE BEEN MADE ACCESSIBLE AND VISIBLE

SIEMENS INDUSTRY INC			
DES.: NAD	DATE: N/A	JOB NO.: PICA10588	
CKD.: MRB	ISSUE DATE: N/A	EST. NO.: XP-7839	
DRN.: NAD	PLAN NO.: N/A	SHEET 12 OF 14	
P TIME: 15:15	P DATE: 31-AUG-2015	CAD ID.: CHA-141.35-12	

PROPOSED D	M	Y	REVISIONS	D	C	COMPLETED D	M	Y	C
			PLAN REDRAWN			28	05	15	NAD

REGION SOUTHERN
SUB. CHAMPAIGN 341
SIGNALS AND COMMUNICATIONS HOMEWOOD
27 SEPTEMBER 2004
DES. CSM
CH. PWW
POWER DISTRIBUTION
PESOTUM, IL
TR 295A
CHA-141.35-12
DOT#289 101M

SIEMENS INDUSTRY INC
LOUISVILLE DIVISION, LOUISVILLE, KY

cha-141.35-12.dgn
31-AUG-2015

REVISIONS			
NO.	DATE	BY	DESCRIPTION	APP. BY
1				
2				
3				
4				
5				

CALIBRATION HISTORY

INITIAL SET UP BY:_____ DATE:_____

80012 DC VOLTAGE READINGS AFTER CALIBRATION		CALIBRATION HISTORY				LINEARIZATION HISTORY (NOTE 1)													
		EZ/EX VALUES (TRACK UNOCCUPIED)				HARD WIRE SHUNT AT TERMINATION SHUNT						HARD WIRE SHUNT AT 50 PERCENT POINT OF SHUNT							
T1	T2	EZ		EX		EZ VALUE		EX VALUE		50 PERCENT OF EZ VALUE		NO LINEARIZATION				LINEARIZATION COMPLETE			
Z1=	Z1=											EZ VALUE		EX VALUE		STEP±		EZ	
Z2=	Z2=	NORMAL	STANDBY	NORMAL	STANDBY	NORMAL	STANDBY	NORMAL	STANDBY	NORMAL	STANDBY	NORMAL	STANDBY	NORMAL	STANDBY	NORMAL	STANDBY	NORMAL	STANDBY
NORTH	TRACK 1																		
SOUTH	TRACK 1																		
NORTH	TRACK 2	N/A	N/A	N/A	N/A	N/A	N/A	N/A	N/A	N/A	N/A	N/A	N/A	N/A	N/A	N/A	N/A	N/A	N/A
SOUTH	TRACK 2	N/A	N/A	N/A	N/A	N/A	N/A	N/A	N/A	N/A	N/A	N/A	N/A	N/A	N/A	N/A	N/A	N/A	N/A

REVISION 1 BY:_____ DATE:_____

80012 DC VOLTAGE READINGS AFTER CALIBRATION		CALIBRATION HISTORY				LINEARIZATION HISTORY (NOTE 1)													
		EZ/EX VALUES (TRACK UNOCCUPIED)				HARD WIRE SHUNT AT TERMINATION SHUNT						HARD WIRE SHUNT AT 50 PERCENT POINT OF SHUNT							
T1	T2	EZ		EX		EZ VALUE		EX VALUE		50 PERCENT OF EZ VALUE		NO LINEARIZATION				LINEARIZATION COMPLETE			
Z1=	Z1=											EZ VALUE		EX VALUE		STEP±		EZ	
Z2=	Z2=	NORMAL	STANDBY	NORMAL	STANDBY	NORMAL	STANDBY	NORMAL	STANDBY	NORMAL	STANDBY	NORMAL	STANDBY	NORMAL	STANDBY	NORMAL	STANDBY	NORMAL	STANDBY
NORTH	TRACK 1																		
SOUTH	TRACK 1																		
NORTH	TRACK 2	N/A	N/A	N/A	N/A	N/A	N/A	N/A	N/A	N/A	N/A	N/A	N/A	N/A	N/A	N/A	N/A	N/A	N/A
SOUTH	TRACK 2	N/A	N/A	N/A	N/A	N/A	N/A	N/A	N/A	N/A	N/A	N/A	N/A	N/A	N/A	N/A	N/A	N/A	N/A

REVISION 2 BY:_____ DATE:_____

80012 DC VOLTAGE READINGS AFTER CALIBRATION		CALIBRATION HISTORY				LINEARIZATION HISTORY (NOTE 1)													
		EZ/EX VALUES (TRACK UNOCCUPIED)				HARD WIRE SHUNT AT TERMINATION SHUNT						HARD WIRE SHUNT AT 50 PERCENT POINT OF SHUNT							
T1	T2	EZ		EX		EZ VALUE		EX VALUE		50 PERCENT OF EZ VALUE		NO LINEARIZATION				LINEARIZATION COMPLETE			
Z1=	Z1=											EZ VALUE		EX VALUE		STEP±		EZ	
Z2=	Z2=	NORMAL	STANDBY	NORMAL	STANDBY	NORMAL	STANDBY	NORMAL	STANDBY	NORMAL	STANDBY	NORMAL	STANDBY	NORMAL	STANDBY	NORMAL	STANDBY	NORMAL	STANDBY
NORTH	TRACK 1																		
SOUTH	TRACK 1																		
NORTH	TRACK 2	N/A	N/A	N/A	N/A	N/A	N/A	N/A	N/A	N/A	N/A	N/A	N/A	N/A	N/A	N/A	N/A	N/A	N/A
SOUTH	TRACK 2	N/A	N/A	N/A	N/A	N/A	N/A	N/A	N/A	N/A	N/A	N/A	N/A	N/A	N/A	N/A	N/A	N/A	N/A

NOTE

1) SET UP APPROACH LENGTH AND LINEARIZATION CALIBRATION
VERIFY THAT "ENHANCED DETECTION" MODE IS PROGRAMMED "OFF"
BEFORE ATTEMPTING LINEARIZATION PROCEDURES

SIEMENS INDUSTRY INC			
DES.: NAD	DATE: N/A	JOB NO.: PICA10588	
CKD.: MRB	ISSUE DATE: N/A	EST. NO.: XP-7839	
DRN.: NAD	PLAN NO.: N/A	SHEET 13 OF 14	
P TIME: 15:15	P DATE: 31-AUG-2015	CAD ID.: CHA-141.35-13	

PROPOSED D	M	Y	REVISIONS	D	C	COMPLETED D	M	Y	C
			PLAN REDRAWN			28	05	15	NAD

REGION SOUTHERN
SUB. CHAMPAIGN 341

SIGNALS AND COMMUNICATIONS HOMEWOOD
27 SEPTEMBER 2004
DES. CSM
CH. PWW

GCP 3000 (MODULE #80214)
CALIBRATION HISTORY
PESOTUM, IL
TR 295A

CHA-141.35-13

DOT#289 101M

SIEMENS INDUSTRY INC
LOUISVILLE DIVISION, LOUISVILLE, KY

cha-141.35-13.dgn
31-AUG-2015

REVISIONS				
NO.	DATE	BY	DESCRIPTION	APP. BY
1				
2				
3				
4				
5				

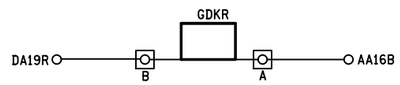

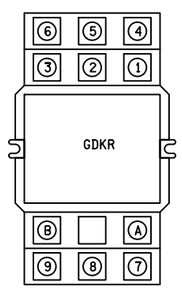

RELAY DETAIL

RELAY - POTTER & BRUMFIELD
MODEL KUP-14D15-12 SOCKET MOUNTABLE
12 VAC W/ 3 FORM C CONTACTS.

SOCKET - SCREW TERMINAL
MODEL 27E121.

RELAY WIRING DIAGRAM (REAR VIEW)

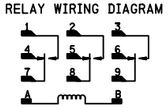

NOTE:
SOCKET NUMBERING CORRESPONDS
DIRECTLY WITH RELAY NUMBERING.
(COIL SHOWN ENERGIZED)

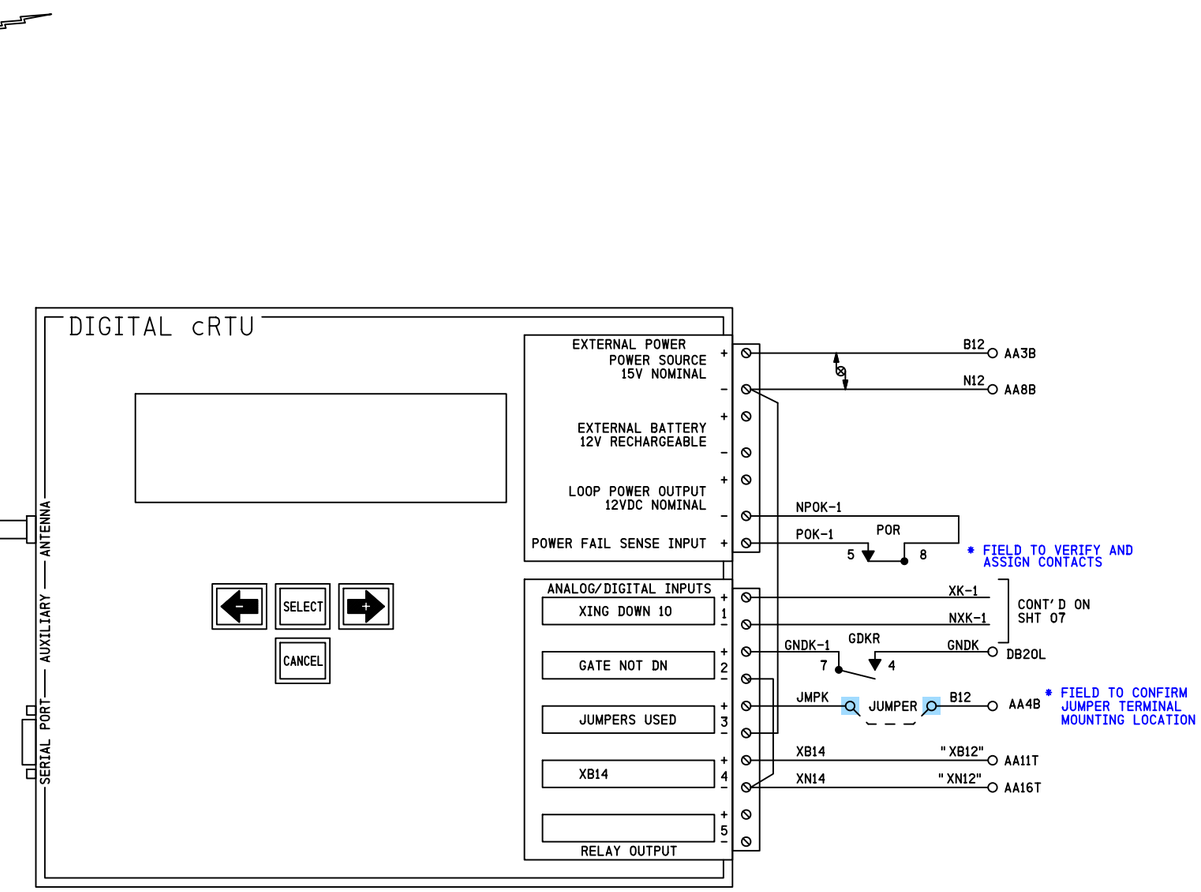

CONFIGKEY:	30
MODEL:	C06C/2ANA V2.3
SERIAL #:	
SITE IDENTIFIER:	289 101M

* FIELD TO PROVIDE SERIAL *

	LOW ALARM	RETURN	HIGH ALARM	RETURN
B12	11.6	12.6	15.6	14.6
B14	13.8	14.8	17.8	16.8

NOTES

1) ALL WIRING TO BE #16 AWG MINIMUM UNLESS OTHERWISE NOTED

DENOTES TWISTED PAIR

PROPOSED
DESIGN NO. 10-0677
RED-IN YELLOW-OUT

AS INSTALLED
DATE _____
BY _____
(PRINT NAME)

PROPOSED D	M	Y	REVISIONS	D	C	COMPLETED D	M	Y	C
			PLAN REDRAWN			28	05	15	NAD

REGION SOUTHERN
SUB. CHAMPAIGN 341

SIGNALS AND COMMUNICATIONS HOMEWOOD
17 AUGUST 2011
DES. NST
CH. NST

DIGITAL CRTU WIRING

PESOTUM, IL
TR 295A

CHA-141.35-14

DOT#289 101M

14

SIEMENS INDUSTRY INC

DES. : NAD	DATE: N/A	JOB NO. : PICA10588	
CKD. : MRB	ISSUE DATE: N/A	EST. NO. : XP-7839	
DRN. : NAD	PLAN NO. : N/A	SHEET 14 OF 14	
P. TIME: 15:15	P. DATE: 31-AUG-2015	CAD ID. : CHA-141.35-14	

SIEMENS INDUSTRY INC
LOUISVILLE DIVISION, LOUISVILLE, KY

cha-141.35-14.dgn
31-AUG-2015