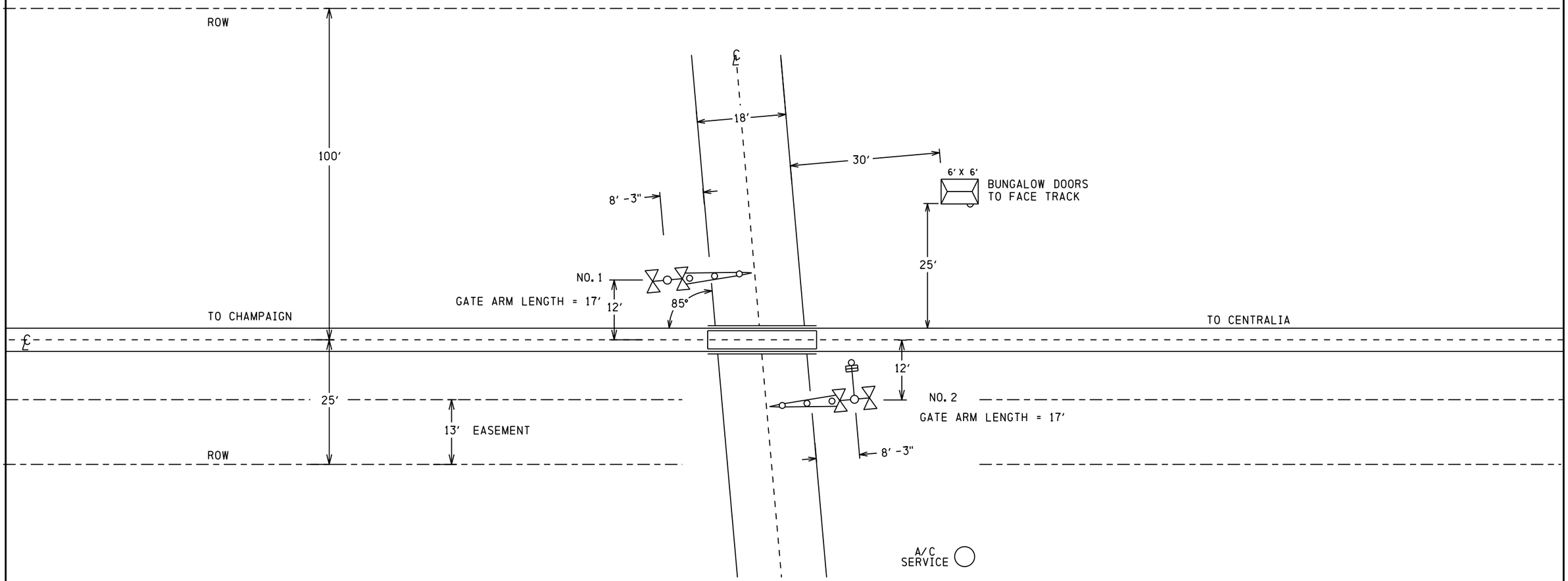

NOTES

1- DESIGN SPEED 79 M.P.H.

2- CLEARANCE DISTANCE 35 FEET MAXIMUM.

3- CONSTANT WARNING CONTROL.

4- APPROACH CIRCUIT DISTANCE PROVIDES FOR:

TRAFFIC SIGNAL PRE-EMPTION	00 SEC. (00 SEC. ADVANCE)
MINIMUM WARNING TIME	20 SEC.
GATE DESCENT DELAY TIME	04 SEC.
BUFFER TIME	10 SEC.
EQUIPMENT REACTION TIME	05 SEC.

PROPOSED D	PROPOSED M	PROPOSED Y	REVISIONS	D	C	COMPLETED D	COMPLETED M	COMPLETED Y	C
			AS INSTALLED			02	10	12	LSS
11	09	13	ADD EC5 REPEATER	MZC	PJB	11	09	15	MZC

REGION SOUTHERN

SUB. CHAMPAIGN 341

SIGNALS AND COMMUNICATIONS HOMEWOOD

DES. TMF

19 AUGUST 2011

CH. BJW

SITUATION SKETCH
SCALE 1" = 20′
PESOTUM, IL
400N

CHA-140.34-0

DOT# 289 100F

17

cha-140.34-0.dgn
24-SEP-2015

REVISIONS			
NO.	DATE	BY	DESCRIPTION	APP. BY
1				
2				
3				
4				
5				

FLASHING LIGHT UNITS ALIGNMENT TABLE

PRIMARY FRONT LIGHTS FOR VEHICLES							
SIG #	LIGHT #	ROUNDEL		ROAD SPEED	MINIMUM DISTANCE	RECOMMENDED DISTANCE	ALIGNMENT DISTANCE
		SIZE	TYPE	MPH	FT	FT	FT
1	1,2	12"	LED	55	625	950	950
2	7,8	12"	LED	55	625	950	950
BACK LIGHTS FOR VEHICLES							
SIG #	LIGHT #	ROUNDEL		ROAD SPEED	MINIMUM DISTANCE	RECOMMENDED DISTANCE	ALIGNMENT DISTANCE
		SIZE	TYPE	MPH	FT	FT	FT
1	3,4	12"	LED	N/A	N/A	N/A	50
2	5,6	12"	LED	N/A	N/A	N/A	50

NOTE
FIELD IS TO PROVIDE THE ACTUAL ALIGNMENT DISTANCE AS DETERMINED BY
SCP-706: ROAD CROSSING DEVICE LIGHT UNIT ALIGNMENT PROCEDURES

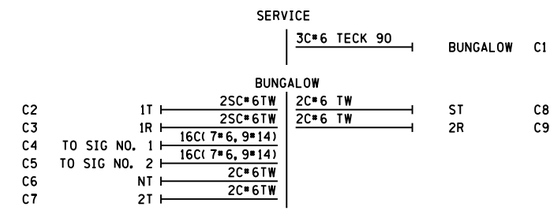

CONTENT	SHEET #
SITUATION SKETCH	0
TRACK LAYOUT & INDEX	01
GCP 4000 CHASSIS & MODULE LAYOUT	02
GCP 4000 PROGRAM INFORMATION	03
GCP 4000/SEAR III SETUP & PROGRAM	04
GCP 4000 CALIBRATION HISTORY	05
GCP 4000 TRACK 1 & 2 MODULE CONNECTIONS	06
GCP 4000 CPUII+ & VHF COMMUNICATOR	07
GCP 4000/SEARIII INTERNAL EVENT ANALYZER WITH GFT	08
GCP 4000/SSCCIIII GATE CONTROLLERS W/ ILODS	09
GATE 1 & 2 MECH. CONTROL CIRCUITS SAFETRAN S-60	10
DC DISTRIBUTION	11
AC DISTRIBUTION	12
BUNGALOW LAYOUT TOP VIEW	13
BUNGALOW LAYOUT SIDE D & L.I.G.P.	14
BUNGALOW LAYOUT SIDES A, B & C	15
TRACK CIRCUITS	16
EC5 CHASSIS, SOFTWARE CONFIG. & MODULE CONNECTOR USAGE	17

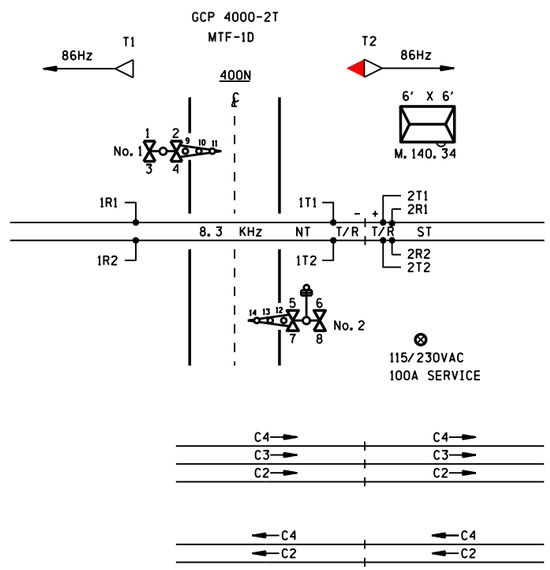

SIEMENS INDUSTRY INC

DES.: NAD	DATE: 28/05/15	JOB NO.: PICA10588	
CKD.: MRB	ISSUE DATE: N/A	EST. NO.: XP-7839	
DRN.: NAD	PLAN NO.: N/A	SHEET 1 OF 17	
P TIME: 09:17	P DATE: $$PLOT_DATE	CAD ID.: CHA-140.34-01	

SII 28 MAY 2015

PROPOSED
DESIGN NO. 15-0151
RED-IN YELLOW-OUT

AS INSTALLED
DATE _____
BY _____
(PRINT NAME)

PROPOSED D	PROPOSED M	PROPOSED Y	REVISIONS	D	C	COMPLETED D	COMPLETED M	COMPLETED Y	C
			AS INSTALLED			02	10	12	LSS
11	09	13	ADD EC5 REPEATER	MZC	PJB	11	09	15	MZC
28	05	15	ADAMS ST CWT UPGRADE	NAD	MRB				

REGION SOUTHERN
SUB. CHAMPAIGN 341
SIGNALS AND COMMUNICATIONS HOMEWOOD
DES. TMF
19 AUGUST 2011
CH. BJW
TRACK LAYOUT & INDEX
PESOTUM, IL
400N
CHA-140.34-01
DOT# 289 100F

SIEMENS INDUSTRY INC
LOUISVILLE DIVISION, LOUISVILLE, KY

cha-140.34-01.dgn
24-SEP-2015

cha-140.34-02.dgn
24-SEP-2015

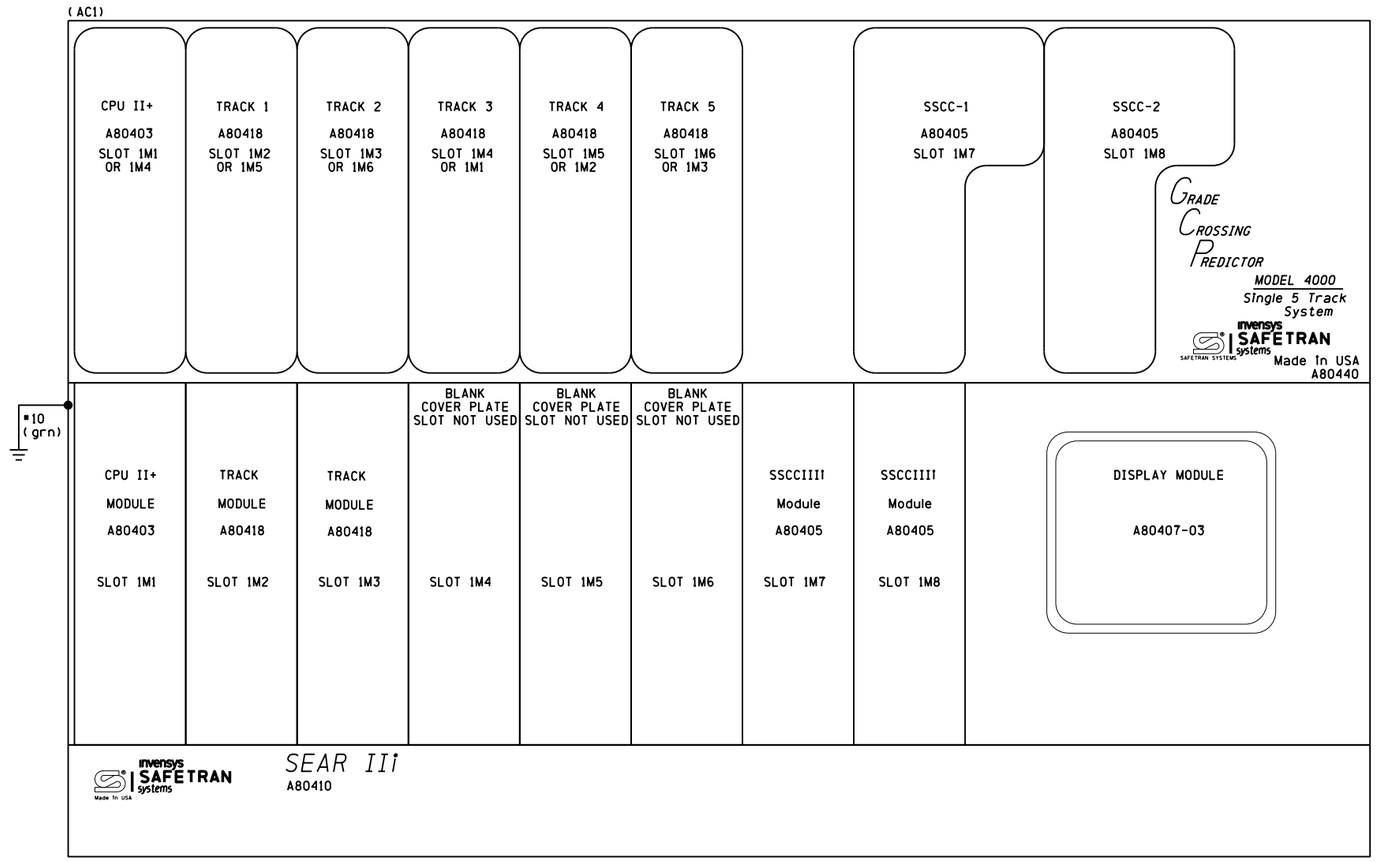

NOTES

1) DISABLE THE DISPLAY HEATER BY REMOVING JUMPER J-22 (LOCATED AT THE EDGE OF THE DISPLAY MODULE CARD THAT PLUGS INTO THE CHASSIS)

2) SET THE TRANSFER INTERVAL TIME TO 3 MINUTES BY SETTING DIPSWITCH S3 (LOCATED IN THE UPPER LEFT CORNER OF THE TRANSFER MODULE CARD) TO:

ATTENTION!

ENSURE THE DISPLAY MODULE HEATER IS DISABLED
LEAVING THE DISPLAY HEATER ENABLED WILL REDUCE THE AMOUNT OF BATTERY STANDBY TIME IN THE EVENT OF AN AC POWER FAILURE

HEATER FUNCTION IS JUMPER SELECTABLE ON THE DISPLAY MODULE BOARD
THREE OPTIONS ARE AVAILABLE
NORMAL LCD HTR (DEFAULT)
HI CURRENT
NO JUMPER (HEATER DISABLED)

PROPOSED D	M	Y	REVISIONS	D	C	COMPLETED D	M	Y	C
			AS INSTALLED			02	10	12	LSS
11	09	13	ADD EC5 REPEATER	MZC	PJB	11	09	15	MZC

REGION SOUTHERN
SUB. CHAMPAIGN 341
CN

SIGNALS AND COMMUNICATIONS HOMEWOOD
DES. TMF
19 AUGUST 2011
CH. BJW

GCP 4000
CHASSIS & MODULE LAYOUT
PESOTUM, IL
400N

CHA-140.34-02

DOT# 289 100F

REVISIONS				
NO.	DATE	BY	DESCRIPTION	APP. BY
1				
2				
3				
4				
5				

```
Program Report
--------------

Location and SIN
----------------
DOT Number: 289100F
Milepost Number: 140.34
Site Name: 400N

SIN: 762010010016

MCF and Template Selection
--------------------------
MCF Name: GCP-T6X-02-2.mcf
MCF Revision: 022
MCFCRC: 79225F13

Template = 1D:3 Uni pairs (OCCN)

Check Numbers
-------------
Office Check Number: 1F4D0440   2C5455F1
Config. Check Number: 2A39308A  4DA143CA
(Based on MCF Revision 022)


Program
-------
BASIC:  module configuration
Track 1/PSO 1 Slot = Track (OCCN)
Track 2/RIO 1 Slot = Track (OCCN)
Track 3/PSO 2 Slot = Not Used (OCCN)
Track 4/PSO 3 Slot = Not Used (OCCN)
Track 5/RIO 2 Slot = Not Used (OCCN)
Track 6/RIO 3 Slot = Not Used (OCCN)
SSCC-1 Slot = SSCC31 (OCCN)
SSCC-2 Slot = SSCC31 (OCCN)
SEAR Used = Yes (OCCN)

BASIC:  MS/GCP operation
Track 1 : MS/GCP Operation = Yes (OCCN)
Track 2 : MS/GCP Operation = Yes (OCCN)

BASIC:  Island operation
Track 1 : Island Used = Internal (OCCN)
Track 2 : Island Used = No (OCCN)

BASIC:  preemption
Preempt Logic = No (OCCN)

BASIC:  radio Dax links
Radio DAX link A Used = No (OCCN)
Radio DAX link B Used = No (OCCN)

BASIC:  Vital Comms links
Vital Comms link 1 Used = No (OCCN)
Vital Comms link 2 Used = No (OCCN)

PREDICTORS:  track 1
Track 1 : Prime Used = Yes (OCCN)
Track 1 : Dax A Used = No (OCCN)
Track 1 : Dax B Used = No (OCCN)
Track 1 : Dax C Used = No (OCCN)
Track 1 : Dax D Used = No (OCCN)
Track 1 : Dax E Used = No (OCCN)
Track 1 : Dax F Used = No (OCCN)
Track 1 : Dax G Used = No (OCCN)

PREDICTORS:  track 2
Track 2 : Prime Used = Yes (OCCN)
Track 2 : Dax A Used = No (OCCN)
Track 2 : Dax B Used = No (OCCN)
Track 2 : Dax C Used = No (OCCN)
Track 2 : Dax D Used = No (OCCN)
Track 2 : Dax E Used = No (OCCN)
Track 2 : Dax F Used = No (OCCN)
Track 2 : Dax G Used = No (OCCN)

GCP:  track 1
Track 1 : GCP Freq Category = Standard (Field)
Track 1 : GCP Frequency = 86 Hz (Field, TCN)
Track 1 : Approach Distance = 4070 ft (Field, TCN)
Track 1 : Uni/Bi/Sim-Bidirni = Unidirni (OCCN, TCN)
Track 1 : GCP Transmit Level = High (Field, TCN)
Track 1 : Island Connection = Isli (OCCN)
Track 1 : Directionally Wired = No (OCCN)
Track 1 : Island Distance = 120 ft (Field, TCN)
Track 1 : Computed Distance = 4610 ft (Field, TCN)
Track 1 : Linearization Steps = 108   (Field, TCN)

GCP:  track 1 enhanced det
Track 1 : Inbound PS Sensitivity = High (Field)
Track 1 : Speed Limiting Used = Yes (Field)
Track 1 : Outbound False Act Lvl = Normal (Field)
Track 1 : Outbound PS Timer = 20 sec (Field)
Track 1 : Trailing Switch Logic = On (Field)
Track 1 : Post Joint Detn Time = 15 sec (OCCN)
Track 1 : Adv Appr Predn = No (OCCN)
Track 1 : Cancel Pickup Delay = This Isl (OCCN)

GCP:  track 1 BIDAX RX
Track 1 : BIDAX To RX Appr = Not Used (OCCN)

GCP:  track 1 BIDAX TX
Track 1 : BIDAX To TX Appr = Not Used (OCCN)

GCP:  track 1 prime
Track 1 : Prime Warning Time = 30 sec (OCCN)
Track 1 : Prime Offset Distance = 0 ft (Field)
Track 1 : Switch MS EZ Level = 10   (OCCN)
Track 1 : Prime MS/GCP Mode = Pred (OCCN)
Track 1 : Prime Pickup Delay = 30 sec (OCCN)
Track 1 : Prime UAX = Not Used (OCCN)

GCP:  track 1 pos start
Track 1 : Positive Start = Off (OCCN)
Track 1 : Sudden Shnt Det Used = No (OCCN)
Track 1 : Low EZ Detection Used = No (OCCN)

GCP:  track 1 MS Control
Track 1 : MS/GCP Ctrl IP Used = No (OCCN)
Track 1 : MS Sensitivity Level = 0   (Field)
Track 1 : Compensation Level = 1300   (Field, TCN)
Track 1 : Warn Time-Ballast Comp = High (Field, TCN)
Track 1 : Low EX Adjustment = 39   (Field)
Track 1 : Bidirn Dax Passthru = No (OCCN)
Track 1 : False Act on Train Stop = No (Field)
Track 1 : EX Limiting Used = Yes (Field)
Track 1 : EZ Correction Used = Yes (Field)

GCP:  track 2
Track 2 : GCP Freq Category = Standard (Field)
Track 2 : GCP Frequency = 86 Hz (Field, TCN)
Track 2 : Approach Distance = 4070 ft (Field, TCN)
Track 2 : Uni/Bi/Sim-Bidirni = Sim. Bidirni (OCCN, TCN) Unidirni
Track 2 : GCP Transmit Level = High (Field, TCN)
Track 2 : Island Connection = Isli (OCCN)
Track 2 : Directionally Wired = No (OCCN)
Track 2 : Island Distance = 0 ft (Field, TCN)
Track 2 : Computed Distance = 4539 ft (Field, TCN)
Track 2 : Linearization Steps = 106   (Field, TCN)

GCP:  track 2 enhanced det
Track 2 : Inbound PS Sensitivity = High (Field)
Track 2 : Speed Limiting Used = Yes (Field)
Track 2 : Outbound False Act Lvl = Normal (Field)
Track 2 : Outbound PS Timer = 20 sec (Field)
Track 2 : Trailing Switch Logic = On (Field)
Track 2 : Post Joint Detn Time = 15 sec (OCCN)
Track 2 : Adv Appr Predn = No (OCCN)
Track 2 : Cancel Pickup Delay = This Isl (OCCN)

GCP:  track 2 BIDAX RX
Track 2 : BIDAX To RX Appr = Not Used (OCCN)

GCP:  track 2 BIDAX TX
Track 2 : BIDAX To TX Appr = Not Used (OCCN)

GCP:  track 2 prime
Track 2 : Prime Warning Time = 30 sec (OCCN)
Track 2 : Prime Offset Distance = 0 ft (Field)
Track 2 : Switch MS EZ Level = 10   (OCCN)
Track 2 : Prime MS/GCP Mode = Pred (OCCN)
Track 2 : Prime Pickup Delay = 30 sec (OCCN)
Track 2 : Prime UAX = Not Used (OCCN)

GCP:  track 2 pos start
Track 2 : Positive Start = Off (OCCN)
Track 2 : Sudden Shnt Det Used = No (OCCN)
Track 2 : Low EZ Detection Used = No (OCCN)

GCP:  track 2 MS Control
Track 2 : MS/GCP Ctrl IP Used = No (OCCN)
Track 2 : MS Sensitivity Level = 0   (Field)
Track 2 : Compensation Level = 1300   (Field, TCN)
Track 2 : Warn Time-Ballast Comp = High (Field, TCN)
Track 2 : Low EX Adjustment = 39   (Field)
Track 2 : Bidirn Dax Passthru = No (OCCN)
Track 2 : False Act on Train Stop = No (Field)
Track 2 : EX Limiting Used = Yes (Field)
Track 2 : EZ Correction Used = Yes (Field)

ISLAND:  track 1
Track 1 : Isl Frequency = 8.3 kHz (Field)
Track 1 : Pickup Delay (2s +) = 0 sec (OCCN)
Track 1 : Isl Enable IP Used = No (OCCN)

AND:  track And ing
AND 1 XR Used = Yes (OCCN)
AND 2 Used = Yes (OCCN)
AND 3 Used = No (OCCN)
AND 4 Used = No (OCCN)
AND 5 Used = No (OCCN)
AND 6 Used = No (OCCN)
AND 7 Used = No (OCCN)
AND 8 Used = No (OCCN)

AND:  AND 1 XR
AND 1 XR Track 1 = Prime (OCCN)
AND 1 XR Track 2 = Prime (OCCN)
AND 1 Enable Used = Yes (OCCN)
And 1 Enable Pickup = 0 sec (OCCN)
AND 1 Enable Drop = 0 sec (OCCN)
AND 1 Wrap Used = No (OCCN)

AND:  AND 2
AND 2 Track 1 = Not Used (OCCN)
AND 2 Track 2 = Not Used (OCCN)
AND 2 Enable Used = Yes (OCCN)
AND 2 Enable Pickup = 2 sec (OCCN)
AND 2 Enable Drop = 0 sec (OCCN)
AND 2 Wrap Used = No (OCCN)

ADVANCED:  MS restart
MS/GCP Restart Used = No (OCCN)

ADVANCED:  out of service
OOS Control = OOS IPs (OCCN)

ADVANCED:  out of service 2
T1 OOS Control = OOS Input 1 (OCCN)
T2 OOS Control = OOS Input 1 (OCCN)
T1 OOS Controls = GCP and Island (OCCN)
T2 OOS Controls = GCP Only (OCCN)

ADVANCED:  track wrap circuits
Wrap LOS Timer = 5 sec (OCCN)
Track 1 Wrap Used = No (OCCN)
Track 2 Wrap Used = No (OCCN)

ADVANCED:  trk 1 overrides
Track 1 : All Predictors Override Used = No (OCCN)

ADVANCED:  trk 2 overrides
Track 2 : All Predictors Override Used = No (OCCN)

ADVANCED:  OR logic
OR 1 Used = No (OCCN)
OR 2 Used = No (OCCN)
OR 3 Used = No (OCCN)
OR 4 Used = No (OCCN)

ADVANCED:  Internal I/O 1
Pass Thrus = Yes (OCCN)
Int.1 Sets = AND 2 Enable (OCCN)
Int.1 Set by = Passthru State 1 (OCCN)
Int.2 Sets = AND 2 Enable (OCCN)
Int.2 Set by = Passthru State 2 (OCCN)
Int.3 Sets = GD 1.1 (OCCN)
Int.3 Set by = Passthru State 1 (OCCN)
Int.4 Sets = GD 2.1 (OCCN)
Int.4 Set by = Passthru State 2 (OCCN)

ADVANCED:  Internal I/O 2
Int.5 Sets = Not Used (OCCN)
Int.5 Set by = Not Used (OCCN)
Int.6 Sets = Not Used (OCCN)
Int.6 Set by = Not Used (OCCN)
Int.7 Sets = Not Used (OCCN)
Int.7 Set by = Not Used (OCCN)
Int.8 Sets = Not Used (OCCN)
Int.8 Set by = Not Used (OCCN)

ADVANCED:  Internal I/O 3
Int.9 Sets = Not Used (OCCN)
Int.9 Set by = Not Used (OCCN)
Int.10 Sets = Not Used (OCCN)
Int.10 Set by = Not Used (OCCN)
Int.11 Sets = Not Used (OCCN)
Int.11 Set by = Not Used (OCCN)
Int.12 Sets = Not Used (OCCN)
Int.12 Set by = Not Used (OCCN)

ADVANCED:  Internal I/O 4
Int.13 Sets = Not Used (OCCN)
Int.13 Set by = Not Used (OCCN)
Int.14 Sets = Not Used (OCCN)
Int.14 Set by = Not Used (OCCN)
Int.15 Sets = Not Used (OCCN)
Int.15 Set by = Not Used (OCCN)
Int.16 Sets = Not Used (OCCN)
Int.16 Set by = Not Used (OCCN)

ADVANCED:  site options
Daylight Savings = On (Field)
Units = Standard (OCCN)
Maint Call Rpt IP Used = No (OCCN)
Emergency Activate IP = No (OCCN)
EZ/EX Logging = Change (Field)
EZ/EX Point Change = 3   (Field)

SSCC
Gates Used = Yes (OCCN)
SSCC1+2 GPs Coupled = Yes (OCCN)
Min Activation = 20 sec (OCCN)
Rmt Activation Cancel = 3 min (OCCN)
Bell On Gate Rising = No (OCCN)
Mute Bell On Gate Down = Yes (OCCN)
SSCCIV Controller Used = No (OCCN)

SSCC:  1
SSCC-1 Activation = AND 1 XR (OCCN)
SSCC-1 Gate Delay = 4 sec (OCCN)
SSCC-1 Number of GPs = 1 (OCCN)
SSCC-1 Number of GDs = 1 (OCCN)
SSCC 1 : Flash Rate = 55 (OCCN)
SSCC 1 : Low Battery Detection = No (Field)
SSCC 1 : Flash Sync = master (OCCN)
SSCC 1 : Invert Gate Output = No (OCCN)
SSCC 1 : Lamp Neutral Test = Off (Field)
Aux-1 Xng Ctrl Used = No (OCCN)

SSCC:  2
SSCC-2 Activation = AND 1 XR (OCCN)
SSCC-2 Gate Delay = 4 sec (OCCN)
SSCC-2 Number of GPs = 0 (OCCN)
SSCC-2 Number of GDs = 1 (OCCN)
SSCC 2 : Flash Rate = 55 (OCCN)
SSCC 2 : Low Battery Detection = No (Field)
SSCC 2 : Flash Sync = slave (OCCN)
SSCC 2 : Invert Gate Output = No (OCCN)
SSCC 2 : Lamp Neutral Test = Off (Field)
Aux-2 Xng Ctrl Used = No (OCCN)

OUTPUT:  assignment page 1
OUT 1.1 = AND 1 XR (OCCN)
OUT 1.2 = AND 2 (OCCN)
OUT 2.1 = Not Used (OCCN)
OUT 2.2 = Not Used (OCCN)

INPUT:  assignment page 1
IN 1.1 = Not Used (OCCN)
IN 1.2 = Not Used (OCCN)
IN 2.1 = Not Used (OCCN)
IN 2.2 = Not Used (OCCN)

IO:  assignment SSCC
OUT GC 1 = Gate Output 1 (OCCN)
OUT GC 2 = Gate Output 2 (OCCN)
IN 7.1 = AND 1 XR Enable (OCCN)
IN 7.2 = Not Used (OCCN)
IN 7.3 = Not Used (OCCN)
IN 7.4 = Passthru State 1 (OCCN)
IN 7.5 = GP 1.1 (OCCN)
IN 8.1 = Out Of Service IP 1 (OCCN)
IN 8.2 = Not Used (OCCN)
IN 8.3 = Not Used (OCCN)
IN 8.4 = Passthru State 2 (OCCN)
IN 8.5 = Not Used (OCCN)

SEAR
SEAR Subnode = 99   (OCCN)
DI 1 = General1 (OCCN)
DI 2 = Gnd Flt Tester 1 (OCCN)
Rly 1 = Ground Fault Test (OCCN)
Rly 2 = AC Control (OCCN)

SEAR:  Inputs
SP 2.1 = POK 1 (OCCN)
SP 3.1 = Not Used (OCCN)
SP 4.1 = Not Used (OCCN)
SP 5.1 = Not Used (OCCN)
SP 6.1 = Not Used (OCCN)

SEAR:  slot 1-4 Inputs
IN 1.1 = Not Used (OCCN)
IN 1.2 = Not Used (OCCN)
IN 2.1 = Not Used (OCCN)
IN 2.2 = POK 2 (OCCN)
IN 3.1 = Not Used (OCCN)
IN 3.2 = Not Used (OCCN)
IN 4.1 = Not Used (OCCN)
IN 4.2 = Not Used (OCCN)

SEAR:  Inputs slot 5
IN 5.1 = Not Used (OCCN)
IN 5.2 = Not Used (OCCN)

SEAR:  Inputs slot 6
IN 6.1 = Not Used (OCCN)
IN 6.2 = Not Used (OCCN)

SEAR:  slot 7-8 Inputs
IN 7.2 = Not Used (OCCN)
IN 7.3 = TSS 1 (OCCN)
IN 8.2 = Not Used (OCCN)
IN 8.3 = TSS 2 (OCCN)
IN 8.5 = General2 (OCCN)

SITE:  programming
Radio Subnode = 1  (Field)
Field Password = Off (OCCN)
Low Battery Enabled = Off (Field)

Configuration Package File
--------------------------
Filename: cha-140.34.pac
```

TEMPLATE MTF-1D

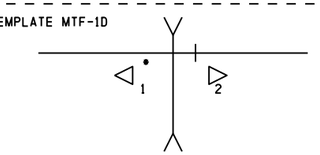

• INDICATES TRACK WITH ISLAND

NOTES

1) DISTANCE(S) TO BE VERIFIED AT INSTALLATION
   INDICATE SELECTED PROGRAMMED VALUE IF DIFFERENT THAN SHOWN
   REFER TO 4000 GCP INSTRUCTION/INSTALLATION MANUAL
   FOR PROGRAMMING PARAMETERS

2) PROGRAM TEXT HIGHLIGHTED IN RED INDICATES 4000 PROGRAM
   MODIFICATIONS TO DEFAULT PROGRAM VALUES

3) EACH CONSTANT WARNING DEVICE SYSTEM TO BE PROGRAMMED TO
   CONVERT TO A MOTION SENSOR 300 FEET FROM EDGE OF ROAD
   TRAVELLED WAY
   SHUNT TRACK 300 FEET FROM EDGE OF ROAD TRAVELLED WAY
   AND NOTE "EZ" VALUE
   PROGRAM EACH SYSTEM WITH THE INDICATED "EZ" VALUE +2

4) VERIFY SET TIMER VALUE TO MATCH ACTUAL TRAIN MOVEMENT
   WITHIN THE CROSSING APPROACH CIRCUITS

SII 28 MAY 2015

PROPOSED
DESIGN NO. 15-0151
RED-IN YELLOW-OUT

AS INSTALLED
DATE _____
BY _____
(PRINT NAME)

PROPOSED D	M	Y	REVISIONS	D	C	COMPLETED D	M	Y	C
			AS-INSTALLED			11	09	15	MZC
28	05	15	ADAMS ST CWT UPGRADE	NAD	MRB				

REGION SOUTHERN
SUB. CHAMPAIGN 341

SIGNALS AND COMMUNICATIONS HOMEWOOD
11 SEPTEMBER 2013
DES. MZC
CH. PJB

GCP 4000
PROGRAM INFORMATION
PESOTUM, IL
400N

CHA-140.34-03

DOT# 289 100F

cha-140.34-03.dgn
24-SEP-2015

SIEMENS INDUSTRY INC			
DES.: NAD	DATE: 28/05/15	JOB NO.: PICA10588	
CKD.: MRB	ISSUE DATE: N/A	EST. NO.: XP-7839	
DRN.: NAD	PLAN NO.: N/A	SHEET 3 OF 17	
P TIME: 09:17	P DATE: $$PLOT_DATE	CAD ID.: CHA-140.34-03	

SIEMENS INDUSTRY INC
LOUISVILLE DIVISION, LOUISVILLE, KY

TO CONFIGURE SEARII & SEARIII PRESS SITE SETUP KEY. USE ARROW KEYS TO MAKE SELECTION, PRESS ENTER AFTER SELECTION HAS BEEN MADE.

STAGE 1

PROGRAM MENU QUESTIONS	PROGRAM	OPTIONS/RANGE
DATE/TIME?	CURRENT DATE/TIME	CURRENT DATE/TIME
AUTOMATIC DST ADJUSTMENT?	NO	YES, NO
TIME ZONE?	CENTRAL	EASTERN, CENTRAL, MOUNTAIN, PACIFIC, ALASKA, HAWAII, ATLANTIC, SASKATCHEWAN, NEW FOUNLAND
SITE NAME?	400N	STREET NAME
MILE POST?	140.34	MILEAGE
DOT/CROSSING IS #?	289 100F	
TESTER TYPE?	CROSSING	CROSSING, WAYSIDE
DATE FORMAT?	mm-dd-yyyy	mm-dd-yyyy, dd-mm-yyyy
TEMPERATURE FORMAT?	FAHRENHEIT	FAHRENHEIT, CELSIUS
SITE TYPE?	NO COM	NO COM, BULLHORN, DIALUP, NODE, COLLECTOR
SITE ATCS ADDRESS?		7.RRR.LLL.GGG.99.01
OFFICE ATCS ADDRESS?		2.RRR.NN.DDDD
(FOR NODE USE) PRIMARY HOP ADDR?		7.RRR.LLL.GGG.00.01
(FOR NODE USE) BACKUP HOP ADDR1?		7.RRR.LLL.GGG.00.01
(FOR NODE USE) BACKUP HOP ADDR2?		7.RRR.LLL.GGG.00.01
(FOR COLLECTOR USE) POLL ID?		1-99
(FOR COLLECTOR USE) MODE?		GEN/ATCS, GENISYS
(FOR COLLECTOR USE) WAMS/XID?		ENABLED, DISABLE
(FOR COLLECTOR USE) OFFICE COMM. DEVICE?		DIRECT (RS232) MCM (RS232) MCM (ECHELON) SREAD SPEC (ECHELON) DIAL MODEM (RS232) S200 RADIO (RS422)
(FOR COLLECTOR USE) OFFICE PHONE NUMBER?		PHONE NUMBER OF WAMS
(FOR COLLECTOR USE) INIT STRING?		OPTIONAL HAYES MODEM INITIALIZATION STRING
FIELD COMM. DEVICE?		VHF COMM. (ECHELON) VHF COMM. (RS232) SPREAD SPEC (ECHELON) SPREAD SPEC (RS232)
USER PORT?	57600,8,N,1,N	BAUD, DATA BITS, PARITY, STOP BITS, FLOW CONTROL
AUX PORT?	9600,8,N,1,N	BAUD, DATA BITS, PARITY, STOP BITS, FLOW CONTROL

YOU WILL NOW SEE A MESSAGE "PLEASE WAIT COMPILING STAGE 1"
CONTINUE TO NEXT PROGRAM MENU QUESTIONS.

STAGE 2

QUESTION	PROGRAM	SELECTION 1 (MINIMUM)	SELECTION 2 (MAXIMUM)	CONDITION FOR MENU DISPLAY
RESET NAMES / MODULES ?	NO	YES	NO	ALWAYS
RAILROAD NUMBER ?	360 (IC)	1	999	ALWAYS
CROSSING CONFIGURATION	NORMAL	NORMAL	SPLIT GATE (NOTE 2)	ALWAYS
ENTRANCE GATES ?	2	0	8	ALWAYS
GATE POSTION FAIL TIME (SECONDS) ?	11	10	60	GATES > 0
BATTERY BANKS ?	2	1	3	ALWAYS
BATT MON USED ?	NO	NO	YES	ALWAYS
INTERNAL CROSSING CONTROLLERS ?	2	0	2	ALWAYS
EXTERNAL CROSSING CONTROLLERS ?	0	0	2	CROSSING CONTROLLER = YES
VHF COMMUNICATOR ?	YES	YES	NO	ALWAYS
DTMF ACTIVATION?	YES	NO	YES	RAILROAD = 360 (IC)
ACTIVATION CODE ?	100	1	999	VHF COMMUNICATOR = YES
ACTIVATION TIMEOUT ?	180	1	600	VHF COMMUNICATOR = YES
ILOD MODULES ?	2	0	4	ALWAYS
ANY LED BULBS USED ?	YES	NO	YES	ILOD MODULES > 0
AUTO INSPECTION ?	NO	YES	NO	ALWAYS
BELL SENSORS ?	1	0	8	ALWAYS
BELL SENSORS TSS1 ?	NO	NO	YES	BELL SENSORS > 0
BELL SENSORS TSS2 ?	YES	NO	YES	BELL SENSORS > 0
BELL SENSORS TSS3 ?	N/A	NO	YES	BELL SENSORS > 0
BELL SENSORS TSS4 ?	N/A	NO	YES	BELL SENSORS > 0
BELL SENSORS TSS5 ?	N/A	NO	YES	BELL SENSORS > 0
BELL SENSORS TSS6 ?	N/A	NO	YES	BELL SENSORS > 0
BELL SENSORS TSS7 ?	N/A	NO	YES	BELL SENSORS > 0
BELL SENSORS TSS8 ?	N/A	NO	YES	BELL SENSORS > 0
BELL ON ?	GATES LOWERING	GATES LOWERING	GATES MOVING	BELL SENSORS > 0
GFT'S ?	YES	YES	NO	ALWAYS
BATTERIES ON GFT1 ?	2	1	2	GFT'S = YES
GATE TIP SENSORS ?	YES	YES	NO	GATES > 0
RTU ?	YES	NO	YES	ALWAYS
VHF VOICE CHANNEL ?	1 (NOTE 1)	1	8	VHF COMMUNICATOR = YES
VHF DATA CHANNEL ?	1 (NOTE 1)	1	8	VHF COMMUNICATOR = YES
USE CELL MODEM NON-CRITICAL FEATURE ?	NO	NO	YES	ALWAYS
FULL APPROACH MOVE ALARMS ?	ACTIVATE	ACTIVATE	DO NOT ACTIVATE	ALWAYS

YOU WILL NOW SEE A MESSAGE "PLEASE WAIT COMPILING STAGE 2"
CONTINUE TO NEXT PROGRAM MENU QUESTIONS.

STAGE 3

PROGRAM MENU QUESTIONS	PROGRAM
EDIT DIGITAL INPUTS	NO
EDIT BATTERIES	NO
EDIT RELAYS	NO
EDIT TEST LEDS	NO
EDIT ILOD SENSORS	NO
EDIT VHF SETTINGS	NO
GCP4K ATCS SUBNODE?	16

SAVE CONFIGURATION

NOTES

1) INDICATE SELECTION IN SPACE PROVIDED.
2) ADDITIONAL OPTIONS: DUAL CROSSING, EXTERNAL ENTRANCE GATE CONTROLLERS.

SEARII EXECUTIVE 9V725 REV. A01U, SEARII APPLICATION 9V864 REV. A01J

PROPOSED D	PROPOSED M	PROPOSED Y	REVISIONS	D	C	COMPLETED D	COMPLETED M	COMPLETED Y	C
			AS INSTALLED			02	10	12	LSS

REGION SOUTHERN
SUB. CHAMPAIGN 341

SIGNALS AND COMMUNICATIONS HOMEWOOD
DES. TMF
19 AUGUST 2011
CH. BJW

GCP 4000/SEAR III
SETUP & PROGRAM
PESOTUM, IL
400N

CHA-140.34-04

DOT# 289 100F

cha-140.34-04.dgn
24-SEP-2015

INVENSYS RAIL CORP.
LOUISVILLE DIVISION, LOUISVILLE, KY

GCP 4000
CALIBRATION HISTORY

INITIAL SET UP BY: _____ DATE: _____

		APPROACH DISTANCE CALIBRATION										LINEARIZATION CALIBRATION	
		EZ/EX VALUES (TRACK UNOCCUPIED)				HARD WIRE SHUNT AT TERMINATION SHUNT				COMPUTED APPROACH DISTANCE		LINEARIZATION STEP VALUE	
		EZ		EX		EZ		EX					
		NRML	STBY	NRML	STBY	NRML	STBY	NRML	STBY	NRML	STBY	NRML	STBY
NORTH	TRACK 1												
SOUTH	TRACK 1	N/A	N/A	N/A	N/A	N/A	N/A	N/A	N/A	N/A	N/A	N/A	N/A
NORTH	TRACK 2	N/A	N/A	N/A	N/A	N/A	N/A	N/A	N/A	N/A	N/A	N/A	N/A
SOUTH	TRACK 2												

GCP 4000
CALIBRATION HISTORY

INITIAL SET UP BY: _____ DATE: _____

		APPROACH DISTANCE CALIBRATION										LINEARIZATION CALIBRATION	
		EZ/EX VALUES (TRACK UNOCCUPIED)				HARD WIRE SHUNT AT TERMINATION SHUNT				COMPUTED APPROACH DISTANCE		LINEARIZATION STEP VALUE	
		EZ		EX		EZ		EX					
		NRML	STBY	NRML	STBY	NRML	STBY	NRML	STBY	NRML	STBY	NRML	STBY
NORTH	TRACK 1												
SOUTH	TRACK 1	N/A	N/A	N/A	N/A	N/A	N/A	N/A	N/A	N/A	N/A	N/A	N/A
NORTH	TRACK 2	N/A	N/A	N/A	N/A	N/A	N/A	N/A	N/A	N/A	N/A	N/A	N/A
SOUTH	TRACK 2												

GCP 4000
CALIBRATION HISTORY

INITIAL SET UP BY: _____ DATE: _____

		APPROACH DISTANCE CALIBRATION										LINEARIZATION CALIBRATION	
		EZ/EX VALUES (TRACK UNOCCUPIED)				HARD WIRE SHUNT AT TERMINATION SHUNT				COMPUTED APPROACH DISTANCE		LINEARIZATION STEP VALUE	
		EZ		EX		EZ		EX					
		NRML	STBY	NRML	STBY	NRML	STBY	NRML	STBY	NRML	STBY	NRML	STBY
NORTH	TRACK 1												
SOUTH	TRACK 1	N/A	N/A	N/A	N/A	N/A	N/A	N/A	N/A	N/A	N/A	N/A	N/A
NORTH	TRACK 2	N/A	N/A	N/A	N/A	N/A	N/A	N/A	N/A	N/A	N/A	N/A	N/A
SOUTH	TRACK 2												

PROPOSED D	M	Y	REVISIONS	D	C	COMPLETED D	M	Y	C
			AS INSTALLED			02	10	12	LSS
11	09	13	ADD EC5 REPEATER	MZC	PJB	11	09	15	MZC

REGION SOUTHERN
SUB. CHAMPAIGN 341

SIGNALS AND COMMUNICATIONS HOMEWOOD
DES. TMF
19 AUGUST 2011
CH. BJW

GCP 4000
CALIBRATION HISTORY
PESOTUM, IL
400N

CHA-140.34-05

DOT# 289 100F

cha-140.34-05.dgn
24-SEP-2015

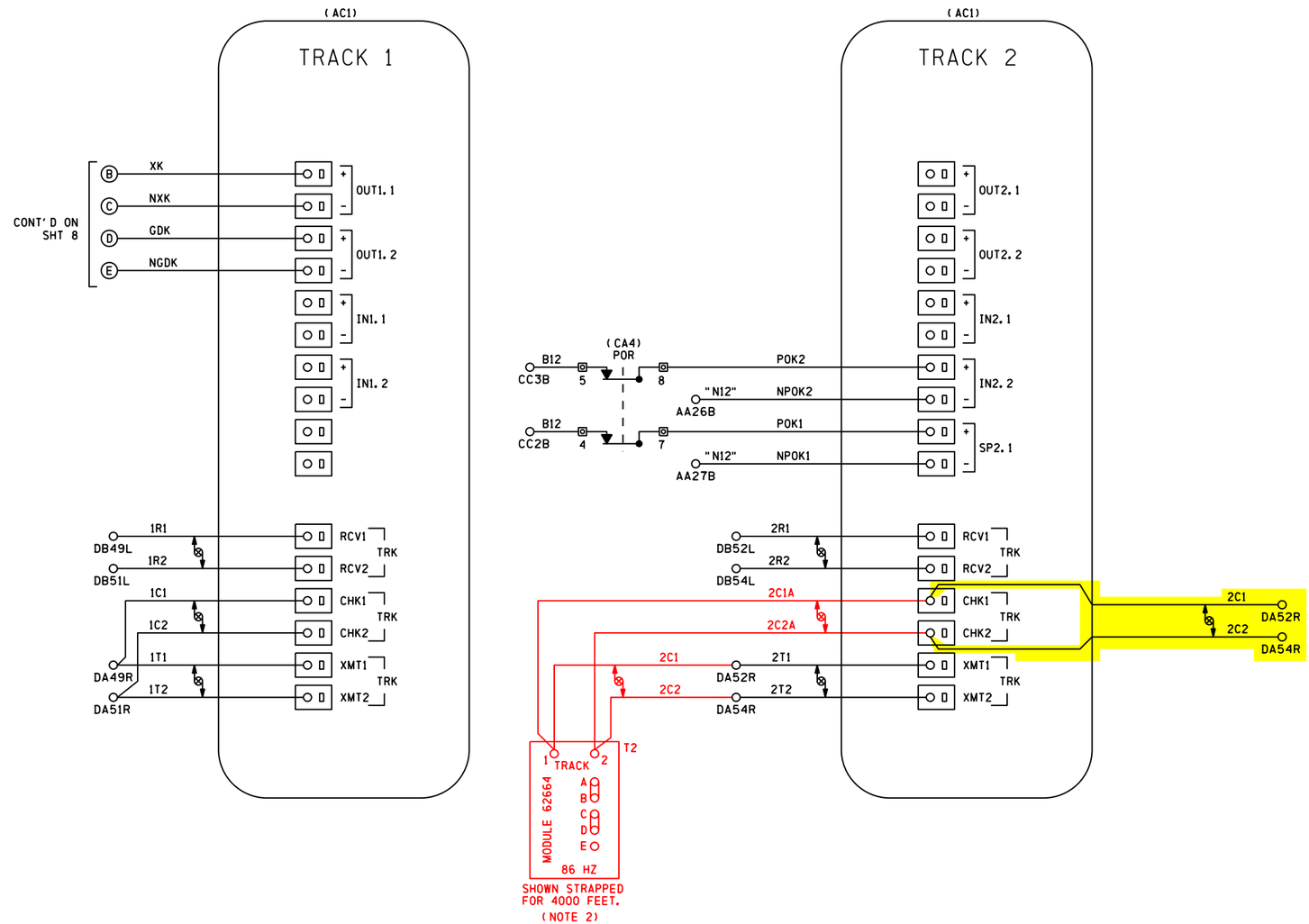

NOTES

1) ALL WIRING #16 AWG UNLESS OTHERWISE NOTED

2) SET BI-DIRECTIONAL SIMULATOR COUPLER TO THE SAME LENGTH OR SLIGHTLY LONGER (BUT NOT EXCEEDING 10%) OF THE ACTUAL APPROACH CIRCUIT LENGTH. (REFER TO MODEL 4000 GCP INSTRUCTION/INSTALLATION MANUAL)

DENOTES TWISTED PAIR

" " DENOTES REFERENCE, NOT WIRE TAG

SII 28 MAY 2015

PROPOSED
DESIGN NO. 15-0151
RED-IN YELLOW-OUT

AS INSTALLED
DATE
BY
(PRINT NAME)

PROPOSED D	PROPOSED M	PROPOSED Y	REVISIONS	D	C	COMPLETED D	COMPLETED M	COMPLETED Y	C
			AS INSTALLED			02	10	12	LSS
11	09	13	ADD EC5 REPEATER	MZC	PJB	11	09	15	MZC
28	05	15	ADAMS ST CWT UPGRADE	NAD	MRB				

REGION SOUTHERN
SUB. CHAMPAIGN 341
CN

SIGNALS AND COMMUNICATIONS HOMEWOOD
19 AUGUST 2011
DES. TMF
CH. BJW

GCP 4000
TRACK 1 & 2 MODULE CONNECTIONS
PESOTUM, IL
400N

CHA-140.34-06

DOT# 289 100F

REVISIONS			
NO.	DATE	BY	DESCRIPTION	APP. BY
1				
2				
3				
4				
5				

cha-140.34-06.dgn
24-SEP-2015

SIEMENS INDUSTRY INC

DES.: NAD	DATE: 28/05/15	JOB NO.: PICA10588	
CKD.: MRB	ISSUE DATE: N/A	EST. NO.: XP-7839	
DRN.: NAD	PLAN NO.: N/A	SHEET 6 OF 17	
P TIME: 09:17	P DATE: $$PLOT_DATE	CAD ID.: CHA-140.34-06	

SIEMENS INDUSTRY INC
LOUISVILLE DIVISION, LOUISVILLE, KY

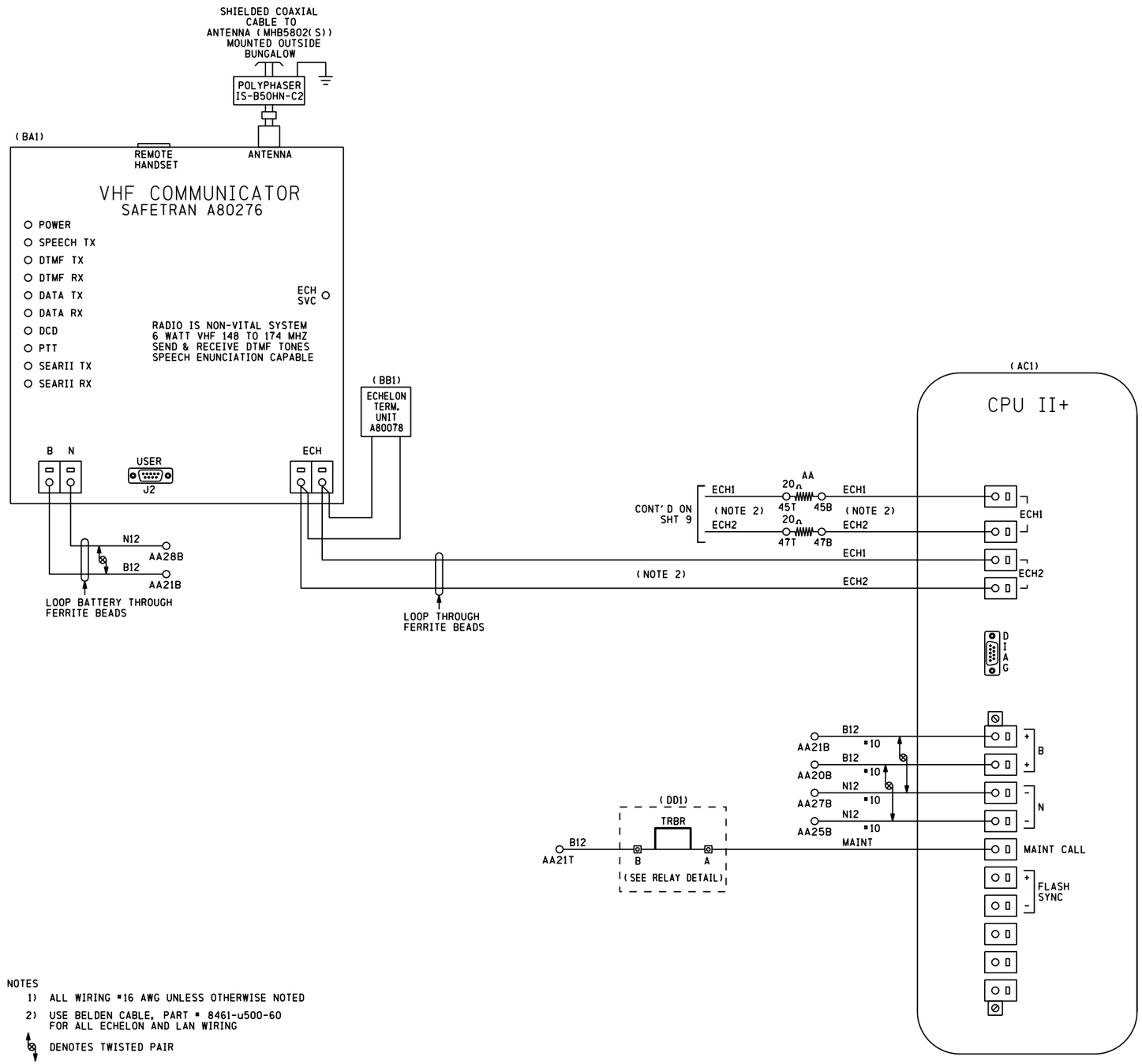

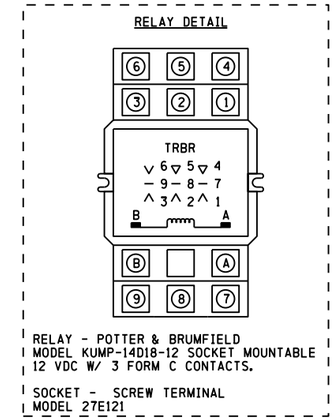

cha-140.34-07.dgn
24-SEP-2015

NOTES
1) ALL WIRING #16 AWG UNLESS OTHERWISE NOTED
2) USE BELDEN CABLE, PART # 8461-u500-60 FOR ALL ECHELON AND LAN WIRING

DENOTES TWISTED PAIR

PROPOSED D	M	Y	REVISIONS	D	C	COMPLETED D	M	Y	C
			AS INSTALLED			02	10	12	LSS

REGION SOUTHERN
SUB. CHAMPAIGN 341

SIGNALS AND COMMUNICATIONS HOMEWOOD
19 AUGUST 2011
DES. TMF
CH. BJW

GCP 4000
CPUII+ & VHF COMMUNICATOR
PESOTUM, IL
400N

CHA-140.34-07

DOT# 289 100F

INVENSYS RAIL CORP.
LOUISVILLE DIVISION, LOUISVILLE, KY

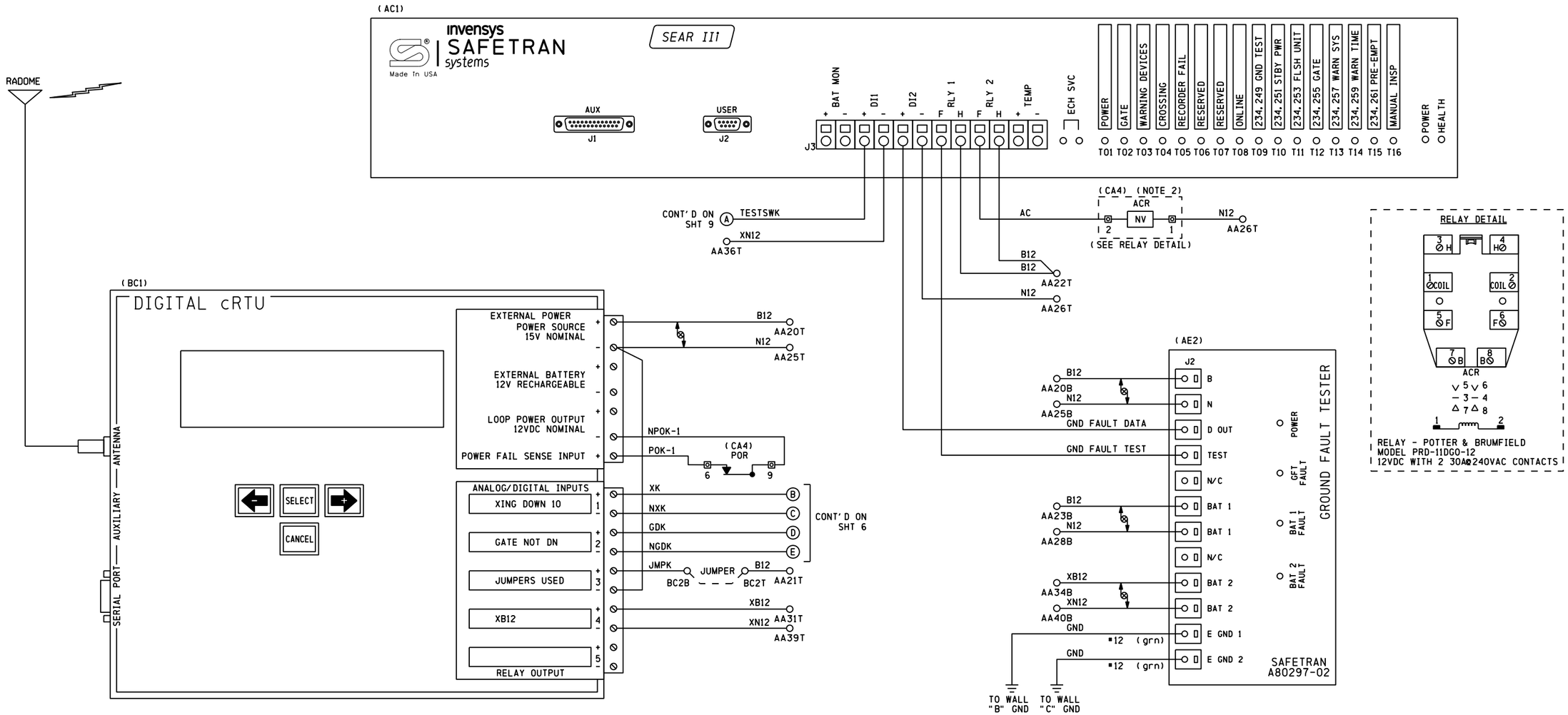

CONFIGKEY:	30
MODEL:	C06C/2ANA V2.3
SERIAL #:	03-21422-5111
SITE IDENTIFIER:	DOT# 289 037R

	LOW ALARM	RETURN	HIGH ALARM	RETURN
B12	11.6	12.6	15.6	14.6
XB12	13.8	14.8	17.8	16.8

NOTES
1) ALL WIRING #16 AWG UNLESS OTHERWISE NOTED
2) PART OF SEARIII POWER CONTROL AND INDICATION RELAY JUNCTION BOX

⊗ DENOTES TWISTED PAIR

PROPOSED D	M	Y	REVISIONS	D	C	COMPLETED D	M	Y	C
			AS INSTALLED			02	10	12	LSS

REGION SOUTHERN
SUB. CHAMPAIGN 341
CN

SIGNALS AND COMMUNICATIONS HOMEWOOD
DES. TMF
19 AUGUST 2011
CH. BJW

GCP 4000
SEAR III WITH GFT
PESOTUM, IL
400N

CHA-140.34-08

DOT# 289 100F

INVENSYS RAIL CORP.
LOUISVILLE DIVISION, LOUISVILLE, KY

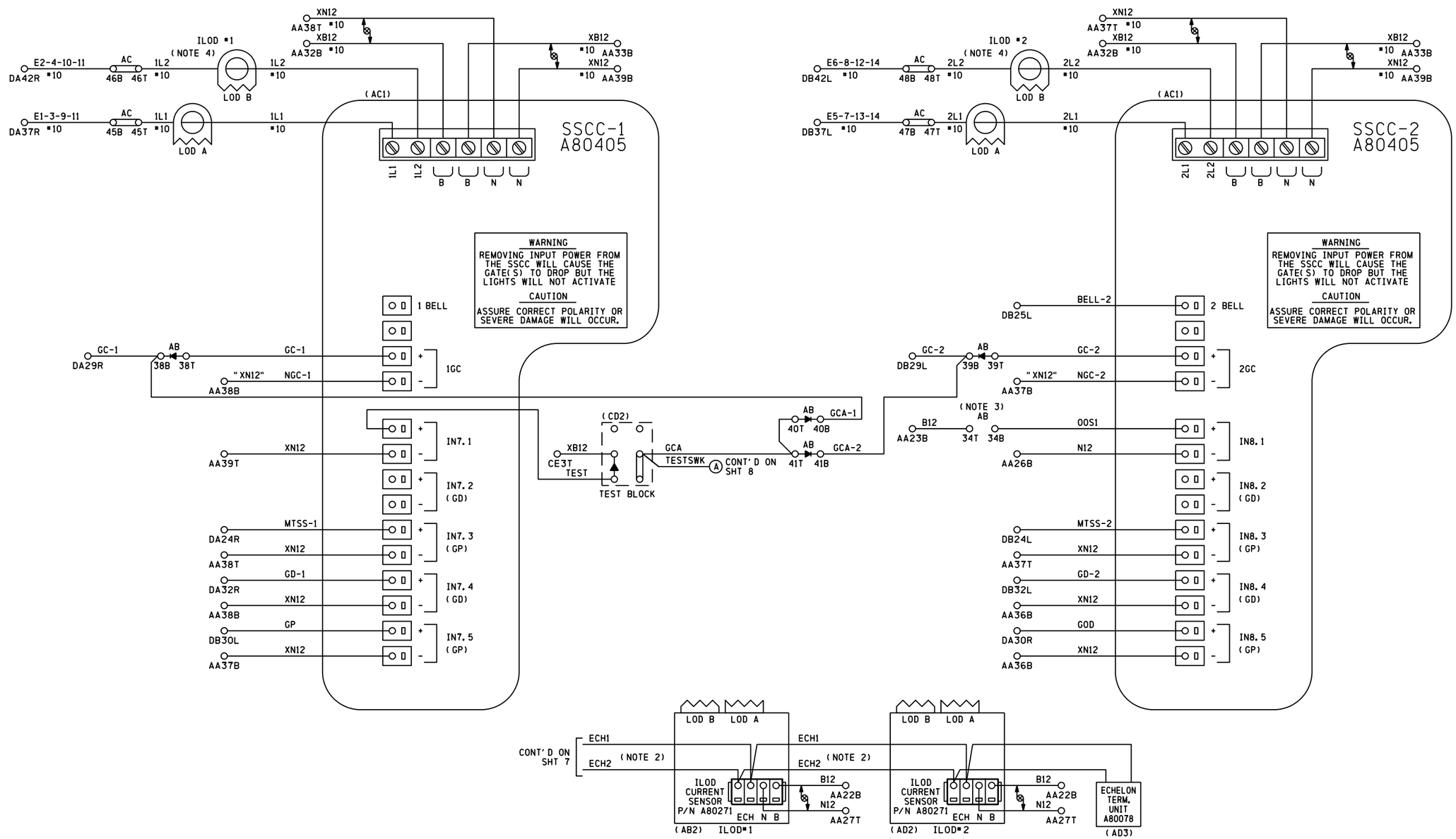

NOTES

1) ALL WIRING TO BE #16 AWG UNLESS OTHERWISE NOTED
2) USE BELDEN CABLE, PART # 8461-u500-60 FOR ALL ECHELON AND LAN WIRING
3) TO TAKE TRACK 1 (T1) OUT OF SERVICE, JUMPER AB34T TO AB34B
4) LOOP WIRE THROUGH LOD TWO (2) TIMES

DENOTES RECTIFIER, SAFETRAN PART # 8002A299006

DENOTES TWISTED PAIR

" " DENOTES REFERENCE, NOT WIRE TAG

PROPOSED D	M	Y	REVISIONS	D	C	COMPLETED D	M	Y	C
			AS INSTALLED			02	10	12	LSS

REGION SOUTHERN
SUB. CHAMPAIGN 341

SIGNALS AND COMMUNICATIONS HOMEWOOD
19 AUGUST 2011
DES. TMF
CH. BJW

GCP 4000/SSCCIIII
GATE CONTROLLERS W/ ILODS
PESOTUM, IL
400N

CHA-140. 34-09

DOT# 289 100F

INVENSYS RAIL CORP.
LOUISVILLE DIVISION, LOUISVILLE, KY

cha-140. 34-09. dgn
24-SEP-2015

CONTACT	CLOSED AT	FUNCTION
6	70° -90°	POWER DOWN CONTROL
7	0° -89°	POWER UP CONTROL
8	83° -90°	FLASHING LGT. CONTROL
9	5° -90°	BELL CONTROL
10	0° -5°	GATE DOWN INDICATION
11	N/A	SPARE
12	N/A	SPARE

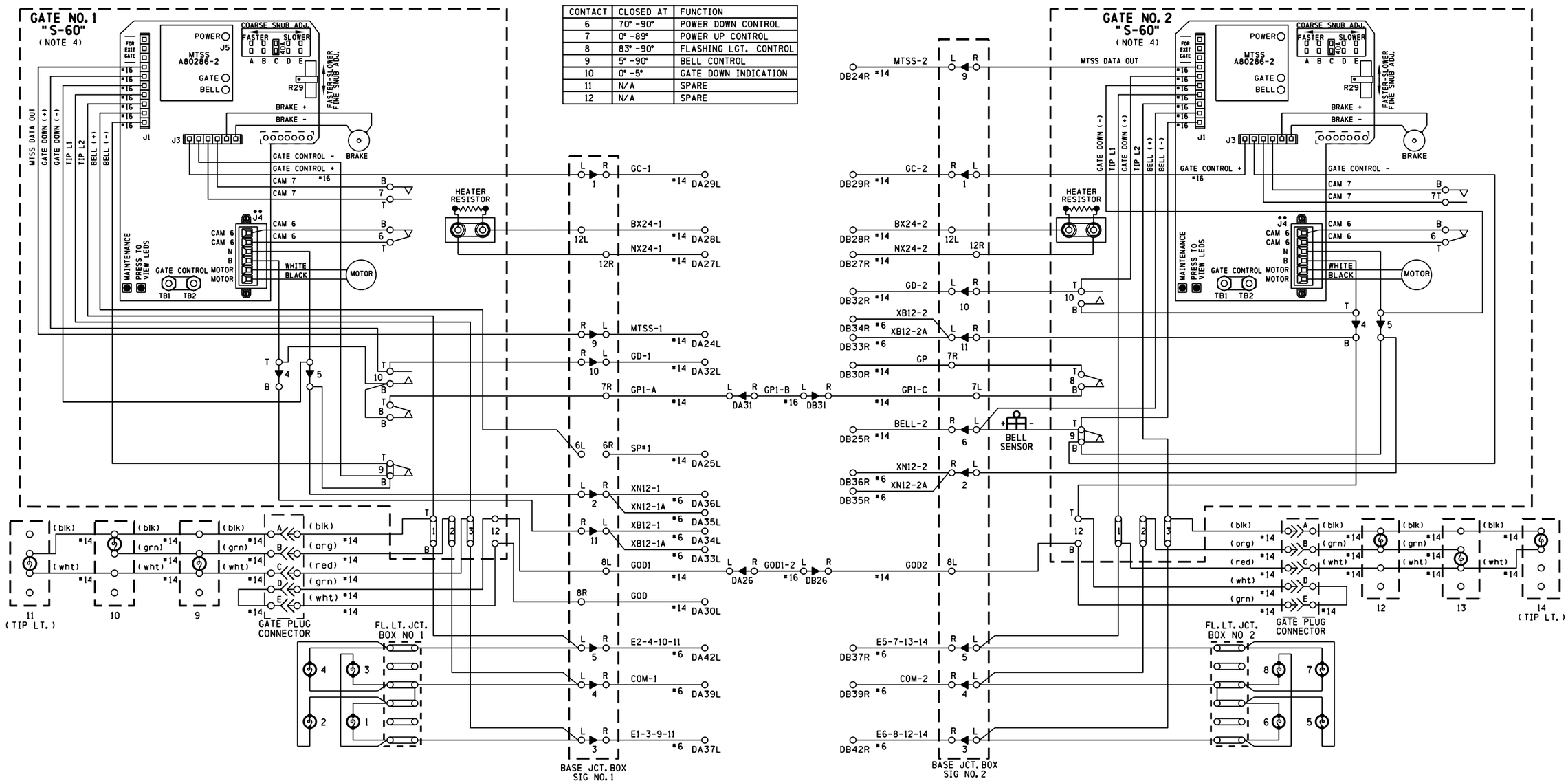

NOTES

1) ON GATE No. 1 ADD JUMPER BETWEEN TERMINALS:
   ADD JUMPER BETWEEN TERMINAL 4T & 10B,
   ADD JUMPER BETWEEN TERMINAL 8B & 10B,
   AND ADD JUMPER BETWEEN TERMINAL 5B & 9B

2) ON GATE No. 2 ADD JUMPER BETWEEN TERMINALS:
   ADD JUMPER BETWEEN TERMINAL 4T &10B,
   ADD JUMPER BETWEEN TERMINAL 5B & 9B,
   AND ADD JUMPER BETWEEN TERMINAL 4B & 12T

3) ALL WIRING #10 AWG UNLESS OTHERWISE NOTED

4) GATE DESCENT TIME (RELEASE FROM VERTICAL TO FULLY HORIZONTAL) TO BE WITHIN 11 SECONDS

5) BELL CUT-OUT (5°-90°) WHEN REQUIRED REMOVE STRAP BETWEEN 9B AND 9T

6) ENSURE ALL TERMINALS HAVE TWO SHOULDER NUTS

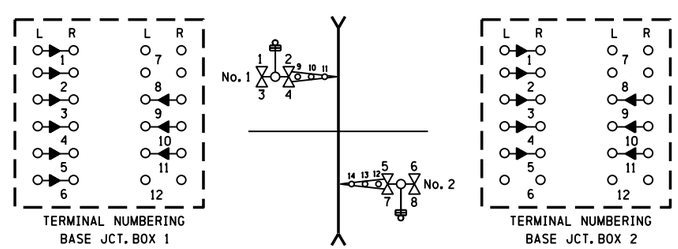

PROPOSED D	M	Y	REVISIONS	D	C	COMPLETED D	M	Y	C
			AS INSTALLED			02	10	12	LSS

REGION SOUTHERN
SUB. CHAMPAIGN 341

SIGNALS AND COMMUNICATIONS HOMEWOOD
DES. TMF
19 AUGUST 2011
CH. BJW

GATE 1 & 2 MECH. CONTROL CIRCUITS
SAFETRAN S-60
PESOTUM, IL

400N

CHA-140. 34-10

DOT# 289 100F

INVENSYS RAIL CORP.
LOUISVILLE DIVISION, LOUISVILLE, KY

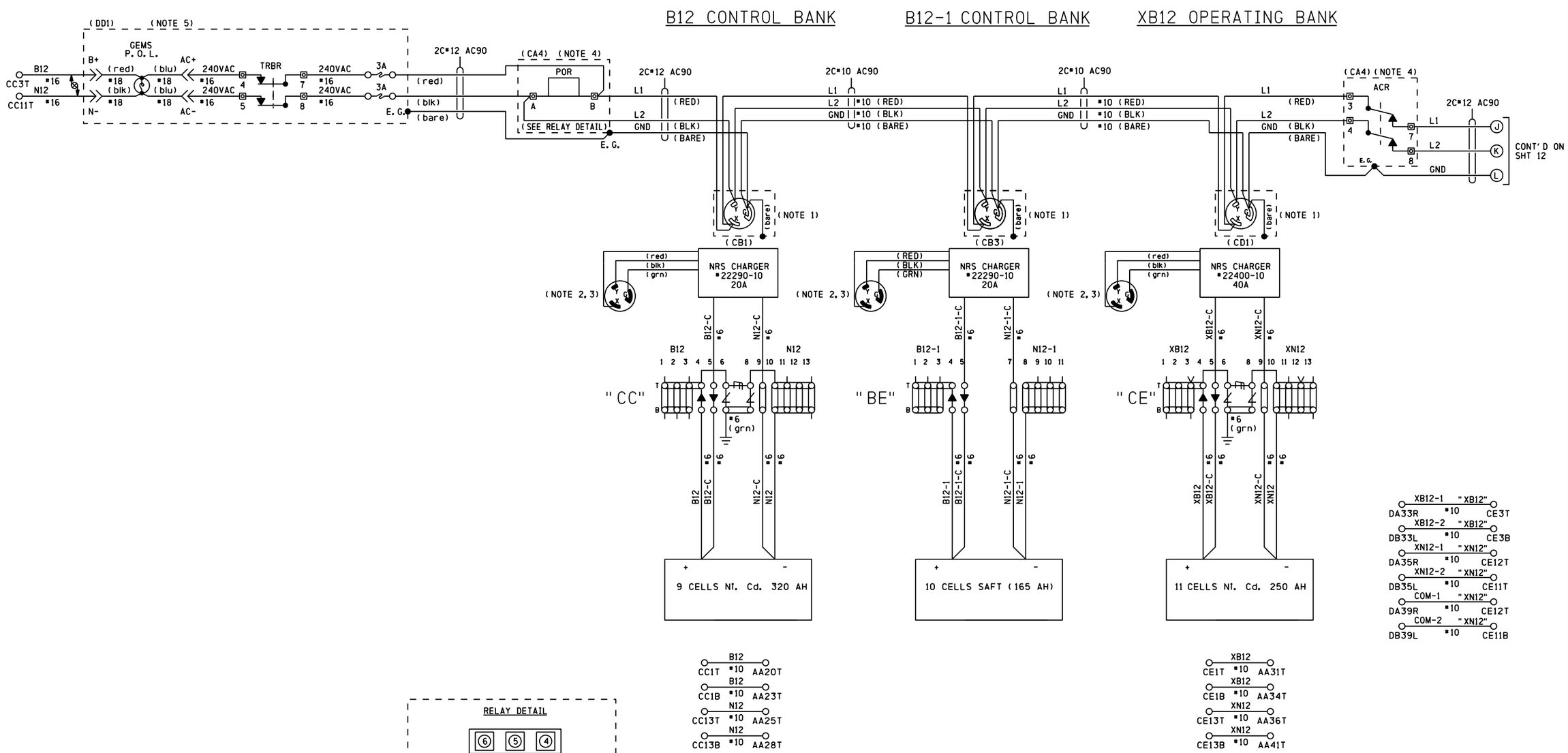

RELAY DETAIL

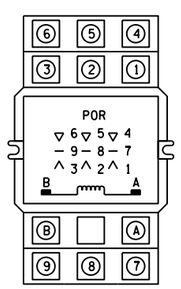

RELAY - POTTER & BRUMFIELD
MODEL KUP-14A15-240 SOCKET MOUNTABLE
240 VAC W/ 3 FORM C CONTACTS

SOCKET - SCREW TERMINAL
MODEL 27E121

NOTES

1) 20A 250V TEST LOCK RECEPTACLE HUBBELL HBL 2320
2) PLUG HUBBELL HBL 2321 REFER TO PS-902 PAGE 6
3) GROUND LUG LOCATED ON CHARGER HOUSING
4) PART OF SEARII POWER CONTROL AND INDICATION RELAY JUNCTION BOX
5) PART OF POWER OFF INDICATOR LIGHT REPEATER RELAY JUNCTION BOX (REFER TO PS-907 SHT 2A)

<< DENOTES WAGO TERMINAL

DENOTES TWISTED PAIR

PROPOSED D	M	Y	REVISIONS	D	C	COMPLETED D	M	Y	C
			AS INSTALLED			02	10	12	LSS
11	09	13	ADD EC5 REPEATER	MZC	PJB	11	09	15	MZC

REGION SOUTHERN
SUB. CHAMPAIGN 341

SIGNALS AND COMMUNICATIONS HOMEWOOD
19 AUGUST 2011
DES. TMF
CH. BJW

DC DISTRIBUTION

PESOTUM, IL
400N

CHA-140. 34-11

DOT# 289 100F

cha-140. 34-11. dgn
24-SEP-2015

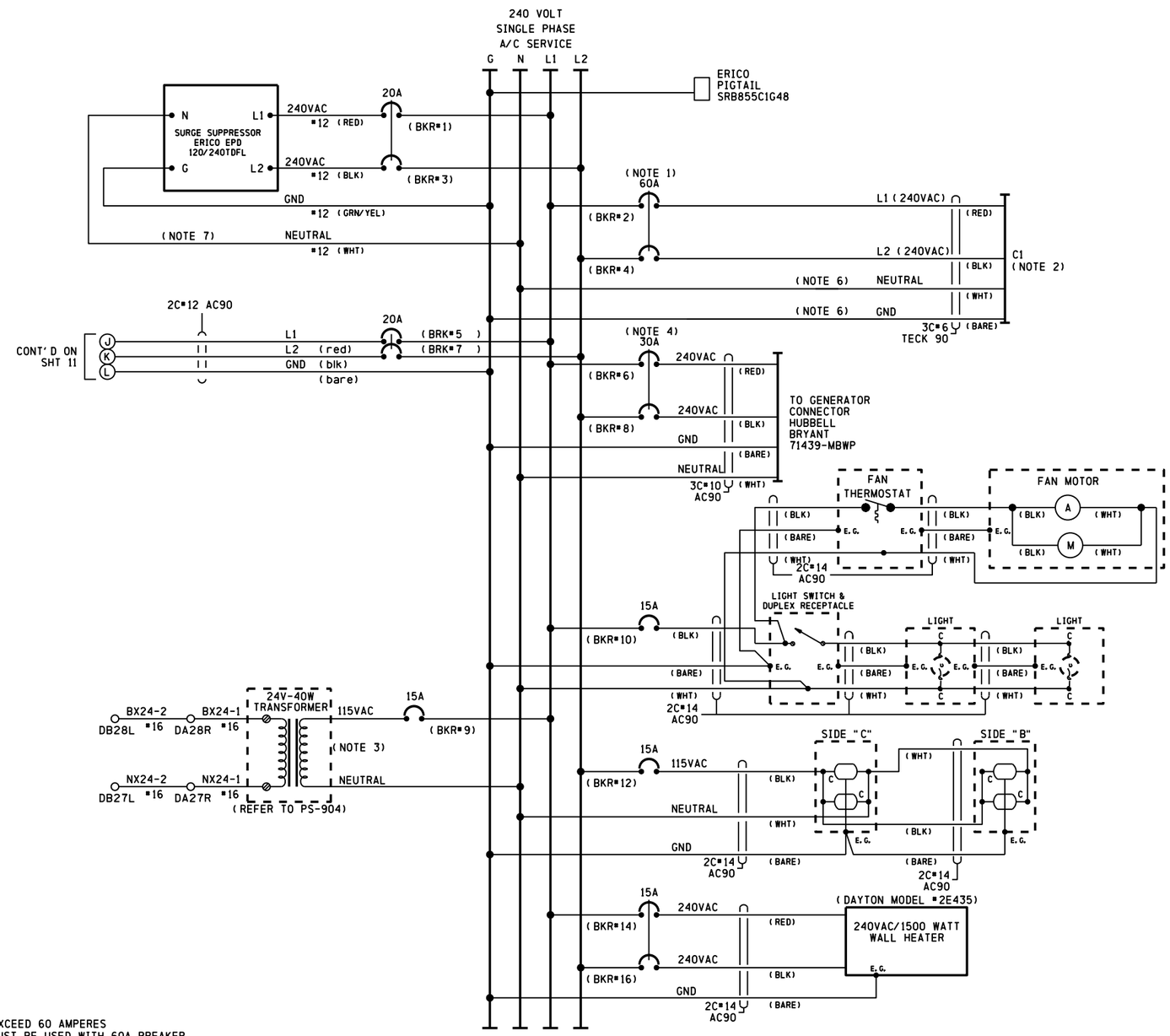

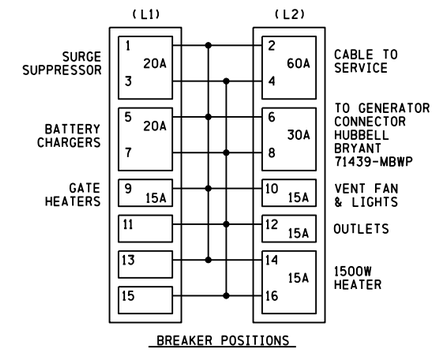

cha-140.34-12.dgn
24-SEP-2015

NOTES

1) CIRCUIT BREAKER NOT TO EXCEED 60 AMPERES
RETAINING KIT PK4MB2LA MUST BE USED WITH 60A BREAKER
2) FEEDER CIRCUIT BREAKER, AT STUB POLE SERVICE
PANEL, NOT TO EXCEED 60 AMPERES
3) 24 VOLT - 40 WATT TRANSFORMER (CN STOCK #02-45-367)
4) A SWITCH TRANSFER KIT MUST BE INSTALLED BETWEEN
THE SERVICE DISCONNECT BREAKER AND THE GENERATOR HOOK UP
5) WHERE SEPARATE GROUND WIRE EXISTS BETWEEN THE SERVICE AND THE
LOAD CENTER, REMOVE THE BRASS COLORED BONDING SCREW
(REFER TO SCHEMATIC ON BOX COVER FOR EXACT LOCATION)
6) S.C.#6 STRANDED, CSA TYPE R90 (X-LINK)
7) KEEP LEADS AS SHORT AS POSSIBLE

PROPOSED D	M	Y	REVISIONS	D	C	COMPLETED D	M	Y	C
			AS INSTALLED			02	10	12	LSS

REGION SOUTHERN
SUB. CHAMPAIGN 341

SIGNALS AND COMMUNICATIONS HOMEWOOD
19 AUGUST 2011
DES. TMF
CH. BJW

AC DISTRIBUTION
PESOTUM, IL
400N

CHA-140.34-12

DOT# 289 100F

INVENSYS RAIL CORP.
LOUISVILLE DIVISION, LOUISVILLE, KY

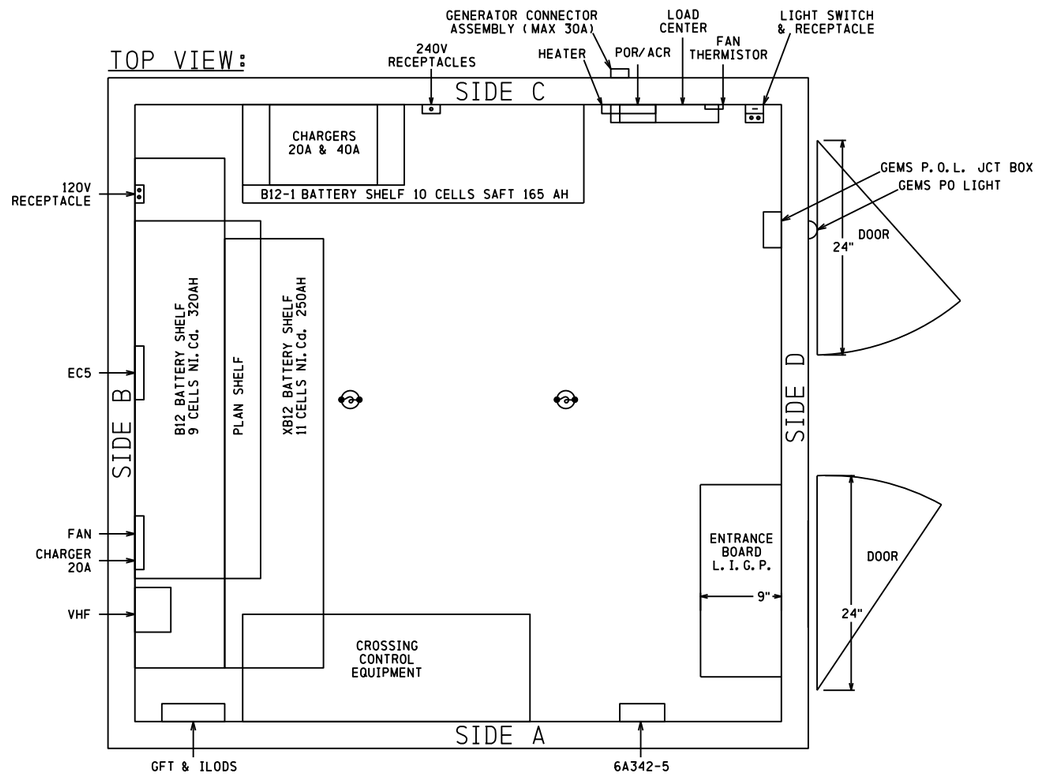

PROPOSED D	M	Y	REVISIONS	D	C	COMPLETED D	M	Y	C
			AS INSTALLED			02	10	12	LSS
11	09	13	ADD EC5 REPEATER	MZC	PJB	11	09	15	MZC

REGION SOUTHERN
SUB. CHAMPAIGN 341

SIGNALS AND COMMUNICATIONS HOMEWOOD
DES. TMF
19 AUGUST 2011
CH. BJW

BUNGALOW LAYOUT TOP VIEW

PESOTUM, IL
400N

CHA-140.34-13

DOT# 289 100F

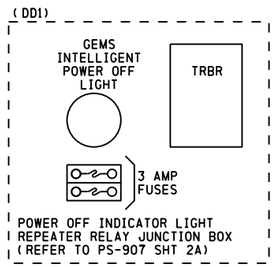

SIDE VIEW: SIDE D

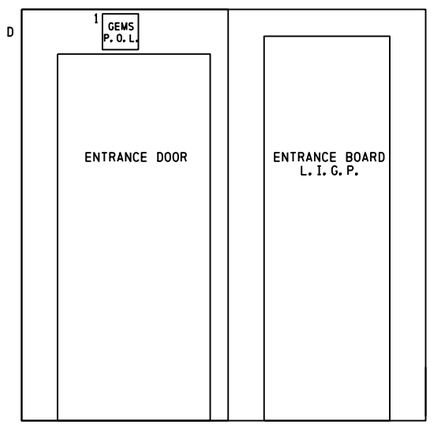

ENTRANCE BOARD L.I.G.P.

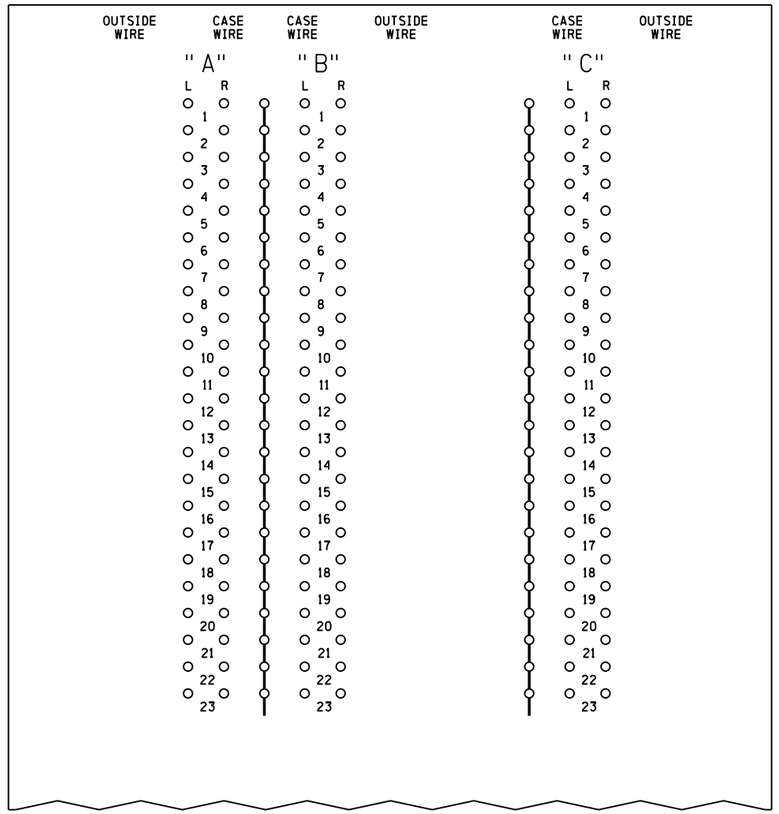

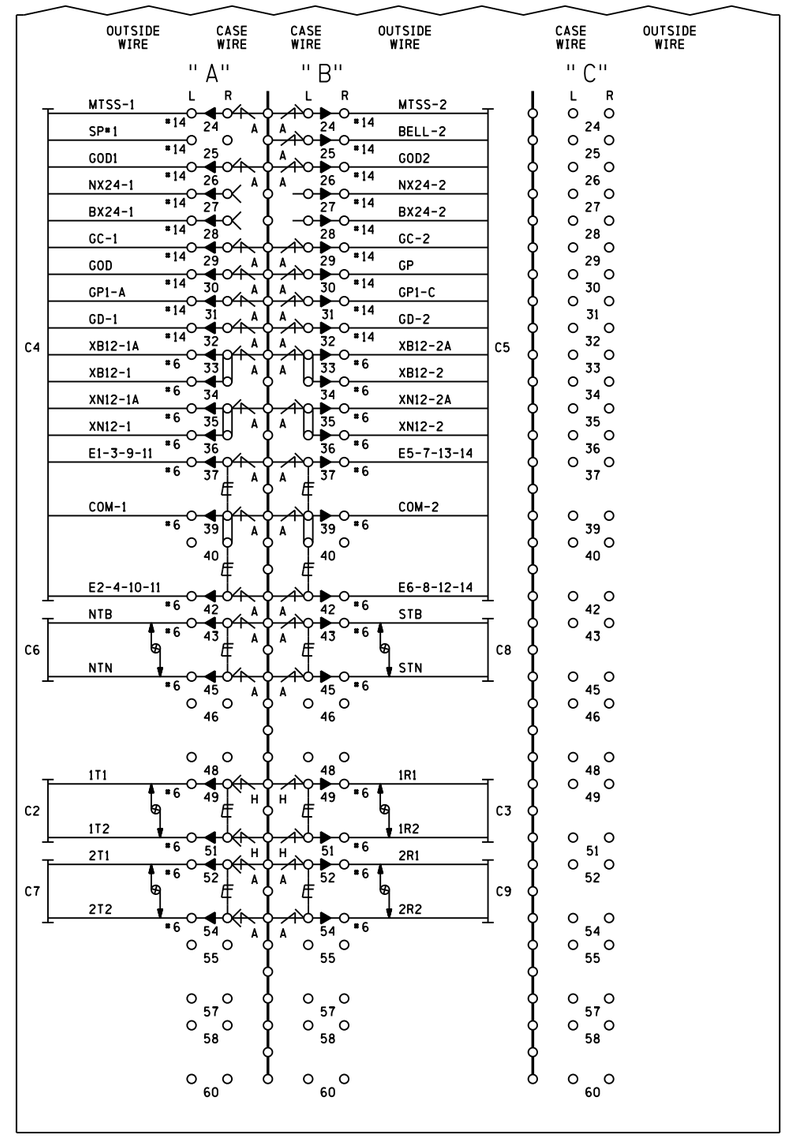

NOTES

- DENOTES HD EQUALIZER CN# 02-32-391 SAFETRAN # 022700-1X
- A — "A" DENOTES AIR GAP ARRESTOR CN# 02-25-168 SAFETRAN # 022485-28X
- H — "H" DENOTES HD AIR GAP ARRESTOR CN# 02-25-006 SAFETRAN # 022585-1X
- DENOTES GROUND PLANE
- DENOTES TWISTED PAIR

PROPOSED D	PROPOSED M	PROPOSED Y	REVISIONS	D	C	COMPLETED D	COMPLETED M	COMPLETED Y	C
			AS INSTALLED			02	10	12	LSS
11	09	13	ADD EC5 REPEATER	MZC	PJB	11	09	15	MZC

REGION SOUTHERN
SUB. CHAMPAIGN 341

SIGNALS AND COMMUNICATIONS HOMEWOOD
19 AUGUST 2011
DES. TMF
CH. BJW

BUNGALOW LAYOUT SIDE D
& L.I.G.P.
PESOTUM, IL
400N

CHA-140. 34-14

DOT# 289 100F

cha-140. 34-14. dgn
24-SEP-2015

REVISIONS				
NO.	DATE	BY	DESCRIPTION	APP. BY
1				
2				
3				
4				
5				

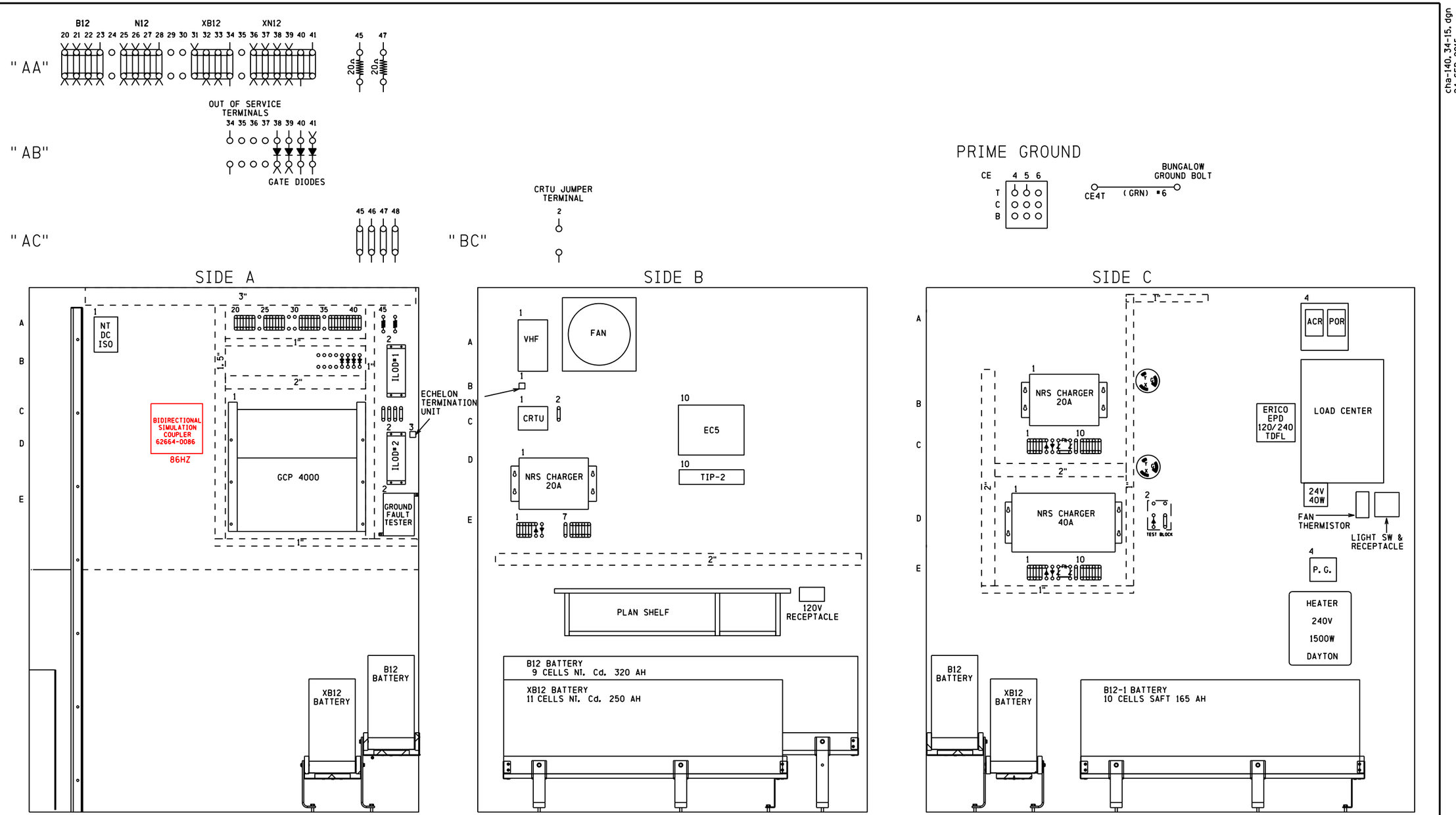

NOTES

1) SURGE PROTECTION SHOULD BE BONDED TO BUNGALOW

REPRESENTS PANDUIT

DENOTES RECTIFIER (SAFETRAN #8008A299006)

DENOTES HD EQUALIZER CN# 02-32-391
SAFETRAN # 022700-1X

"A" DENOTES AIR GAP ARRESTOR CN# 02-25-168
SAFETRAN # 022485-28X

SIEMENS INDUSTRY INC			
DES. : NAD	DATE: 28/05/15	JOB NO. : PICA10588	
CKD. : MRB	ISSUE DATE: N/A	EST. NO. :XP-7839	
DRN. : NAD	PLAN NO. :N/A	SHEET 15 OF 17	
P TIME:09:17	P DATE: $$PLOT_DATE	CAD ID. : CHA-140. 34-15	

PROPOSED
DESIGN NO. 15-0151
RED-IN YELLOW-OUT

AS INSTALLED
DATE _____
BY _____
(PRINT NAME)

PROPOSED D	PROPOSED M	PROPOSED Y	REVISIONS	D	C	COMPLETED D	COMPLETED M	COMPLETED Y	C
			AS INSTALLED			02	10	12	LSS
11	09	13	ADD EC5 REPEATER	MZC	PJB	11	09	15	MZC
28	05	15	ADAMS ST CWT UPGRADE	NAD	MRB				

REGION SOUTHERN
SUB. CHAMPAIGN 341

SIGNALS AND COMMUNICATIONS HOMEWOOD
19 AUGUST 2011
DES. TMF
CH. BJW

BUNGALOW LAYOUT SIDES A, B & C

PESOTUM, IL
400N

CHA-140. 34-15

cha-140. 34-15. dgn
24-SEP-2015

SIEMENS INDUSTRY INC
LOUISVILLE DIVISION, LOUISVILLE, KY

DOT# 289 100F

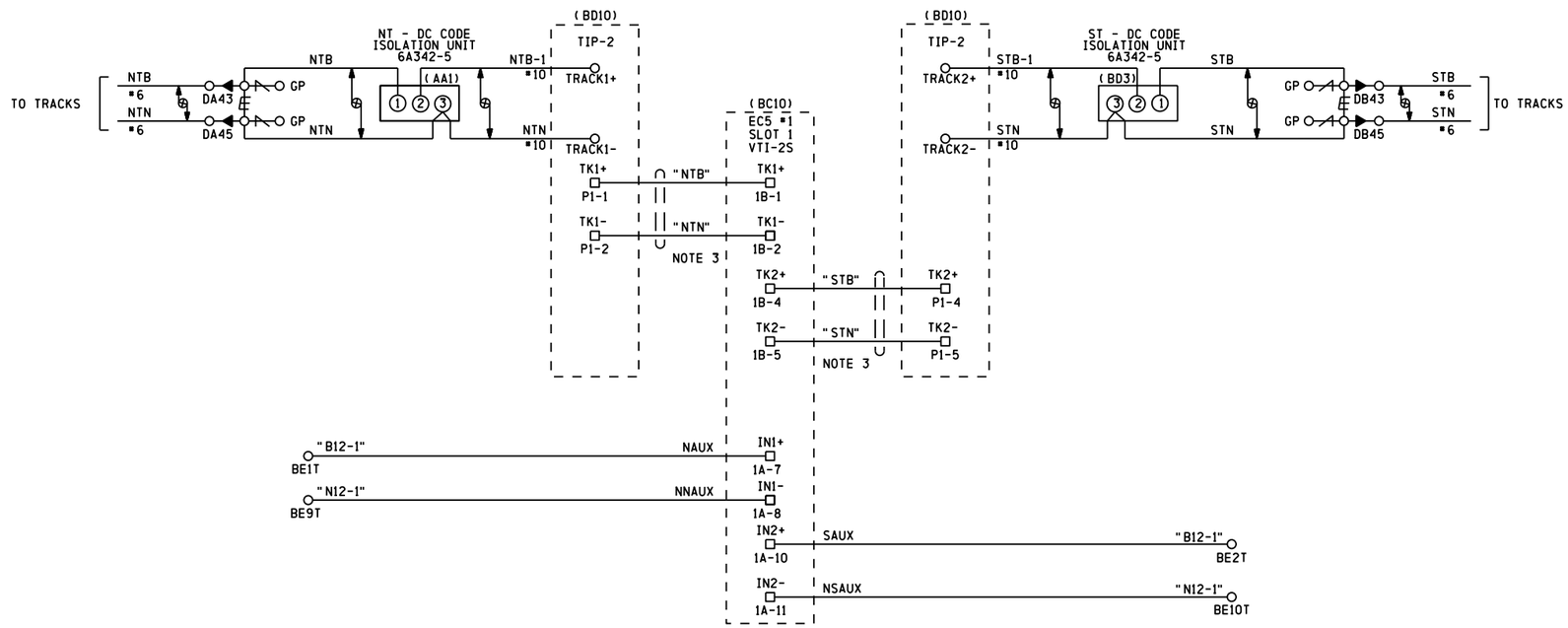

NOTES
1) CIRCUITS TO BE #16 AWG UNLESS OTHERWISE NOTED
2) GP INDICATES GROUND PLANE
3) 8' TIP-2 CABLE HPN 814-096000-017

-DENOTES TWISTED PAIR

" " -DENOTES REFERENCE, NOT WIRE TAG

PROPOSED D	PROPOSED M	PROPOSED Y	REVISIONS	D	C	COMPLETED D	COMPLETED M	COMPLETED Y	C
			AS-INSTALLED			11	09	15	MZC

REGION SOUTHERN
SUB. CHAMPAIGN 341

SIGNALS AND COMMUNICATIONS HOMEWOOD
DES. MZC
11 SEPTEMBER 2013
CH. PJB

TRACK CIRCUITS

PESOTUM, IL
400N

CHA-140.34-16

DOT# 289 100F

cha-140.34-16.dgn
24-SEP-2015

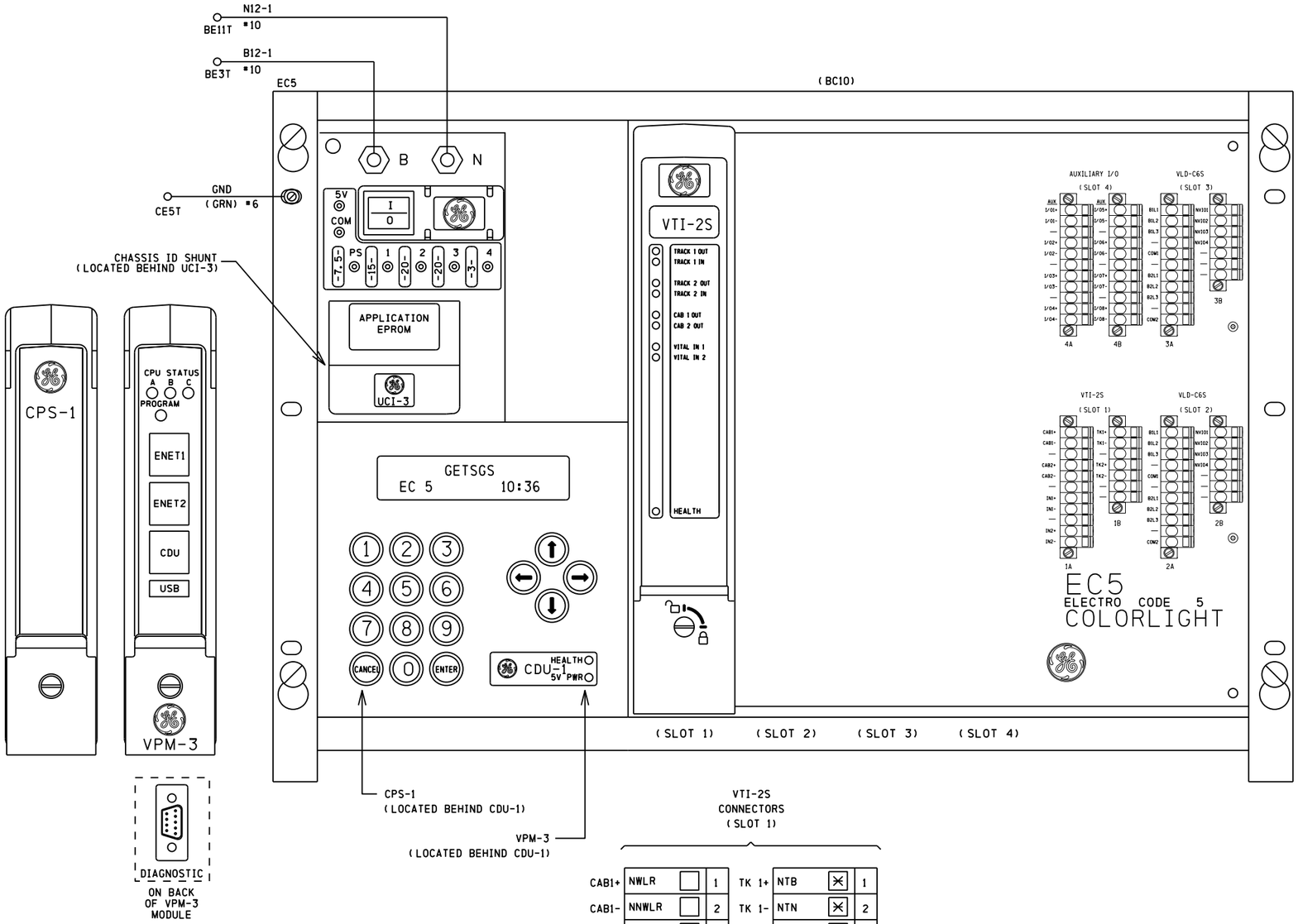

VTI-2S CONNECTORS (SLOT 1)

CAB1+	NWLR		1
CAB1-	NNWLR		2
			3
CAB2+	SWLR		4
CAB2-	NSWLR		5
			6
IN 1+	NAUX	X	7
IN 1-	NNAUX	X	8
			9
IN 2+	SAUX	X	10
IN 2-	NSAUX	X	11

1A

TK 1+	NTB	X	1
TK 1-	NTN	X	2
			3
TK 2+	STB	X	4
TK 2-	STN	X	5

1B

PERSONALITY MODULE LEGEND

TERMINAL LABEL → XXX | XXXX | X | ← PIN NUMBER

APPLICATION DESCRIPTION

WIRE PRESENT

EXECUTIVE INFORMATION		
VPM-3	VERSION	CRC
VPM-A PROCESSOR	6.12	D50D3768
VPM-B PROCESSOR	6.12	67B6F39E
VPM-C PROCESSOR	6.12	25C506E6

VITAL TIMER SETTINGS	
TIMER	VALUE
LLRST_DONE	2 MIN. •
RLRST_DONE	2 MIN. •
LLRLT_DONE	10 MIN. •
RLRLT_DONE	10 MIN. •

• = SET TO DEFAULT

VPM3 ETHERNET SETUP	
PORT 1 (TOP) IP ADDRESS	192.168.0.37
SUBNET MASK	255.255.255.0
PORT 2 (BOTTOM) IP ADDRESS	192.168.1.12
SUBNET MASK	255.255.255.0
DEFAULT GATEWAY	0.0.0.0

APPLICATION SOFTWARE INFORMATION	
NAME	EC5RPTR
REV.	0
VITAL	CHECKSUM: 1CED / CRC: C226
NON-VITAL	CHECKSUM: 88CD / CRC: 1A47
YEAR COMPILED	2011
MONTH COMPILED	MAY
CHASSIS ID	26

CHASSIS ID DIP SHUNTS
LOCATED ON BACKPLANE
UNDERNEATH UCI-3 MODULE

1 2 3 4 5 6 7 8

○ = TAB INTACT (MADE)

○ = TAB PUNCHED OUT (BROKEN)

VITAL SELECTION DIP SHUNTS
LOCATED INSIDE UCI-3 MODULE
UNDERNEATH EPROM

1 2 3 4 5 6 7 8 9 10 11 12 13 14 15 16

VITAL CONFIGURATION SETTINGS				
SETT.	STATUS	TRUE	FALSE	BIT MEANING
1	IOBRD		X	SET TRUE FOR I/O BOARD LOCK RELEASE
2	ARD3		X	SET TRUE FOR ARD-3 LOCK RELEASE

PROPOSED D	M	Y	REVISIONS	D	C	COMPLETED D	M	Y	C
			AS-INSTALLED			11	09	15	MZC

REGION SOUTHERN

SUB. CHAMPAIGN 341

SIGNALS AND COMMUNICATIONS HOMEWOOD

DES. MZC

11 SEPTEMBER 2013

CH. PJB

EC5 CHASSIS, SOFTWARE CONFIG. & MODULE CONNECTOR USAGE
PESOTUM, IL
400N

CHA-140.34-17

DOT# 289 100F

17

cha-140.34-17.dgn
24-SEP-2015