REVISIONS			
NO.	DATE	BY	DESCRIPTION	APP. BY
1				
2				
3				
4				
5				

FLASHING LIGHT UNITS ALIGNMENT TABLE

PRIMARY FRONT LIGHTS FOR VEHICLES							
SIG #	LIGHT #	ROUNDEL		ROAD SPEED	MINIMUM DISTANCE	RECOMMENDED DISTANCE	ALIGNMENT DISTANCE
		SIZE	TYPE	MPH	FT	FT	FT
1	1,2	12"	LED	40	390	650	
2	7,8	12"	LED	40	390	650	
BACK LIGHTS FOR VEHICLES							
SIG #	LIGHT #	ROUNDEL		ROAD SPEED	MINIMUM DISTANCE	RECOMMENDED DISTANCE	ALIGNMENT DISTANCE
		SIZE	TYPE	MPH	FT	FT	FT
1	3,4	12"	LED	N/A	N/A	N/A	50
2	5,6	12"	LED	N/A	N/A	N/A	50

NOTE
FIELD IS TO PROVIDE THE ACTUAL ALIGNMENT DISTANCE AS DETERMINED BY
SCP-706: ROAD CROSSING DEVICE LIGHT UNIT ALIGNMENT PROCEDURES

CONTENT	SHEET NO.
SITUATION SKETCH	0
TRACK LAYOUT & INDEX	01
GCP 4000 CHASSIS & MODULE LAYOUT	02
GCP 4000 PROGRAM INFORMATION	03
GCP 4000/SEAR III SETUP & PROGRAM	04
GCP 4000 CALIBRATION HISTORY	05
GCP 4000 TRACK 1 & RIO MODULE CONNECTIONS	06
GCP 4000 CPUII+ & VHF COMMUNICATOR	07
GCP 4000/SEARIII WITH GFT & CRTU	08
GCP 4000/SSCCIIII GATE CONTROLLERS W/ ILODS	09
GATE 1 &2 MECH. CONTROL CIRCUITS SAFETRAN S-60	10
DC DISTRIBUTION	11
AC DISTRIBUTION	12
BUNGALOW LAYOUT TOP VIEW	13
BUNGALOW LAYOUT SIDE D & L.I.G.P.	14
BUNGALOW LAYOUT SIDES A, B & C	15

wau-046.47-01.dgn
15-SEP-2015

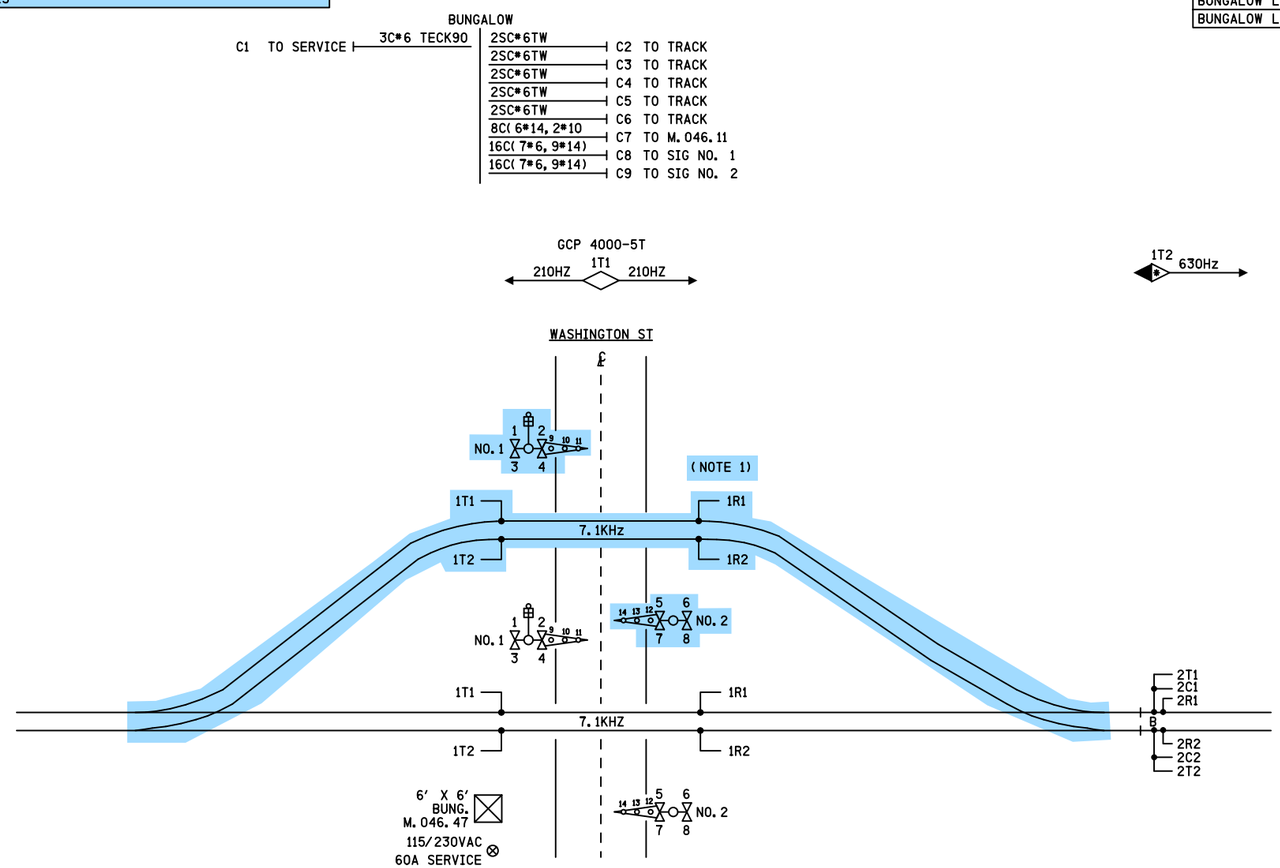

REUSE THE BUNGALOW
FROM WAU-048.22
ROLLINS RD

SII 01 SEP 2015

TO BE CONFIRMED
CONFIRMED
DATE _____
BY _____
(PRINT NAME)

PROPOSED
DESIGN NO. 14-0172
RED-IN YELLOW-OUT
AS INSTALLED
DATE _____
BY _____
(PRINT NAME)

NOTE

1) TEMPORARY ROADWAY RUNAROUND, ONLY ONE TRACK (SET OF GATES & CROSSING ISLAND) IN OPERATION AT A TIME

▶ DENOTES 6 WIRE TRACK CONNECTION

SIEMENS INDUSTRY INC			
DES.: NAD	DATE: 01/09/15	JOB NO.: PWCAIOxxx	
CKD.: BJW	ISSUE DATE: N/A	EST. NO.: XP-7958	
DRN.: NAD	PLAN NO.: N/A	SHEET 1 OF 15	
P. TIME: 07:48	P. DATE: 15-SEP-2015	CAD ID.: WAU-046.47-01	

PROPOSED D	M	Y	REVISIONS	D	C	COMPLETED D	M	Y	C

REGION SOUTHERN
SUB. WAUKESHA 435

SIGNALS AND COMMUNICATIONS HOMEWOOD
DES. NAD
01 SEPTEMBER 2015
CH. BJW

TRACK LAYOUT & INDEX

GRAYSLAKE, IL
WASHINGTON ST

WAU-046.47-01

DOT#689 726P

SIEMENS INDUSTRY INC
LOUISVILLE DIVISION, LOUISVILLE, KY

REVISIONS				
NO.	DATE	BY	DESCRIPTION	APP. BY
1				
2				
3				
4				
5				

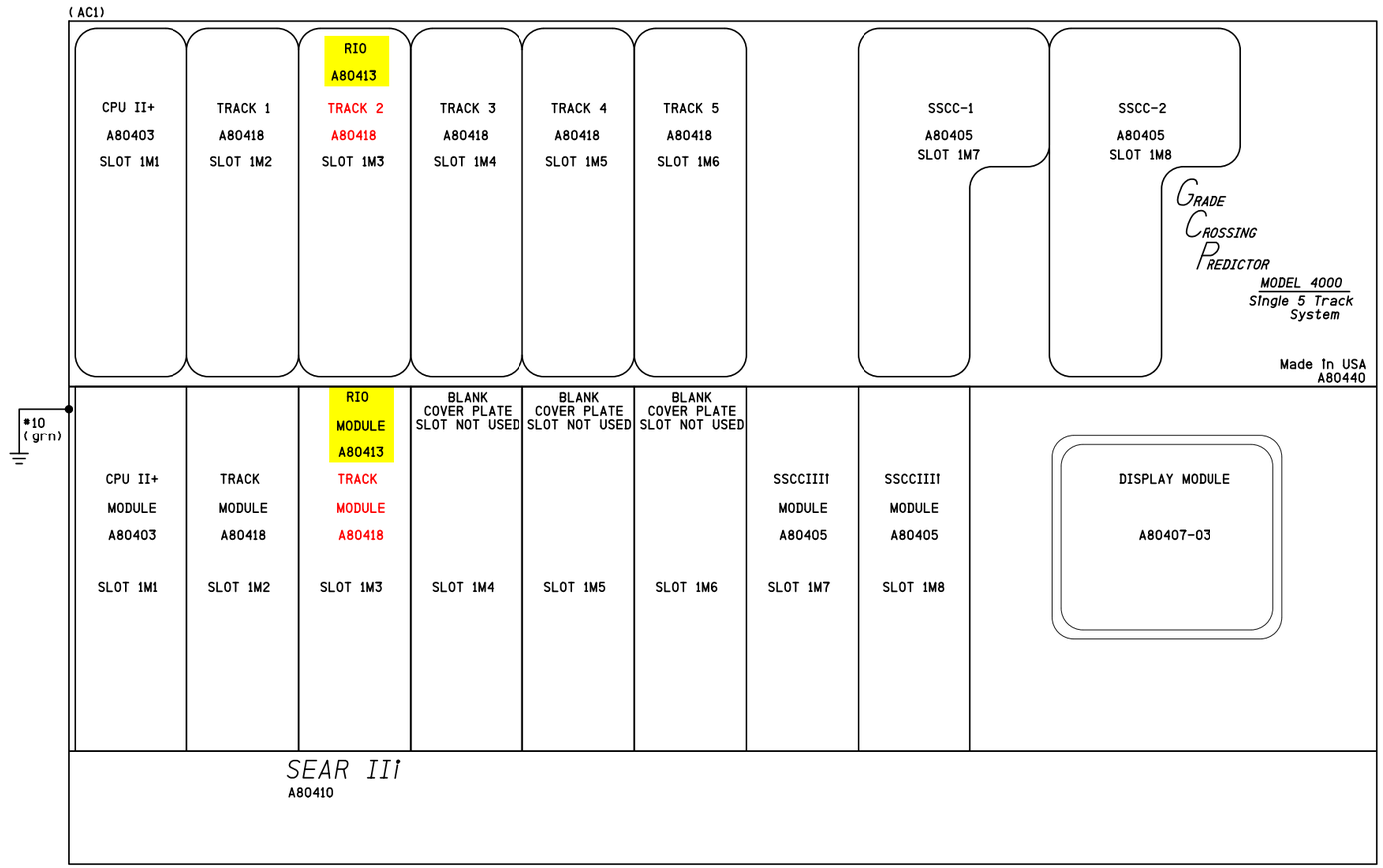

NOTES

1) DISABLE THE DISPLAY HEATER BY REMOVING JUMPER J-22 (LOCATED AT THE EDGE OF THE DISPLAY MODULE CARD THAT PLUGS INTO THE CHASSIS)

ATTENTION!

ENSURE THE DISPLAY MODULE HEATER IS DISABLED
LEAVING THE DISPLAY HEATER ENABLED WILL REDUCE THE AMOUNT OF BATTERY STANDBY TIME IN THE EVENT OF AN AC POWER FAILURE

HEATER FUNCTION IS JUMPER SELECTABLE ON THE DISPLAY MODULE BOARD
THREE OPTIONS ARE AVAILABLE
NORMAL LCD HTR (DEFAULT)
HI CURRENT
NO JUMPER (HEATER DISABLED)

REUSE THE BUNGALOW FROM WAU-048.22 ROLLINS RD

SII 01 SEP 2015

PROPOSED
DESIGN NO. 14-0172
RED-IN YELLOW-OUT

AS INSTALLED
DATE _____
BY _____
(PRINT NAME)

PROPOSED D	M	Y	REVISIONS	D	C	COMPLETED D	M	Y	C
01	09	15	SHOEFLY FOR OVERPASS	NAD	BJW				

REGION SOUTHERN
SUB. WAUKESHA 435

SIGNALS AND COMMUNICATIONS HOMEWOOD
01 SEPTEMBER 2015
DES. NAD
CH. BJW

GCP 4000
CHASSIS & MODULE LAYOUT
GRAYSLAKE, IL
WASHINGTON ST

WAU-046.47-02

DOT#689 726P

SIEMENS INDUSTRY INC	
DES.: NAD	DATE: 01/09/15
CKD.: BJW	ISSUE DATE: N/A
DRN.: NAD	PLAN NO.: N/A
P. TIME: 07:48	P. DATE: 15-SEP-2015
JOB NO.: PWCA10xxx	
EST. NO.: XP-7958	
SHEET 2 OF 15	
CAD ID.: WAU-046.47-02	

SIEMENS INDUSTRY INC
LOUISVILLE DIVISION, LOUISVILLE, KY

wau-046.47-02.dgn
15-SEP-2015

REVISIONS				
NO.	DATE	BY	DESCRIPTION	APP. BY
1				
2				
3				
4				
5				

Program Report

Location and SIN

DOT Number: 689726P
Milepost Number: 046.47
Site Name: WASHINGTON ST

SIN: 762010010016

MCF and Template Selection

MCF Name: GCP-T6X-02-2.mcf
MCF Revision: 022
MCFCRC: 79225F13

Template = 1D:3 Uni pairs (OCCN)

Check Numbers

Office Check Number: 7A2077EC
Config. Check Number: 52745AF5
(Based on MCF Revision 022)

Program

BASIC: module configuration
Track 1/PSO 1 Slot = Track (OCCN)
Track 2/RIO 1 Slot = Track (OCCN)
Track 3/PSO 2 Slot = Not Used (OCCN)
Track 4/PSO 3 Slot = Not Used (OCCN)
Track 5/RIO 2 Slot = Not Used (OCCN)
Track 6/RIO 3 Slot = Not Used (OCCN)
SSCC-1 Slot = SSCC31 (OCCN)
SSCC-2 Slot = SSCC31 (OCCN)
SEAR Used = Yes (OCCN)

BASIC: MS/GCP operation
Track 1 : MS/GCP Operation = Yes (OCCN)
Track 2 : MS/GCP Operation = Yes (OCCN)

BASIC: Island operation
Track 1 : Island Used = Internal (OCCN)
Track 2 : Island Used = No (OCCN)

BASIC: preemption
Preempt Logic = No (OCCN)

BASIC: radio Dax links
Radio DAX link A Used = No (OCCN)
Radio DAX link B Used = No (OCCN)

BASIC: Vital Comms links
Vital Comms link 1 Used = No (OCCN)
Vital Comms link 2 Used = No (OCCN)

PREDICTORS: track 1
Track 1 : Prime Used = Yes (OCCN)
Track 1 : Dax A Used = No (OCCN)
Track 1 : Dax B Used = No (OCCN)
Track 1 : Dax C Used = No (OCCN)
Track 1 : Dax D Used = No (OCCN)
Track 1 : Dax E Used = No (OCCN)
Track 1 : Dax F Used = No (OCCN)
Track 1 : Dax G Used = No (OCCN)

PREDICTORS: track 2
Track 2 : Prime Used = Yes (OCCN)
Track 2 : Dax A Used = No (OCCN)
Track 2 : Dax B Used = No (OCCN)
Track 2 : Dax C Used = No (OCCN)
Track 2 : Dax D Used = No (OCCN)
Track 2 : Dax E Used = No (OCCN)
Track 2 : Dax F Used = No (OCCN)
Track 2 : Dax G Used = No (OCCN)

GCP: track 1
Track 1 : GCP Freq Category = Offset (Field)
Track 1 : GCP Frequency = 210 Hz (Field, TCN)
Track 1 : Approach Distance = 3090 ft (Field, TCN)
Track 1 : Uni/Bi/Sim-Bidirni = Bidirni (OCCN, TCN)
Track 1 : GCP Transmit Level = High (Field, TCN)
Track 1 : Island Connection = Isl1 (OCCN)
Track 1 : Directionally Wired = No (OCCN)
Track 1 : Island Distance = 130 ft (Field, TCN)
Track 1 : Computed Distance = 9999 ft (Field, TCN)
Track 1 : Linearization Steps = 100 (Field, TCN)

GCP: track 1 enhanced det
Track 1 : Inbound PS Sensitivity = High (Field)
Track 1 : Speed Limiting Used = Yes (Field)
Track 1 : Outbound False Act Lvl = Normal (Field)
Track 1 : Outbound PS Timer = 20 sec (Field)
Track 1 : Trailing Switch Logic = On (Field)
Track 1 : Post Joint Detn Time = 15 sec (OCCN)
Track 1 : Adv Appr Predn = No (OCCN)
Track 1 : Cancel Pickup Delay = This Isl (OCCN)

GCP: track 1 BIDAX RX
Track 1 : BIDAX To RX Appr = Not Used (OCCN)

GCP: track 1 BIDAX TX
Track 1 : BIDAX To TX Appr = Not Used (OCCN)

GCP: track 1 prime
Track 1 : Prime Warning Time = 30 sec (OCCN)
Track 1 : Prime Offset Distance = 0 ft (Field)
Track 1 : Switch MS EZ Level = 10 (OCCN)
Track 1 : Prime MS/GCP Mode = Pred (OCCN)
Track 1 : Prime Pickup Delay = 30 sec (OCCN)
Track 1 : Prime UAX = Not Used (OCCN)

GCP: track 1 pos start
Track 1 : Positive Start = Off (OCCN)
Track 1 : Sudden Shnt Det Used = No (OCCN)
Track 1 : Low EZ Detection Used = No (OCCN)

GCP: track 1 MS Control
Track 1 : MS/GCP Ctrl IP Used = No (OCCN)
Track 1 : MS Sensitivity Level = 0 (Field)
Track 1 : Compensation Level = 1300 (Field, TCN)
Track 1 : Warn Time-Ballast Comp = High (Field, TCN)
Track 1 : Low EX Adjustment = 39 (Field)
Track 1 : Bidirn Dax Passthru = No (OCCN)
Track 1 : False Act on Train Stop = No (Field)
Track 1 : EX Limiting Used = Yes (Field)
Track 1 : EZ Correction Used = Yes (Field)

GCP: track 2
Track 2 : GCP Freq Category = Other (Field)
Track 2 : GCP Frequency = 630 Hz (Field, TCN)
Track 2 : Approach Distance = 675 ft (Field, TCN)
Track 2 : Uni/Bi/Sim-Bidirni = Sim. Bidirni (OCCN, TCN)
Track 2 : GCP Transmit Level = High (Field, TCN)
Track 2 : Island Connection = No Islands (OCCN)
Track 2 : Directionally Wired = No (OCCN)
Track 2 : Island Distance = 0 ft (Field, TCN)
Track 2 : Computed Distance = 9999 ft (Field, TCN)
Track 2 : Linearization Steps = 100 (Field, TCN)

GCP: track 2 enhanced det
Track 2 : Inbound PS Sensitivity = High (Field)
Track 2 : Speed Limiting Used = Yes (Field)
Track 2 : Outbound False Act Lvl = Normal (Field)
Track 2 : Outbound PS Timer = 20 sec (Field)
Track 2 : Trailing Switch Logic = On (Field)
Track 2 : Post Joint Detn Time = 15 sec (OCCN)
Track 2 : Adv Appr Predn = No (OCCN)
Track 2 : Cancel Pickup Delay = This Isl (OCCN)

GCP: track 2 BIDAX RX
Track 2 : BIDAX To RX Appr = Not Used (OCCN)

GCP: track 2 BIDAX TX
Track 2 : BIDAX To TX Appr = Not Used (OCCN)

GCP: track 2 prime
Track 2 : Prime Warning Time = 30 sec (OCCN)
Track 2 : Prime Offset Distance = 1799 ft (Field)
Track 2 : Switch MS EZ Level = 0 (OCCN)
Track 2 : Prime MS/GCP Mode = Pred (OCCN)
Track 2 : Prime Pickup Delay = 30 sec (OCCN)
Track 2 : Prime UAX = IP (OCCN)
Track 2 : Prime UAX Pickup = 22 sec (OCCN)

GCP: track 2 pos start
Track 2 : Positive Start = Off (OCCN)
Track 2 : Sudden Shnt Det Used = No (OCCN)
Track 2 : Low EZ Detection Used = No (OCCN)

GCP: track 2 MS Control
Track 2 : MS/GCP Ctrl IP Used = No (OCCN)
Track 2 : MS Sensitivity Level = 0 (Field)
Track 2 : Compensation Level = 1300 (Field, TCN)
Track 2 : Warn Time-Ballast Comp = Low (Field, TCN)
Track 2 : Low EX Adjustment = 39 (Field)
Track 2 : Bidirn Dax Passthru = No (OCCN)
Track 2 : False Act on Train Stop = No (Field)
Track 2 : EX Limiting Used = Yes (Field)
Track 2 : EZ Correction Used = Yes (Field)

ISLAND: track 1
Track 1 : Isl Frequency = 7.1 kHz (Field)
Track 1 : Pickup Delay (2s +) = 0 sec (OCCN)
Track 1 : Isl Enable IP Used = No (OCCN)

AND: track Anding
AND 1 XR Used = Yes (OCCN)
AND 2 Used = Yes (OCCN)
AND 3 Used = No (OCCN)
AND 4 Used = No (OCCN)
AND 5 Used = No (OCCN)
AND 6 Used = No (OCCN)
AND 7 Used = No (OCCN)
AND 8 Used = No (OCCN)

AND: AND 1 XR
AND 1 XR Track 1 = Prime (OCCN)
AND 1 XR Track 2 = Prime (OCCN)
AND 1 Enable Used = Yes (OCCN)
And 1 Enable Pickup = 0 sec (OCCN)
AND 1 Enable Drop = 0 sec (OCCN)
AND 1 Wrap Used = No (OCCN)

AND: AND 2
AND 2 Track 1 = Not Used (OCCN)
AND 2 Track 2 = Not Used (OCCN)
AND 2 Enable Used = Yes (OCCN)
AND 2 Enable Pickup = 0 sec (OCCN)
AND 2 Enable Drop = 0 sec (OCCN)
AND 2 Wrap Used = No (OCCN)

ADVANCED: MS restart
MS/GCP Restart Used = No (OCCN)

ADVANCED: out of service
OOS Control = OOS IPs (OCCN)

ADVANCED: out of service 2
T1 OOS Control = OOS Input 1 (OCCN)
T2 OOS Control = OOS Input 1 (OCCN)
T1 OOS Controls = GCP and Island (OCCN)
T2 OOS Controls = GCP Only (OCCN)

ADVANCED: track wrap circuits
Wrap LOS Timer = 5 sec (OCCN)
Track 1 Wrap Used = No (OCCN)
Track 2 Wrap Used = No (OCCN)

ADVANCED: trk 1 overrides
Track 1 : All Predictors Override Used = No (OCCN)

ADVANCED: trk 2 overrides
Track 2 : All Predictors Override Used = No (OCCN)

ADVANCED: OR logic
OR 1 Used = No (OCCN)
OR 2 Used = No (OCCN)
OR 3 Used = No (OCCN)
OR 4 Used = No (OCCN)

ADVANCED: Internal I/O 1
Pass Thrus = Yes (OCCN)
Int.1 Sets = AND 2 Enable (OCCN)
Int.1 Set by = Passthru State 1 (OCCN)
Int.2 Sets = AND 2 Enable (OCCN)
Int.2 Set by = Passthru State 2 (OCCN)
Int.3 Sets = GD 1.1 (OCCN)
Int.3 Set by = Passthru State 1 (OCCN)
Int.4 Sets = GD 2.1 (OCCN)
Int.4 Set by = Passthru State 2 (OCCN)

ADVANCED: Internal I/O 2
Int.5 Sets = Not Used (OCCN)
Int.5 Set by = Not Used (OCCN)
Int.6 Sets = Not Used (OCCN)
Int.6 Set by = Not Used (OCCN)
Int.7 Sets = Not Used (OCCN)
Int.7 Set by = Not Used (OCCN)
Int.8 Sets = Not Used (OCCN)
Int.8 Set by = Not Used (OCCN)

ADVANCED: Internal I/O 3
Int.9 Sets = Not Used (OCCN)
Int.9 Set by = Not Used (OCCN)
Int.10 Sets = Not Used (OCCN)
Int.10 Set by = Not Used (OCCN)
Int.11 Sets = Not Used (OCCN)
Int.11 Set by = Not Used (OCCN)
Int.12 Sets = Not Used (OCCN)
Int.12 Set by = Not Used (OCCN)

ADVANCED: Internal I/O 4
Int.13 Sets = Not Used (OCCN)
Int.13 Set by = Not Used (OCCN)
Int.14 Sets = Not Used (OCCN)
Int.14 Set by = Not Used (OCCN)
Int.15 Sets = Not Used (OCCN)
Int.15 Set by = Not Used (OCCN)
Int.16 Sets = Not Used (OCCN)
Int.16 Set by = Not Used (OCCN)

ADVANCED: site options
Daylight Savings = On (Field)
Units = Standard (OCCN)
Maint Call Rpt IP Used = No (OCCN)
Emergency Activate IP = No (OCCN)
EZ/EX Logging = Change (Field)
EZ/EX Point Change = 3 (Field)

SSCC
Gates Used = Yes (OCCN)
SSCC1+2 GPs Coupled = Yes (OCCN)
Min Activation = 20 sec (OCCN)
Rmt Activation Cancel = 3 min (OCCN)
Bell On Gate Rising = No (OCCN)
Mute Bell On Gate Down = Yes (OCCN)
SSCCIV Controller Used = No (OCCN)

SSCC: 1
SSCC-1 Activation = AND 1 XR (OCCN)
SSCC-1 Gate Delay = 4 sec (OCCN)
SSCC-1 Number of GPs = 1 (OCCN)
SSCC-1 Number of GDs = 1 (OCCN)
SSCC 1 : Flash Rate = 55 (OCCN)
SSCC 1 : Low Battery Detection = No (Field)
SSCC 1 : Flash Sync = master (OCCN)
SSCC 1 : Invert Gate Output = No (OCCN)
SSCC 1 : Lamp Neutral Test = Off (Field)
Aux-1 Xng Ctrl Used = No (OCCN)

SSCC: 2
SSCC-2 Activation = AND 1 XR (OCCN)
SSCC-2 Gate Delay = 4 sec (OCCN)
SSCC-2 Number of GPs = 0 (OCCN)
SSCC-2 Number of GDs = 1 (OCCN)
SSCC 2 : Flash Rate = 55 (OCCN)
SSCC 2 : Low Battery Detection = No (Field)
SSCC 2 : Flash Sync = slave (OCCN)
SSCC 2 : Invert Gate Output = No (OCCN)
SSCC 2 : Lamp Neutral Test = Off (Field)
Aux-2 Xng Ctrl Used = No (OCCN)

OUTPUT: assignment page 1
OUT 1.1 = Not Used (OCCN)
OUT 1.2 = Not Used (OCCN)
OUT 2.1 = AND 1 XR (OCCN)
OUT 2.2 = AND 2 (OCCN)

INPUT: assignment page 1
IN 1.1 = Not Used (OCCN)
IN 1.2 = T2 Prime UAX (OCCN)
IN 2.1 = Not Used (OCCN)
IN 2.2 = Not Used (OCCN)

IO: assignment SSCC
OUT GC 1 = Gate Output 1 (OCCN)
OUT GC 2 = Gate Output 2 (OCCN)
IN 7.1 = AND 1 XR Enable (OCCN)
IN 7.2 = Not Used (OCCN)
IN 7.3 = Not Used (OCCN)
IN 7.4 = Passthru State 1 (OCCN)
IN 7.5 = GP 1.1 (OCCN)
IN 8.1 = Out Of Service IP 1 (OCCN)
IN 8.2 = Not Used (OCCN)
IN 8.3 = Not Used (OCCN)
IN 8.4 = Passthru State 2 (OCCN)
IN 8.5 = Not Used (OCCN)

SEAR
SEAR Subnode = 99 (OCCN)
DI 1 = General 1 (OCCN)
DI 2 = Gnd Flt Tester 1 (OCCN)
Rly 1 = Ground Fault Test (OCCN)
Rly 2 = AC Control (OCCN)

SEAR: Inputs
SP 2.1 = POK 1 (OCCN)
SP 3.1 = Not Used (OCCN)
SP 4.1 = Not Used (OCCN)
SP 5.1 = Not Used (OCCN)
SP 6.1 = Not Used (OCCN)

SEAR: slot 1-4 Inputs
IN 1.1 = Not Used (OCCN)
IN 2.1 = Not Used (OCCN)
IN 2.2 = POK 2 (OCCN)
IN 3.1 = Not Used (OCCN)
IN 3.2 = Not Used (OCCN)
IN 4.1 = Not Used (OCCN)
IN 4.2 = Not Used (OCCN)

SEAR: Inputs slot 5
IN 5.1 = Not Used (OCCN)
IN 5.2 = Not Used (OCCN)

SEAR: Inputs slot 6
IN 6.1 = Not Used (OCCN)
IN 6.2 = Not Used (OCCN)

SEAR: slot 7-8 Inputs
IN 7.2 = Not Used (OCCN)
IN 7.3 = TSS 1 (OCCN)
IN 8.2 = Not Used (OCCN)
IN 8.3 = TSS 2 (OCCN)
IN 8.5 = General 2 (OCCN)

SITE: programming
Radio Subnode = 1 (Field)
Field Password = Off (OCCN)
Low Battery Enabled = Off (Field)

Configuration Package File

Filename: wau-046.47.pac

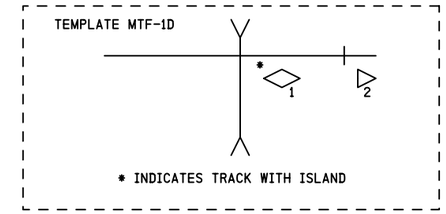

NOTES

1) DISTANCE(S) TO BE VERIFIED AT INSTALLATION
   INDICATE SELECTED PROGRAMMED VALUE IF DIFFERENT THAN SHOWN
   REFER TO 4000 GCP INSTRUCTION/INSTALLATION MANUAL
   FOR PROGRAMMING PARAMETERS

2) PROGRAM TEXT HIGHLIGHTED IN RED INDICATES 4000 PROGRAM
   MODIFICATIONS TO DEFAULT PROGRAM VALUES

3) EACH CONSTANT WARNING DEVICE SYSTEM TO BE PROGRAMMED TO
   CONVERT TO A MOTION SENSOR 300 FEET FROM EDGE OF ROAD
   TRAVELLED WAY
   SHUNT TRACK 300 FEET FROM EDGE OF ROAD TRAVELLED WAY
   AND NOTE "EZ" VALUE
   PROGRAM EACH SYSTEM WITH THE INDICATED "EZ" VALUE +2

4) VERIFY SET TIMER VALUE TO MATCH ACTUAL TRAIN MOVEMENT
   WITHIN THE CROSSING APPROACH CIRCUITS

GCP PROGRAM
TO BE RELOADED BY CN
BEFORE MAKING THIS INSTALLATION
IN SERVICE

SII 01 SEP 2015

PROPOSED
DESIGN NO. 14-0172
RED-IN YELLOW-OUT

AS INSTALLED
DATE _____
BY _____
(PRINT NAME)

PROPOSED			REVISIONS	D	C	COMPLETED			C
D	M	Y				D	M	Y	

REGION SOUTHERN
SUB. WAUKESHA 435

SIGNALS AND COMMUNICATIONS HOMEWOOD
01 SEPTEMBER 2015
DES. NAD
CH. BJW

GCP 4000
PROGRAM INFORMATION
GRAYSLAKE, IL
WASHINGTON ST

WAU-046.47-03

DOT#689 726P

wau-046.47-03.dgn
15-SEP-2015

SIEMENS INDUSTRY INC

DES.: NAD	DATE: 01/09/15	JOB NO.: PMCA10xxx	
CKD.: BJW	ISSUE DATE: N/A	EST. NO.: XP-7958	
DRN.: NAD	PLAN NO.: N/A	SHEET 3 OF 15	
P TIME: 07:48	P DATE: 15-SEP-2015	CAD ID.: WAU-046.47-03	

SIEMENS INDUSTRY INC
LOUISVILLE DIVISION, LOUISVILLE, KY

REVISIONS				
NO.	DATE	BY	DESCRIPTION	APP. BY
1				
2				
3				
4				
5				

TO CONFIGURE SEARII & SEARIII PRESS SITE SETUP KEY. USE ARROW KEYS TO MAKE SELECTION, PRESS ENTER AFTER SELECTION HAS BEEN MADE.

STAGE 1

PROGRAM MENU QUESTIONS	PROGRAM	OPTIONS/RANGE
DATE/TIME?	CURRENT DATE/TIME	CURRENT DATE/TIME
AUTOMATIC DST ADJUSTMENT?	YES	YES, NO
TIME ZONE?	CENTRAL	EASTERN, CENTRAL, MOUNTAIN, PACIFIC, ALASKA, HAWAII, ATLANTIC, SASKATCHEWAN, NEW FOUNLAND
SITE NAME?	WASHINGTON ST	STREET NAME
MILE POST?	046.47	MILEAGE
DOT/CROSSING IS #?	689726P	123456A
TESTER TYPE?	CROSSING	CROSSING, WAYSIDE
DATE FORMAT?	dd-mm-yyyy	mm-dd-yyyy, dd-mm-yyyy
TEMPERATURE FORMAT?	FAHRENHEIT	FAHRENHEIT, CELSIUS
INDICATE HOLD?	0	SECONDS
SITE TYPE?		NO COM, BULLHORN, DIALUP, NODE, COLLECTOR
SITE ATCS ADDRESS?		7.RRR.LLL.GGG.99.01
OFFICE ATCS ADDRESS?		2.RRR.NN.DDDD
PRIMARY HOP ADDR? (FOR NODE USE)		7.RRR.LLL.GGG.00.01
BACKUP HOP ADDR1? (FOR NODE USE)		7.RRR.LLL.GGG.00.01
BACKUP HOP ADDR2? (FOR NODE USE)		7.RRR.LLL.GGG.00.01
POLL ID? (FOR COLLECTOR USE)		1-99
MODE? (FOR COLLECTOR USE)		GEN/ATCS, GENISYS
WAMS/XID? (FOR COLLECTOR USE)		ENABLED, DISABLE
OFFICE COMM. DEVICE? (FOR COLLECTOR USE)		DIRECT (RS232) MCM (RS232) MCM (ECHELON) SREAD SPEC (ECHELON) DIAL MODEM (RS232) S200 RADIO (RS422)
OFFICE PHONE NUMBER? (FOR COLLECTOR USE)		PHONE NUMBER OF WAMS
INIT STRING? (FOR COLLECTOR USE)		OPTIONAL HAYES MODEM INITIALIZATION STRING
FIELD COMM. DEVICE?		VHF COMM. (ECHELON) VHF COMM. (RS232) SPREAD SPEC (ECHELON) SPREAD SPEC (RS232)
USER PORT?	57600, 8, N, 1, N	BAUD, DATA BITS, PARITY, STOP BITS, FLOW CONTROL
AUX PORT?	9600, 8, N, 1, N	BAUD, DATA BITS, PARITY, STOP BITS, FLOW CONTROL

YOU WILL NOW SEE A MESSAGE "PLEASE WAIT COMPILING STAGE 1" CONTINUE TO NEXT PROGRAM MENU QUESTIONS.

NOTES:

1) ASSIGNED DTMF CODES:

ACTIVATE CROSSING (MAIN TRACK - 1T1)	72611#
DE-ACTIVATE CROSSING (MAIN TRACK - 1T1)	72610#
ACTIVATE CROSSING (MAINTENANCE)	72671#
DE-ACTIVATE CROSSING (MAINTENANCE)	72670#

2) ADDITIONAL OPTIONS: DUAL CROSSING, EXTERNAL ENTRANCE GATE CONTROLLERS.

STAGE 2

QUESTION	PROGRAM	SELECTION 1 (MINIMUM)	SELECTION 2 (MAXIMUM)	CONDITION FOR MENU DISPLAY
RESET NAMES / MODULES ?	NO	YES	NO	ALWAYS
CROSSING CONFIGURATION ?	NORMAL	NORMAL	SPLIT GATE (NOTE 2)	ALWAYS
AND1 USED AS XR?	YES	NO	YES	ALWAYS
AND2 USED AS XR?	NO	NO	YES	ALWAYS
AND3 USED AS XR?	NO	NO	YES	ALWAYS
AND4 USED AS XR?	NO	NO	YES	ALWAYS
AND5 USED AS XR?	NO	NO	YES	ALWAYS
AND6 USED AS XR?	NO	NO	YES	ALWAYS
AND7 USED AS XR?	NO	NO	YES	ALWAYS
AND8 USED AS XR?	NO	NO	YES	ALWAYS
XR CONTROLLED BY FOREIGN RR?	NO	AND1	AND8	CROSSING CONFIGURATION = SPIT GATE
ENTRANCE GATES ?	2	0	8	ALWAYS
GATE CONTROLLED BY FOREIGN RR?	NONE	NONE	TSS4	CROSSING CONFIGURATION = SPIT GATE
GATE DESCENT TIME (SECONDS)	11	7	20	GATES > 0
GATE POSITION FAIL TIME (SECONDS) ?	17	10	60	GATES > 0
BATTERY BANKS ?	2	1	3	ALWAYS
BATT MON USED ?	NO	NO	YES	ALWAYS
INTERNAL CROSSING CONTROLLERS ?	2	0	2	ALWAYS
EXTERNAL CROSSING CONTROLLERS ?	0	0	2	CROSSING CONTROLLER = YES
ALLOW DTMF CONTROL ?	YES	NO	YES	ALWAYS
COUNTRY	US	CANADA	US	ALLOW DTMF CONTROL = YES
DTMF CONTROL WITH PREMPTION ?	NO	NO	YES	ALLOW DTMF CONTROL = YES
POK ANNOUNCEMENT TO VHF ?	NO	NO	YES	ALLOW DTMF CONTROL = YES
VHF VOICE CHANNEL ?	1	1	8	ALLOW DTMF CONTROL = YES
VHF DATA CHANNEL ?	1	1	8	ALLOW DTMF CONTROL = YES
DIGIT #1 ?	7	0	9	ALLOW DTMF CONTROL = YES
DIGIT #2 ?	2	0	9	ALLOW DTMF CONTROL = YES
DIGIT #3 ?	6	0	9	ALLOW DTMF CONTROL = YES
DIGIT #4 ?	N/A	0	9	ALLOW DTMF CONTROL = YES
DIGIT #5 ?	N/A	0	9	ALLOW DTMF CONTROL = YES
TIME-OUT FOR DTMF REQUEST #1 ?	180	0	240	ALLOW DTMF CONTROL = YES
TIME-OUT FOR DTMF REQUEST #2 ?	0	0	240	ALLOW DTMF CONTROL = YES
TIME-OUT FOR DTMF REQUEST #3 ?	0	0	240	ALLOW DTMF CONTROL = YES
TIME-OUT FOR DTMF REQUEST #4 ?	0	0	240	ALLOW DTMF CONTROL = YES

STAGE 2 CONT'D

QUESTION	PROGRAM	SELECTION 1 (MINIMUM)	SELECTION 2 (MAXIMUM)	CONDITION FOR MENU DISPLAY
TIME-OUT FOR DTMF REQUEST #5 ?	0	0	240	ALLOW DTMF CONTROL = YES
TIME-OUT FOR DTMF REQUEST #6 ?	0	0	240	ALLOW DTMF CONTROL = YES
TIME-OUT FOR DTMF REQUEST #7 ?	180	0	240	ALLOW DTMF CONTROL = YES
ISLAND RELEASE DTMF REQUEST #1 ?	1	0	6	TIME-OUT FOR DTMF REQUEST #1 > 0
ISLAND RELEASE DTMF REQUEST #2 ?	0	0	6	TIME-OUT FOR DTMF REQUEST #2 > 0
ISLAND RELEASE DTMF REQUEST #3 ?	0	0	6	TIME-OUT FOR DTMF REQUEST #3 > 0
ISLAND RELEASE DTMF REQUEST #4 ?	0	0	6	TIME-OUT FOR DTMF REQUEST #4 > 0
ISLAND RELEASE DTMF REQUEST #5 ?	0	0	6	TIME-OUT FOR DTMF REQUEST #5 > 0
ISLAND RELEASE DTMF REQUEST #6 ?	0	0	6	TIME-OUT FOR DTMF REQUEST #6 > 0
ISLAND RELEASE DTMF REQUEST #7 ?	0	0	6	TIME-OUT FOR DTMF REQUEST #7 > 0
ILOD MODULES ?	2	0	4	ALWAYS
ANY LED BULBS USED ?	YES	NO	YES	ILOD MODULES > 0
AUTO INSPECTION ?	NO	YES	NO	ALWAYS
BELL SENSORS ?	1	0	8	ALWAYS
BELL SENSORS TSS1 ?	YES	NO	YES	BELL SENSORS > 0
BELL SENSORS TSS2 ?	NO	NO	YES	BELL SENSORS > 0
BELL SENSORS TSS3 ?	NO	NO	YES	BELL SENSORS > 0
BELL SENSORS TSS4 ?	NO	NO	YES	BELL SENSORS > 0
BELL SENSORS TSS5 ?	NO	NO	YES	BELL SENSORS > 0
BELL SENSORS TSS6 ?	NO	NO	YES	BELL SENSORS > 0
BELL SENSORS TSS7 ?	NO	NO	YES	BELL SENSORS > 0
BELL SENSORS TSS8 ?	NO	NO	YES	BELL SENSORS > 0
BELL ON ?	GATES LOWERING	GATES LOWERING		BELL SENSORS > 0
		GATES MOVING		
		ALWAYS		
BATTERY PERCENT FOR ALARM ?	85	0	100	ALWAYS
GFT'S ?	YES	YES	NO	ALWAYS
BATTERIES ON GFT1 ?	2	1	2	GFT'S = YES
GATE UP SOURCE ?	GP	TSS	GP	GATE > 0
GATE DOWN SOURCE ?	GD	TIP , TSS	GD	GATES > 0
USE CELL MODEM NON-CRITICAL FEATURE ?	NO	NO	YES	ALWAYS
FULL APPROACH MOVE ALARMS ?	ACTIVATE	ACTIVATE		ALWAYS
		DO NOT ACTIVATE		

YOU WILL NOW SEE A MESSAGE "PLEASE WAIT COMPILING STAGE 2" CONTINUE TO NEXT PROGRAM MENU QUESTIONS.

STAGE 3

PROGRAM MENU QUESTIONS	
EDIT DIGITAL INPUTS	NO
EDIT BATTERIES	NO
EDIT RELAYS	NO
EDIT TEST LEDS	NO
EDIT ILOD SENSORS	NO
EDIT VHF SETTINGS	NO
GCP4K ATCS SUBNODE?	16

SAVE CONFIGURATION

SEARIII PROGRAM TO BE REPROGRAMMED BY CN BEFORE MAKING THIS INSTALLATION IN SERVICE

SII 01 SEP 2015

PROPOSED
DESIGN NO. 14-0172
RED-IN YELLOW-OUT

AS INSTALLED
DATE _____
BY _____
(PRINT NAME)

SEARIII EXECUTIVE 9V725 REV. A01U, SEARIII APPLICATION 9VC45 REV. A01A

PROPOSED D	PROPOSED M	PROPOSED Y	REVISIONS	D	C	COMPLETED D	COMPLETED M	COMPLETED Y	C

REGION SOUTHERN
SUB. WAUKESHA 435
CN

SIGNALS AND COMMUNICATIONS HOMEWOOD
01 SEPTEMBER 2015
DES. NAD
CH. BJW

GCP 4000/SEAR III
SETUP & PROGRAM
GRAYSLAKE, IL
WASHINGTON ST

WAU-046.47-04

DOT#689 726P

SIEMENS INDUSTRY INC
LOUISVILLE DIVISION, LOUISVILLE, KY

SIEMENS INDUSTRY INC

DES.: NAD	DATE: 01/09/15	JOB NO.: PWCA10xxx	
CKD.: BJW	ISSUE DATE: N/A	EST. NO.: XP-7958	
DRN.: NAD	PLAN NO.: N/A	SHEET 4 OF 15	
P TIME: 07:48	P DATE: 15-SEP-2015	CAD ID.: WAU-046.47-04	

wau-046.47-04.dgn
15-SEP-2015

REVISIONS			
NO.	DATE	BY	DESCRIPTION	APP. BY
1				
2				
3				
4				
5				

GCP 4000
CALIBRATION HISTORY

INITIAL SET UP BY: _____ DATE: _____

		APPROACH DISTANCE CALIBRATION										LINEARIZATION CALIBRATION	
		EZ/EX VALUES (TRACK UNOCCUPIED)				HARD WIRE SHUNT AT TERMINATION SHUNT				COMPUTED APPROACH DISTANCE		LINEARIZATION STEP VALUE	
		EZ		EX		EZ		EX					
		NRML	STBY	NRML	STBY	NRML	STBY	NRML	STBY	NRML	STBY	NRML	STBY
NORTH	TRACK 1		N/A		N/A		N/A		N/A		N/A		N/A
SOUTH	TRACK 1		N/A		N/A		N/A		N/A		N/A		N/A
NORTH	TRACK 2	N/A	N/A	N/A	N/A	N/A	N/A	N/A	N/A	N/A	N/A	N/A	N/A
SOUTH	TRACK 2		N/A		N/A		N/A		N/A		N/A		N/A

GCP 4000
CALIBRATION HISTORY

INITIAL SET UP BY: _____ DATE: _____

		APPROACH DISTANCE CALIBRATION										LINEARIZATION CALIBRATION	
		EZ/EX VALUES (TRACK UNOCCUPIED)				HARD WIRE SHUNT AT TERMINATION SHUNT				COMPUTED APPROACH DISTANCE		LINEARIZATION STEP VALUE	
		EZ		EX		EZ		EX					
		NRML	STBY	NRML	STBY	NRML	STBY	NRML	STBY	NRML	STBY	NRML	STBY
NORTH	TRACK 1		N/A		N/A		N/A		N/A		N/A		N/A
SOUTH	TRACK 1		N/A		N/A		N/A		N/A		N/A		N/A
NORTH	TRACK 2	N/A	N/A	N/A	N/A	N/A	N/A	N/A	N/A	N/A	N/A	N/A	N/A
SOUTH	TRACK 2		N/A		N/A		N/A		N/A		N/A		N/A

GCP 4000
CALIBRATION HISTORY

INITIAL SET UP BY: _____ DATE: _____

		APPROACH DISTANCE CALIBRATION										LINEARIZATION CALIBRATION	
		EZ/EX VALUES (TRACK UNOCCUPIED)				HARD WIRE SHUNT AT TERMINATION SHUNT				COMPUTED APPROACH DISTANCE		LINEARIZATION STEP VALUE	
		EZ		EX		EZ		EX					
		NRML	STBY	NRML	STBY	NRML	STBY	NRML	STBY	NRML	STBY	NRML	STBY
NORTH	TRACK 1		N/A		N/A		N/A		N/A		N/A		N/A
SOUTH	TRACK 1		N/A		N/A		N/A		N/A		N/A		N/A
NORTH	TRACK 2	N/A	N/A	N/A	N/A	N/A	N/A	N/A	N/A	N/A	N/A	N/A	N/A
SOUTH	TRACK 2		N/A		N/A		N/A		N/A		N/A		N/A

SIII 01 SEP 2015

PROPOSED
DESIGN NO. 14-0172
RED-IN YELLOW-OUT

AS INSTALLED
DATE _____
BY _____
(PRINT NAME)

PROPOSED			REVISIONS	D	C	COMPLETED			C
D	M	Y				D	M	Y	

REGION SOUTHERN
SUB. WAUKESHA 435

SIGNALS AND COMMUNICATIONS HOMEWOOD
01 SEPTEMBER 2015
DES. NAD
CH. BJW

GCP 4000
CALIBRATION HISTORY
GRAYSLAKE, IL
WASHINGTON ST

WAU-046.47-05

DOT#689 726P

SIEMENS INDUSTRY INC		
DES. : NAD	DATE: 01/09/15	JOB NO.: PWCA10xxx
CKD. : BJW	ISSUE DATE: N/A	EST. NO.: XP-7958
DRN. : NAD	PLAN NO.: N/A	SHEET 5 OF 15
P TIME: 07:49	P DATE: 15-SEP-2015	CAD ID.: WAU-046.47-05

SIEMENS INDUSTRY INC
LOUISVILLE DIVISION, LOUISVILLE, KY

wau-046.47-05.dgn
15-SEP-2015

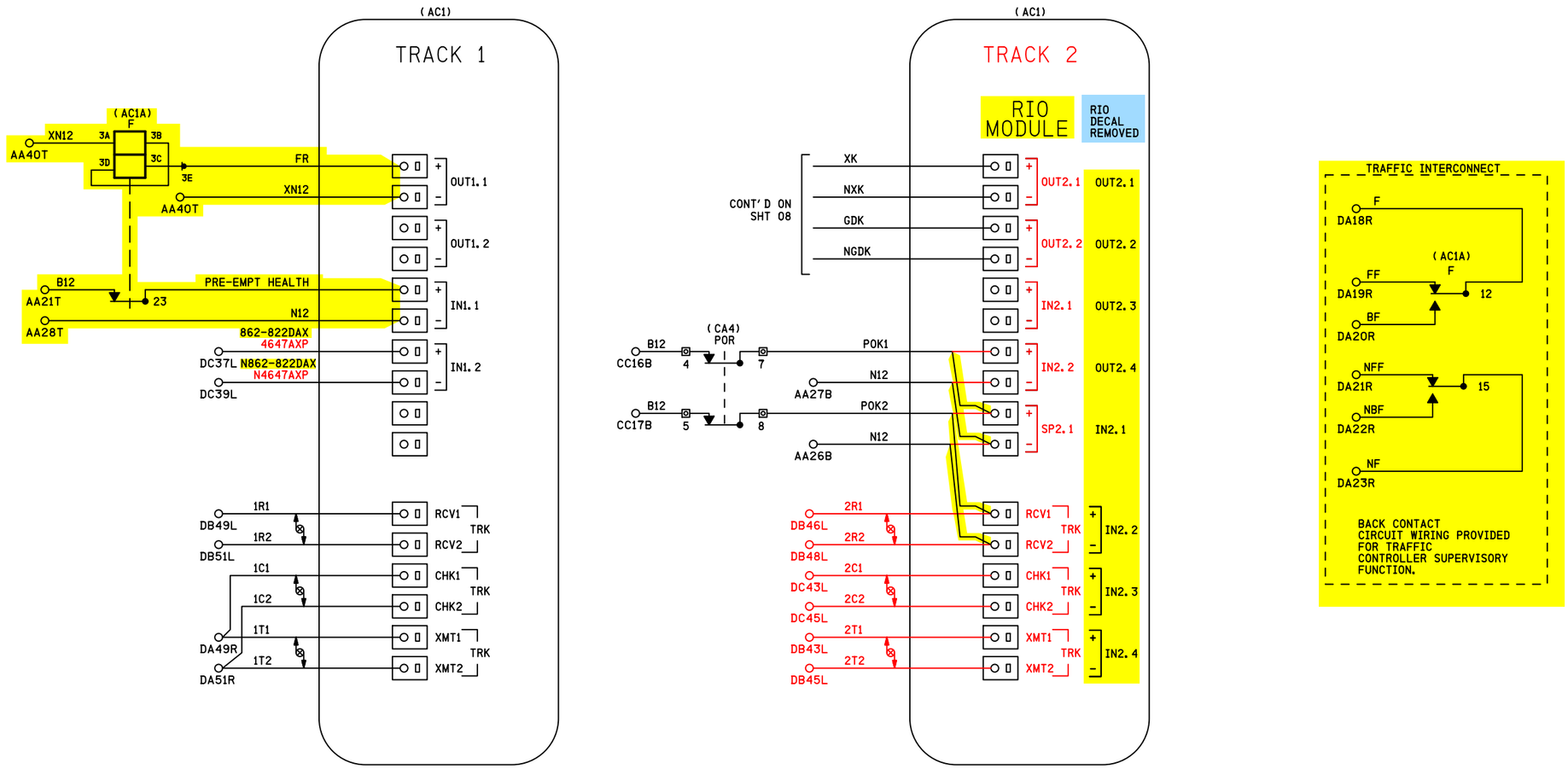

NOTES

1) ALL WIRING #16 AWG UNLESS OTHERWISE NOTED

DENOTES TWISTED PAIR

REUSE THE BUNGALOW FROM WAU-048.22 ROLLINS RD

SII 01 SEP 2015

PROPOSED
DESIGN NO. 14-0172
RED-IN YELLOW-OUT

AS INSTALLED
DATE
BY
(PRINT NAME)

PROPOSED D	M	Y	REVISIONS	D	C	COMPLETED D	M	Y	C
01	09	15	SHOEFLY FOR OVERPASS	NAD	BJW				

REGION SOUTHERN
SUB. WAUKESHA 435
SIGNALS AND COMMUNICATIONS HOMEWOOD
DES. NAD
01 SEPTEMBER 2015
CH. BJW
GCP 4000
TRACK 1 & 2 MODULE CONNECTIONS
GRAYSLAKE, IL
WASHINGTON ST
WAU-046.47-06
DOT#689 726P

REVISIONS				
NO.	DATE	BY	DESCRIPTION	APP. BY
1				
2				
3				
4				
5				

SIEMENS INDUSTRY INC

DES.: NAD	DATE: 01/09/15	JOB NO.: PWCA10xxx	
CKD.: BJW	ISSUE DATE: N/A	EST. NO.: XP-7958	
DRN.: NAD	PLAN NO.: N/A	SHEET 6 OF 15	
P TIME: 07:49	P DATE: 15-SEP-2015	CAD ID.: WAU-046.47-06	

SIEMENS INDUSTRY INC
LOUISVILLE DIVISION, LOUISVILLE, KY

wau-046.47-06.dgn
15-SEP-2015

REVISIONS				
NO.	DATE	BY	DESCRIPTION	APP. BY
1				
2				
3				
4				
5				

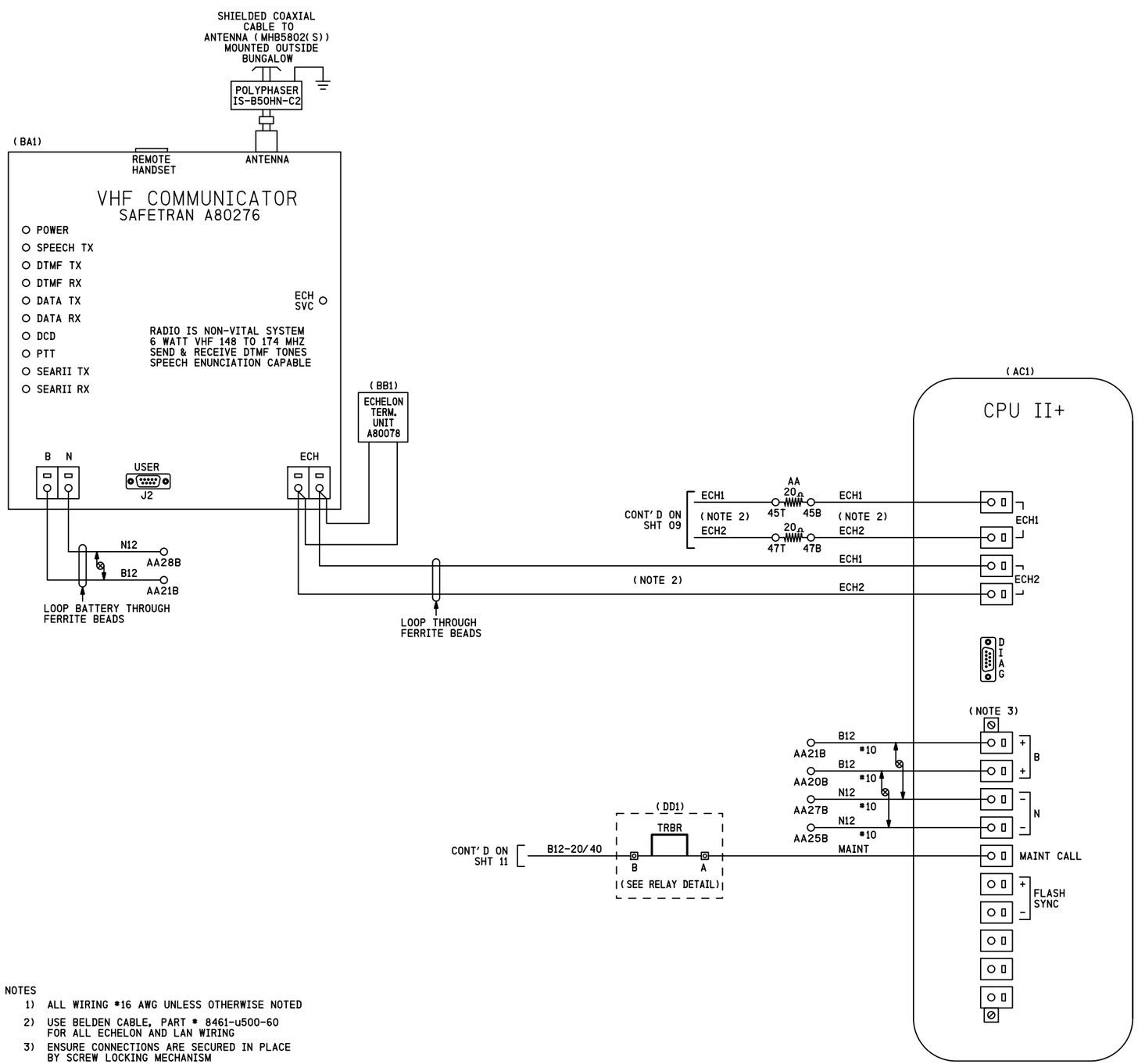

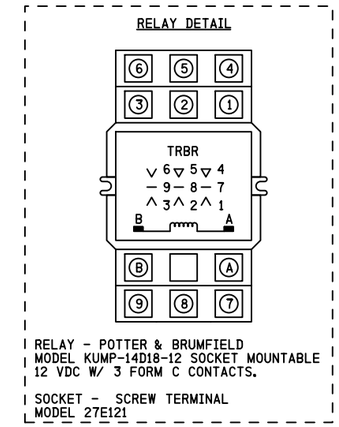

NOTES

1) ALL WIRING #16 AWG UNLESS OTHERWISE NOTED
2) USE BELDEN CABLE, PART # 8461-u500-60 FOR ALL ECHELON AND LAN WIRING
3) ENSURE CONNECTIONS ARE SECURED IN PLACE BY SCREW LOCKING MECHANISM

DENOTES TWISTED PAIR

REUSE THE BUNGALOW FROM WAU-048.22 ROLLINS RD

SII 01 SEP 2015

PROPOSED
DESIGN NO. 14-0172
RED-IN YELLOW-OUT

AS INSTALLED
DATE
BY
(PRINT NAME)

PROPOSED D	M	Y	REVISIONS	D	C	COMPLETED D	M	Y	C

REGION SOUTHERN
SUB. WAUKESHA 435

SIGNALS AND COMMUNICATIONS HOMEWOOD
01 SEPTEMBER 2015
DES. NAD
CH. BJW

GCP 4000
CPUII+ & VHF COMMUNICATOR
GRAYSLAKE, IL
WASHINGTON ST

WAU-046.47-07

DOT#689 726P

wau-046.47-07.dgn
15-SEP-2015

SIEMENS INDUSTRY INC			
DES.: NAD	DATE: 01/09/15	JOB NO.: PWCA10xxx	
CKD.: BJW	ISSUE DATE: N/A	EST. NO.: XP-7958	
DRN.: NAD	PLAN NO.: N/A	SHEET 7 OF 15	
P. TIME: 07:49	P. DATE: 15-SEP-2015	CAD ID.: WAU-046.47-07	

SIEMENS INDUSTRY INC
LOUISVILLE DIVISION, LOUISVILLE, KY

REVISIONS				
NO.	DATE	BY	DESCRIPTION	APP. BY
1				
2				
3				
4				
5				

wau-046.47-08.dgn
15-SEP-2015

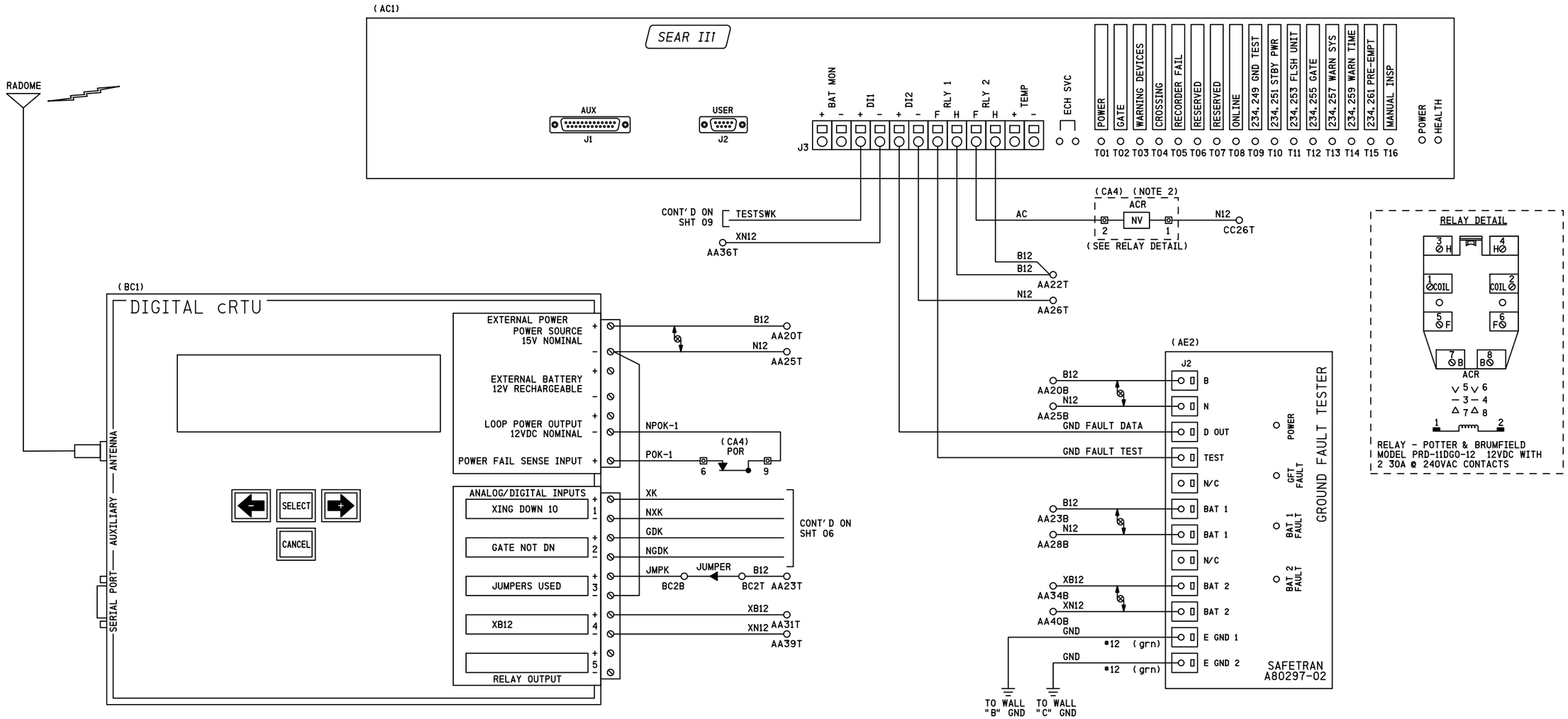

	CONFIGKEY:	30	
	MODEL:	C06C/2ANA V2.3	
	SERIAL #:		
	SITE IDENTIFIER:	DOT# 689 726P	

03 21910 3713
DOT# 689 728D

	LOW ALARM	RETURN	HIGH ALARM	RETURN
B12	11.6	12.6	15.6	14.6
XB12	13.8	14.8	17.8	16.8

NOTES
1) ALL WIRING #16 AWG UNLESS OTHERWISE NOTED
2) PART OF SEARIII POWER CONTROL AND INDICATION RELAY JUNCTION BOX

⊗ DENOTES TWISTED PAIR

REUSE THE BUNGALOW FROM WAU-048.22 ROLLINS RD

SII 01 SEP 2015

TO BE CONFIRMED

CONFIRMED
DATE _____
BY _____
(PRINT NAME)

PROPOSED
DESIGN NO. 14-0172
RED-IN YELLOW-OUT

AS INSTALLED
DATE _____
BY _____
(PRINT NAME)

PROPOSED D	M	Y	REVISIONS	D	C	COMPLETED D	M	Y	C
01	09	15	SHOEFLY FOR OVERPASS	NAD	BJW				

REGION SOUTHERN
SUB. WAUKESHA 435
SIGNALS AND COMMUNICATIONS HOMEWOOD
01 SEPTEMBER 2015
DES. NAD
CH. BJW
GCP 4000
SEAR III WITH GFT & CRTU
GRAYSLAKE, IL
WASHINGTON ST
WAU-046.47-08
DOT#689 726P

SIEMENS INDUSTRY INC

DES.: NAD	DATE: 01/09/15	JOB NO.: PWCA10xxx	
CKD.: BJW	ISSUE DATE: N/A	EST. NO.: XP-7958	
DRN.: NAD	PLAN NO.: N/A	SHEET 8 OF 15	
P TIME: 07:49	P DATE: 15-SEP-2015	CAD ID.: WAU-046.47-08	

SIEMENS INDUSTRY INC
LOUISVILLE DIVISION, LOUISVILLE, KY

REVISIONS				
NO.	DATE	BY	DESCRIPTION	APP. BY
1				
2				
3				
4				
5				

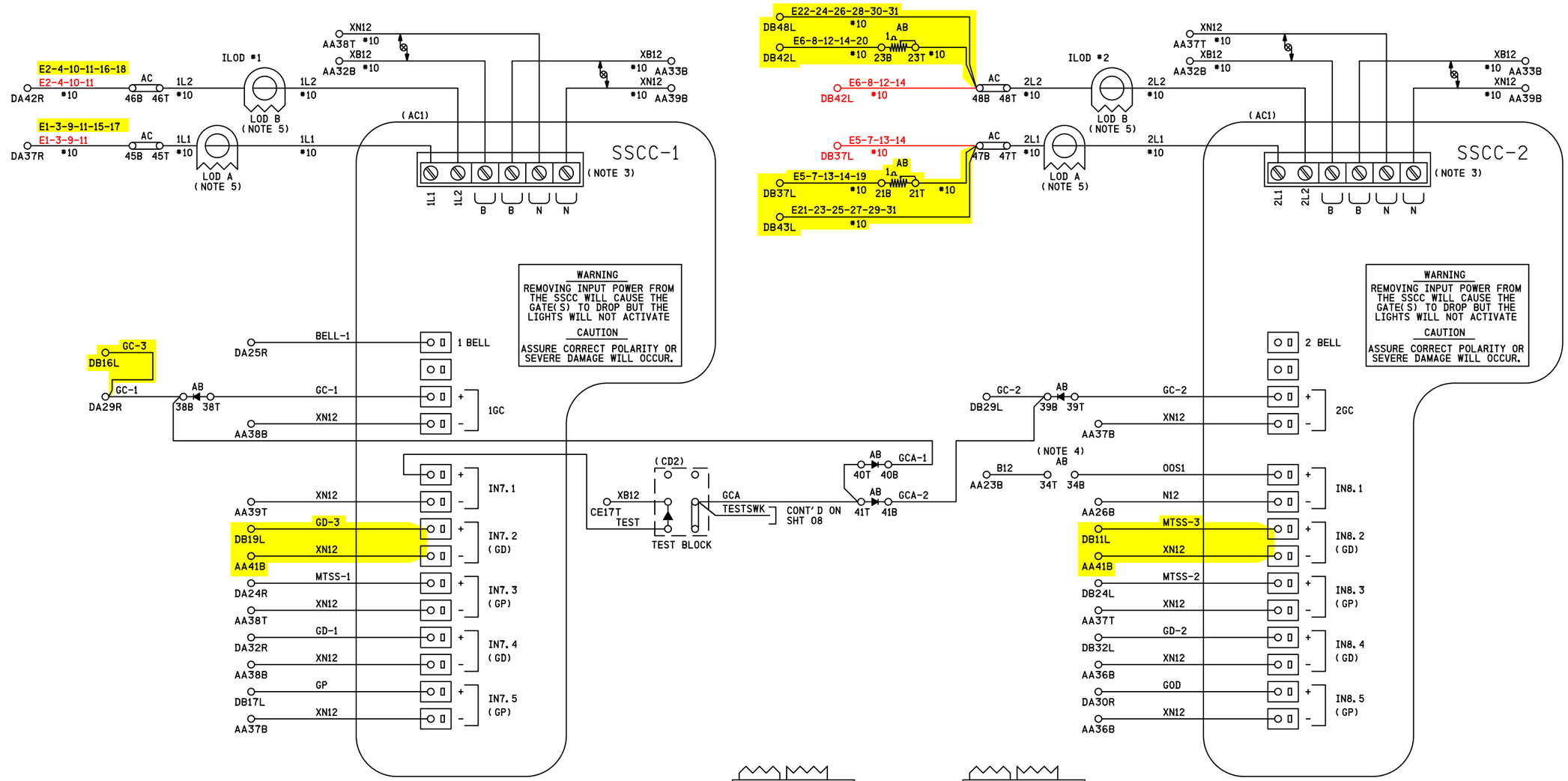

REUSE THE BUNGALOW FROM WAU-048.22 ROLLINS RD

NOTES

1) ALL WIRING TO BE #16 AWG UNLESS OTHERWISE NOTED
2) USE BELDEN CABLE, PART # 8461-u500-60 FOR ALL ECHELON AND LAN WIRING
3) ENSURE CONNECTIONS ARE SECURED IN PLACE BY SCREW LOCKING MECHANISM
4) TO TAKE MAIN TRACK 1 (T1 & T2) OUT OF SERVICE, JUMPER AB34T TO AB34B
5) LOOP WIRE THROUGH LOD TWO (2) TIMES

DENOTES RECTIFIER, SAFETRAN PART # 8002A299006

DENOTES TWISTED PAIR

SII 01 SEP 2015

PROPOSED
DESIGN NO. 14-0172
RED-IN YELLOW-OUT

AS INSTALLED
DATE
BY
(PRINT NAME)

PROPOSED D	M	Y	REVISIONS	D	C	COMPLETED D	M	Y	C
01	09	15	SHOEFLY FOR OVERPASS	NAD	BJW				

REGION SOUTHERN
SUB. WAUKESHA 435
SIGNALS AND COMMUNICATIONS HOMEWOOD
01 SEPTEMBER 2015
DES. NAD
CH. BJW
GCP 4000/SSCCIIII
GATE CONTROLLERS W/ ILODS
GRAYSLAKE, IL
WASHINGTON ST
WAU-046.47-09
DOT#689 726P

SIEMENS INDUSTRY INC

DES.: NAD	DATE: 01/09/15	JOB NO.: PWCA10xxx	
CKD.: BJW	ISSUE DATE: N/A	EST. NO.: XP-7958	
DRN.: NAD	PLAN NO.: N/A	SHEET 9 OF 15	
P TIME: 07:49	P DATE: 15-SEP-2015	CAD ID.: WAU-046.47-09	

SIEMENS INDUSTRY INC
LOUISVILLE DIVISION, LOUISVILLE, KY

wau-046.47-09.dgn
15-SEP-2015

CONTACT	CLOSED AT	FUNCTION
6	70° -90°	POWER DOWN CONTROL
7	0° -89°	POWER UP CONTROL
8	83° -90°	FLASHING LGT. CONTROL
9	5° -90°	BELL CONTROL
10	0° -5°	GATE DOWN INDICATION
11	N/A	SPARE
12	N/A	SPARE

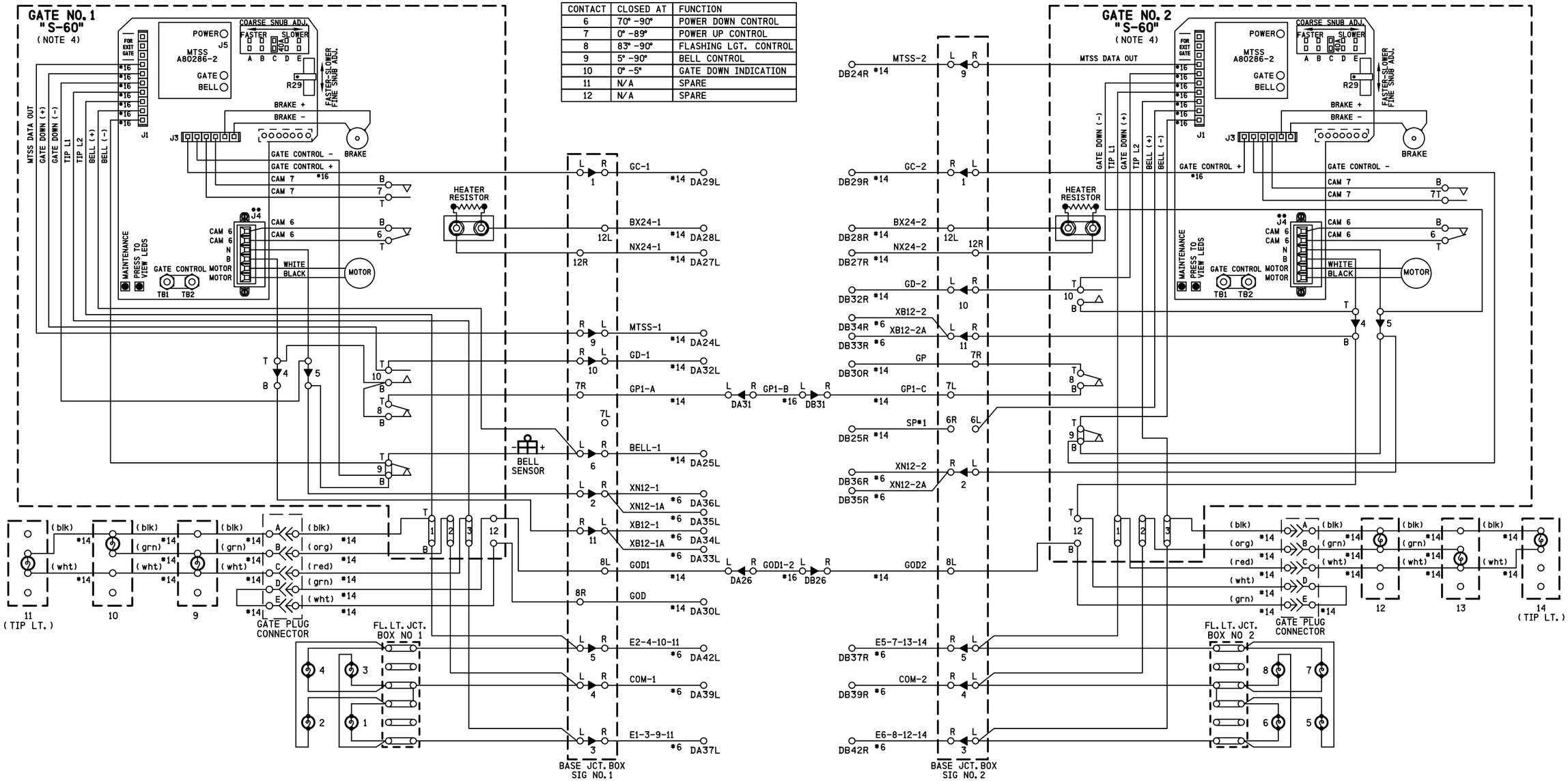

NOTES

1) ON GATE No. 1 ADD JUMPER BETWEEN TERMINALS:
   ADD JUMPER BETWEEN TERMINAL 4T & 10B,
   ADD JUMPER BETWEEN TERMINAL 8B & 10B,
   ADD JUMPER BETWEEN TERMINAL 5B & 9B
2) ON GATE No. 2 ADD JUMPER BETWEEN TERMINALS:
   ADD JUMPER BETWEEN TERMINAL 4T &10B,
   ADD JUMPER BETWEEN TERMINAL 5B & 9B,
   ADD JUMPER BETWEEN TERMINAL 4B & 12T
3) ALL WIRING #10 AWG UNLESS OTHERWISE NOTED
4) GATE DESCENT TIME (RELEASE FROM VERTICAL TO FULLY HORIZONTAL) TO BE WITHIN 11 SECONDS
5) BELL CUT-OUT (5° -90°) WHEN REQUIRED REMOVE STRAP BETWEEN 9B AND 9T
6) ENSURE ALL TERMINALS HAVE TWO SHOULDER NUTS

SII 01 SEP 2015

PROPOSED
DESIGN NO. 14-0172
RED-IN YELLOW-OUT

AS INSTALLED
DATE _____
BY _____
(PRINT NAME)

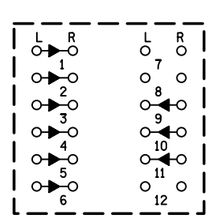

TERMINAL NUMBERING
BASE JCT. BOX 1

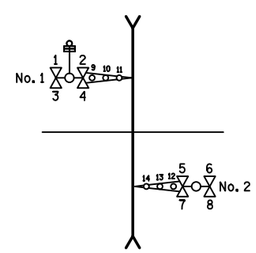

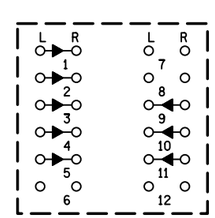

TERMINAL NUMBERING
BASE JCT. BOX 2

PROPOSED D	M	Y	REVISIONS	D	C	COMPLETED D	M	Y	C

REGION SOUTHERN
SUB. WAUKESHA 435

SIGNALS AND COMMUNICATIONS HOMEWOOD
01 SEPTEMBER 2015
DES. NAD
CH. BJW

GATE 1 & 2 MECH. CONTROL CIRCUITS
SAFETRAN S-60
GRAYSLAKE, IL
WASHINGTON ST

WAU-046.47-10

DOT#689 726P

SIEMENS INDUSTRY INC
LOUISVILLE DIVISION, LOUISVILLE, KY

SIEMENS INDUSTRY INC
DES.: N/A | DATE: N/A | JOB NO.: N/A
CKD.: N/A | ISSUE DATE: N/A | EST. NO.: XP-7958
DRN.: N/A | PLAN NO.: N/A | SHEET 10 OF 15
P TIME: 07:49 | P DATE: 15-SEP-2015 | CAD ID.: WAU-046.47-10

REVISIONS
NO. | DATE | BY | DESCRIPTION | APP. BY
1
2
3
4
5

wau-046.47-10.dgn
15-SEP-2015

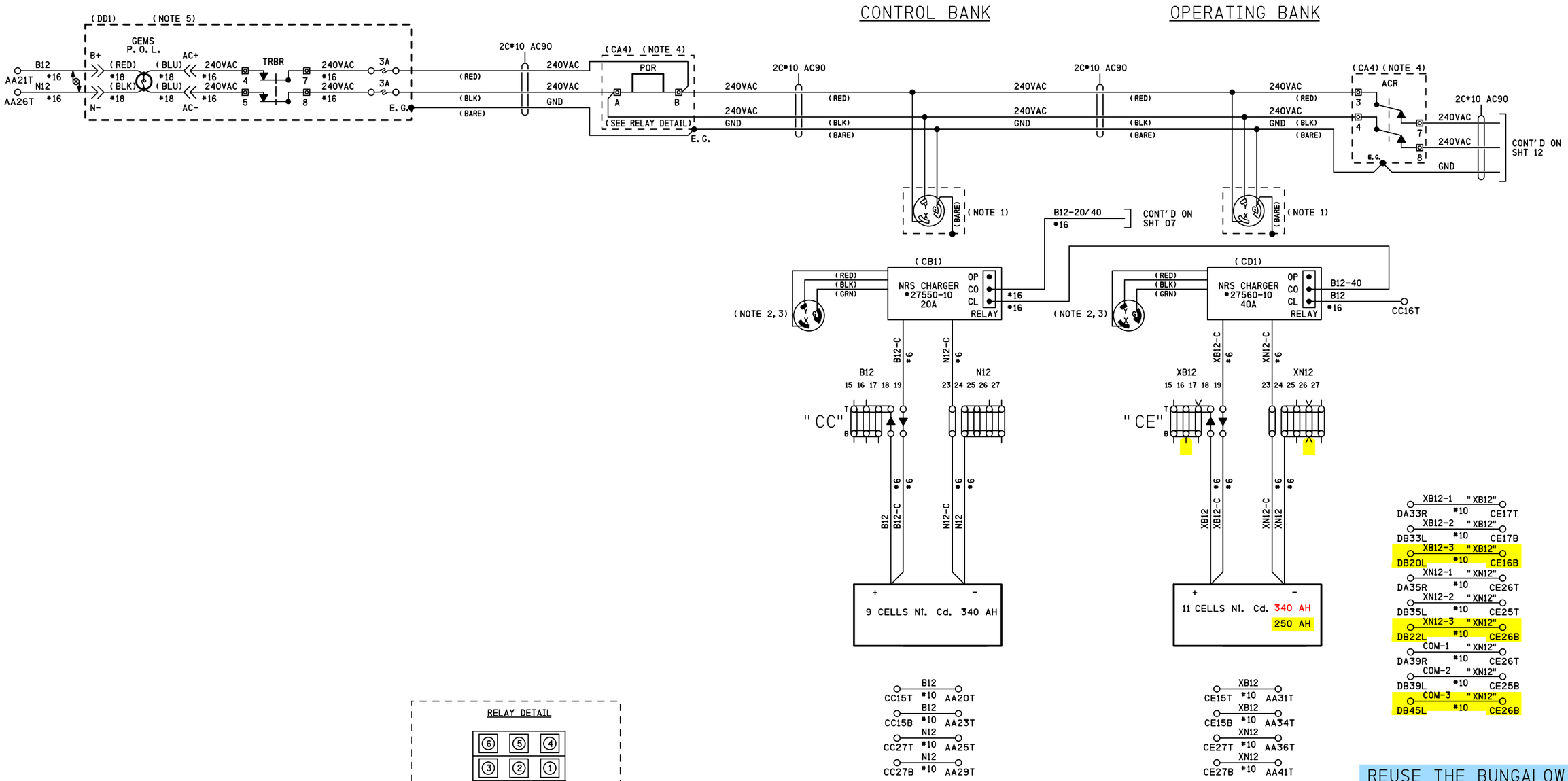

REUSE THE BUNGALOW FROM WAU-048.22 ROLLINS RD

RELAY DETAIL

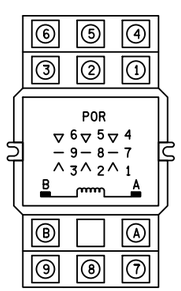

RELAY - POTTER & BRUMFIELD
MODEL KUP-14A15-240 SOCKET MOUNTABLE
240 VAC W/ 3 FORM C CONTACTS

SOCKET - SCREW TERMINAL
MODEL 27E121

NOTES

1) 30A 250V TEST LOCK RECEPTACLE HUBBELL HBL 2620
2) PLUG HUBBELL HBL 2621 REFER TO PS-902 PAGE 6
3) GROUND LUG LOCATED ON CHARGER HOUSING
4) PART OF SEARII POWER CONTROL AND INDICATION RELAY JUNCTION BOX
5) PART OF POWER OFF INDICATOR LIGHT REPEATER RELAY JUNCTION BOX (REFER TO PS-907 SHT 2A)

<< DENOTES WAGO TERMINAL

DENOTES TWISTED PAIR

SII 01 SEP 2015

PROPOSED
DESIGN NO. 14-0172
RED-IN YELLOW-OUT

AS INSTALLED
DATE _____
BY _____
(PRINT NAME)

PROPOSED D	M	Y	REVISIONS	D	C	COMPLETED D	M	Y	C
01	09	15	SHOEFLY FOR OVERPASS	NAD	BJW				

REGION SOUTHERN
SUB. WAUKESHA 435

SIGNALS AND COMMUNICATIONS HOMEWOOD
01 SEPTEMBER 2015
DES. NAD
CH. BJW

DC DISTRIBUTION
GRAYSLAKE, IL
WASHINGTON ST
WAU-046.47-11
DOT#689 726P

SIEMENS INDUSTRY INC
DES.: NAD | DATE: 01/09/15 | JOB NO.: PWCA10xxx
CKD.: BJW | ISSUE DATE: N/A | EST. NO. XP-7958
DRN.: NAD | PLAN NO.: N/A | SHEET 11 OF 15
P. TIME: 07:49 | P. DATE: 15-SEP-2015 | CAD ID.: WAU-046.47-11

NO.	DATE	BY	REVISIONS DESCRIPTION	APP. BY
1				
2				
3				
4				
5				

wau-046.47-11.dgn
15-SEP-2015

SIEMENS INDUSTRY INC
LOUISVILLE DIVISION, LOUISVILLE, KY

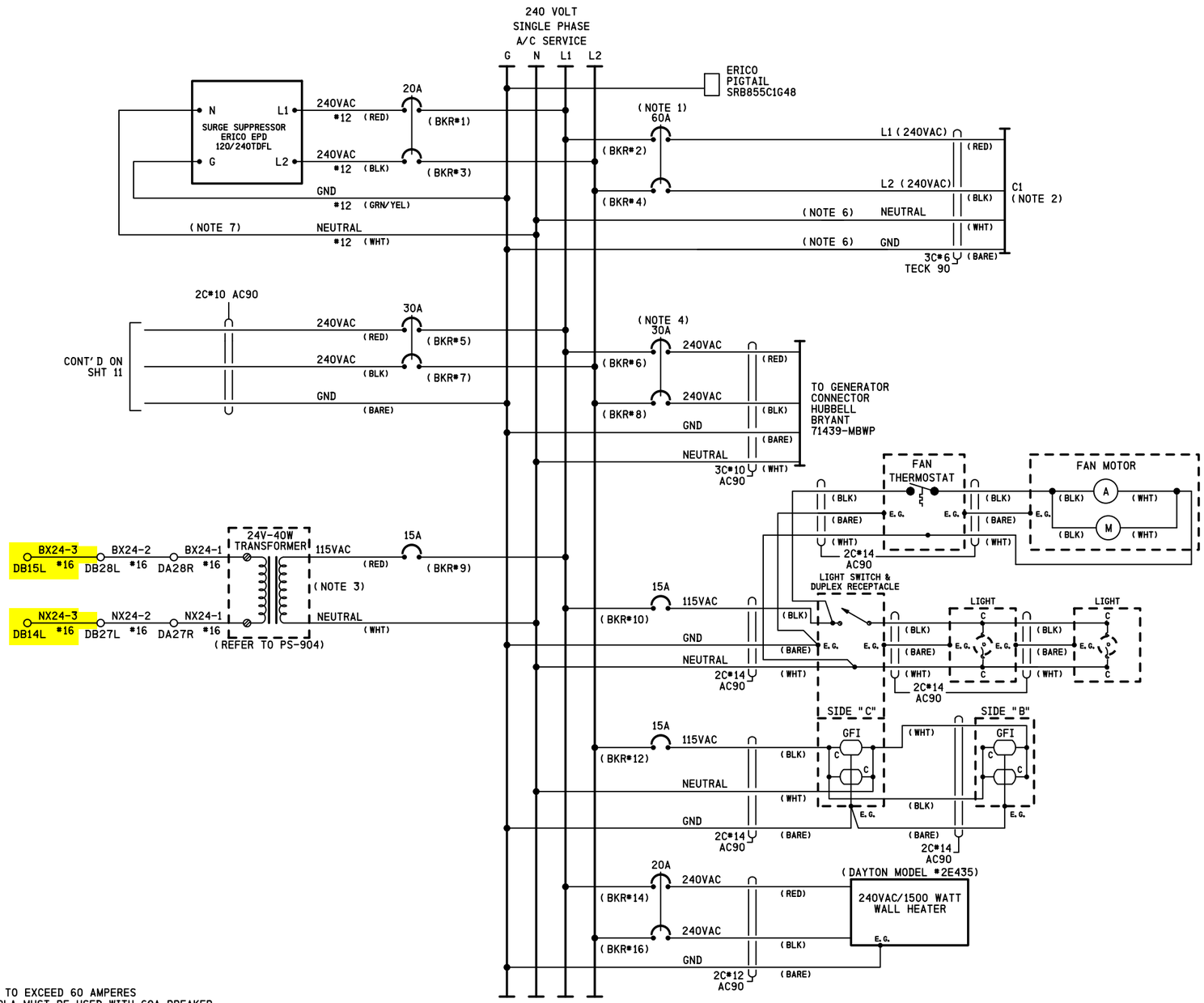

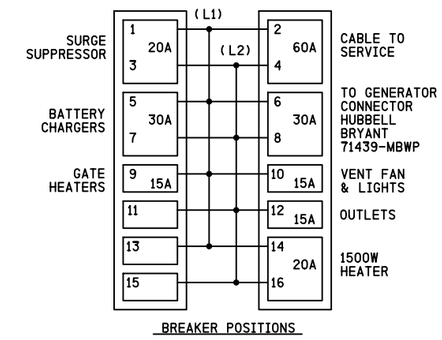

BREAKER POSITIONS

NOTES

1) CIRCUIT BREAKER NOT TO EXCEED 60 AMPERES RETAINING KIT PK4MB2LA MUST BE USED WITH 60A BREAKER
2) FEEDER CIRCUIT BREAKER, AT STUB POLE SERVICE PANEL, NOT TO EXCEED 60 AMPERES
3) 24 VOLT - 40 WATT TRANSFORMER (CN STOCK *02-45-367)
4) A SWITCH TRANSFER KIT MUST BE INSTALLED BETWEEN THE SERVICE DISCONNECT BREAKER AND THE GENERATOR HOOK UP
5) WHERE SEPARATE GROUND WIRE EXISTS BETWEEN THE SERVICE AND THE LOAD CENTER, REMOVE THE BRASS COLORED BONDING SCREW (REFER TO SCHEMATIC ON BOX COVER FOR EXACT LOCATION)
6) S.C.*6 STRANDED, CSA TYPE R90 (X-LINK)
7) KEEP LEADS AS SHORT AS POSSIBLE

REUSE THE BUNGALOW
FROM WAU-048.22
ROLLINS RD

SII 01 SEP 2015

PROPOSED
DESIGN NO. 14-0172
RED-IN YELLOW-OUT

AS INSTALLED
DATE _____
BY _____
(PRINT NAME)

PROPOSED D	M	Y	REVISIONS	D	C	COMPLETED D	M	Y	C
01	09	15	SHOEFLY FOR OVERPASS	NAD	BJW				

REGION SOUTHERN
SUB. WAUKESHA 435
SIGNALS AND COMMUNICATIONS HOMEWOOD
DES. NAD
01 SEPTEMBER 2015
CH. BJW
AC DISTRIBUTION
GRAYSLAKE, IL
WASHINGTON ST
WAU-046.47-12
DOT#689 726P

REVISIONS				
NO.	DATE	BY	DESCRIPTION	APP. BY
1				
2				
3				
4				
5				

SIEMENS INDUSTRY INC

DES.: NAD	DATE: 01/09/15	JOB NO.: PWCA10xxx	
CKD.: BJW	ISSUE DATE: N/A	EST. NO.: XP-7958	
DRN.: NAD	PLAN NO.: N/A	SHEET 12 OF 15	
P TIME: 07:49	P DATE: 15-SEP-2015	CAD ID.: WAU-046.47-12	

SIEMENS INDUSTRY INC
LOUISVILLE DIVISION, LOUISVILLE, KY

wau-046.47-12.dgn
15-SEP-2015

REVISIONS				
NO.	DATE	BY	DESCRIPTION	APP. BY
1				
2				
3				
4				
5				

TOP VIEW:

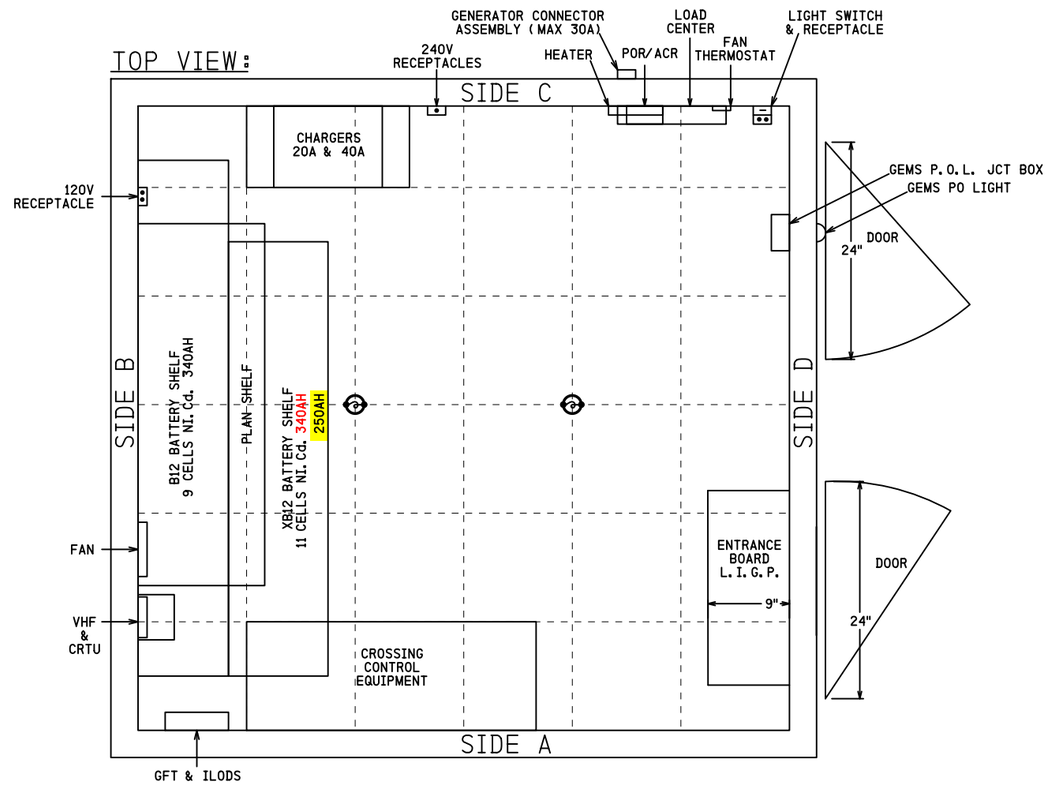

REUSE THE BUNGALOW FROM WAU-048.22 ROLLINS RD

SII 01 SEP 2015

PROPOSED
DESIGN NO. 14-0172
RED-IN YELLOW-OUT

AS INSTALLED
DATE _____
BY _____
(PRINT NAME)

PROPOSED D	PROPOSED M	PROPOSED Y	REVISIONS	D	C	COMPLETED D	COMPLETED M	COMPLETED Y	C
01	09	15	SHOEFLY FOR OVERPASS	NAD	BJW				

REGION SOUTHERN
SUB. WAUKESHA 435

SIGNALS AND COMMUNICATIONS HOMEWOOD
01 SEPTEMBER 2015
DES. NAD
CH. BJW

BUNGALOW LAYOUT TOP VIEW

GRAYSLAKE, IL
WASHINGTON ST

WAU-046.47-13

DOT#689 726P

SIEMENS INDUSTRY INC			
DES.: NAD	DATE: 01/09/15	JOB NO.: PWCA10xxx	
CKD.: BJW	ISSUE DATE: N/A	EST. NO.: XP-7958	
DRN.: NAD	PLAN NO.: N/A	SHEET 13 OF 15	
P TIME: 07:49	P DATE: 15-SEP-2015	CAD ID.: WAU-046.47-13	

SIEMENS INDUSTRY INC
LOUISVILLE DIVISION, LOUISVILLE, KY

wau-046.47-13.dgn
15-SEP-2015

REVISIONS				
NO.	DATE	BY	DESCRIPTION	APP. BY
1				
2				
3				
4				
5				

ENTRANCE BOARD L. I. G. P.

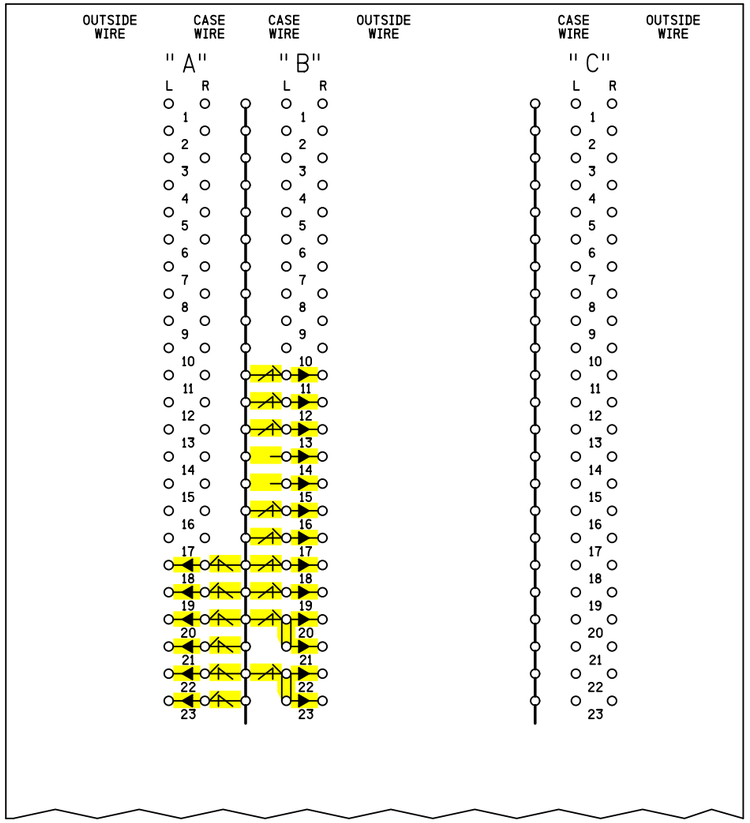

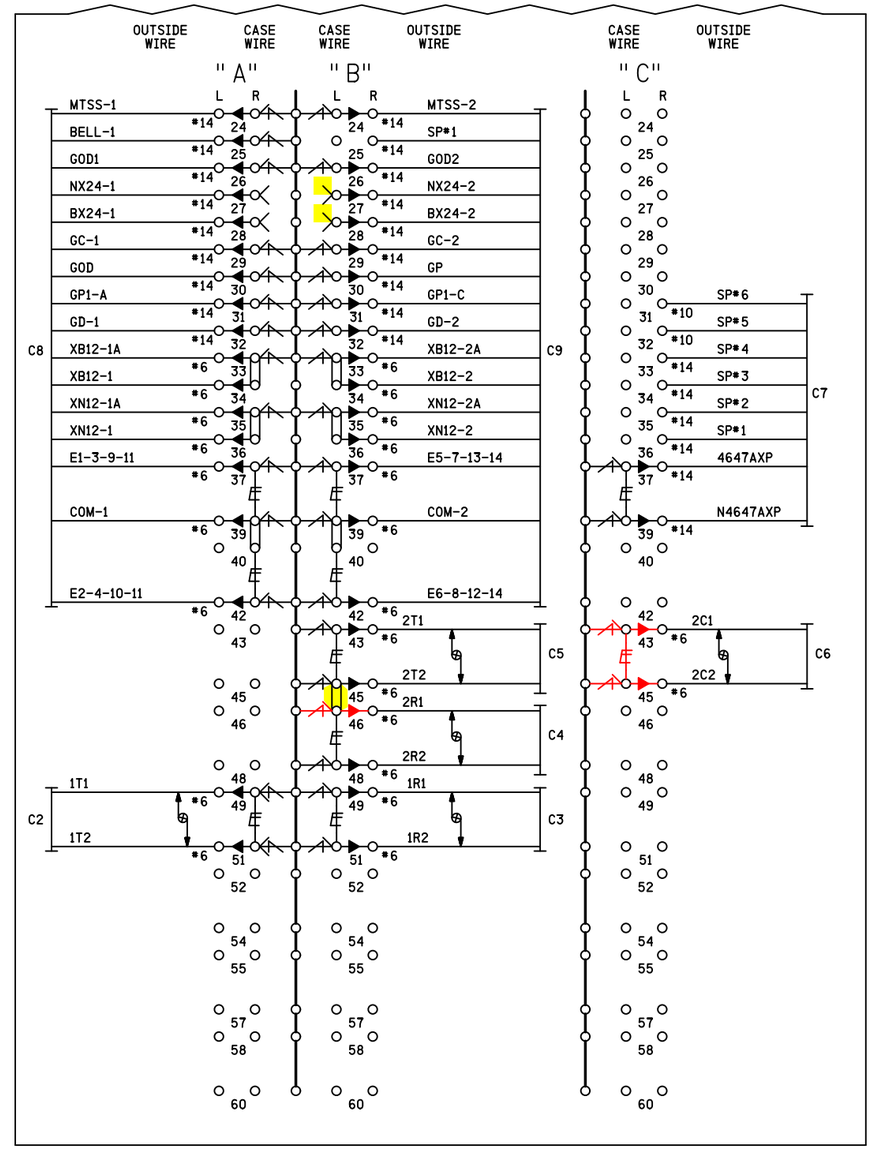

SIDE VIEW: SIDE D

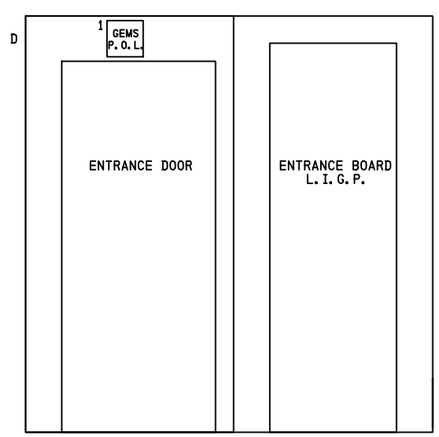

(DD1)

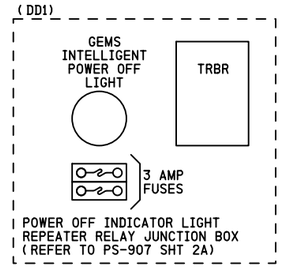

NOTES

- DENOTES EQUALIZER — REFER TO SCP-1102 FOR EQUALIZER TYPE TO BE USED
- DENOTES LIGHTNING ARRESTOR — REFER TO SCP-1102 FOR ARRESTOR TYPE TO BE USED
- DENOTES GROUND PLANE
- DENOTES TWISTED PAIR

REUSE THE BUNGALOW FROM WAU-048.22 ROLLINS RD

SII 01 SEP 2015

PROPOSED
DESIGN NO. 14-0172
RED-IN YELLOW-OUT

AS INSTALLED
DATE _____
BY _____
(PRINT NAME)

PROPOSED D	PROPOSED M	PROPOSED Y	REVISIONS	D	C	COMPLETED D	COMPLETED M	COMPLETED Y	C
01	09	15	SHOEFLY FOR OVERPASS	NAD	BJW				

REGION SOUTHERN
SUB. WAUKESHA 435

SIGNALS AND COMMUNICATIONS HOMEWOOD
01 SEPTEMBER 2015
DES. NAD
CH. BJW

BUNGALOW LAYOUT SIDE D
& L.I.G.P.
GRAYSLAKE, IL
WASHINGTON ST

WAU-046.47-14

DOT#689 726P

SIEMENS INDUSTRY INC

DES.: NAD	DATE: 01/09/15	JOB NO.: PWCA10xxx	
CKD.: BJW	ISSUE DATE: N/A	EST. NO.: XP-7958	
DRN.: NAD	PLAN NO.: N/A	SHEET 14 OF 15	
P TIME: 07:50	P DATE: 15-SEP-2015	CAD ID.: WAU-046.47-14	

SIEMENS INDUSTRY INC
LOUISVILLE DIVISION, LOUISVILLE, KY

wau-046.47-14.dgn
15-SEP-2015

NO.	DATE	BY	DESCRIPTION	APP. BY
1				
2				
3				
4				
5				

REVISIONS

"AA"

"AB"

"AC"

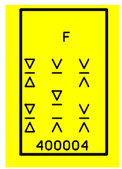

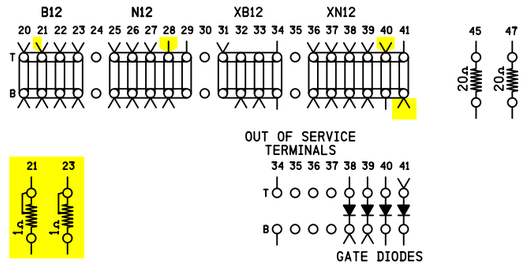

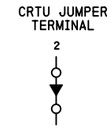

SIDE A

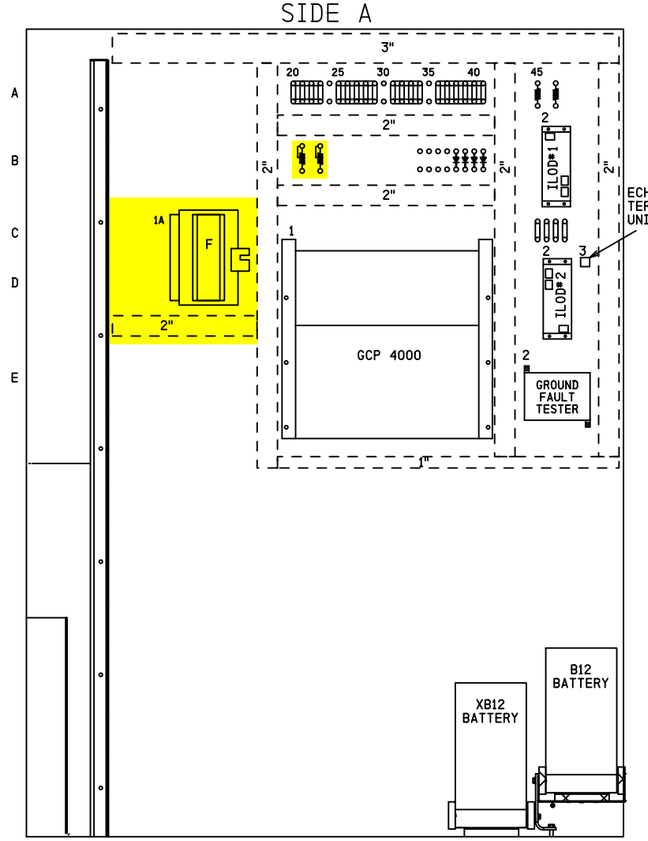

SIDE B

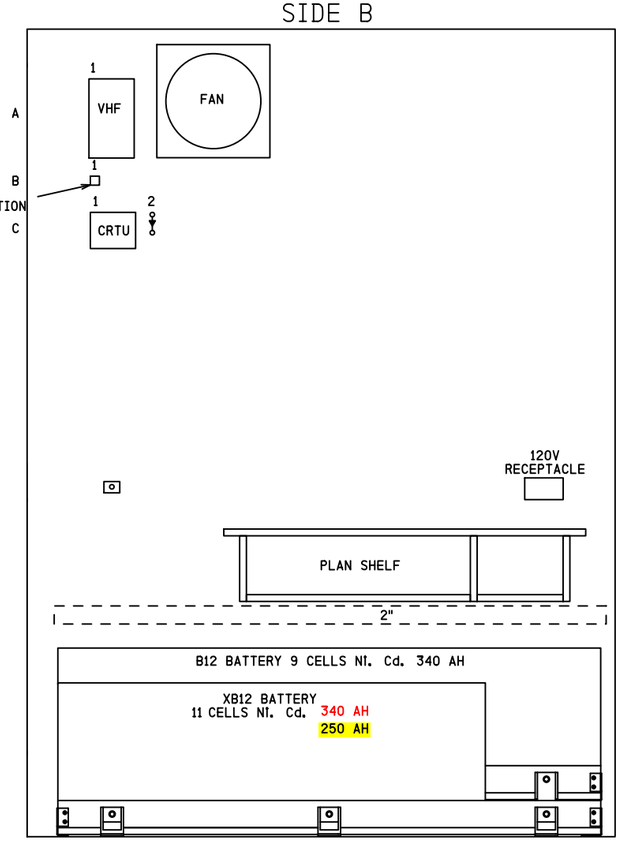

SIDE C

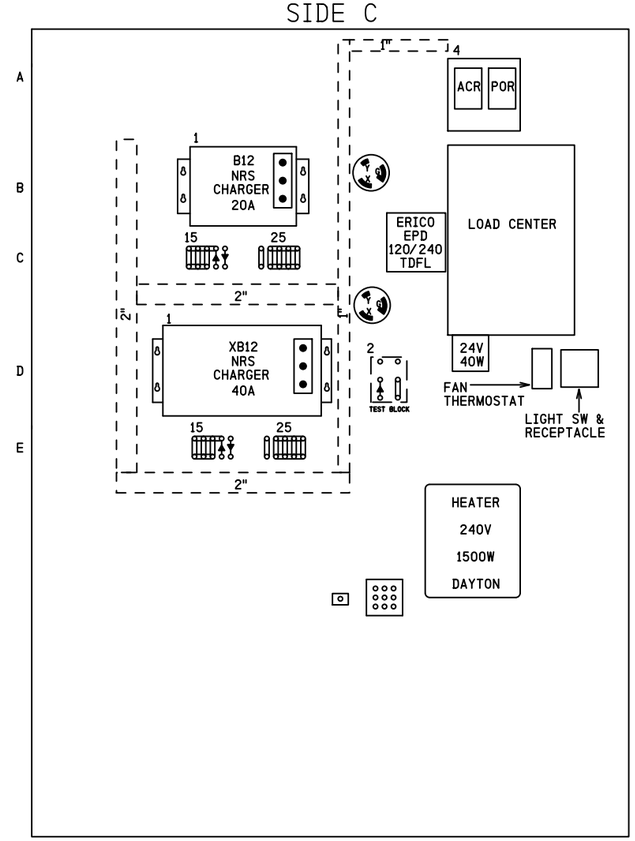

NOTES

1) SURGE PROTECTION SHOULD BE BONDED TO BUNGALOW

REPRESENTS PANDUIT

DENOTES RECTIFIER (SAFETRAN #8008A299006)

REUSE THE BUNGALOW FROM WAU-048.22 ROLLINS RD

SII 01 SEP 2015

PROPOSED
DESIGN NO. 14-0172
RED-IN YELLOW-OUT

AS INSTALLED
DATE
BY
(PRINT NAME)

PROPOSED D	PROPOSED M	PROPOSED Y	REVISIONS	D	C	COMPLETED D	COMPLETED M	COMPLETED Y	C
01	09	15	SHOEFLY FOR OVERPASS	NAD	BJW				

REGION SOUTHERN
SUB. WAUKESHA 435

SIGNALS AND COMMUNICATIONS HOMEWOOD
01 SEPTEMBER 2015
DES. NAD
CH. BJW

BUNGALOW LAYOUT SIDES A, B & C

GRAYSLAKE, IL
WASHINGTON ST

WAU-046.47-15

DOT#689 726P

16

SIEMENS INDUSTRY INC

DES.: NAD	DATE: 01/09/15	JOB NO.: PWCA10xxx	
CKD.: BJW	ISSUE DATE: N/A	EST. NO.: XP-7958	
DRN.: NAD	PLAN NO.: N/A	SHEET 15 OF 15	
P TIME: 07:50	P DATE: 15-SEP-2015	CAD ID.: WAU-046.47-15	

SIEMENS INDUSTRY INC
LOUISVILLE DIVISION, LOUISVILLE, KY

wau-046.47-15.dgn
15-SEP-2015