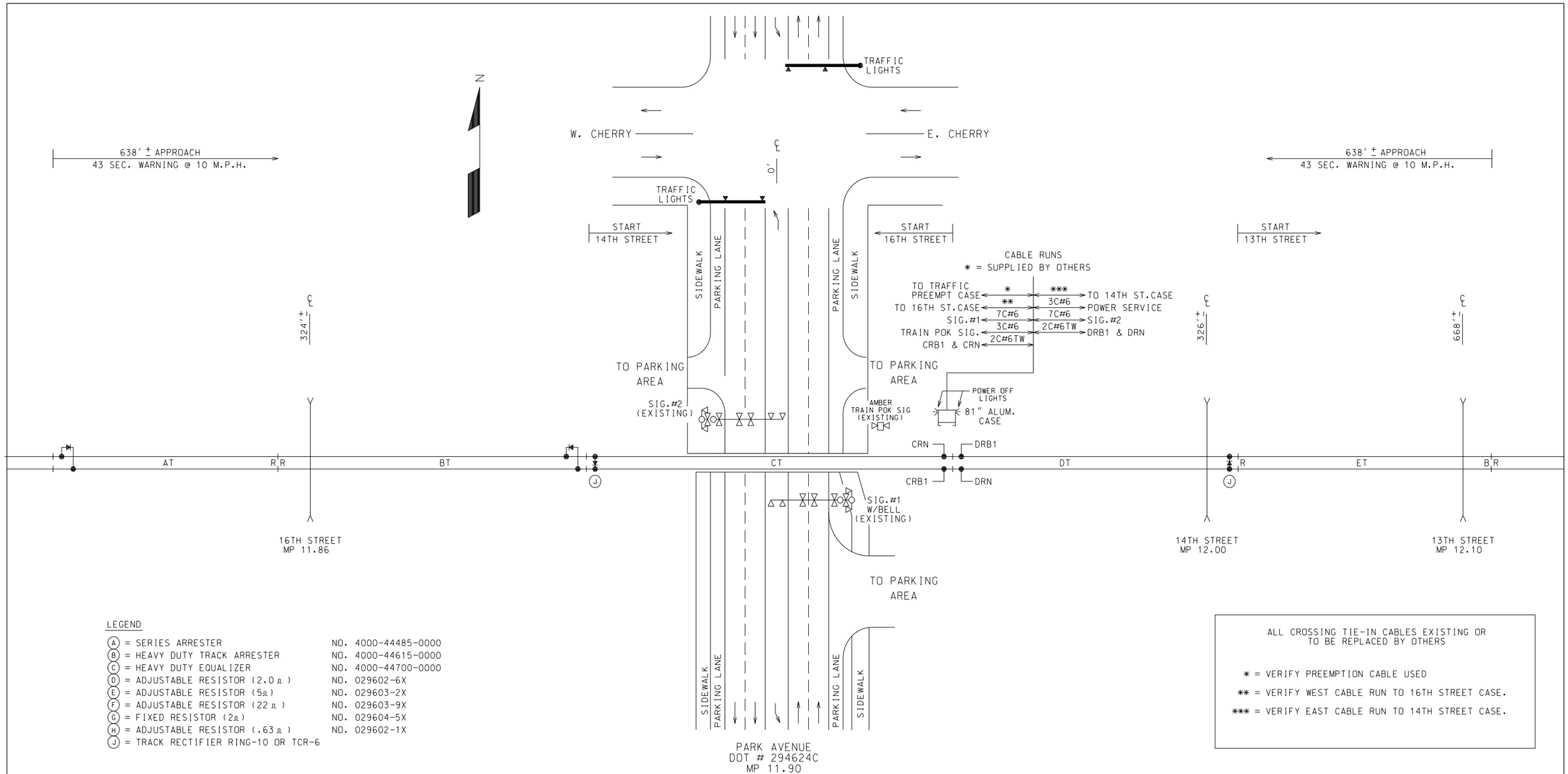

LEGEND

(A) = SERIES ARRESTER	NO. 4000-44485-0000
(B) = HEAVY DUTY TRACK ARRESTER	NO. 4000-44615-0000
(C) = HEAVY DUTY EQUALIZER	NO. 4000-44700-0000
(D) = ADJUSTABLE RESISTOR (2.0 Ω)	NO. 029602-6X
(E) = ADJUSTABLE RESISTOR (5 Ω)	NO. 029603-2X
(F) = ADJUSTABLE RESISTOR (22 Ω)	NO. 029603-9X
(G) = FIXED RESISTOR (2 Ω)	NO. 029604-5X
(H) = ADJUSTABLE RESISTOR (.63 Ω)	NO. 029602-1X
(J) = TRACK RECTIFIER RING-10 OR TCR-6	

NOTES:

1) ALL DIMENSIONS ARE APPROXIMATE AND MAY VARY DUE TO ACTUAL FIELD CONDITIONS.
2) SIGNALS AND CASE TO BE INSTALLED PER MUTCD, STATE AND OR RAILROAD STANDARDS.
3) DESIGN BASED ON REUSING EXISTING INSULATED JOINTS. ANY POOR TRACK INSULATION MATERIAL BY OTHERS.
4) SIMULTANEOUS TRAFFIC PREEMPTION CABLE AND ADJACENT CROSSING TIE-IN CABLES TO BE REUSED OR REPLACED BY OTHERS.

ALL CROSSING TIE-IN CABLES EXISTING OR TO BE REPLACED BY OTHERS

* = VERIFY PREEMPTION CABLE USED

** = VERIFY WEST CABLE RUN TO 16TH STREET CASE.

*** = VERIFY EAST CABLE RUN TO 14TH STREET CASE.

LOCATION PLAN
NOT TO SCALE

NO.	DATE	BY	DESCRIPTION	APP. BY

REVISIONS

THE OPERATION OF THE ORGANIZATION REPRESENTED HEREON CANNOT BE CHECKED FINALLY UNTIL ALL CIRCUITS AND DEVICES ARE CONNECTED TO FORM A COMPLETE SYSTEM OR AN EFFECTIVE PORTION THEREOF. SUCH SYSTEM OR PORTION MUST BE GIVEN COMPLETE CIRCUIT AND OPERATIONAL TEST BEFORE BEING PLACED IN REGULAR OPERATION.

PLOT DATE:$$PLOT_DATE PLOT TIME:$TIME

SIEMENS
RAIL AUTOMATION
2400 NELSON MILLER PARKWAY
LOUISVILLE, KENTUCKY 40223

TITLE:
HIGHWAY GRADE CROSSING SIGNAL SYSTEM
PARK AVENUE - HERRIN, IL.
DOT 294624C - M.P. 11.90

CUSTOMER:
SNC SOLUTIONS
FOR
CRAB ORCHARD AND EGYPTIAN RR

DES.: DAD	DATE: 05/05/14	PROJ. NO.: PMIA10323
CKD.: JTB	ISSUE DATE:	EST. NO.: XP-7313
DRN.: SRM	CAD ID.:pmia10323.01	SHEET 1 OF 7

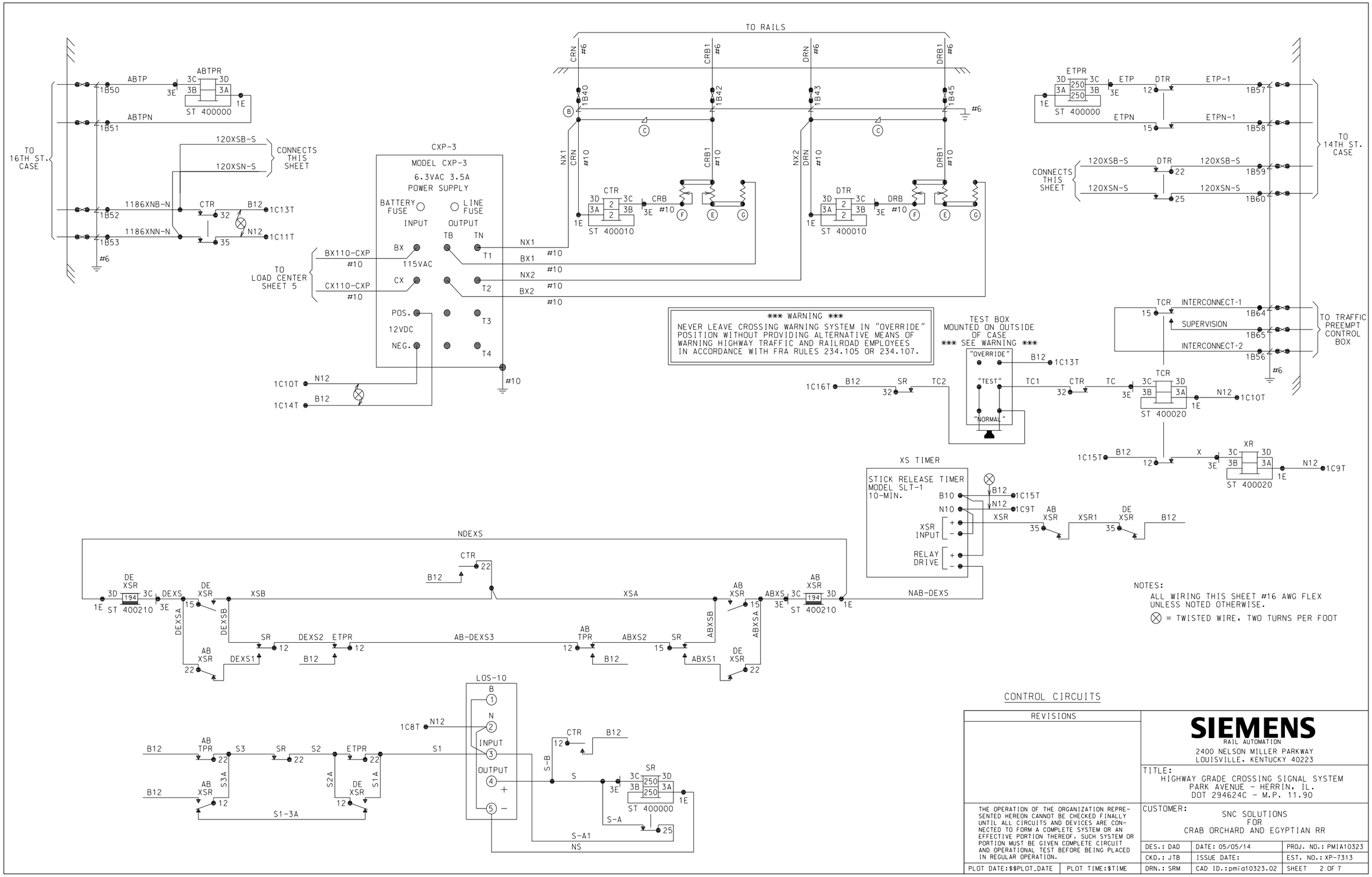

CONTROL CIRCUITS

NO.	DATE	BY	DESCRIPTION	APP. BY

REVISIONS

THE OPERATION OF THE ORGANIZATION REPRESENTED HEREON CANNOT BE CHECKED FINALLY UNTIL ALL CIRCUITS AND DEVICES ARE CONNECTED TO FORM A COMPLETE SYSTEM OR AN EFFECTIVE PORTION THEREOF. SUCH SYSTEM OR PORTION MUST BE GIVEN COMPLETE CIRCUIT AND OPERATIONAL TEST BEFORE BEING PLACED IN REGULAR OPERATION.

PLOT DATE:$$PLOT_DATE PLOT TIME:$TIME

SIEMENS
RAIL AUTOMATION
2400 NELSON MILLER PARKWAY
LOUISVILLE, KENTUCKY 40223

TITLE:
HIGHWAY GRADE CROSSING SIGNAL SYSTEM
PARK AVENUE - HERRIN, IL.
DOT 294624C - M.P. 11.90

CUSTOMER:
SNC SOLUTIONS
FOR
CRAB ORCHARD AND EGYPTIAN RR

DES.: DAD	DATE: 05/05/14	PROJ. NO.: PMIA10323
CKD.: JTB	ISSUE DATE:	EST. NO.: XP-7313
DRN.: SRM	CAD ID.:pmia10323.02	SHEET 2 OF 7

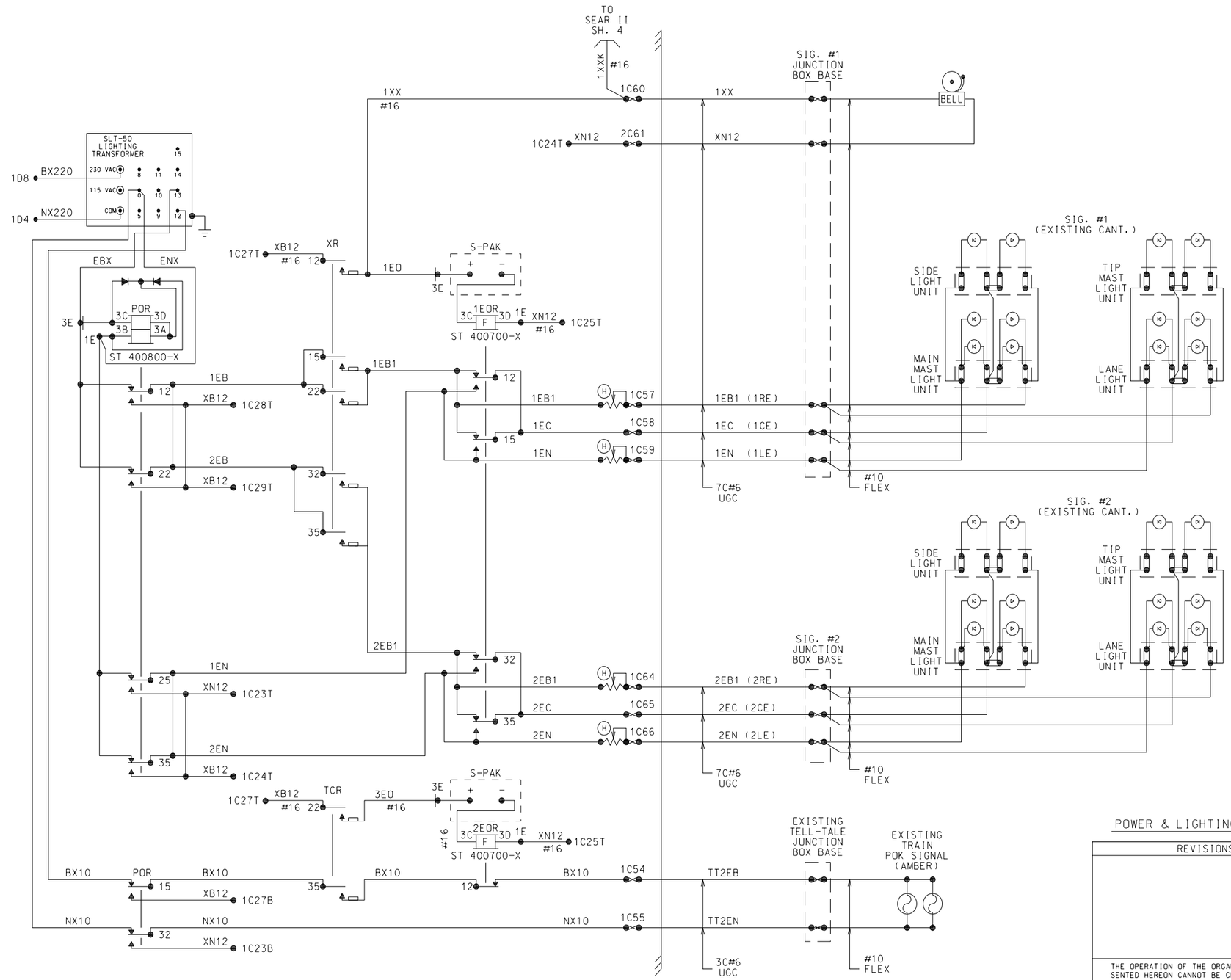

NOTE:
ALL WIRE THIS SHEET TO BE NO. 10 AWG. FLEX UNLESS OTHERWISE NOTED.

POWER & LIGHTING CIRCUITS

NO.	DATE	BY	DESCRIPTION	APP. BY
				BJW
				BJW

REVISIONS

SIEMENS
RAIL AUTOMATION
2400 NELSON MILLER PARKWAY
LOUISVILLE, KENTUCKY 40223

TITLE:
HIGHWAY GRADE CROSSING SIGNAL SYSTEM
PARK AVENUE - HERRIN, IL.
DOT 294624C - M.P. 11.90

THE OPERATION OF THE ORGANIZATION REPRESENTED HEREON CANNOT BE CHECKED FINALLY UNTIL ALL CIRCUITS AND DEVICES ARE CONNECTED TO FORM A COMPLETE SYSTEM OR AN EFFECTIVE PORTION THEREOF. SUCH SYSTEM OR PORTION MUST BE GIVEN COMPLETE CIRCUIT AND OPERATIONAL TEST BEFORE BEING PLACED IN REGULAR OPERATION.

CUSTOMER:
SNC SOLUTIONS
FOR
CRAB ORCHARD AND EGYPTIAN RR

DES.: DAD	DATE: 05/05/14	PROJ. NO.: PMIA10323
CKD.: JTB	ISSUE DATE:	EST. NO.: XP-7313
DRN.: SRM	CAD ID.: pmia10323.03	SHEET 3 OF 7

PLOT DATE:$$PLOT_DATE PLOT TIME:$TIME

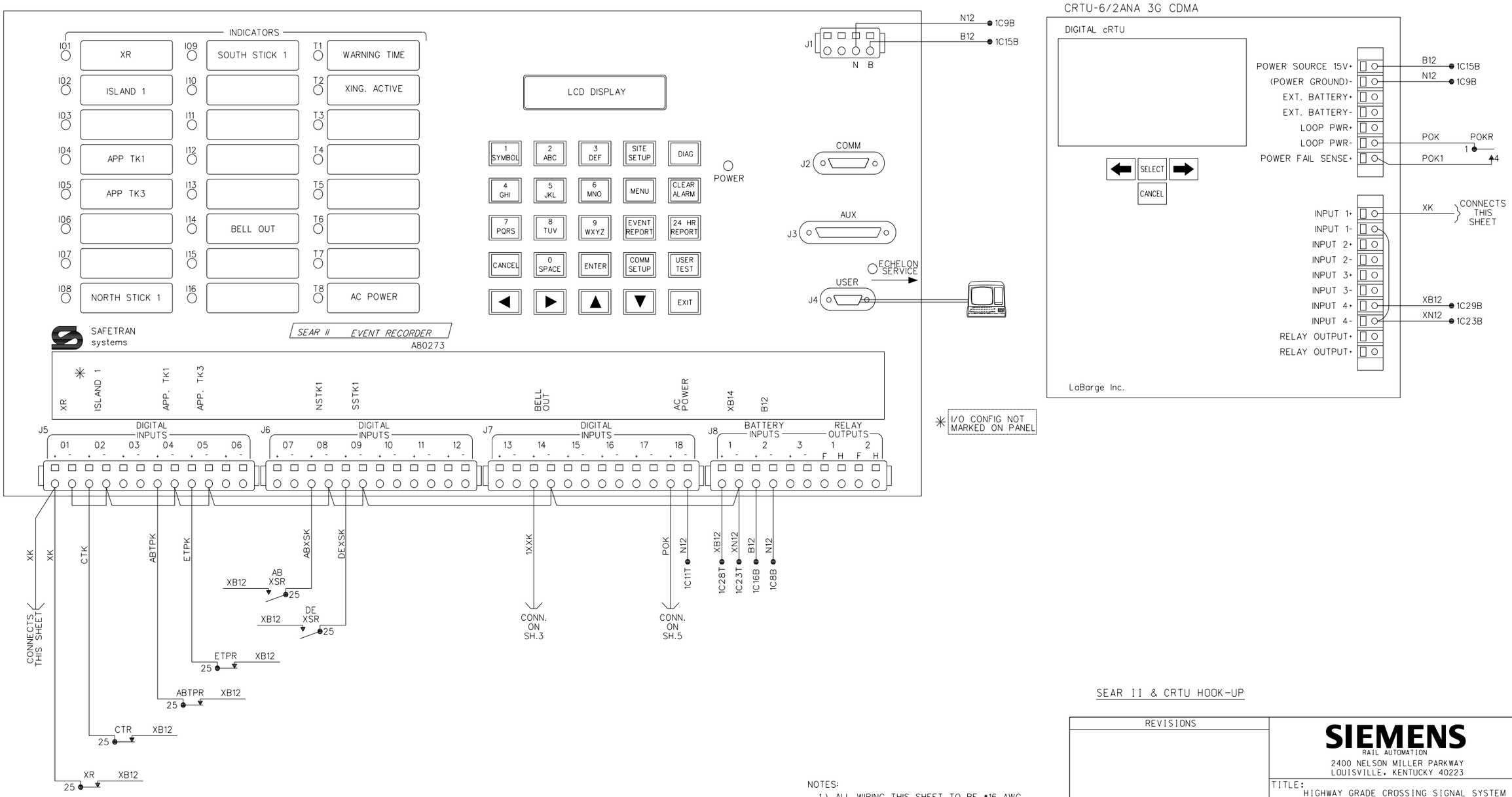

SEAR II & CRTU HOOK-UP

NOTES:
1.) ALL WIRING THIS SHEET TO BE #16 AWG.

NO.	DATE	BY	DESCRIPTION	APP. BY

REVISIONS

THE OPERATION OF THE ORGANIZATION REPRESENTED HEREON CANNOT BE CHECKED FINALLY UNTIL ALL CIRCUITS AND DEVICES ARE CONNECTED TO FORM A COMPLETE SYSTEM OR AN EFFECTIVE PORTION THEREOF. SUCH SYSTEM OR PORTION MUST BE GIVEN COMPLETE CIRCUIT AND OPERATIONAL TEST BEFORE BEING PLACED IN REGULAR OPERATION.

PLOT DATE:$$PLOT_DATE PLOT TIME:$TIME

SIEMENS
RAIL AUTOMATION
2400 NELSON MILLER PARKWAY
LOUISVILLE, KENTUCKY 40223

TITLE:
HIGHWAY GRADE CROSSING SIGNAL SYSTEM
PARK AVENUE - HERRIN, IL.
DOT # 294624C - MP 11.90

CUSTOMER:
SNC SOLUTIONS
FOR CRAB ORCHARD AND EGYPTIAN RAILROAD

DES.: DAD	DATE: 05/05/14	PROJ. NO.: PMIA10323
CKD.: JTB	ISSUE DATE:	EST. NO.: XP-7313
DRN.: DAD	CAD ID.: PMIA10323.04	SHEET 4 OF 7

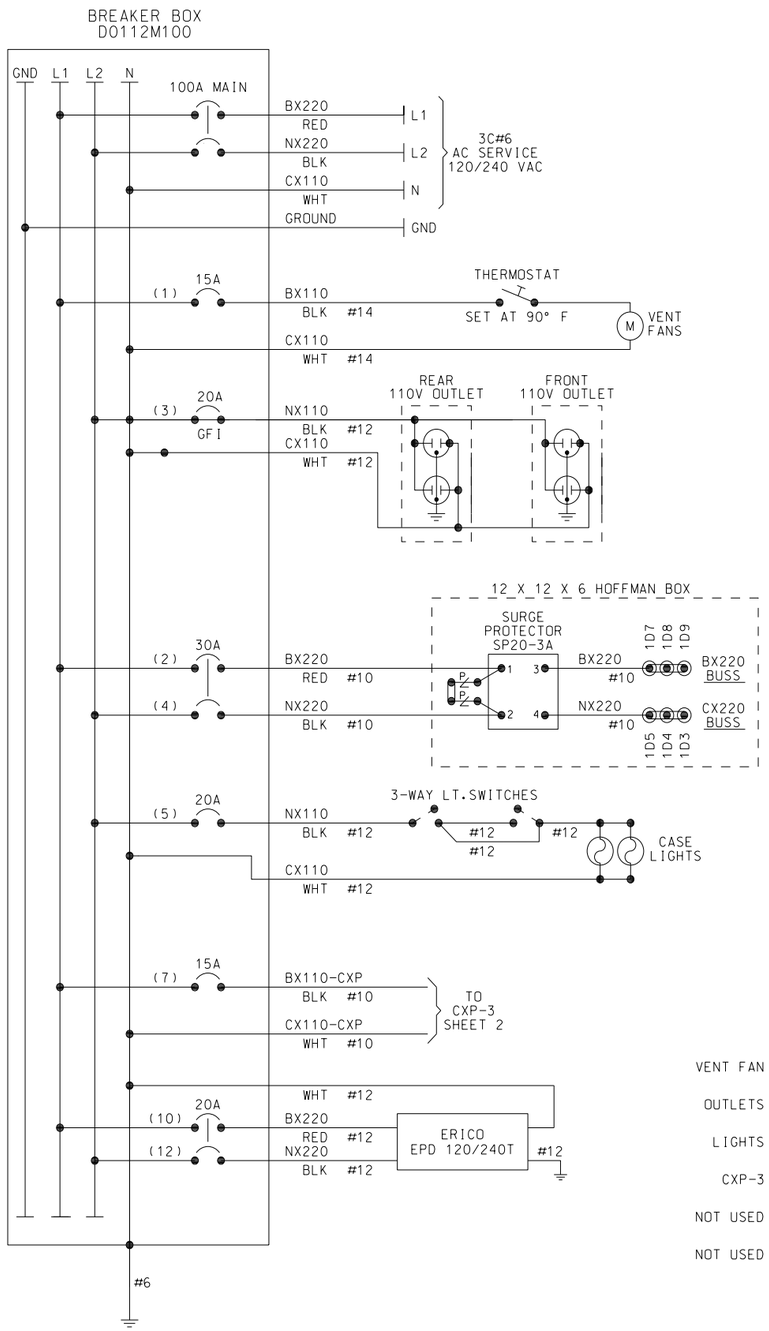

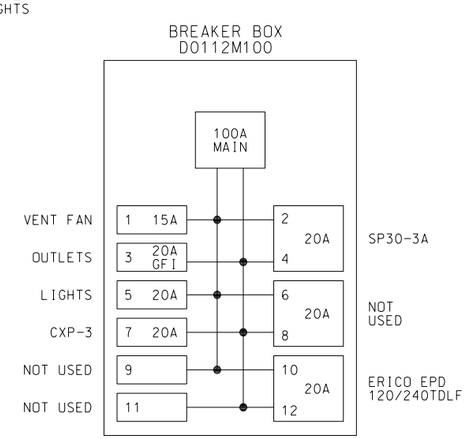

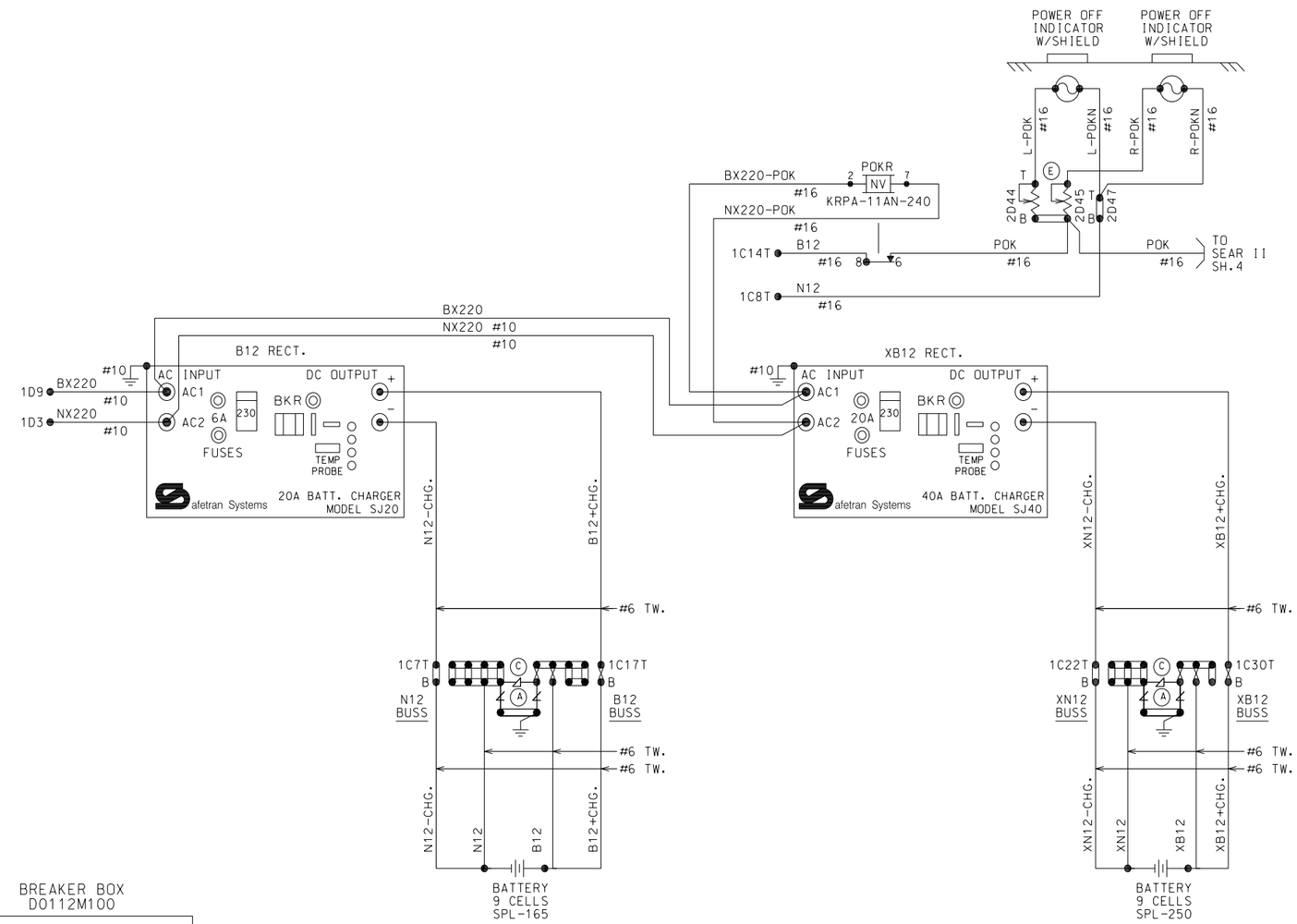

NOTES:

ALL WIRING AS NOTED THIS SHEET.

⊗ = TWISTED WIRE, TWO TURNS PER FOOT

POWER DISTRIBUTION

NO.	DATE	BY	DESCRIPTION	APP.	BY

REVISIONS

THE OPERATION OF THE ORGANIZATION REPRESENTED HEREON CANNOT BE CHECKED FINALLY UNTIL ALL CIRCUITS AND DEVICES ARE CONNECTED TO FORM A COMPLETE SYSTEM OR AN EFFECTIVE PORTION THEREOF. SUCH SYSTEM OR PORTION MUST BE GIVEN COMPLETE CIRCUIT AND OPERATIONAL TEST BEFORE BEING PLACED IN REGULAR OPERATION.

PLOT DATE:$$PLOT_DATE PLOT TIME:$TIME

SIEMENS
RAIL AUTOMATION
2400 NELSON MILLER PARKWAY
LOUISVILLE, KENTUCKY 40223

TITLE:
HIGHWAY GRADE CROSSING SIGNAL SYSTEM
PARK AVENUE - HERRIN, IL
DOT 294624C - M.P. 11.90

CUSTOMER:
SNC SOLUTIONS
FOR
CRAB ORCHARD AND EGYPTIAN RR

DES.: DAD	DATE: 05/05/14	PROJ. NO.: PMIA10323
CKD.: JTB	ISSUE DATE:	EST. NO.: XP-7313
DRN.: SRM	CAD ID.:pmia10323.05	SHEET 5 OF 7

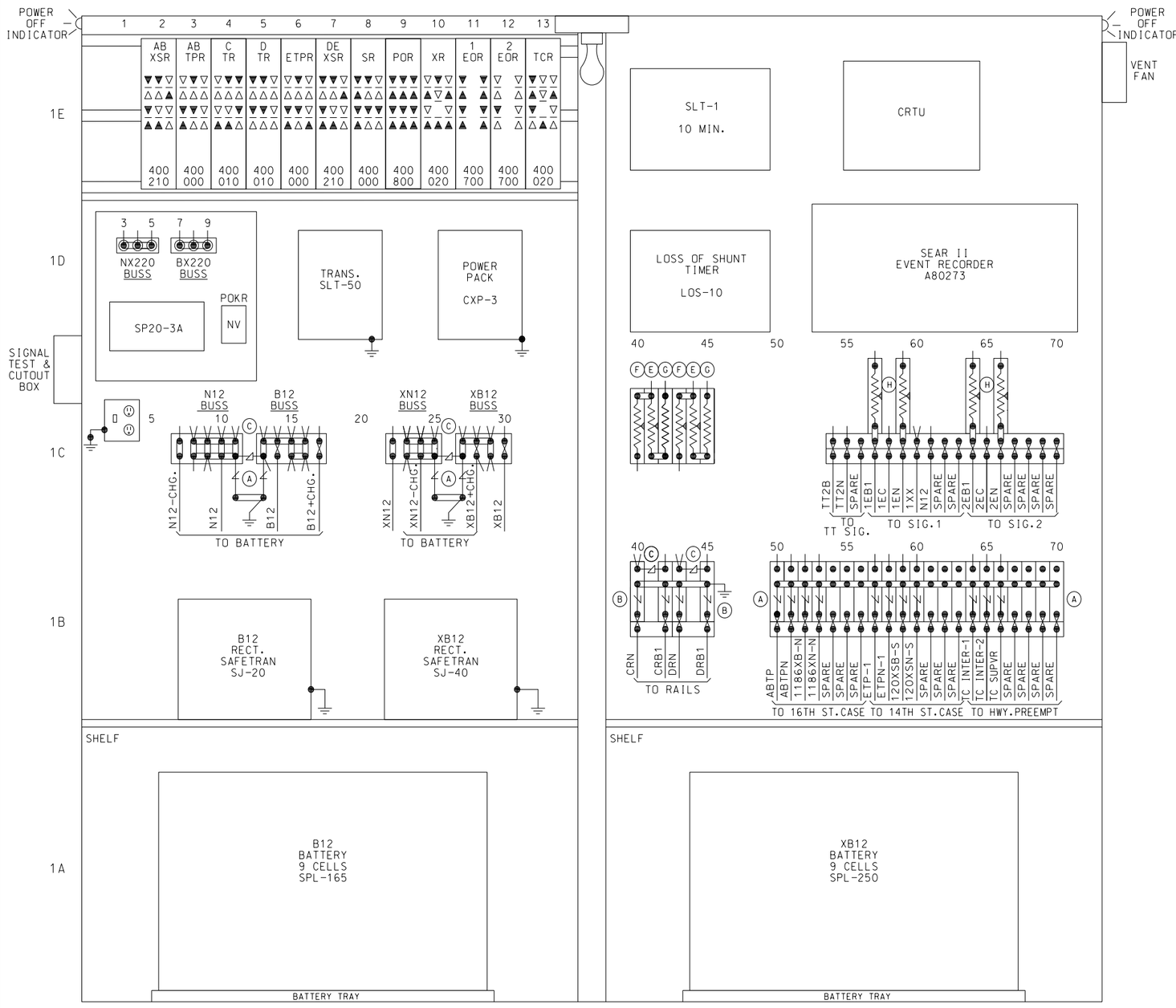

CASE LAYOUT
(FRONT VIEW)

ENERGY LOOPS

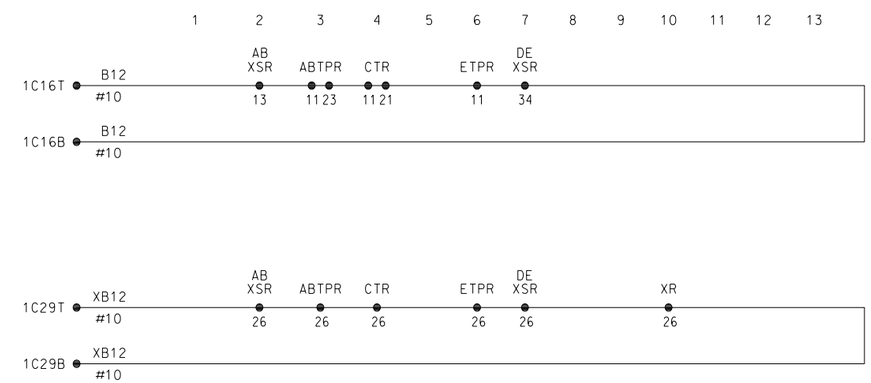

NOTES:

1.) POWER OFF RESISTORS & TERMINAL TO BE LOCATED IN REAR OF CASE.

2.) INSTALL FIBER GUARDS BETWEEN ADJACENT ADJUSTABLE RESISTORS.

3.) USE INSULATED NUTS ON ALL EXPOSED AC TERMINALS.

CASE LAYOUT (FRONT VIEW)
NOT TO SCALE

NO.	DATE	BY	DESCRIPTION	APP. BY

REVISIONS

THE OPERATION OF THE ORGANIZATION REPRESENTED HEREON CANNOT BE CHECKED FINALLY UNTIL ALL CIRCUITS AND DEVICES ARE CONNECTED TO FORM A COMPLETE SYSTEM OR AN EFFECTIVE PORTION THEREOF. SUCH SYSTEM OR PORTION MUST BE GIVEN COMPLETE CIRCUIT AND OPERATIONAL TEST BEFORE BEING PLACED IN REGULAR OPERATION.

PLOT DATE:$$PLOT_DATE PLOT TIME:$TIME

SIEMENS
RAIL AUTOMATION
2400 NELSON MILLER PARKWAY
LOUISVILLE, KENTUCKY 40223

TITLE:
HIGHWAY GRADE CROSSING SIGNAL SYSTEM
PARK AVENUE - HERRIN, IL.
DOT294624C - M.P. 11.90

CUSTOMER:
SNC SOLUTIONS
FOR
CRAB ORCHARD AND EGYPTIAN RR

DES.: DAD	DATE: 05/05/14	PROJ. NO.: PMIA10323
CKD.: JTB	ISSUE DATE:	EST. NO.: XP-7313
DRN.: SRM	CAD ID.:pmia10323.06	SHEET 6 OF 7

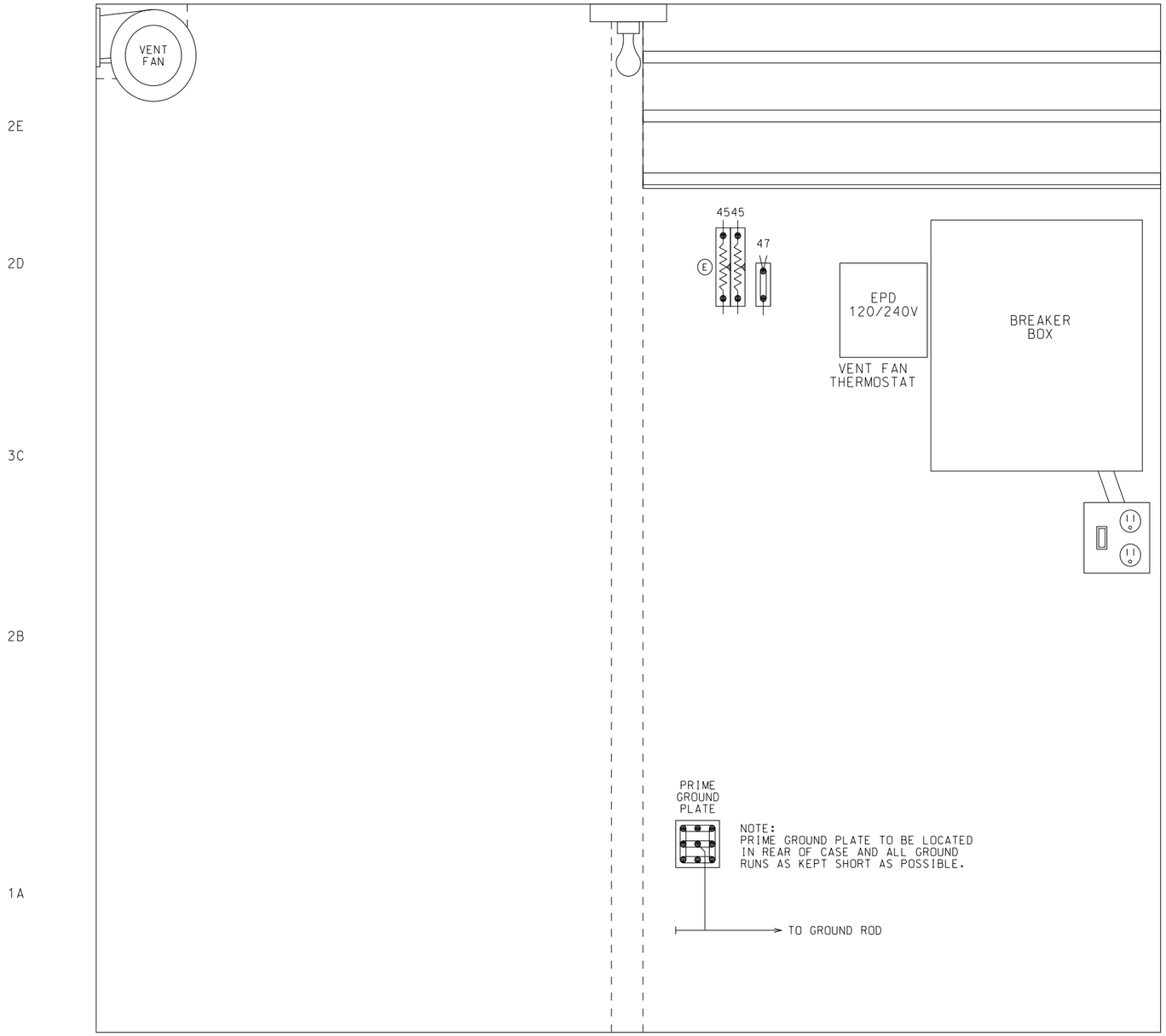

REAR OF CASE

CASE REAR LAYOUT

NO.	DATE	BY	DESCRIPTION	APP. BY

REVISIONS

THE OPERATION OF THE ORGANIZATION REPRESENTED HEREON CANNOT BE CHECKED FINALLY UNTIL ALL CIRCUITS AND DEVICES ARE CONNECTED TO FORM A COMPLETE SYSTEM OR AN EFFECTIVE PORTION THEREOF. SUCH SYSTEM OR PORTION MUST BE GIVEN COMPLETE CIRCUIT AND OPERATIONAL TEST BEFORE BEING PLACED IN REGULAR OPERATION.

PLOT DATE:$$PLOT_DATE | PLOT TIME:$TIME

SIEMENS
RAIL AUTOMATION
2400 NELSON MILLER PARKWAY
LOUISVILLE, KENTUCKY 40223

TITLE:
HIGHWAY GRADE CROSSING SIGNAL SYSTEM
PARK AVENUE - HERRIN, IL
DOT 294624C M.P. 11.90

CUSTOMER:
SNC SOLUTIONS
FOR CRAB ORCHARD AND EGYPTIAN RAILROAD

DES.: DAD	DATE: 05/15/14	PROJ. NO.: PMIA10323
CKD.: JTB	ISSUE DATE:	EST. NO.: XP-7313
DRN.: DAD	CAD ID.: PMIA10323.07	SHEET 7 OF 7