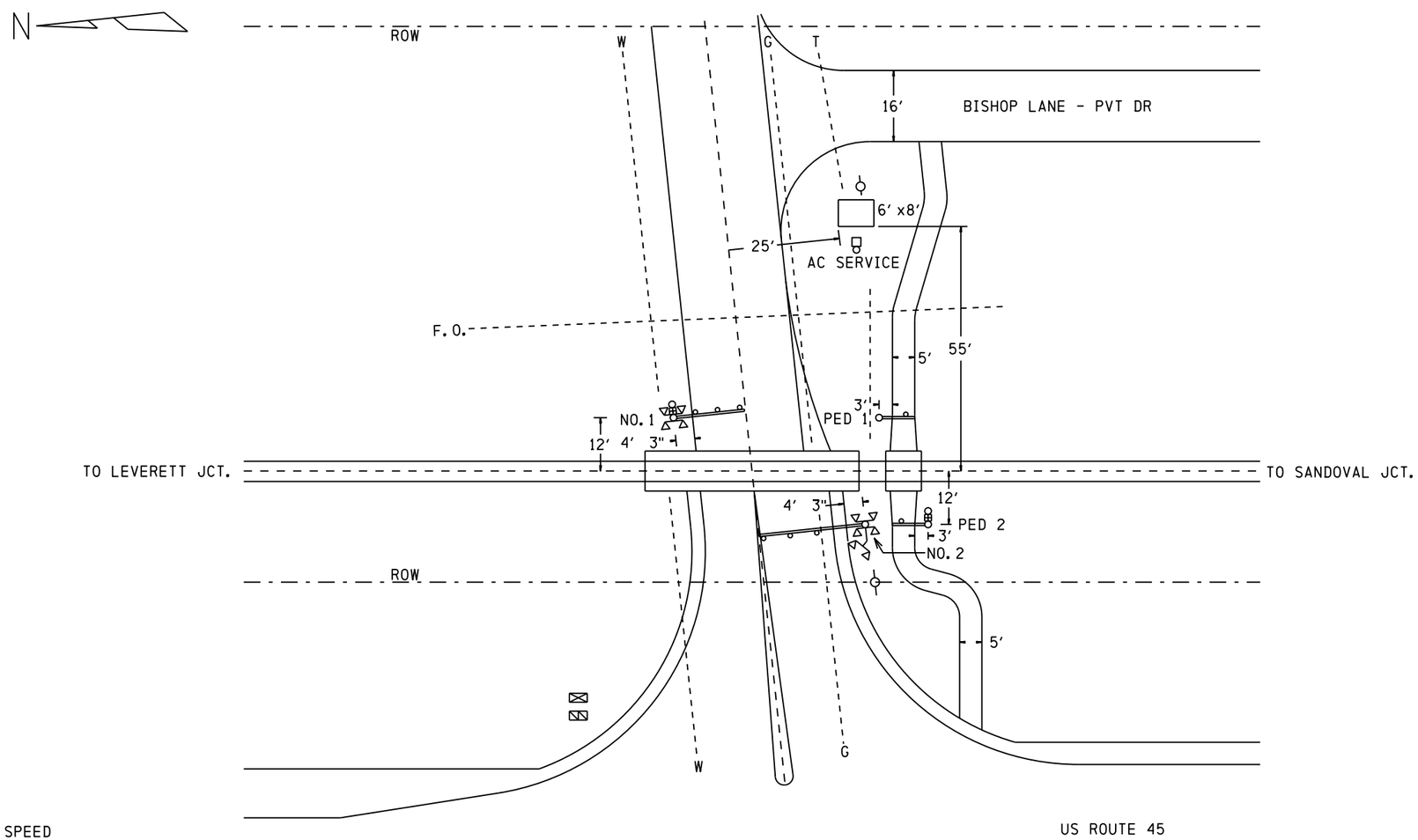

NOTES

1) 79 MPH DESIGN SPEED

2) 35 FEET MAXIMUM CLEARANCE DISTANCE

3) 120 FEET ISLAND DISTANCE

4) CONSTANT WARNING CONTROL

5) APPROACH CIRCUIT DISTANCE PROVIDES FOR:
   0 SEC CLEARANCE TIME
   25 SEC PREEMPTION TIME (0 SEC ADVANCE TIME)
   25 SEC MINIMUM WARNING TIME
   4 SEC GATE DESCENT DELAY
   10 SEC BUFFER TIME
   5 SEC EQUIPMENT REACTION TIME

6) 18 FEET NO. 1 GATE ARM LENGTH
   24 FEET NO. 2 GATE ARM LENGTH
   8 FEET PED. 1 GATE ARM LENGTH
   8 FEET PED. 2 GATE ARM LENGTH

PROPOSED D	PROPOSED M	PROPOSED Y	REVISIONS	D	C	COMPLETED D	COMPLETED M	COMPLETED Y	C
			PLAN REDRAWN			09	09	15	TPF

REGION SOUTHERN

SUB. CHAMPAIGN 341

SIGNALS AND COMMUNICATIONS HOMEWOOD

DES. AVS

3 JUNE 1997

CH.

SITUATION SKETCH
SCALE 1" = 20′
SAVOY, IL

CHURCH ST

CHA-132.18-0

DOT# 289 086M

12

cha-132.18-0.dgn
10-SEP-2015

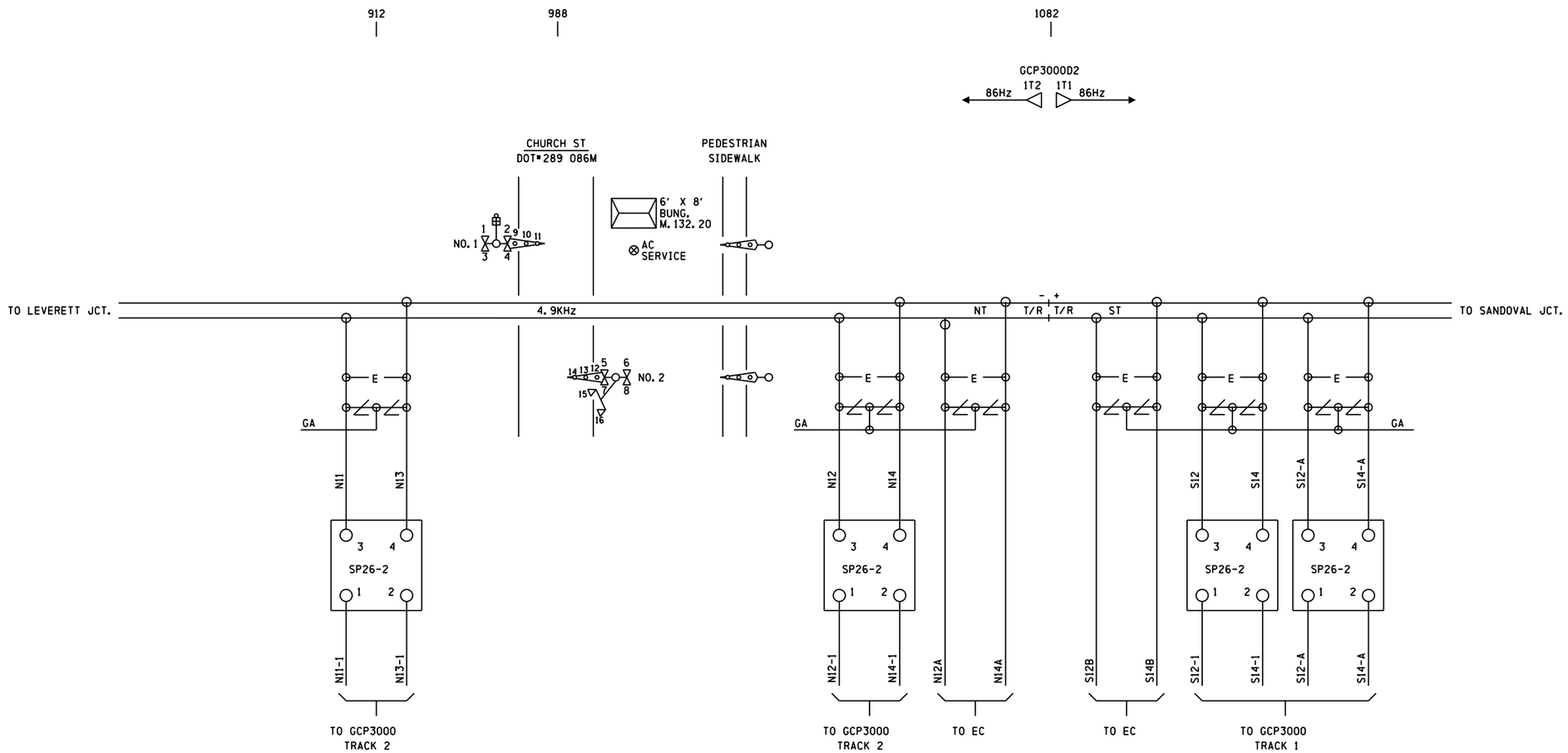

FLASHING LIGHT UNITS ALIGNMENT TABLE

PRIMARY FRONT LIGHTS FOR VEHICLES							
SIG #	LIGHT #	ROUNDEL		ROAD SPEED	MINIMUM DISTANCE	RECOMMENDED DISTANCE	ALIGNMENT DISTANCE
		SIZE	TYPE	MPH	FT	FT	FT
1	1,2	12"	LED	30	270	450	
2	7,8	12"	LED	30	270	450	
BACK LIGHTS FOR VEHICLES							
SIG #	LIGHT #	ROUNDEL		ROAD SPEED	MINIMUM DISTANCE	RECOMMENDED DISTANCE	ALIGNMENT DISTANCE
		SIZE	TYPE	MPH	FT	FT	FT
1	3,4	12"	LED	N/A	N/A	N/A	50
2	5,6	12"	LED	N/A	N/A	N/A	50
INTERMEDIATE FRONT LIGHTS FOR VEHICLES							
SIG #	LIGHT #	ROUNDEL		ROAD SPEED	MINIMUM DISTANCE	RECOMMENDED DISTANCE	ALIGNMENT DISTANCE
		SIZE	TYPE	MPH	FT	FT	FT
2	15,16	12"	LED	N/A	N/A	N/A	

NOTE
FIELD IS TO PROVIDE THE ACTUAL ALIGNMENT DISTANCE AS DETERMINED BY
SCP-706: ROAD CROSSING DEVICE LIGHT UNIT ALIGNMENT PROCEDURES

TO BE CONFIRMED

CONFIRMED

DATE _____

BY _____

(PRINT NAME)

PROPOSED D	M	Y	REVISIONS	D	C	COMPLETED D	M	Y	C
			REDRAWN			15	08	11	NST
15	08	11	ADD CRTU	NST	NST	16	11	12	JLW
			FIELD CHECK			09	09	15	TPF

REGION SOUTHERN

SUB. CHAMPAIGN 341

SIGNALS AND COMMUNICATIONS HOMEWOOD

DES. AVS

30 JANUARY 1997

CH.

TRACK LAYOUT & CABLE

SAVOY, IL

CHURCH ST

CHA-132.18-01

DOT# 289 086M

cha-132.18-01.dgn
10-SEP-2015

cha-132.18-02.dgn
10-SEP-2015

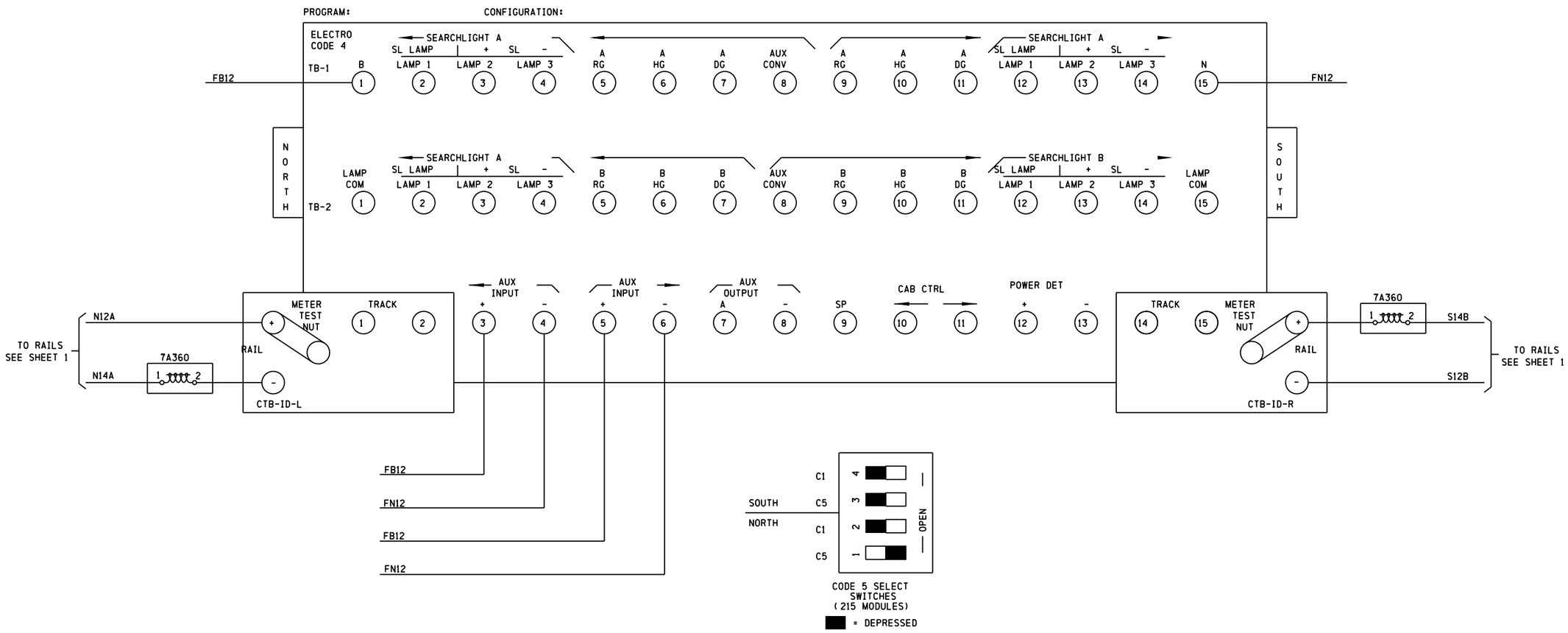

PROPOSED D	PROPOSED M	PROPOSED Y	REVISIONS	D	C	COMPLETED D	COMPLETED M	COMPLETED Y	C
			REDRAWN			15	08	11	NST
04	01	13	ADD SSCC IV	NST	NST	09	09	15	TPF

REGION SOUTHERN
SUB. CHAMPAIGN 341

SIGNALS AND COMMUNICATIONS HOMEWOOD
30 JANUARY 1997
DES. LES
CH.

ELECTRO CODE

SAVOY, IL
CHURCH ST

CHA-132.18-02

DOT# 289 086M

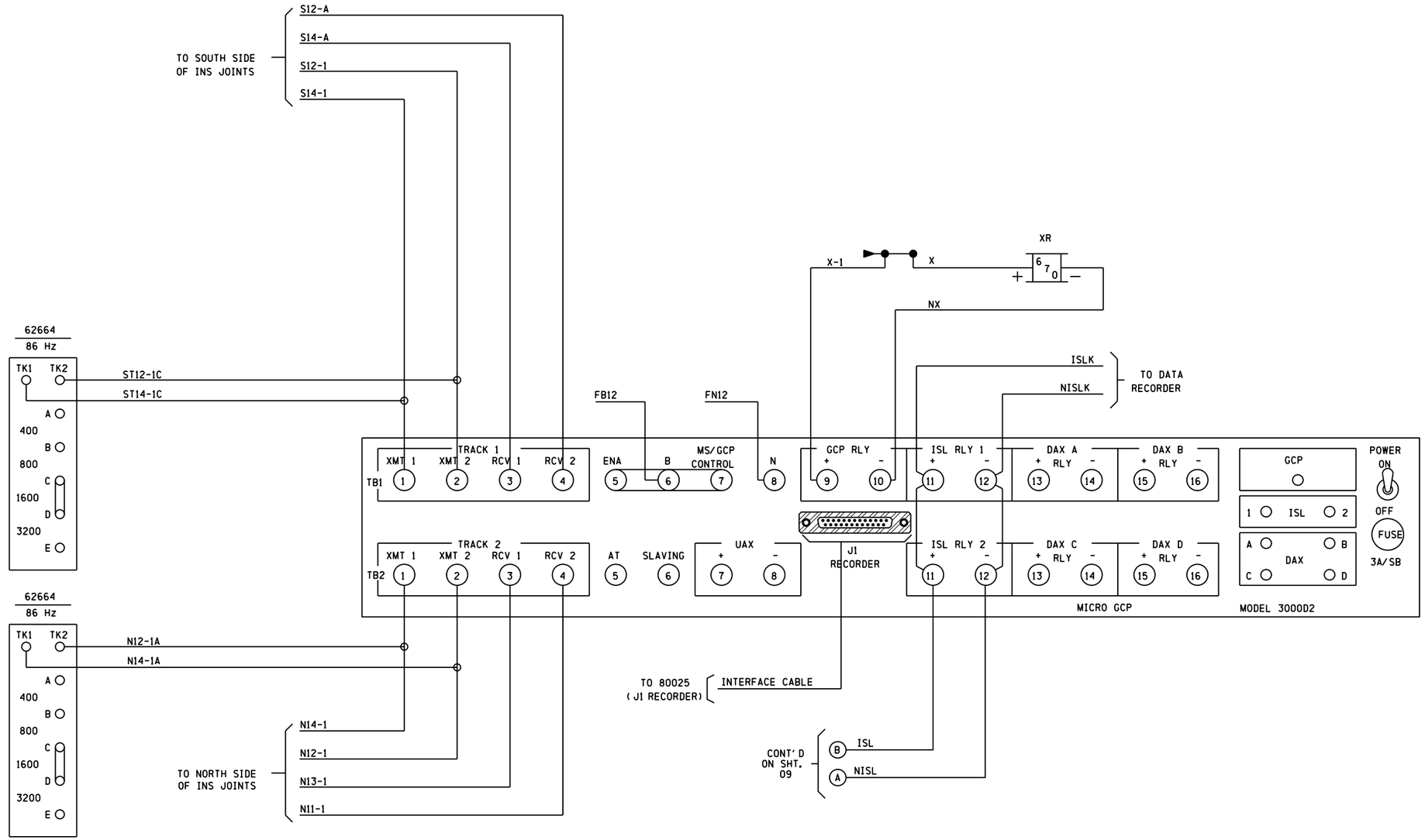

PROPOSED D	PROPOSED M	PROPOSED Y	REVISIONS	D	C	COMPLETED D	COMPLETED M	COMPLETED Y	C
			REDRAWN			15	08	11	NST
04	01	13	ADD SSCC IV	NST	NST	09	09	15	TPF

REGION SOUTHERN

SUB. CHAMPAIGN 341

SIGNALS AND COMMUNICATIONS HOMEWOOD

30 JANUARY 1997

DES. LES

CH.

GCP3000D2

SAVOY, IL

CHURCH ST

CHA-132.18-03

DOT# 289 086M

cha-132.18-03.dgn
10-SEP-2015

cha-132.18-04.dgn
10-SEP-2015

■ press PROGRAM key

NUMBER OF TRACKS (TRANSCEIVER MODULES)		1 ☐	2 ■
FREQUENCY (MS/GCP)	T1:	86 Hz	
	T2:	86 Hz	
UNIDIRECTIONAL/BIDIRECTIONAL	T1:	UNI ☐	BI ■
	T2:	UNI ☐	BI ■
XMIT LEVEL	T1:	MAX ■	MED ☐
	T2:	MAX ■	MED ☐
PREDICTOR/MOTION SENSOR	T1:	PRED ■	MS ☐
	T2:	PRED ■	MS ☐
WARNING TIME SELECTED	T1:	30 sec.	
	T2:	30 sec.	
APPROACH DISTANCE SELECTED (NOTES 2, 4 & 6)	T1:	4300 ft.	
	T2:	4300 ft.	
APPROACH DISTANCE COMPUTED (NOTES 1, 4, 6 & 9)	T1:	5000 ft.	
	T2:	4673 ft.	
UAX1 PICKUP DELAY (UAX1) (0 = OFF)		0 sec.	
ENA/UAX2 DELAY (0 = ENA)		0 sec.	
ISLAND DISTANCE (between Island track wire connections)(NOTES 2, 4 & 6)	T1:	ft.	
	T2:	180 ft.	
NUMBER OF DAX'S		0 ■ 1 ☐ 2 ☐ 3 ☐ 4 ☐	
DAX A TRACK ASSIGNMENT		T1 ☐	T2 ☐
DAX A DISTANCE (0=PREEMPT) (NOTES 2, 4 & 6)		ft.	
DAX A WARNING TIME		sec.	

■ press PROGRAM key

DAX B TRACK ASSIGNMENT	T1 ☐	T2 ☐
DAX B DISTANCE (0=PREEMPT) (NOTES 2, 4 & 6)	ft.	
DAX B WARNING TIME	sec.	
DAX C TRACK ASSIGNMENT	T1 ☐	T2 ☐
DAX C DISTANCE (0=PREEMPT) (NOTES 2, 4 & 6)	ft.	
DAX C WARNING TIME	sec.	
DAX D TRACK ASSIGNMENT	T1 ☐	T2 ☐
DAX D DISTANCE (0=PREEMPT) (NOTES 2, 4 & 6)	ft.	
DAX D WARNING TIME	sec.	
SLAVING MASTER/SLAVE	MASTER ■	SLAVE ☐
PASSWORD ENABLED	DISABLED ☐	
	ENABLED ■	
RECORDER INSTALLED (NOTE 11)	NOT INSTALLED ☐	
	INSTALLED ■	
EXTERNAL NODE (NOTE 11)		
RS-232-C BAUD RATE	9600 bps	
RS-232-C DATA BITS	7 ☐	8 ■
RS-232-C STOP BITS	1 ■	2 ☐
RS-232-C PARITY	NONE ■	MARK ☐
	ODD ☐	SPACE ☐
	EVEN ☐	
DATE (e.g., MON 27 FEB 1995) (NOTE 2)		
TIME (e.g., 11:25:43 AM) (NOTE 2)		
DAYLIGHT SAVINGS	ON ■	OFF ☐

■ press FUNCTION key

SWITCH TO MS (ENTER EZ VALUE) (NOTES 2, 4 & 5)	T1: 10 EZ	
	T2: 10 EZ	
TRANSFER DELAY MS TO GCP (0=OFF)	T1: 0 sec.	
	T2: 0 sec.	
TRANSFER MS TO GCP PRIME (WHEN PRIME PREDICTION OFFSET IS ON)	T1: ON ☐	OFF ☐
	T2: ON ☐	OFF ☐
TRANSFER MS TO GCP DAX A	T1: ON ☐	OFF ☐
	T2: ON ☐	OFF ☐
TRANSFER MS TO GCP DAX B	T1: ON ☐	OFF ☐
	T2: ON ☐	OFF ☐
TRANSFER MS TO GCP DAX C	T1: ON ☐	OFF ☐
	T2: ON ☐	OFF ☐
TRANSFER MS TO GCP DAX D	T1: ON ☐	OFF ☐
	T2: ON ☐	OFF ☐
PRIME PREDICTION OFFSET (0=OFF) (NOTES 2, 4 & 6)	T1: 0 ft.	
	T2: 0 ft.	

PICKUP DELAY PRIME	AUTOMATIC ☐	FIXED ☐	30 sec.
PICKUP DELAY DAX A	AUTOMATIC ☐	FIXED ☐	N/A sec.
PICKUP DELAY DAX B	AUTOMATIC ☐	FIXED ☐	N/A sec.
PICKUP DELAY DAX C	AUTOMATIC ☐	FIXED ☐	N/A sec.
PICKUP DELAY DAX D	AUTOMATIC ☐	FIXED ☐	N/A sec.

COMPENSATION VALUE (NOTES 3 & 4)	T1: 1300	
COMPENSATION VALUE (NOTES 3 & 4)	T2: 1300	

■ press FUNCTION key

ENHANCED DETECTION (ED) (NOTES 6 & 9)	T1: ON ■	OFF ☐
	T2: ON ■	OFF ☐
BACK TO BACK T1 & T2 (When ED is on)	NO ☐	YES ■
STATION STOP TIMER (When ED is on)	T1: 10 sec.	
	T2: 10 sec.	
NUMBER OF TRACK WIRES	T1: 4 ■	6 ☐
	T2: 4 ■	6 ☐
LOW EX ADJUSTMENT (NOTES 2, 4, 6 & 7)	T1: 0	
	T2: 0	
LOW EZ DETECTION (WHEN EZ=70)	T1: ON ☐	OFF ■
	T2: ON ☐	OFF ■
LOW EZ DETECTION TIMER (WHEN LOW EZ DETECTION IS ON) (NOTE 12)	T1: 0 min.	
	T2: 0 min.	
POSITIVE START (0=OFF) (NOTES 2, 4, 6 & 10)	T1: 0 EZ	
	T2: 0 EZ	
POSITIVE START TIMEOUT (0=NONE) (WHEN POSITIVE START IS ON)	T1: 0 min.	
	T2: 0 min.	
SET "AT" OPERATION	NORMAL ■	DIAGNOSTIC ☐
DIAGNOSTIC MESSAGES	ON ■	OFF ☐
DAX MESSAGES	ON ☐	OFF ■
ADVANCE PREEMPT (0=OFF)	0 sec.	
MOTION SENSING LEVEL (0=NORMAL) (NOTES 2, 4, & 6)	T1: 0 %	
	T2: 0 %	

1) COMPUTED BY SYSTEM DURING CALIBRATION

2) PROGRAMMED AT INSTALLATION DURING CALIBRATION PROCEDURE

3) THE COMPENSATION VALUE IS PROVIDED GY THE 3000 GCP SYSTEM AND NO ADDITIONAL PROGRAMMING IS NORMALLY REQUIRED. DO NOT CHANGE VALUE WITHOUT PROPER INSTRUCTION.

4) INDICATE READING OR SELECTION IN SPACE PROVIDED.

5) EACH CONSTANT WARNING DEVICE SYSTEM TO BE PROGRAMMED TO CONVERT TO A MOTION SENSOR 300 FEET FROM EDGE OF ROAD. SHUNT TRACK 300 FEET FROM EDGE OF ROAD AND NOTE "EZ" VALUE. PROGRAM EACH SYSTEM WITH THE INDICATED "EZ" VALUE +2.

6) REFER TO MODEL 3000 GCP INSTRUCTION AND INSTALLATION MANUAL FOR PROGRAMMING PARAMETERS.

7) "LOW EX" THRESHOLD IS FACTORY PRESET AND NO ADDITIONAL PROGRAMMING IS NORMALLY REQUIRED. IMPROPER REDUCTION OF THE "LOW EX" THRESHOLD MAY CAUSE REDUCTION IN WARNING TIME. DO NOT CHANGE VALUE WITHOUT PROPER INSTRUCTION.

8) T1-ISLAND TO BE PROGRAMMED AT N/A KHz
T2-ISLAND TO BE PROGRAMMED AT 4.9 KHz

9) SET UP APPROACH LENGTH AND LINEARIZATION CALIBRATION
VERIFY THAT "ENHANCED DETECTION" MODE IS PROGRAMMED "OFF" BEFORE ATTEMPTING LINEARIZATION PROCEDURES.

10) AT EACH SIGNAL LOCATION, THE CONSTANT WARNING DEVICE SYSTEM IS TO BE PROGRAMMED USING POSITIVE START FUNCTION. SHUNT TRACK AT _____ FEET FROM EDGE OF ROAD AND NOTE "EZ" VALUE. PROGRAM THE SYSTEM WITH THE INDICATED "EZ" VALUE.

11) GCP/MS NODES MUST BE INSTALLED ON THE SEA/R BEFORE RECORDER MODULE 80255 CAN BE INSTALLED.

12) SET VALUE TO MATCH ACTUAL TRAIN MOVEMENT WITHIN THE CROSSING APPROACH CIRCUITS.

ENHANCED DETECTION SETTINGS
(ADJUST AS REQUIRED FOR FIELD CONDITIONS)

	DEFAULT	RECOMMENDED	T1	T2	
ED SENSITIVITY LEVEL	1003	1004	1004	1004	TO VERY ED SENSITIVITY WITH ED ON, KEY-IN "NEW DATA", THEN 1003, 1004, 1005 OR 10025. THE LOWER THE NUMBER, THE HIGHER THE SENSITIVITY.
SPEED LIMITING	4000 (ON)	4000 (ON)			SPEED LIMITING IS INDEPENDENT OF ED AND A " " IS SHOWN WHEN IT IS ON. TO TURN ON OR OFF, KEY-IN "NEW DATA", THEN 4000 FOR ON OR 4001 FOR OFF.
PREDICTION COUNTS	3000 (ON)	3000 (ON)			TO INCREASE PREDICTION COUNTS WITH ED ON, KEY-IN "NEW DATA", THEN 3001, 3002 OR 3003. 3001 = A DELAY OF 0.5 SEC (DISPLAYED AS ON+1) 3002 = A DELAY OF 1.0 SEC (DISPLAYED AS ON+2) 3003 = A DELAY OF 1.5 SEC (DISPLAYED AS ON+3)

CALIBRATION HISTORY

80012 DC VOLTAGE READINGS AFTER CALIBRATION		CALIBRATION HISTORY EZ/EX VALUES (TRACK UNOCCUPIED)		LINEARIZATION HISTORY HARDWIRE SHUNT AT TERMINATION SHUNT			HARDWIRE SHUNT AT 50 PERCENT POINT OF TRACK NO LINEARIZATION		LINEARIZATION COMPLETE	
T1 Z1= Z2=	T2 Z1= Z2=	EZ	EX	EZ	EX	50% EZ VALUE	EZ	EX	STEP ±	EZ
NORTH	TRACK 1								43	
SOUTH	TRACK 1	99	86	88	91	40	40		0	43
NORTH	TRACK 2	100	84	90	90	41	45		+2	43
SOUTH	TRACK 2									

TRACK 1 TCN	
TRACK 2 TCN	
CONFIGURATION CCN	

9V121-A01M
CRC 898ECAF3BB05

PROPOSED D	M	Y	REVISIONS	D	C	COMPLETED D	M	Y	C
			REDRAWN			15	08	11	NST
			FIELD CHECK			09	09	15	TPF

REGION SOUTHERN
SUB. CHAMPAIGN 341
CN

SIGNALS AND COMMUNICATIONS HOMEWOOD
DES. LES
30 JANUARY 1997
CH.

GCP APPLICATION INFO

SAVOY, IL
CHURCH ST

CHA-132.18-04

DOT# 289 086M

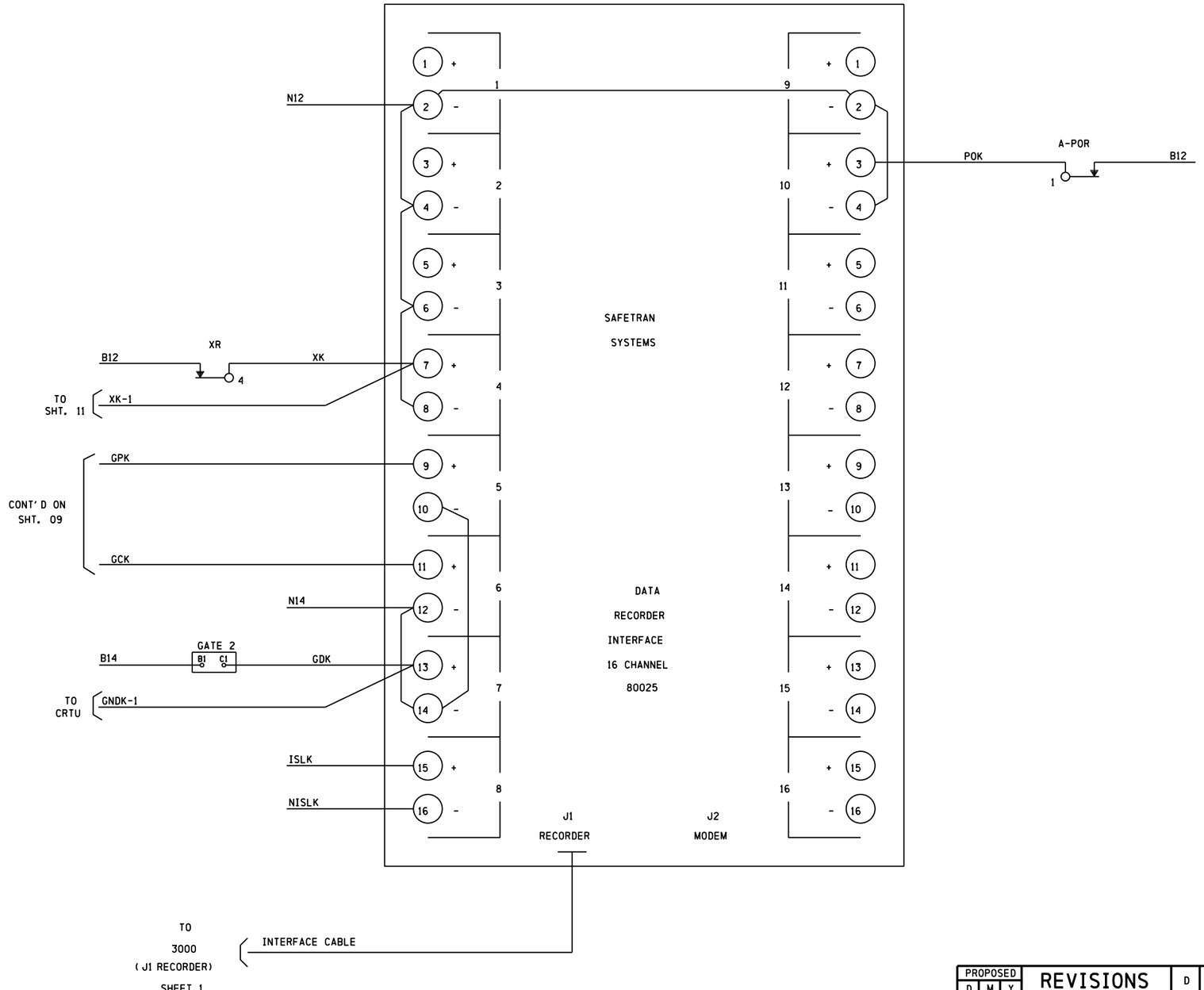

PROPOSED D	M	Y	REVISIONS	D	C	COMPLETED D	M	Y	C
			REDRAWN			15	08	11	NST
15	08	11	ADD CRTU	NST	NST	16	11	12	JLW
04	01	13	ADD SSCC IV	NST	NST	09	09	15	TPF

REGION SOUTHERN

SUB. CHAMPAIGN 341

SIGNALS AND COMMUNICATIONS
HOMEWOOD

DES. LES

30 JANUARY 1997

CH.

DATA RECORDER

SAVOY, IL
CHURCH ST

CHA-132.18-05

DOT# 289 086M

cha-132.18-05.dgn
10-SEP-2015

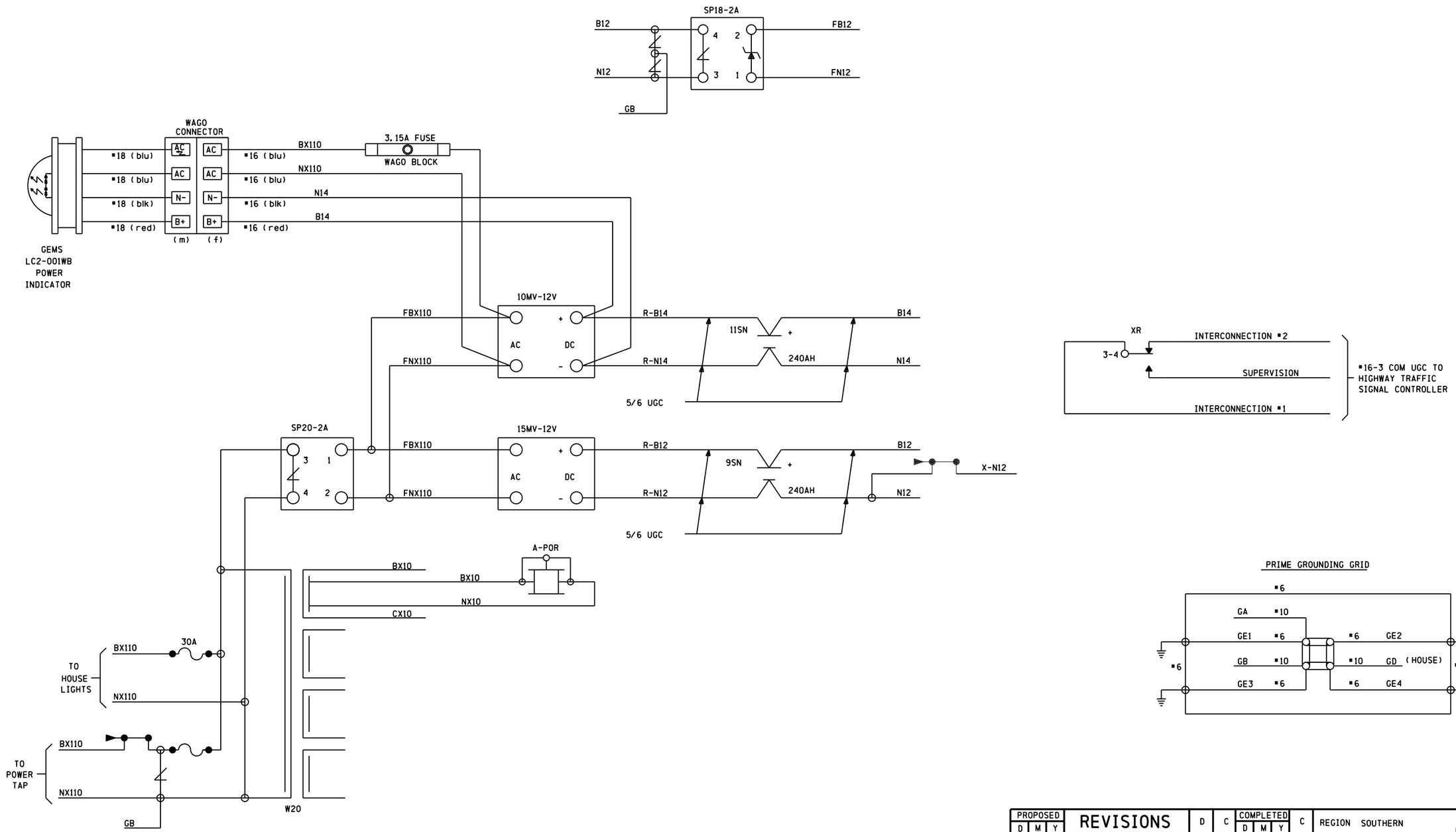

PROPOSED D	M	Y	REVISIONS	D	C	COMPLETED D	M	Y	C
			REDRAWN			15	08	11	NST
			AS INSTALLED			16	11	12	JLW
04	01	13	ADD SSCC IV	NST	NST	09	09	15	TPF

REGION SOUTHERN

SUB. CHAMPAIGN 341

SIGNALS AND COMMUNICATIONS HOMEWOOD

DES. LES

30 JANUARY 1997

CH.

POWER & XR

SAVOY, IL

CHURCH ST

CHA-132.18-06

DOT# 289 086M

cha-132.18-06.dgn
10-SEP-2015

cha-132.18-07.dgn
10-SEP-2015

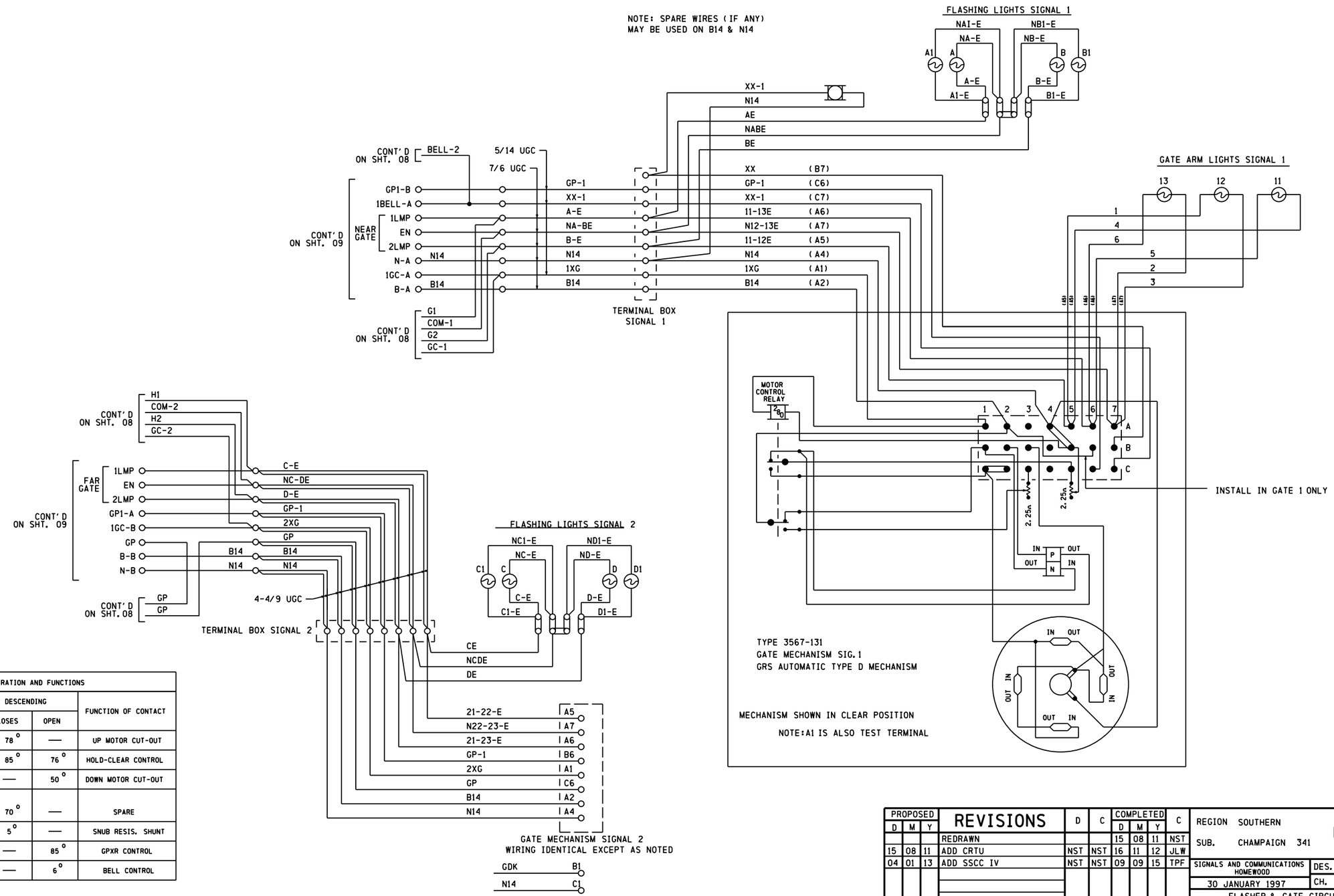

CIRCUIT CONTROLLER OPERATION AND FUNCTIONS					
CONTACT SPACE NO.	CLEARING		DESCENDING		FUNCTION OF CONTACT
	CLOSES	OPEN	CLOSES	OPEN	
1	—	88°	78°	—	UP MOTOR CUT-OUT
2	76°	85°	85°	76°	HOLD-CLEAR CONTROL
3	50°	—	—	50°	DOWN MOTOR CUT-OUT
4	—	70°	70°	—	SPARE
5		5°	5°	—	SNUB RESIS. SHUNT
6	85°	—	—	85°	GPXR CONTROL
7	6°	—	—	6°	BELL CONTROL

PROPOSED D	M	Y	REVISIONS	D	C	COMPLETED D	M	Y	C
			REDRAWN			15	08	11	NST
15	08	11	ADD CRTU	NST	NST	16	11	12	JLW
04	01	13	ADD SSCC IV	NST	NST	09	09	15	TPF

REGION SOUTHERN
SUB. CHAMPAIGN 341
CN
SIGNALS AND COMMUNICATIONS HOMEWOOD
DES. LES
30 JANUARY 1997
CH.
FLASHER & GATE CIRCUIT
SAVOY, IL
CHURCH ST
CHA-132.18-07
DOT# 289 086M

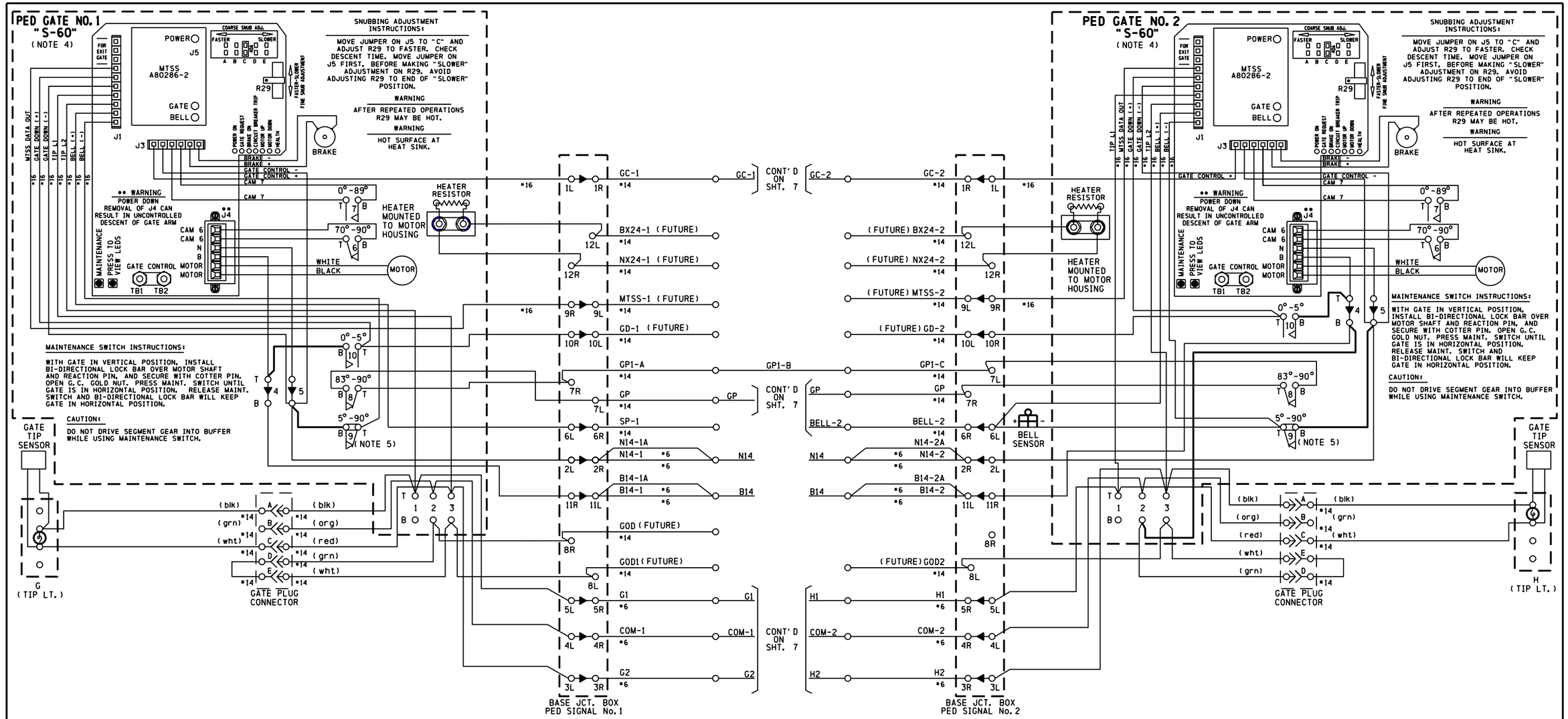

NOTES:

1) ON GATE No. 1 ADD JUMPER BETWEEN TERMINALS:
   ADD JUMPER BETWEEN TERMINAL 10B & 8B
   AND ADD JUMPER BETWEEN TERMINAL 5B & 9B.
2) ON GATE No. 2 ADD JUMPER BETWEEN TERMINALS:
   ADD JUMPER BETWEEN TERMINAL 4T &10B,
   ADD JUMPER BETWEEN TERMINAL 5B & 9B,
   AND ADD JUMPER BETWEEN TERMINAL 4B & 2B.
3) ALL WIRING #10 AWG MINIMUM UNLESS OTHERWISE NOTED. WIRE SIZES SHOWN ARE MINIMUM GAUGE.
4) GATE DESCENT TIME (RELEASE FROM VERTICAL TO FULLY HORIZONTAL) TO BE WITHIN 11 SECONDS.
5) BELL CUT-OUT (5°-90°) WHEN REQUIRED REMOVE STRAP BETWEEN 9B AND 9T.
6) ENSURE ALL TERMINALS HAVE TWO SHOULDER NUTS.

PROPOSED D	PROPOSED M	PROPOSED Y	REVISIONS	D	C	COMPLETED D	COMPLETED M	COMPLETED Y	C
04	01	13	ADD SSCC IV	NST	NST	09	09	15	TPF

REGION SOUTHERN
SUB. CHAMPAIGN 341

SIGNALS AND COMMUNICATIONS HOMEWOOD
06 JULY 2010
DES. APL
CH. MKN

GATE MECHANISM CONTROL CIRCUITS
SAFETRAN MODEL S-60
SAVOY, IL
CHURCH ST

CHA-132.18-08

DOT# 289 086M

SAFETRAN SYSTEM CORP.
LOUISVILLE DIVISION, LOUISVILLE, KY

cha-132.18-08.dgn
10-SEP-2015

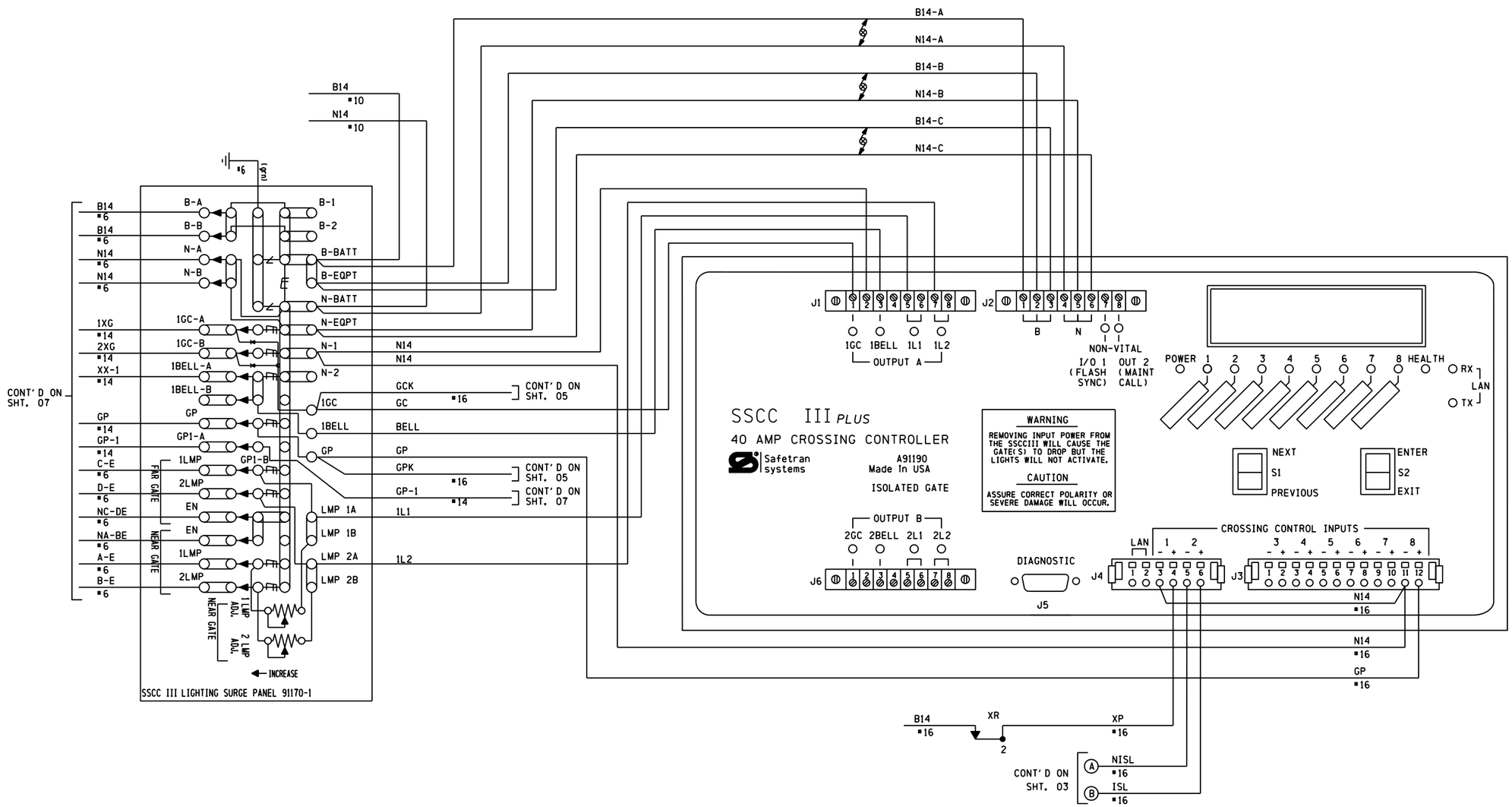

NOTES:

1) DENOTES RECTIFIER : (SAFETRAN #8008A299006)

2) DENOTES TWISTED PAIRS.

3) ALL WIRINGS TO BE #10 AWG MINIMUM UNLESS OTHERWISE NOTED.

PROPOSED D	PROPOSED M	PROPOSED Y	REVISIONS	D	C	COMPLETED D	COMPLETED M	COMPLETED Y	C
			AS-INSTALLED			09	09	15	TPF

REGION SOUTHERN

SUB. CHAMPAIGN 341

SIGNALS AND COMMUNICATIONS HOMEWOOD

DES. NST

04 JANUARY 2013

CH. NST

SSCCIII+ 40 AMP CROSSING CONTROLLER SAVOY, IL

CHURCH ST

CHA-132.18-09

DOT# 289 086M

cha-132.18-09.dgn 10-SEP-2015

CROSSING CONTROLLER SSCCIII 40-AMPERE UNIT, A91190

PROGRAM	NOTES	INITIAL SETTING BY: _____ DATE: __/__/____
FLASH RATE:	30-70 FLASHES/MINUTE DEFAULT = 50	55 FLASHES/MINUTE
GATES USED:	YES/NO DEFAULT = YES	■ YES ☐ NO
1 GC DELAY:	3-20 SEC., DEFAULT = 4	4 SECONDS
2 GC DELAY (40 AMP UNIT):	3-20 SEC., DEFAULT = 4	_____ SECONDS
GATE RISING BELL:	ON/OFF, DEFAULT = ON	☐ ON ■ OFF
ENABLED INPUTS:	1 THRU 7 ONLY	■ 1 ■ 2 ☐ 3 ☐ 4 ☐ 5 ☐ 6 ☐ 7
GC2/I7:	GC2 NORMAL, I7 = NORMAL GC2 INVERTED, I7 = NORMAL GC2 PRMT RELAY, I7 = FDBK	■ NORMAL ☐ INVERTED ☐ PRE-EMPT SIM ☐ PRE-EMPT ADV
ADV PRE-EMPT TIME (40A):	1-30 SEC., DEFAULT = 1	N/A SECONDS
MIN ACTIVATION TIME:	0-30 SEC., DEFAULT = 20	20 SECONDS
STICK RELEASE TIME:	5-30 MIN., DEFAULT = 15	N/A MINUTES
SUP ISLAND TIME:	5-20 MIN., DEFAULT = 20	N/A MINUTES
ENABLED OUTPUTS: (40 amp only)	DEFAULT = A + B	☐ A + B ■ A ☐ B
DAYLIGHT SAVINGS:	DEFAULT = DISABLED	■ ENABLED ☐ DISABLED
DATE:	N/A	☐ DATE SET
TIME:	24-FORMAT	☐ TIME SET
PASSWORD:	DEFAULT = DISABLED	☐ ENABLED ■ DISABLED
CONFIGURE		
LOS TIMERS:	0-20 SECONDS, INPUTS 1-7 ONLY DEFAULT = 0	1: 0 SEC 5: 0 SEC 2: 0 SEC 6: 0 SEC 3: 0 SEC 7: 0 SEC 4: 0 SEC
MCF:		MCF: basic.mcf.f CRC: D240612
ATCS ADDRESS:	DEFAULT = 700000000000	
LOW BATTERY:	9.0-15.0 VOLTS, OR DISABLED DEFAULT = DISABLED	■ DISABLED ☐ ENABLED _____ VOLTS
AUX I/O:	DEFAULT = NONVITAL OUTPUT	■ NV OUTPUT ☐ FLASH SYNC IN ☐ FLASH SYNC OUT
TEST CONFIGURE		
LAMP TEST CANCEL TIMER:	1-15 MINUTES, DEFAULT = 5	5 MINUTES
LAMP TEST DELAY TIMER:	30-120 SEC., DEFAULT = 30	30 SEC.
LAMP TEST ON TIMER:	15-60 SEC., DEFAULT = 15	15 SEC.

STANDARD SETUP LAMP VOLTAGES PROCEDURE
USING TRUE RMS AC+DC METER, OR CONVERSION TABLE BELOW

SETUP LAMP VOLTAGES	INITIAL SETTINGS BY: CSH DATE: 06/05/2012 METER: FLUKE 187 TRUE RMS
FAR GATE	1 L1 = _____ VOLTS 1 L2 = _____ VOLTS 2 L1 = _____ VOLTS 2 L2 = _____ VOLTS
SSCCIII+	1 L1 = _____ VOLTS 1 L2 = _____ VOLTS 2 L1 = _____ VOLTS 2 L2 = _____ VOLTS
NEAR GATE	1 L1 = _____ VOLTS 1 L2 = _____ VOLTS 2 L1 = _____ VOLTS 2 L2 = _____ VOLTS

MULTIMETER READING VARIANCE FROM ACTUAL LAMP VOLTAGE

BATTERY BANK VOLTAGE	VALID LAMP OUTPUT RANGE (in volts)	DIGITAL METER (FLUKE 87 OR EQUIVALENT)	ANALOG METER (SIMPSON 260 OR TS111)
13.3	9.0 TO 12.0	1.3 VOLTS BELOW ACTUAL VALUE	0.6 VOLTS BELOW ACTUAL VALUE
14.7	9.0 TO 12.0	2.2 VOLTS BELOW ACTUAL VALUE	1.1 VOLTS BELOW ACTUAL VALUE
15.8	9.0 TO 12.0	2.6 VOLTS BELOW ACTUAL VALUE	2.0 VOLTS BELOW ACTUAL VALUE

FOR LAMP OUTPUT SETTINGS GREATER THAN 12.0 VOLTS, REDUCE THE LISTED VALUES BY 30%
LAMP VOLTAGE MEASUREMENTS SHOULD BE ACCURATE TO 0.3 VOLTS.

SOFTWARE VERSION: 9V546-A01.R

PROPOSED D	M	Y	REVISIONS	D	C	COMPLETED D	M	Y	C
			AS-INSTALLED			09	09	15	TPF

REGION SOUTHERN
SUB. CHAMPAIGN 341
CN

SIGNALS AND COMMUNICATIONS HOMEWOOD
DES. NST
04 JANUARY 2013
CH. NST

SSCCIII+ PROGRAM DATA

SAVOY, IL
CHURCH ST

CHA-132.18-10

DOT# 289 086M

cha-132.18-10.dgn
10-SEP-2015

cha-132.18-11.dgn
10-SEP-2015

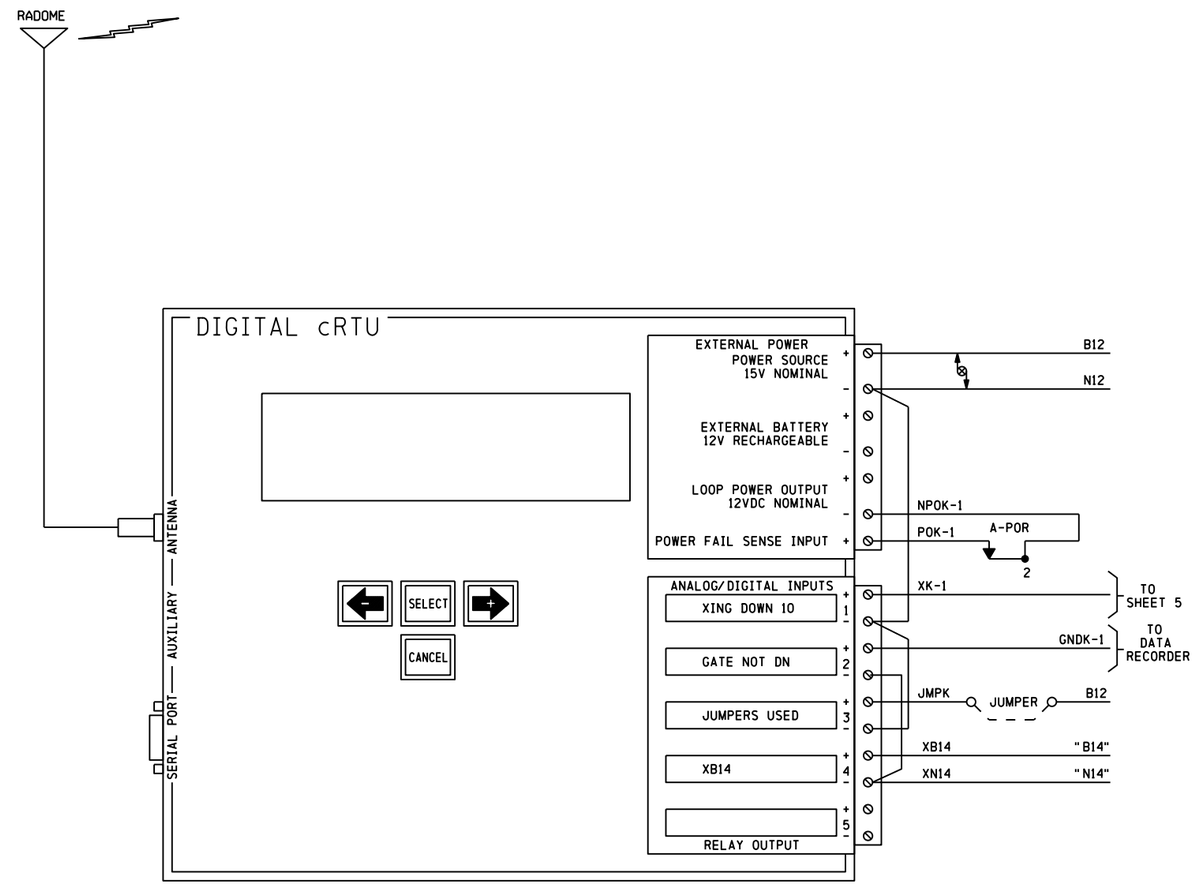

CONFIGKEY:	31
MODEL:	C06C/2ANA V2.3
SERIAL #:	03-20856-0511
SITE IDENTIFIER:	289 086M

	LOW ALARM	RETURN	HIGH ALARM	RETURN
B12	11.6	12.6	15.6	14.6
B14	13.8	14.8	17.8	16.8

NOTES

1) ALL WIRING TO BE #16 AWG MINIMUM UNLESS OTHERWISE NOTED

DENOTES TWISTED PAIR

PROPOSED D	PROPOSED M	PROPOSED Y	REVISIONS	D	C	COMPLETED D	COMPLETED M	COMPLETED Y	C
			AS INSTALLED			16	11	12	JLW
04	01	13	ADD SSCC IV	NST	NST	09	09	15	TPF

REGION SOUTHERN
SUB. CHAMPAIGN 341

SIGNALS AND COMMUNICATIONS HOMEWOOD
15 AUGUST 2011

DES. NST
CH. NST

DIGITAL CRTU WIRING

SAVOY, IL
CHURCH ST.

CHA-132.18-11

DOT# 289 086M

12