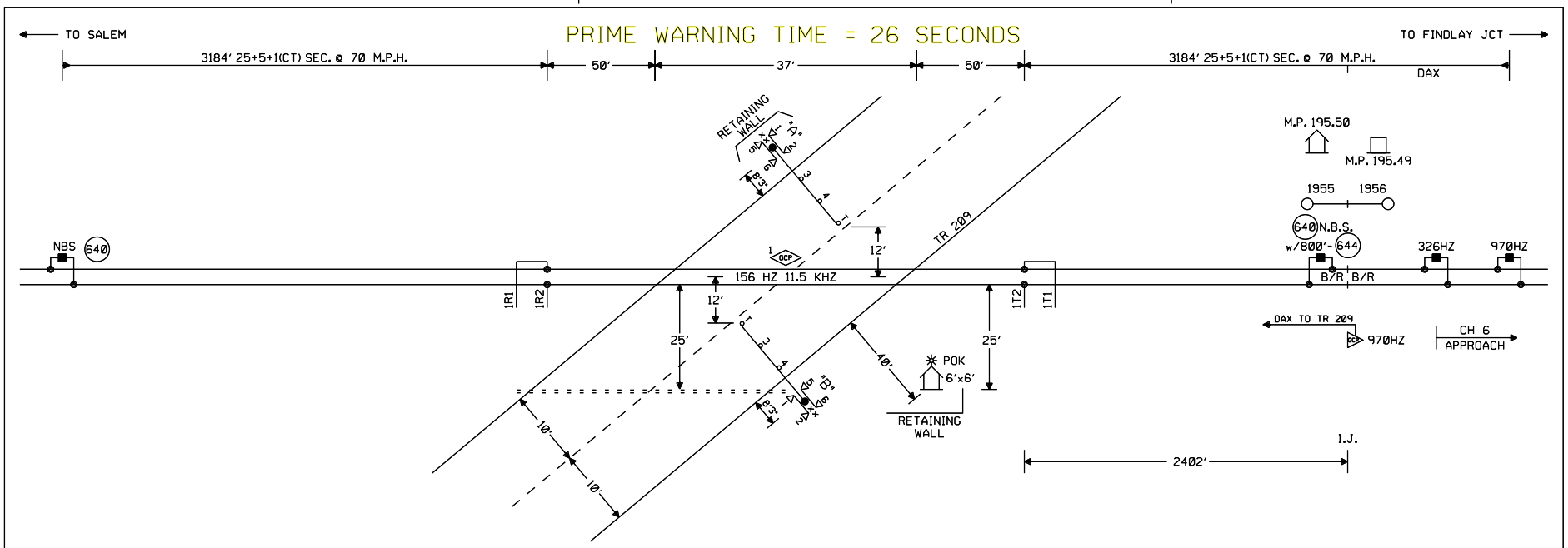

CONNECTS TO M.P. 197.37

~~CONNECTS TO M.P. 197.55~~

CONNECTS TO M.P. 195.50

NOTES:

⊗ = TWISTED WIRES
INSULATED 1 TWIST PER FT.
ALL TRACK WIRES 2C. #6

TRANSMITTER AND RECEIVER LEADS
TO BE SEPARATED BY AT LEAST 12" IN TRENCH,
LENGTHS SHOULD NOT EXCEED MANUFACTURES
RECOMMENDATION.

TOP OF FOUNDATION TO BE AT SAME ELEVATION
AS THE SURFACE OF THE TRAVELED WAY & NO
MORE THAN 4" ABOVE THE SURFACE OF THE GROUND.

ALL BUNGALOW WIRING TO BE #16 AWG FLEX
UNLESS OTHERWISE SPECIFIED EXCEPT ALL GROUND
WIRE TO BE #6 AWG FLEX OR LARGER.

ALL WIRING IN GATE MECHANISM TO BE #10 "AWG FLEX".

REFER TO UP STANDARD DWG FOR BUNGALOW GROUNDING.

PORTABLE GENERATOR EXTENSION CORD
FOR 240V TO 240V IS PROVIDED AS WELL
AS A 120V TO 240V ADAPTER.

ALL LIGHTS TO BE 12" ROUNDELS.

= = = = = = 4" X 50' CONDUIT

LIGHTS: LED LIGHTS

GATE A: 18'
GATE B: 18'

xx = BELL

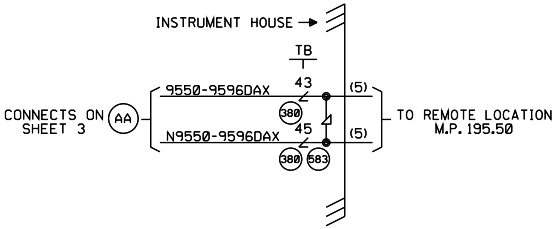

NOTE: WO# 27769 ONLY AFFECTS THIS SHEET OF THIS PLAN SET

W(S) ⟵○⟶ E(N)

—— = IN

—x— = OUT

CABLE TABULATION

CABLE #5 7C #14 U.G.B.T. HOUSE TO M.P. 195.50

Designed: 02/09/15 INSTALL FLASHERS W/GATES & CWT M.P. 197.37 2100 E Rec#: WO#: 27769 IS: /AJA / /XRL/JTB	Revised: 01-15-13 INSTALLED GATES AND A GCP 4000 IN A NEW BUNGALOW @ TR 209 M.P.195.96 Rec#: 18862 WO#: 10554 IS: 11-19-12 /BDF MJD/WIT/WIT/JTB	MODIFICATION LEVEL Q. A. LAST LEVEL CHECKED LAST LEVEL MOD THIS TYPICAL LAST LEVEL BY DESIGNER CHANGED FROM TYPICAL? REV 01.24.11 4K 1TKBG.1	DU DU DU Y	CIRCUIT MODIFICATIONS ARE NOT TO BE MADE WITHOUT AUTHORITY FROM THE OFFICE OF SIGNAL DESIGN	Date: 07/01/11 Des: WIT Chk: TJD AFE: 10554	UNION PACIFIC RAILROAD SHELBYVILLE, ILLINOIS TR 209 SALEM SUBDIVISION Office of Sr AVP Engineering - Signal/TCO Omaha, Nebraska	Sh.: 1 DOT 167874S MP: 195.96 ID: 030119596.1X	

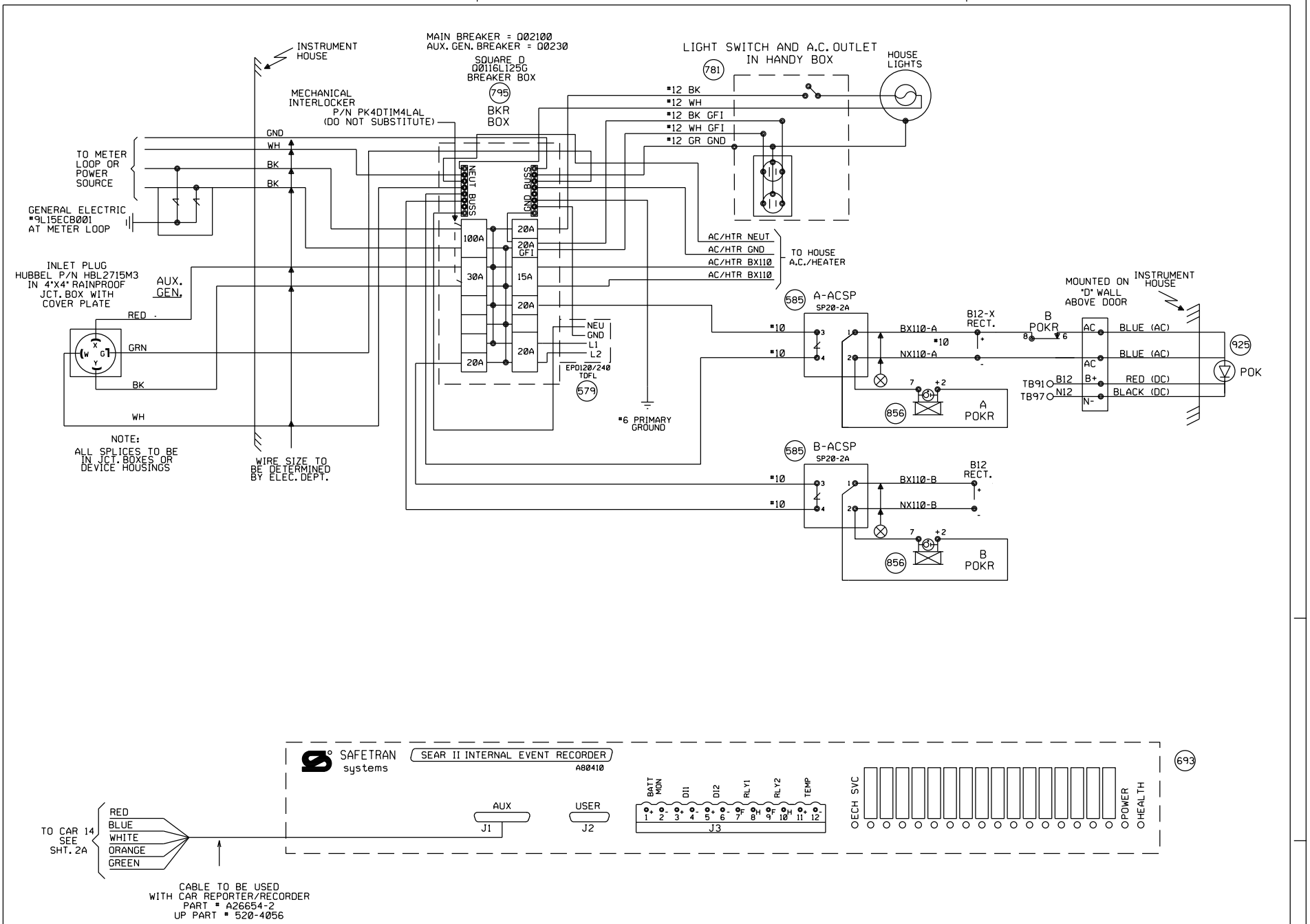

					Revised: 01-15-13 INSTALLED GATES AND A GCP 4000 IN A NEW BUNGALOW @ TR 209 M.P.195.96 Rec#: 18862 WO#: 10554 IS: 11-19-12 /BDF MJD/WIT/WIT/JTB	MODIFICATION LEVEL		CIRCUIT MODIFICATIONS ARE NOT TO BE MADE WITHOUT AUTHORITY FROM THE OFFICE OF SIGNAL DESIGN	Date: 07/01/11 Des: WIT Chk: BDF AFE: 10554	UNION PACIFIC RAILROAD SHELBYVILLE, ILLINOIS TR 209 SALEM SUBDIVISION Office of Sr AVP Engineering - Signal/TCO Omaha, Nebraska	Sh.: 2 DOT 167874S MP: 195.96 ID: 030119596.2X
						Q.A. LAST LEVEL CHECKED	DU				
						LAST LEVEL MOD THIS TYPICAL	DU				
						LAST LEVEL BY DESIGNER	DU				
						CHANGED FROM TYPICAL?	Y				
						REV 01.24.11 4K SEARAC.2					

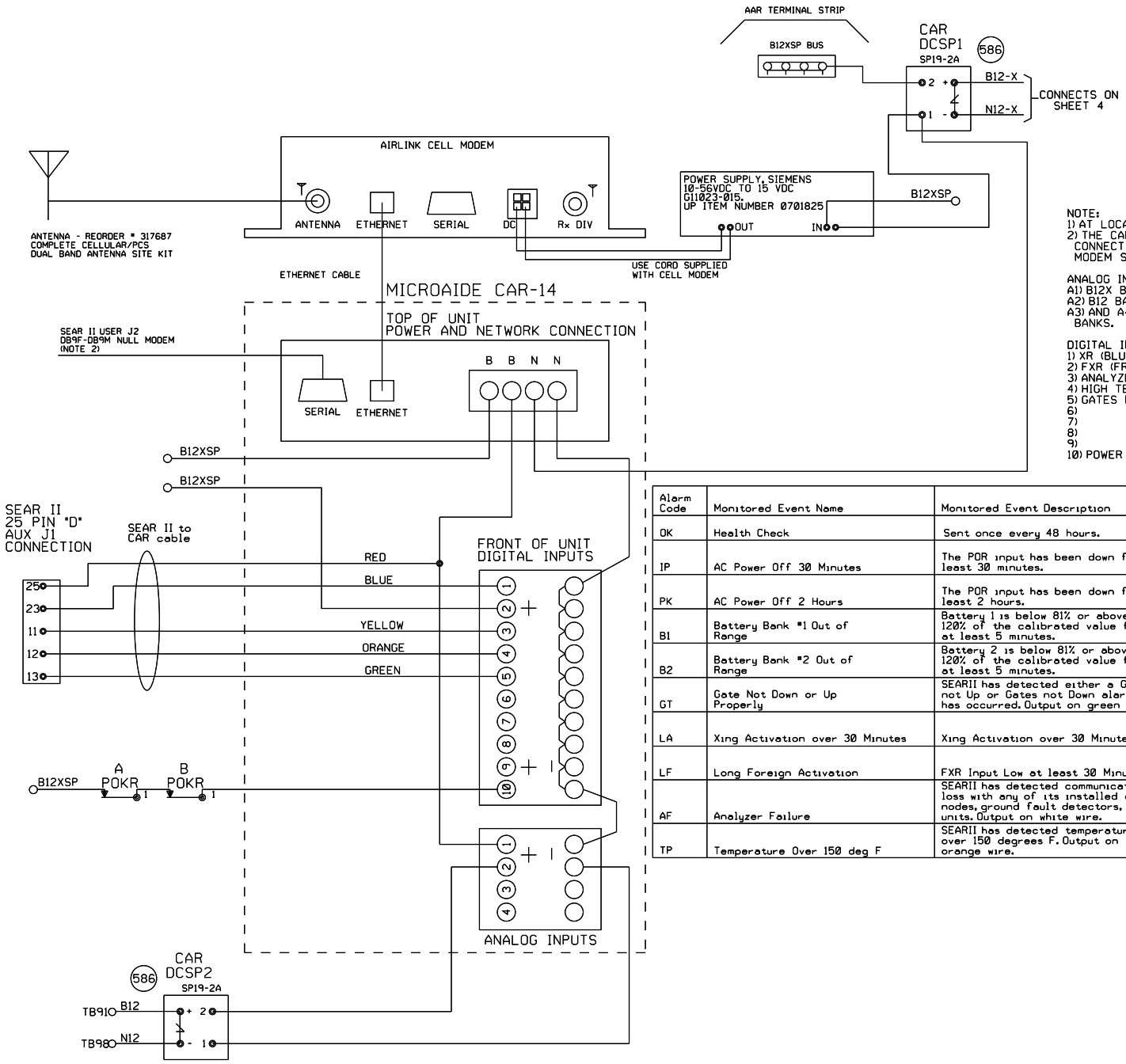

NOTE:
1) AT LOCATIONS WITH NO FOREIGN XR, JUMPER D2 TO B12XSP.
2) THE CAR14 SERIAL PORT IS AVAILABLE TO ADD REMOTE CONNECTIVITY TO THE SEARII. USE A DB9F TO DB9M NULL MODEM SERIAL CABLE.

ANALOG INPUTS:
A1) B12X BATTERY BANK, JUMPERED FROM CAR14 POWER INPUTS
A2) B12 BATTERY BANK
A3) AND A4) ARE AVAILABLE TO MONITOR ADDITIONAL BATTERY BANKS.

DIGITAL INPUTS (LOCATIONS WITH SEARII)
1) XR (BLUE WIRE)
2) FXR (FROM B12XSP THRU FRONT CONTACT)
3) ANALYZER FAILURE (WHITE WIRE)
4) HIGH TEMPERATURE (ORANGE WIRE)
5) GATES NOT UP OR DOWN PROPERLY (GREEN WIRE)
6)
7)
8)
9)
10) POWER OFF INDICATION: POR

Alarm Code	Monitored Event Name	Monitored Event Description	Alarm Cleared
OK	Health Check	Sent once every 48 hours.	
IP	AC Power Off 30 Minutes	The POR input has been down for at least 30 minutes.	The POR input comes back on for at least 5 minutes after an AC Power Off Alarm
PK	AC Power Off 2 Hours	The POR input has been down for at least 2 hours.	The POR input comes back on for at least 5 minutes after an AC Power Off Alarm
B1	Battery Bank #1 Out of Range	Battery 1 is below 81% or above 120% of the calibrated value for at least 5 minutes.	Battery 1 is within acceptable range for at least 5 minutes.
B2	Battery Bank #2 Out of Range	Battery 2 is below 81% or above 120% of the calibrated value for at least 5 minutes.	Battery 2 is within acceptable range for at least 5 minutes.
GT	Gate Not Down or Up Properly	SEARII has detected either a Gates not Up or Gates not Down alarm has occurred. Output on green wire.	The Gate Up or Gates Down indications indicated true after a Gate Not Down or Gate Not Up alarm was triggered.
LA	Xing Activation over 30 Minutes	Xing Activation over 30 Minutes	Crossing has recovered after a Long Activation Alarm had occurred.
LF	Long Foreign Activation	FXR Input Low at least 30 Minutes	FXR Input for 10 Sec.
AF	Analyzer Failure	SEARII has detected communication loss with any of its installed echelon nodes, ground fault detectors, or TSS units. Output on white wire.	Analyzer has recovered after an analyzer failure.
TP	Temperature Over 150 deg F	SEARII has detected temperature over 150 degrees F. Output on orange wire.	Temperature sensor inside SEAR detects temperature is OK after a Hi-Temp alarm.

Revised: 01-15-13
INSTALLED GATES AND A GCP 4000 IN A NEW BUNGALOW @ TR 209 M.P.195.96
Rec#: 18862 WO#: 10554
IS: 11-19-12 /BDF
MJD/WIT/WIT/JTB

MODIFICATION LEVEL	
O. A. LAST LEVEL CHECKED	DU
LAST LEVEL MOD THIS TYPICAL	DU
LAST LEVEL BY DESIGNER	DU
CHANGED FROM TYPICAL?	Y

rev 01.24.11 4K ACDCCAR14511.3

CIRCUIT MODIFICATIONS ARE NOT TO BE MADE WITHOUT AUTHORITY FROM THE OFFICE OF SIGNAL DESIGN

Date: 07/01/11
Des: WIT
Chk: TJD
AFE: 10554

UNION PACIFIC RAILROAD
SHELBYVILLE, ILLINOIS
TR 209
SALEM SUBDIVISION
Office of Sr AVP Engineering - Signal/TCO Omaha, Nebraska

Sh.: 2A
DOT 167874S
MP: 195.96
ID: 030119596.2AX

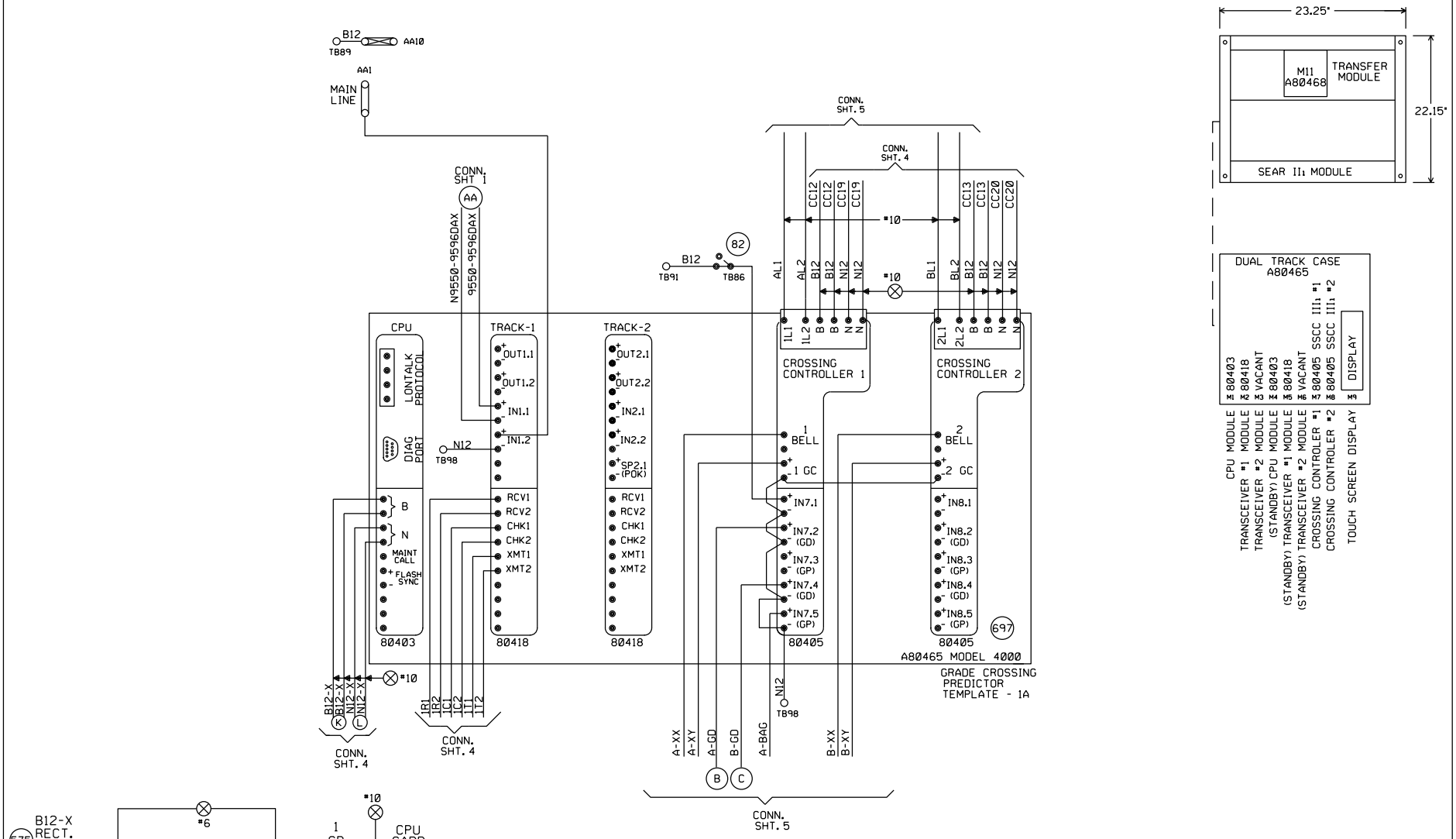

"MF" FREQUENCY (HZ)	MAXIMUM TRANSMIT WIRE LENGTH (FEET)
86	100
114	125
156	150
211	200
285-970	250

NOTE:
EACH TRANSMITTER TO RAIL WIRE FROM XMT1 AND XMT2 MUST NOT EXCEED THE MAXIMUM LENGTH SPECIFIED IN THE TABLE SHOWN. THE RECEIVER WIRE LENGTH IS NOT CRITICAL. DOES NOT APPLY TO 6 TRACK WIRE APPLICATION.

Revised: 01-15-13
INSTALLED GATES AND A GCP 4000 IN A NEW BUNGALOW @ TR 209 M.P.195.96
Rec*: 18862 WO*: 10554
IS: 11-19-12 /BDF
MJD/WIT/WIT/JTB

MODIFICATION LEVEL	
Q. A. LAST LEVEL CHECKED	DU
LAST LEVEL MOD THIS TYPICAL	DU
LAST LEVEL BY DESIGNER	DU
CHANGED FROM TYPICAL?	Y

REV 01.24.11 4K 2TKGF.3

CIRCUIT MODIFICATIONS ARE NOT TO BE MADE WITHOUT AUTHORITY FROM THE OFFICE OF SIGNAL DESIGN

Date: 07/01/11
Des: WIT
Chk: BDF
AFE: 10554

UNION PACIFIC RAILROAD
SHELBYVILLE, ILLINOIS
TR 209
SALEM SUBDIVISION
Office of Sr AVP Engineering - Signal/TCO Omaha, Nebraska

Sh.: 3
DOT 167874S
MP: 195.96
ID: 030119596.3X

Minimum Program Steps Report

Location and SIN

DOT Number: 167874S
Milepost Number: 195.96
Site Name: TR-209 Shelbyville, IL

SIN: 762010010016 *

* Parameter is part of office check number calculation.

MCF and Template Selection

MCF Name: GCP-T6X-02-4.mcf
MCF Revision: 24
MCFCRC: 09FC363B
Geo Unit UCN: FFFFFFFF

Template = 1A:6 Trk Bi (OCCN) *

* Parameter is part of office check number calculation.

Minimum Program Steps

TEMPLATE: track 1-Bi, Island
Track 1 : GCP Frequency = 156 Hz (Field,TCN)
Track 1 : Approach Distance = 3184 ft (Set in Field,TCN)
Track 1 : Prime Warning Time = 26 sec (OCCN) *
Track 1 : Prime UAX = IP (OCCN) *
Track 1 : Prime UAX Pickup = 15 sec (OCCN) *
Track 1 : GCP Transmit Level = High (Set in Field,TCN)
Track 1 : Isl Frequency = 11.5 kHz (Set in Field)

TEMPLATE: AND 1 XR
AND 1 Enable Used = Yes (OCCN) *

TEMPLATE: SSCC
SSCC 1 : Lamp Neutral Test = Off (Set in Field)
SSCC 2 : Lamp Neutral Test = Off (Set in Field)

TEMPLATE: OOS
OOS Control = Display+OOS IPs (OCCN) *
OOS Timeout = 1 hrs (Set in Field)

TEMPLATE: IP assignment 1
IN 1.1 = T1 Prime UAX (OCCN) *
IN 1.2 = Out Of Service IP 1 (OCCN) *

TEMPLATE: IP assignment SSCC
IN 7.1 = AND 1 XR Enable (OCCN) *

GCP: track 1
Track 1 : Island Distance = 137 ft (Set in Field,TCN)

ADVANCED: site options
Daylight Savings = Off (Set in Field)

SSCC
Bell On Gate Rising = Yes (OCCN) *

* Parameter is part of office check number calculation.

Check Numbers

Office Check Number: 55C82E38
Config. Check Number: 25189848
(Based on MCF Revision 24)

Parameters not part of office check number calculation:

Track 1 : GCP Frequency = 156 Hz
Track 1 : Approach Distance = 3184 ft (Set in Field)
Track 1 : GCP Transmit Level = High (Set in Field)
Track 1 : Isl Frequency = 11.5 kHz
SSCC 1 : Lamp Neutral Test = Off (Set in Field)
SSCC 2 : Lamp Neutral Test = Off (Set in Field)
OOS Timeout = 1 hrs (Set in Field)
Track 1 : Island Distance = 137 ft (Set in Field)
Daylight Savings = Off (Set in Field)

Comments

<none>

Configuration Package File

Filename: 030119596_167874S.pac
Path: C:\FIELD AC PAC FILES\
Date/Time: 1/25/2013 15:29:07

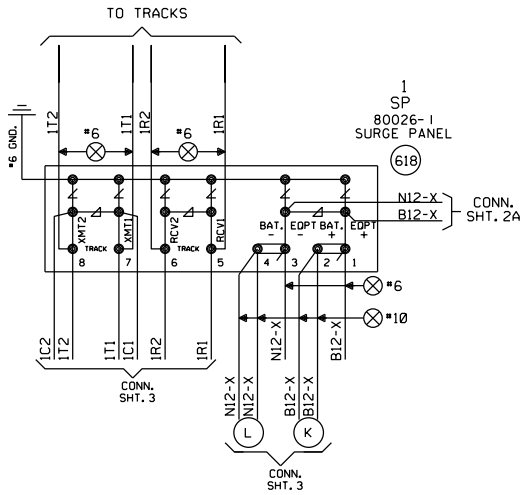

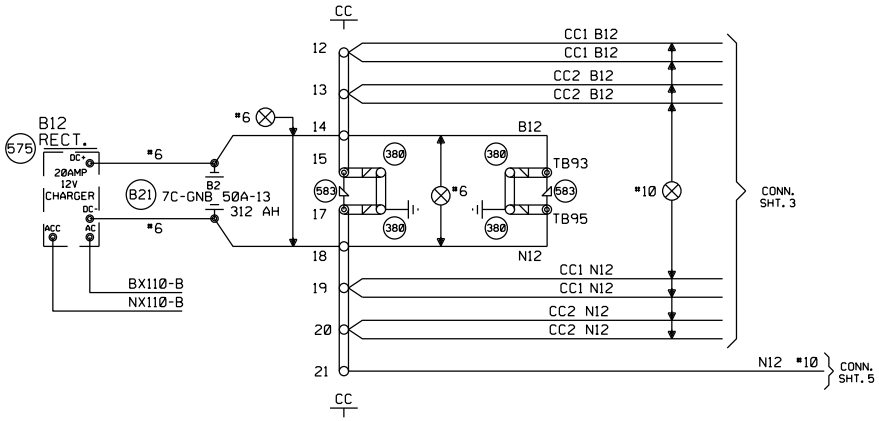

Revised: 01-15-13 INSTALLED GATES AND A GCP 4000 IN A NEW BUNGALOW @ TR 209 M.P.195.96 Rec#: 18862 WO#: 10554 IS: 11-19-12 /BDF MJD/WIT/WIT/JTB	MODIFICATION LEVEL		CIRCUIT MODIFICATIONS ARE NOT TO BE MADE WITHOUT AUTHORITY FROM THE OFFICE OF SIGNAL DESIGN	Date: 07/01/11 Des: WIT Chk: BDF AFE: 10554	UNION PACIFIC RAILROAD SHELBYVILLE, ILLINOIS TR 209 SALEM SUBDIVISION Office of Sr AVP Engineering - Signal/TCO Omaha, Nebraska	Sh.: 4 DOT 167874S MP: 195.96 ID: 030119596.4X
	Q.A. LAST LEVEL CHECKED	DU				
	LAST LEVEL MOD THIS TYPICAL	DU				
	LAST LEVEL BY DESIGNER	DU				
	CHANGED FROM TYPICAL?	Y				
	REV 01.24.11 4K 4TKSPGFC.4					

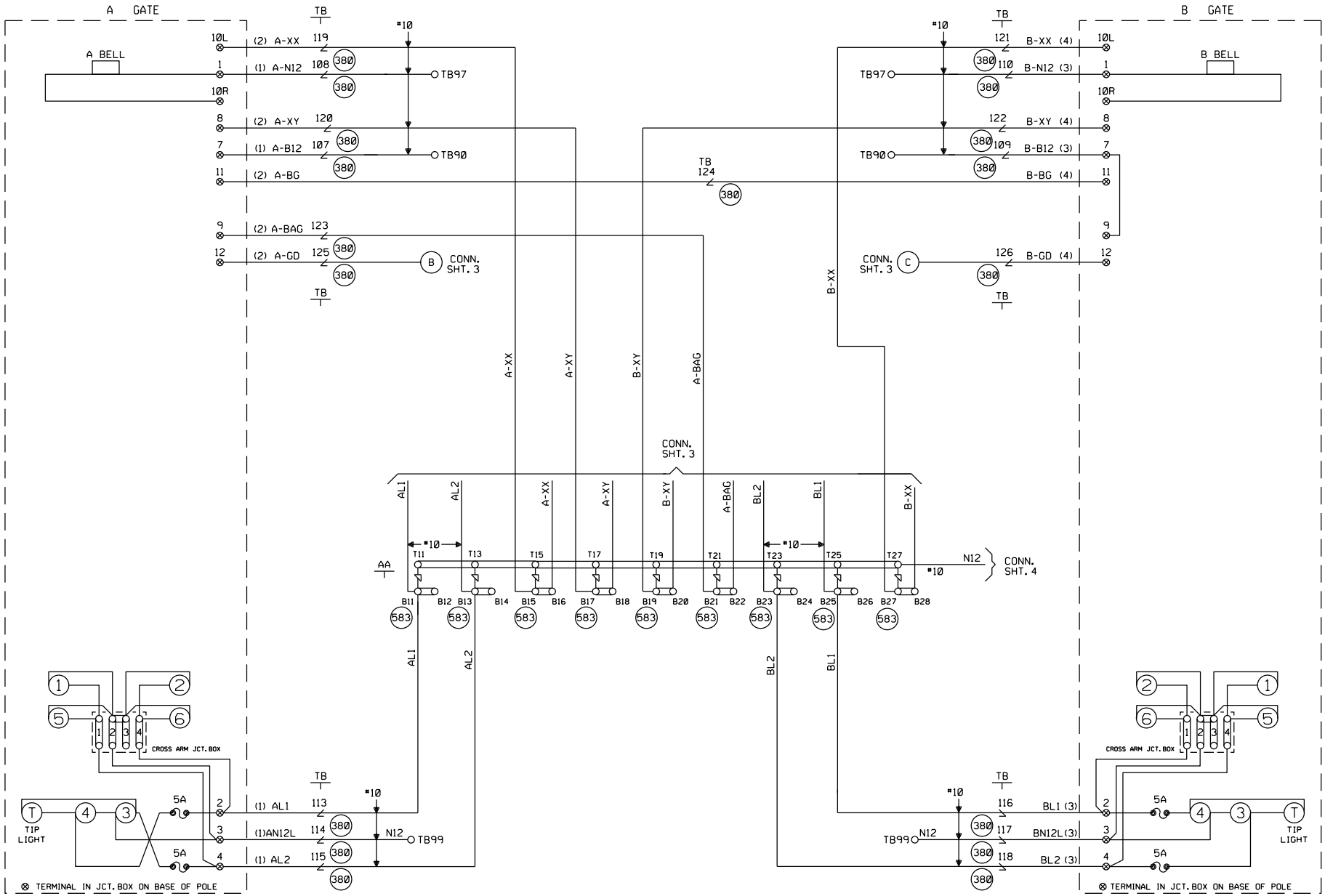

CABLE TABULATION

CABLE NO. 1 5C. NO.6 U.G.B.T. TO GATE A
CABLE NO. 2 7C. NO.14 U.G.B.T. TO GATE A
CABLE NO. 3 5C. NO.6 U.G.B.T. TO GATE B
CABLE NO. 4 7C. NO.14 U.G.B.T. TO GATE B

Revised: 01-15-13
INSTALLED GATES AND A GCP 4000 IN A NEW BUNGALOW @ TR 209 M.P.195.96
Rec#: 18862 WO#: 10554
IS: 11-19-12 /BDF
MJD/WIT/WIT/JTB

MODIFICATION LEVEL	
O.A. LAST LEVEL CHECKED	DU
LAST LEVEL MOD THIS TYPICAL	DU
LAST LEVEL BY DESIGNER	DU
CHANGED FROM TYPICAL?	Y

REV 01.24.11 4K GFCTYP.5

CIRCUIT MODIFICATIONS ARE NOT TO BE MADE WITHOUT AUTHORITY FROM THE OFFICE OF SIGNAL DESIGN

Date: 07/01/11
Des: WIT
Chk: BDF
AFE: 10554

UNION PACIFIC RAILROAD
SHELBYVILLE, ILLINOIS
TR 209
SALEM SUBDIVISION
Office of Sr AVP Engineering - Signal/TCO Omaha, Nebraska

Sh.: 5
DOT 167874S
MP: 195.96
ID: 030119596.5X

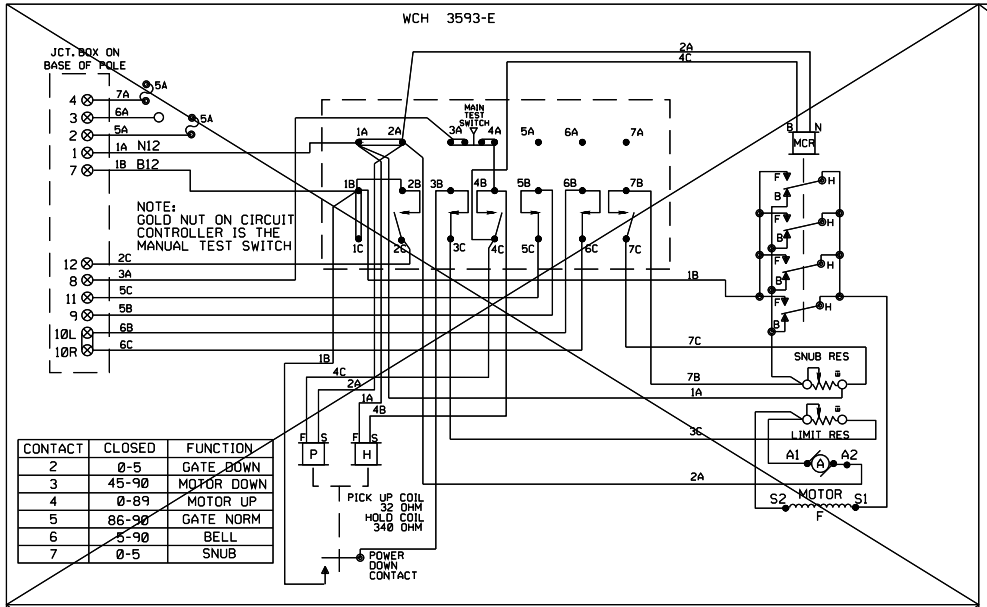

CONTACT	CLOSED	FUNCTION
2	0-5	GATE DOWN
3	45-90	MOTOR DOWN
4	0-89	MOTOR UP
5	86-90	GATE NORM
6	5-90	BELL
7	0-5	SNUB

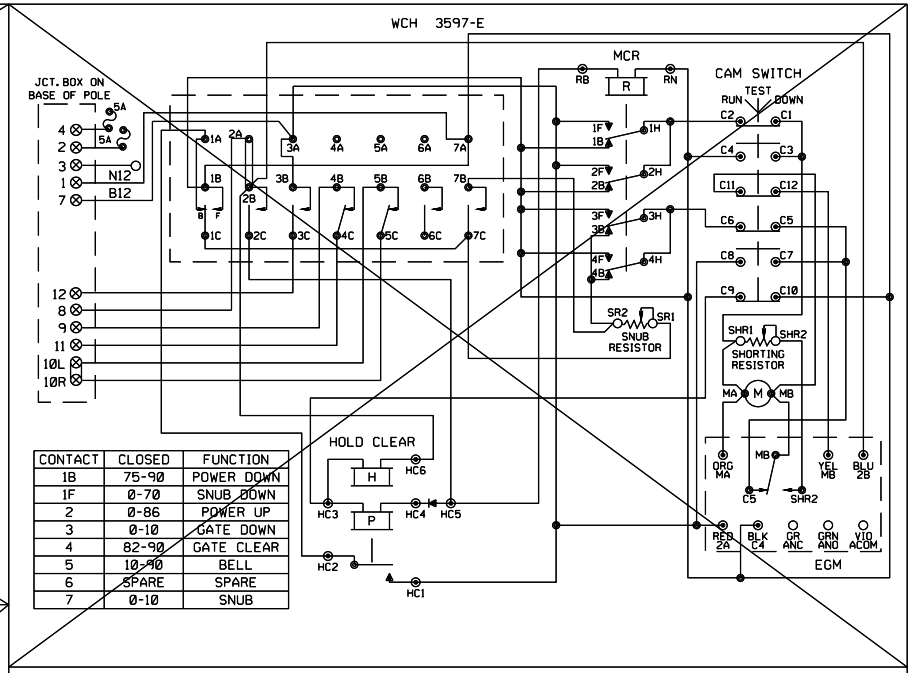

CONTACT	CLOSED	FUNCTION
1B	75-90	POWER DOWN
1F	0-70	SNUB DOWN
2	0-86	POWER UP
3	0-10	GATE DOWN
4	82-90	GATE CLEAR
5	10-90	BELL
6	SPARE	SPARE
7	0-10	SNUB

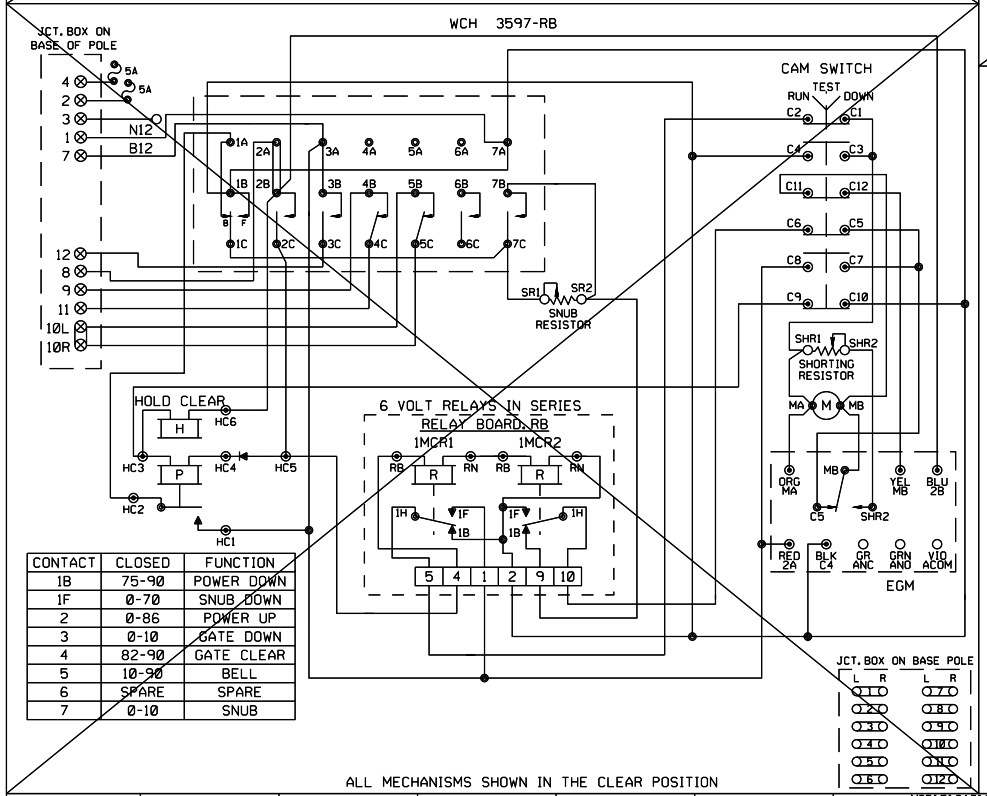

CONTACT	CLOSED	FUNCTION
1B	75-90	POWER DOWN
1F	0-70	SNUB DOWN
2	0-86	POWER UP
3	0-10	GATE DOWN
4	82-90	GATE CLEAR
5	10-90	BELL
6	SPARE	SPARE
7	0-10	SNUB

ALL MECHANISMS SHOWN IN THE CLEAR POSITION

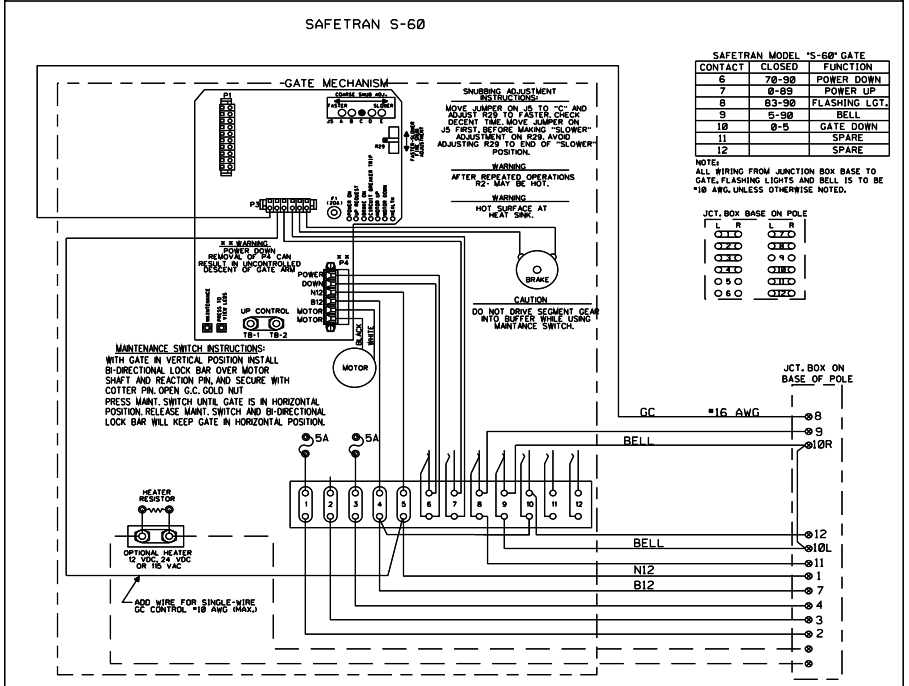

SAFETRAN MODEL "S-60" GATE

CONTACT	CLOSED	FUNCTION
6	70-90	POWER DOWN
7	0-89	POWER UP
8	63-90	FLASHING LGT.
9	5-90	BELL
10	0-5	GATE DOWN
11		SPARE
12		SPARE

NOTE:
ALL WIRING FROM JUNCTION BOX BASE TO GATE, FLASHING LIGHTS AND BELL IS TO BE #10 AWG. UNLESS OTHERWISE NOTED.

JCT. BOX BASE ON POLE

L	R	L	R
1	1	7	7
2	2	8	8
3	3	9	9
4	4	10	10
5	5	11	11
6	6	12	12

Revised: 01-15-13	MODIFICATION LEVEL		CIRCUIT MODIFICATIONS ARE NOT TO BE MADE WITHOUT AUTHORITY FROM THE OFFICE OF SIGNAL DESIGN	Date: 07/01/11	UNION PACIFIC RAILROAD	Sh.: 6
INSTALLED GATES AND A GCP 4000 IN A NEW BUNGALOW @ TR 209 M.P.195.96	O.A. LAST LEVEL CHECKED	DU		Des: WIT	SHELBYVILLE, ILLINOIS TR 209 SALEM SUBDIVISION	DOT 167874S
	LAST LEVEL MOD THIS TYPICAL	DU		Chk: BDF		MP: 195.96
Rec#: 18862 WO#: 10554	LAST LEVEL BY DESIGNER	DU		AFE: 10554	Office of Sr AVP Engineering - Signal/TCO Omaha, Nebraska	ID: 030119596.6X
Is: 11-19-12 BDF MJD/WIT/WIT/JTB	CHANGED FROM TYPICAL?	N				
	REV 01.24.11 4K GWIRING.7					

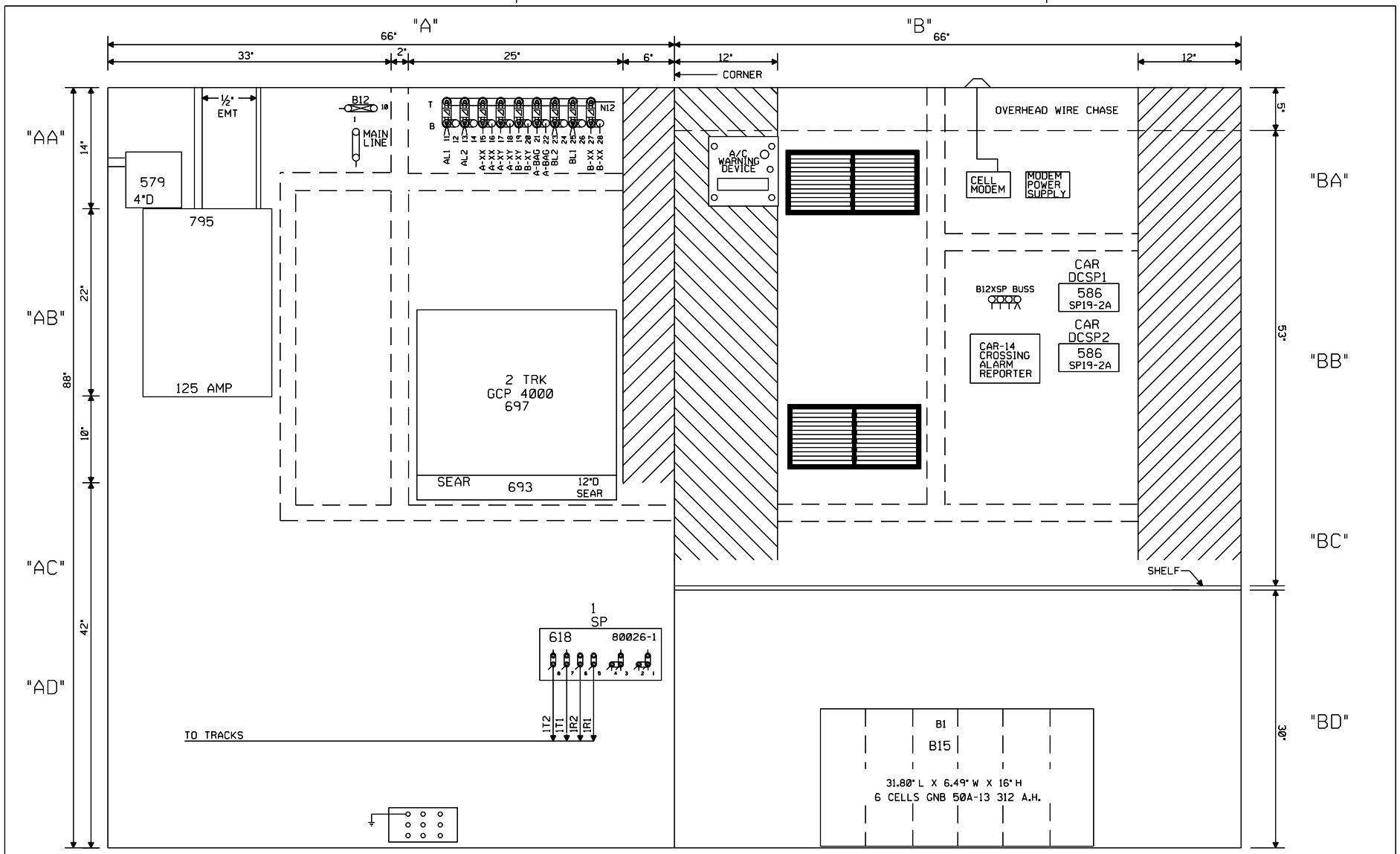

NOTE: ALL DIMENSIONS SHOWN ARE APPROXIMATE.

					Revised: 01-15-13 INSTALLED GATES AND A GCP 4000 IN A NEW BUNGALOW @ TR 209 M.P.195.96 Rec#: 18862 WO#: 10554 IS: 11-19-12 /BDF MJD/WIT/WIT/JTB	MODIFICATION LEVEL Q.A. LAST LEVEL CHECKED DU LAST LEVEL MOD THIS TYPICAL DU LAST LEVEL BY DESIGNER DU CHANGED FROM TYPICAL? Y rev 01.24.11 4K 4TKGFC.8	CIRCUIT MODIFICATIONS ARE NOT TO BE MADE WITHOUT AUTHORITY FROM THE OFFICE OF SIGNAL DESIGN	Date: 07/01/11 Des: WIT Chk: BDF AFE: 10554	UNION PACIFIC RAILROAD SHELBYVILLE, ILLINOIS TR 209 SALEM SUBDIVISION Office of Sr AVP Engineering - Signal/TCO Omaha, Nebraska	Sh.: 7 DOT 167874S MP: 195.96 ID: 030119596.7X

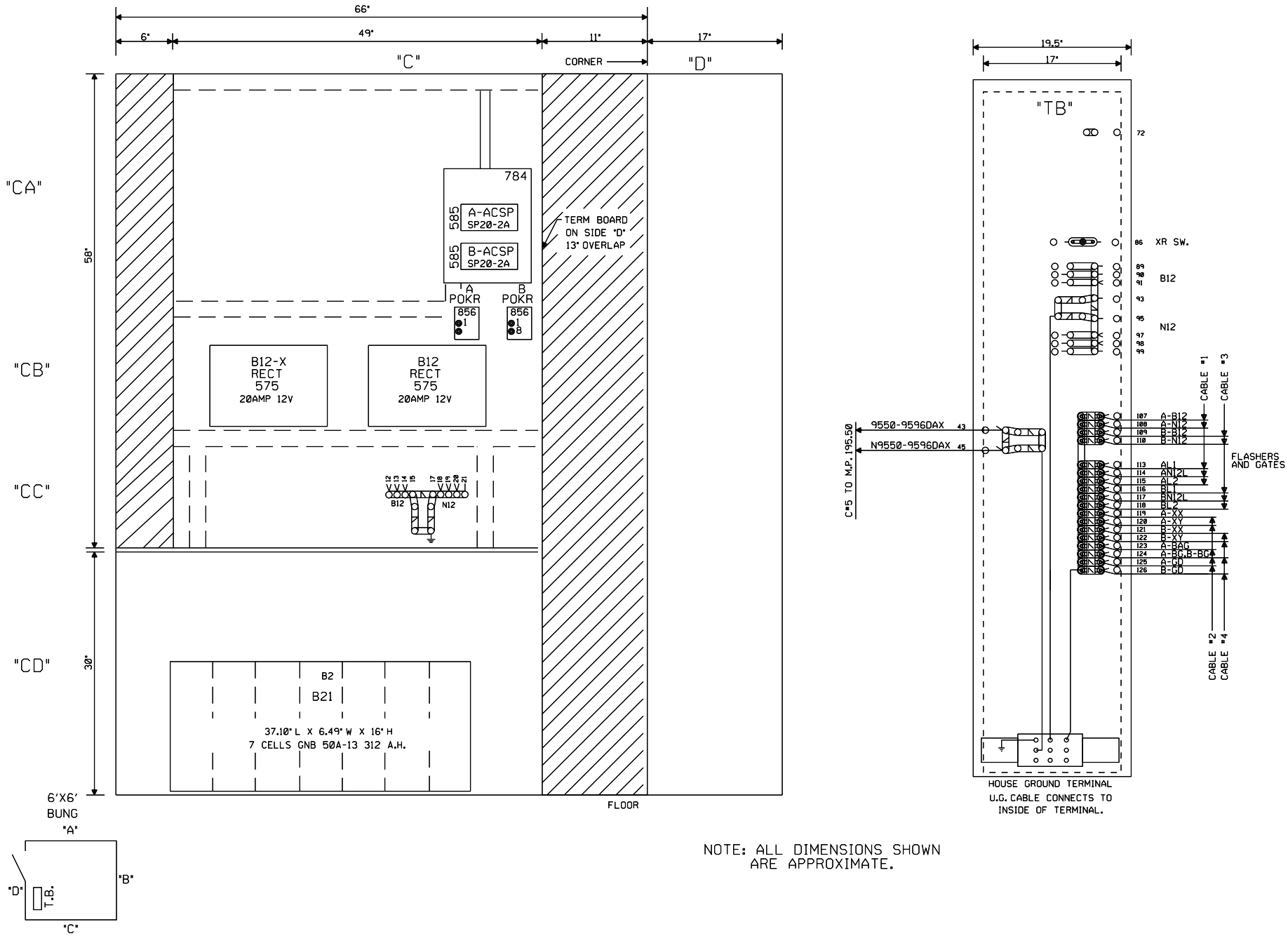

NOTE: ALL DIMENSIONS SHOWN
ARE APPROXIMATE.

Revised: 01-15-13 INSTALLED GATES AND A GCP 4000 IN A NEW BUNGALOW @ TR 209 M.P.195.96 Rec#: 18862 WO#: 10554 IS: 11-19-12 /BDF MJD/WIT/WIT/JTB	MODIFICATION LEVEL		CIRCUIT MODIFICATIONS ARE NOT TO BE MADE WITHOUT AUTHORITY FROM THE OFFICE OF SIGNAL DESIGN	Date: 07/01/11 Des: WIT Chk: BDF AFE: 10554	UNION PACIFIC RAILROAD SHELBYVILLE, ILLINOIS TR 209 SALEM SUBDIVISION Office of Sr AVP Engineering - Signal/TCO Omaha, Nebraska	Sh.: 8 DOT 167874S MP: 195.96 ID: 030119596.8X
	Q. A. LAST LEVEL CHECKED	DU				
	LAST LEVEL MOD THIS TYPICAL	DU				
	LAST LEVEL BY DESIGNER	DU				
	CHANGED FROM TYPICAL? REV 01.24.11 4K GFC.9	Y				