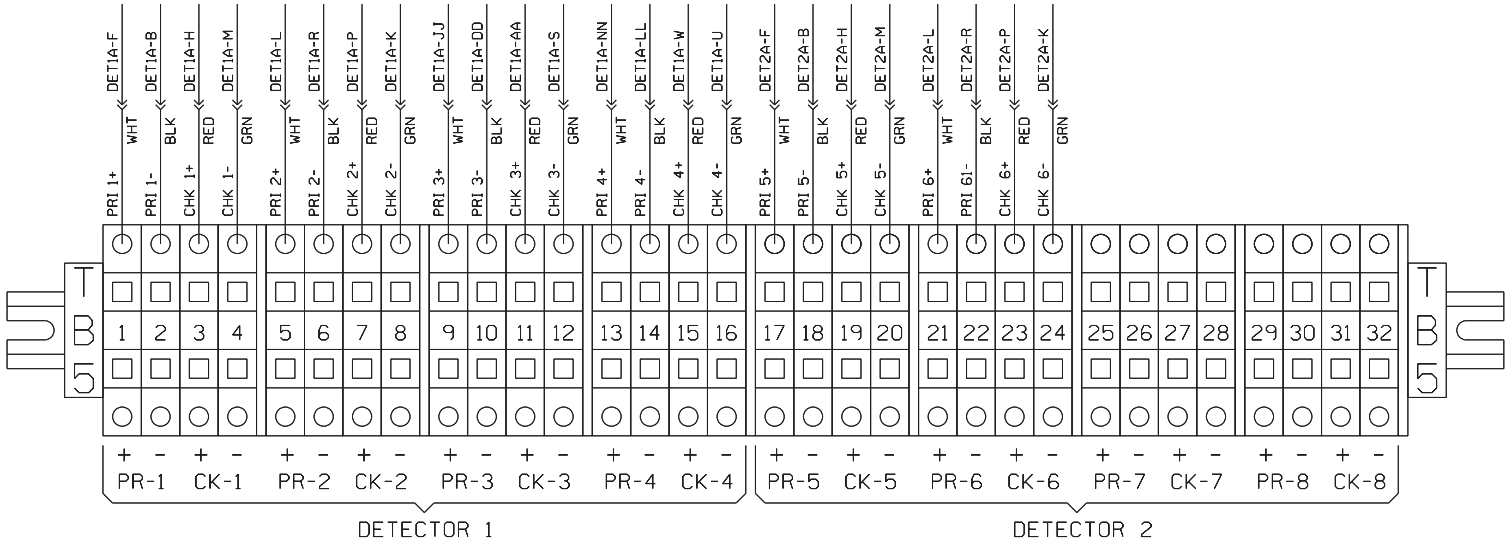

NEW SHEET

Designed: 09/25/13
UPGRADE DWIGHT SIDING, M.P. 68.33 TO M.P. 74.97
PID: 83019 WO#: 20521
Is: /MWK
Rec'd: / /WIT /RLL

CIRCUIT MODIFICATIONS ARE NOT TO BE MADE WITHOUT AUTHORITY FROM THE OFFICE OF SIGNAL DESIGN

Date: 9/25/13
Des: WIT Chk: MWK
PID: 83019
AFE: 20521

UNION PACIFIC RAILROAD
DWIGHT, ILLINOIS
LIVINGSTON ROAD
JOLIET SUBDIVISION
Office of AVP Engineering - Signal Omaha, Nebraska

Sh.: 9C
DOT 290535W
MP: 71.92
ID: CSL7192.9CX

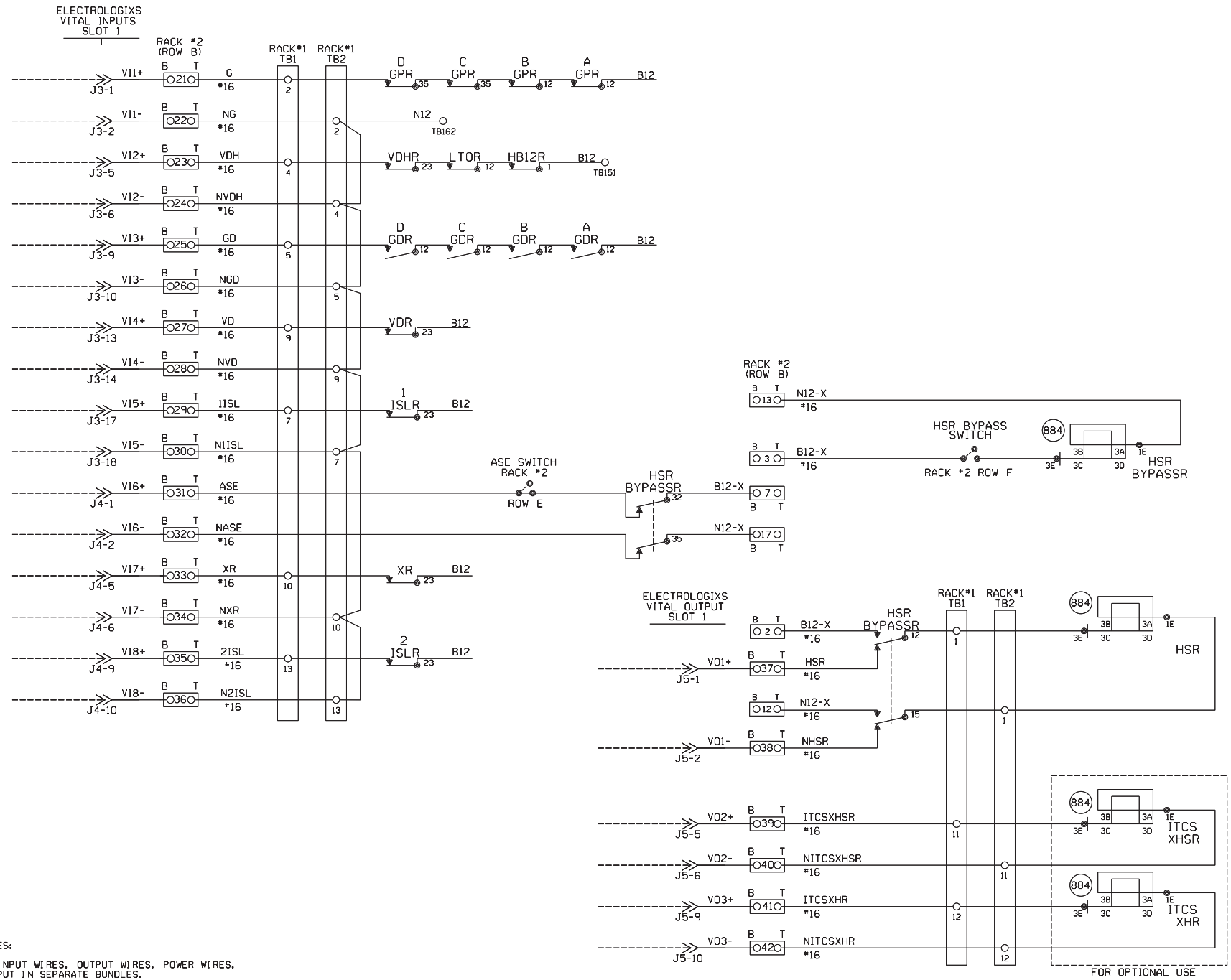

NOTES:

1. INPUT WIRES, OUTPUT WIRES, POWER WIRES, PUT IN SEPARATE BUNDLES.
2. ALL WIRES #16 UNLESS NOTED.
3. O?? O 2 POSITION WAGO BLOCK.

NEW SHEET

Designed: 09/25/13
UPGRADE DWIGHT SIDING, M.P. 68.33 TO M.P. 74.92
PID: 83019 WO#: 20521 /MWK
Es: /
Rec'd: / /WIT /RLL

CIRCUIT MODIFICATIONS ARE NOT TO BE MADE WITHOUT AUTHORITY FROM THE OFFICE OF SIGNAL DESIGN

Date: 9/25/13
Des: WIT Chk: MWK
PID: 83019
AFE: 20521

UNION PACIFIC RAILROAD

DWIGHT, ILLINOIS
LIVINGSTON ROAD
JOLIET SUBDIVISION

Office of AVP Engineering - Signal Omaha, Nebraska

Sh.: 10
DOT 290535W
MP: 71.92
ID: CSL7192.10X

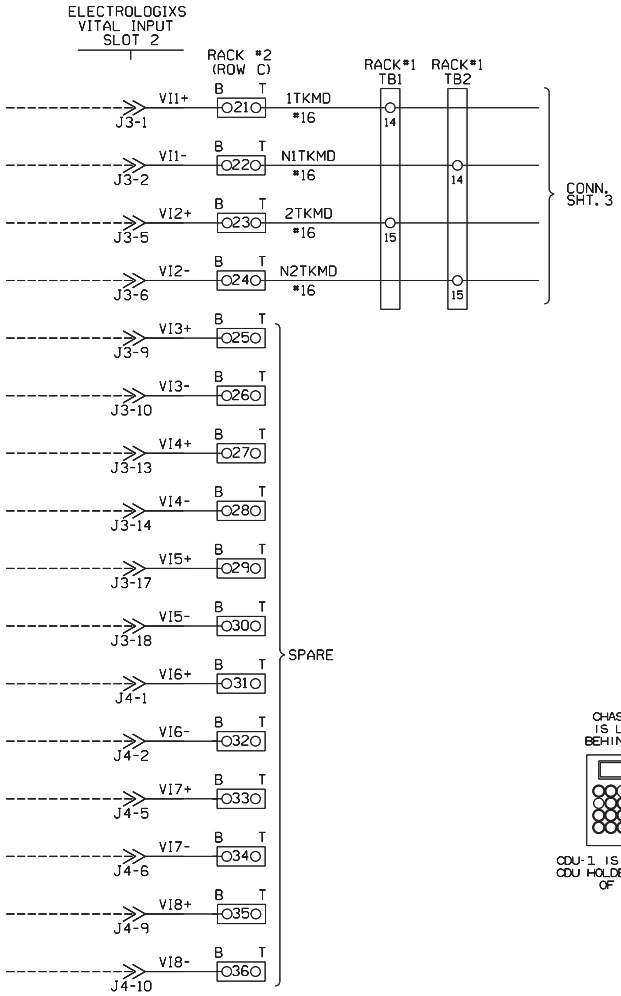

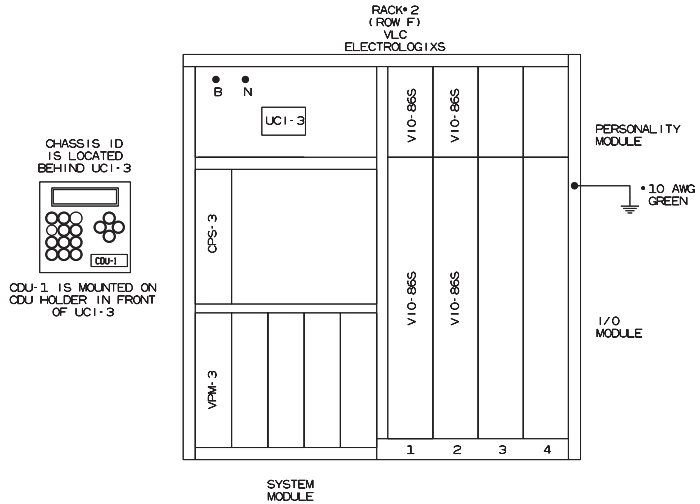

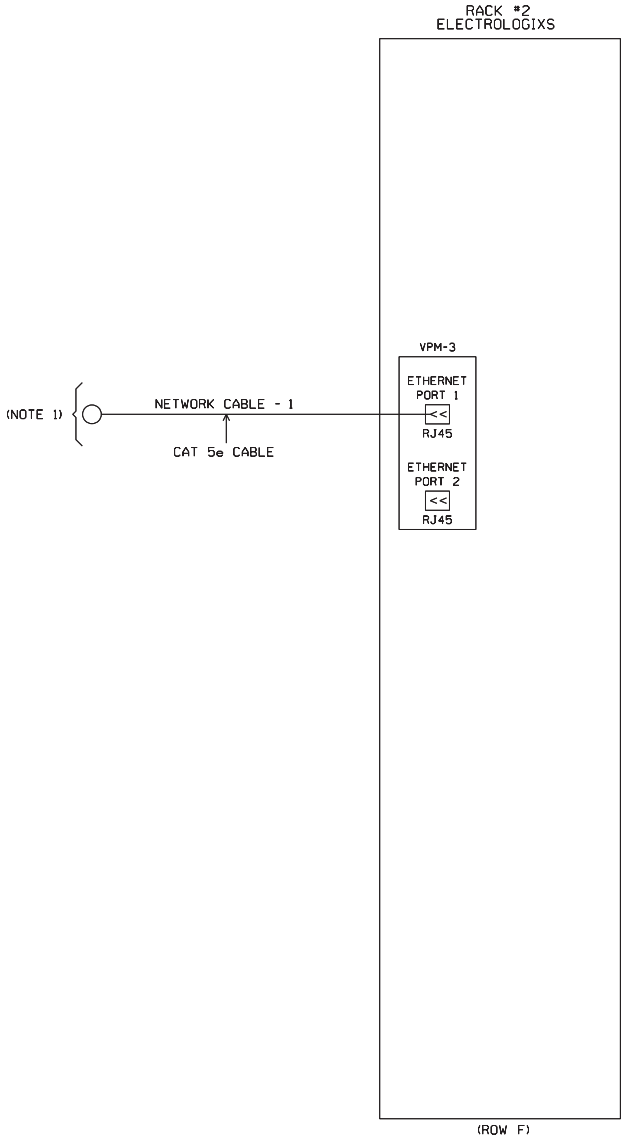

CKSUM: _____
CRC: _____

○ = TAB INTACT
● = TAB PUNCHED OUT

NOTES:

1. TO NETWORK SWITCH (SUPPLIED BY RR).
2. INPUT WIRES, OUTPUT WIRES, POWER WIRES, PUT IN SEPARATE BUNDLES.
3. ALL WIRES #16 UNLESS NOTED.
4. O?? O 2 POSITION WAGO BLOCK.

NEW SHEET

Designed: 09/25/13
UPGRADE DWIGHT SIDING, M.P. 68.33 TO M.P. 74.92
PID: 83019 WO#: 20521 /MWK
Es: /
Rec'd: / /WIT /RLL

CIRCUIT MODIFICATIONS ARE NOT TO BE MADE WITHOUT AUTHORITY FROM THE OFFICE OF SIGNAL DESIGN

Date: 9/25/13	
Des: WIT Chk: MWK	
PID: 83019	
AFE: 20521	

UNION PACIFIC RAILROAD

DWIGHT, ILLINOIS
LIVINGSTON ROAD
JOLIET SUBDIVISION

Office of AVP Engineering - Signal Omaha, Nebraska

Sh.:	10A
DOT	290535W
MP:	71.92
ID:	CSL7192.10AX

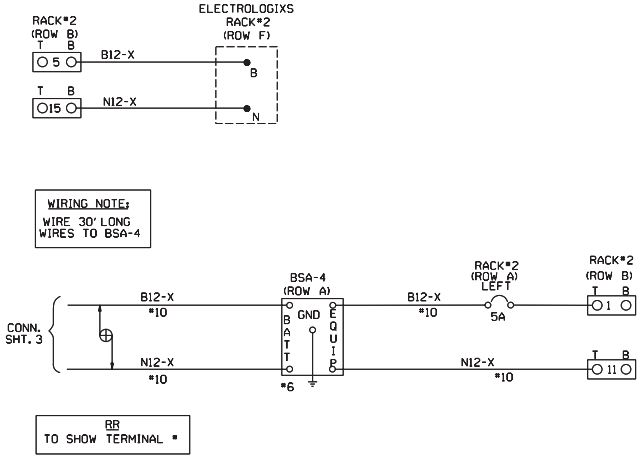

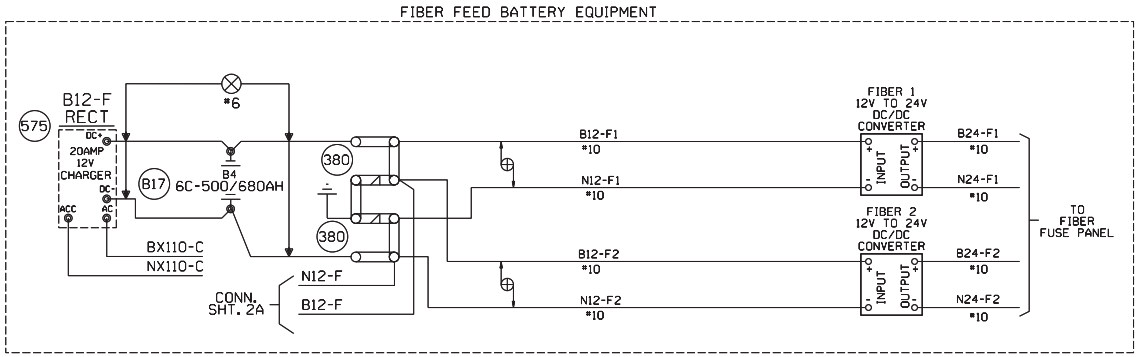

NOTES:

DENOTES TWISTED PAIR

2 POSITION WAGO BLOCK

NEW SHEET

Designed: 09/25/13
UPGRADE DWIGHT SIDING, M.P. 68.33 TO M.P. 74.92
PID: 83019 WO#: 20521 /MWK
Es: /
Rec'd: / /WIT /RLL

CIRCUIT MODIFICATIONS ARE NOT TO BE MADE WITHOUT AUTHORITY FROM THE OFFICE OF SIGNAL DESIGN

Date: 9/25/13	UNION PACIFIC RAILROAD	Sh.: 10B	
Des: WIT Chk: MWK	DWIGHT, ILLINOIS LIVINGSTON ROAD JOLIET SUBDIVISION	DOT 290535W	
PID: 83019		MP: 71.92	
AFE: 20521	Office of AVP Engineering - Signal Omaha, Nebraska	ID: CSL7192.10BX	

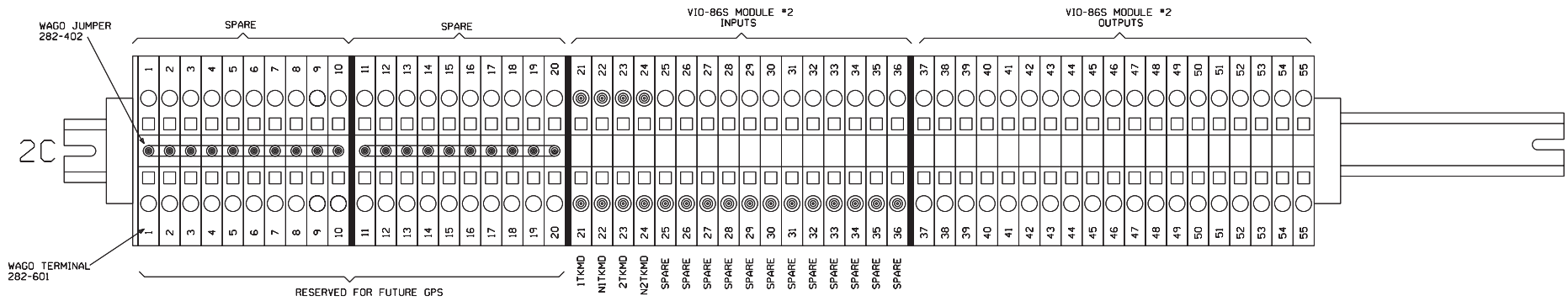

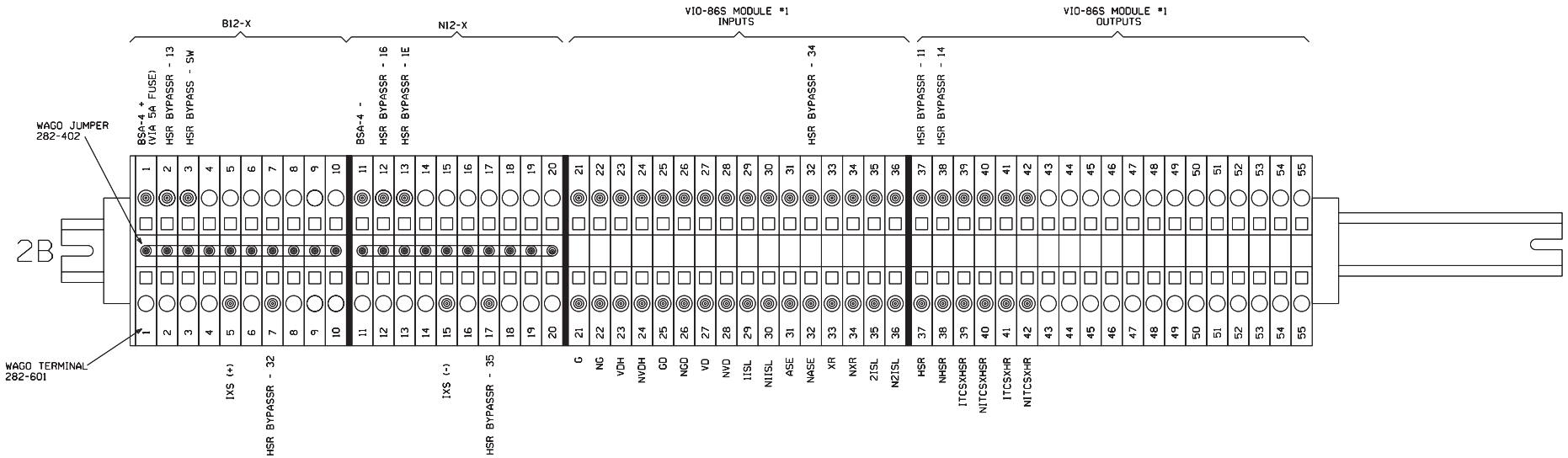

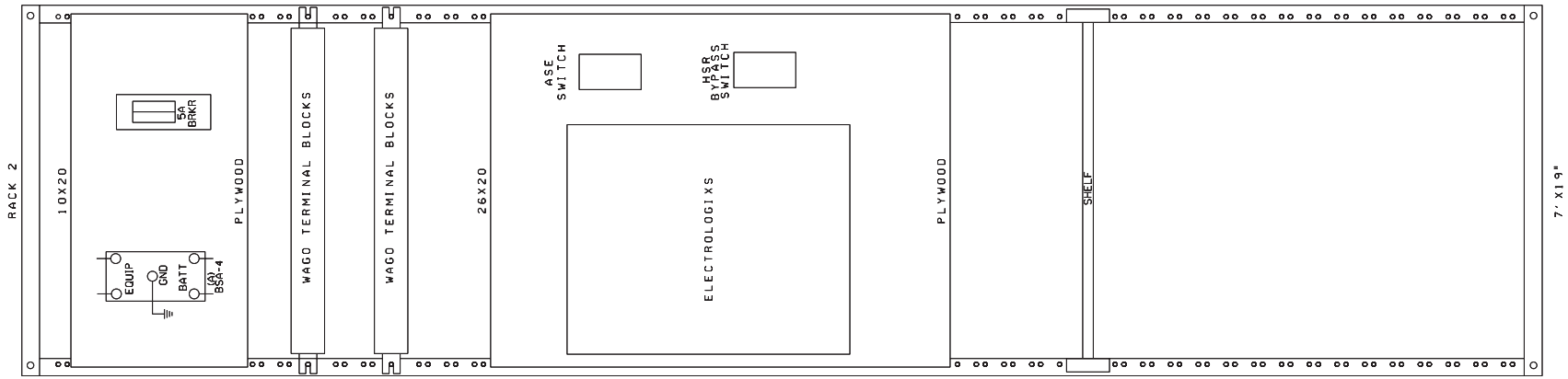

A B C D E F G H J K

NEW SHEET

Designed: 09/25/13
UPGRADE DWIGHT SIDING, M.P. 68.33 TO M.P. 74.92
PID: 83019 WO#: 20521
Es: /MWK
Rec'd: / /WIT /RLL

CIRCUIT MODIFICATIONS ARE NOT TO BE MADE WITHOUT AUTHORITY FROM THE OFFICE OF SIGNAL DESIGN

Date: 9/25/13
Des: WIT Chk: MWK
PID: 83019
AFE: 20521

UNION PACIFIC RAILROAD

DWIGHT, ILLINOIS
LIVINGSTON ROAD
JOLIET SUBDIVISION

Office of AVP Engineering - Signal Omaha, Nebraska

Sh.: 10C
DOT 290535W
MP: 71.92
ID: CSL7192.10CX

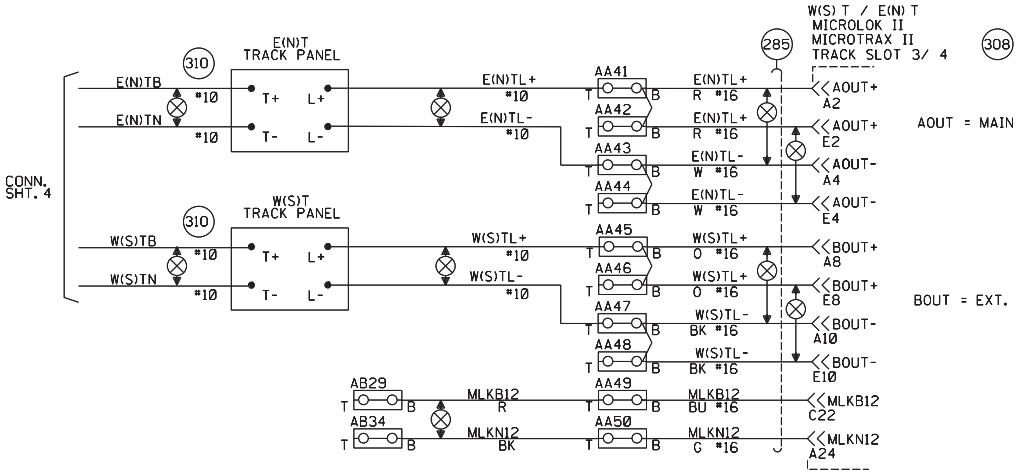

NOTES:

⊘ = OBSERVE CORRECT POLARITY. EQUIPMENT WILL BE DAMAGED IF CONNECTIONS ARE REVERSED

ENSURE TRACK POLARITY IS TRANSPOSED ACROSS ALL INSULATED JOINTS.

⧖ = TEST TERMINALS MUST BE INSTALLED ON ALL WIRING CONNECTED TO EXTERNAL CABLES (EXCEPT TRACK AND A.C. POWER WIRES).

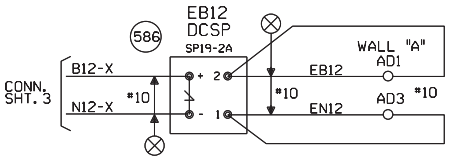

NEW SHEET

Designed: 09/25/13
UPGRADE DWIGHT SIDING, M.P. 68.33 TO M.P. 74.97
PID: 83019 WO#: 20521
IS: / MWK
Rec#: / /WIT /RLL

MODIFICATION LEVEL	
Q. A. LAST LEVEL CHECKED	DU
LAST LEVEL MOD THIS TYPICAL	DU
LAST LEVEL BY DESIGNER	DU
CHANGED FROM TYPICAL?	Y

REV 10/3/13 1TMLHBINT.1S.DGN

CIRCUIT MODIFICATIONS ARE NOT TO BE MADE WITHOUT AUTHORITY FROM THE OFFICE OF SIGNAL DESIGN

Date: 9/25/13
Des: WIT Chk: MWK
PID: 83019
AFE: 20521

UNION PACIFIC RAILROAD

DWIGHT, ILLINOIS
LIVINGSTON ROAD
JOLIET SUBDIVISION

Office of AVP Engineering - Signal Omaha, Nebraska

Sh.: 11
DOT 290535W
MP: 71.92
ID: CSL7192.11S

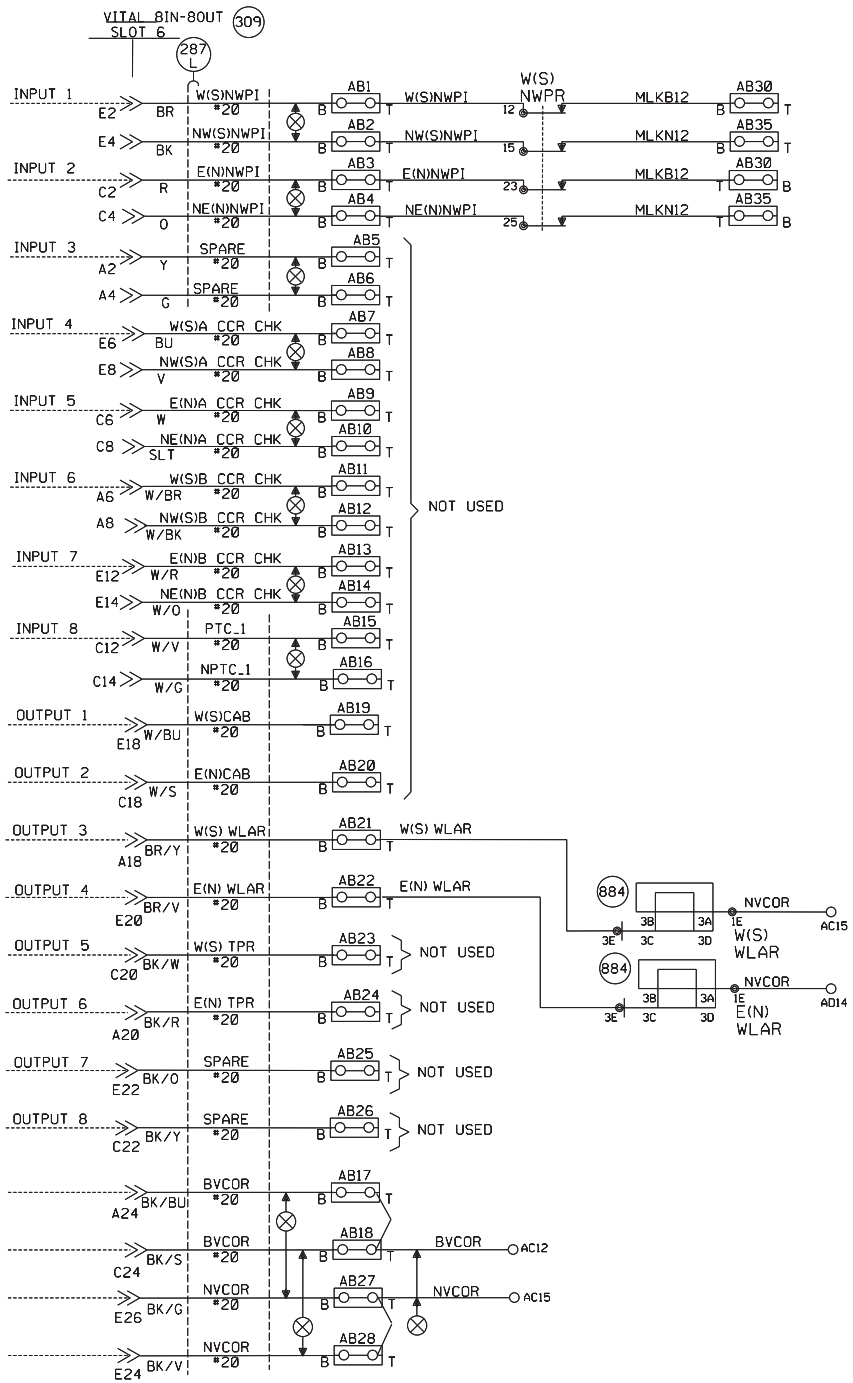

NEW SHEET

Designed: 09/25/13
UPGRADE DWIGHT SIDING, M.P. 68.33 TO M.P. 74.97
PID: 83019 WO#: 20521
IS: / MWK
Rec#: / /WIT /RLL

MODIFICATION LEVEL	
Q. A. LAST LEVEL CHECKED	DU
LAST LEVEL MOD THIS TYPICAL	DU
LAST LEVEL BY DESIGNER	DU
CHANGED FROM TYPICAL?	Y

REV 10/3/13 1TMLHBINT.4.DGN

CIRCUIT MODIFICATIONS ARE NOT TO BE MADE WITHOUT AUTHORITY FROM THE OFFICE OF SIGNAL DESIGN

Date: 9/25/13
Des: WIT Chk: MWK
PID: 83019
AFE: 20521

UNION PACIFIC RAILROAD

DWIGHT, ILLINOIS
LIVINGSTON ROAD
JOLIET SUBDIVISION

Office of AVP Engineering - Signal Omaha, Nebraska

Sh.: 11A
DOT 290535W
MP: 71.92
ID: CSL7192.11AS

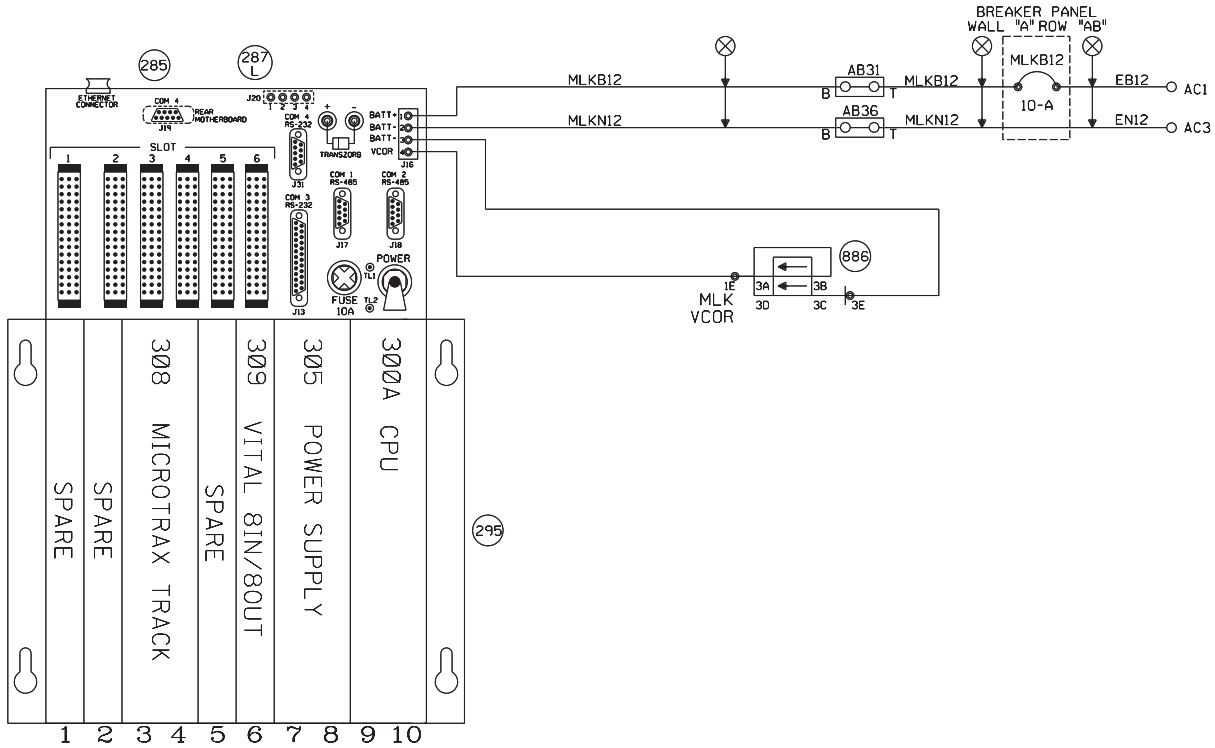

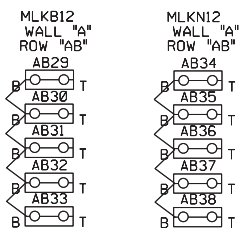

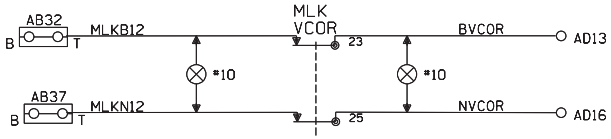

NEW SHEET

Designed: 09/25/13
UPGRADE DWIGHT SIDING, M.P. 68.33 TO M.P. 74.97
PID: 83019 WO#: 20521
IS: / MWK
Rec#: / WIT / RLL

MODIFICATION LEVEL	
Q. A. LAST LEVEL CHECKED	DU
LAST LEVEL MOD THIS TYPICAL	DU
LAST LEVEL BY DESIGNER	DU
CHANGED FROM TYPICAL?	Y

REV 10/3/13 1TMLHBINT.4S.DGN

CIRCUIT MODIFICATIONS ARE NOT TO BE MADE WITHOUT AUTHORITY FROM THE OFFICE OF SIGNAL DESIGN

Date: 9/25/13
Des: WIT Chk: MWK
PID: 83019
AFE: 20521

UNION PACIFIC RAILROAD

DWIGHT, ILLINOIS
LIVINGSTON ROAD
JOLIET SUBDIVISION

Office of AVP Engineering - Signal Omaha, Nebraska

Sh.: 11B
DOT 290535W
MP: 71.92
ID: CSL7192.11BS

ADDRESS SELECT JUMPERS LOCATED INSIDE CARDFILE

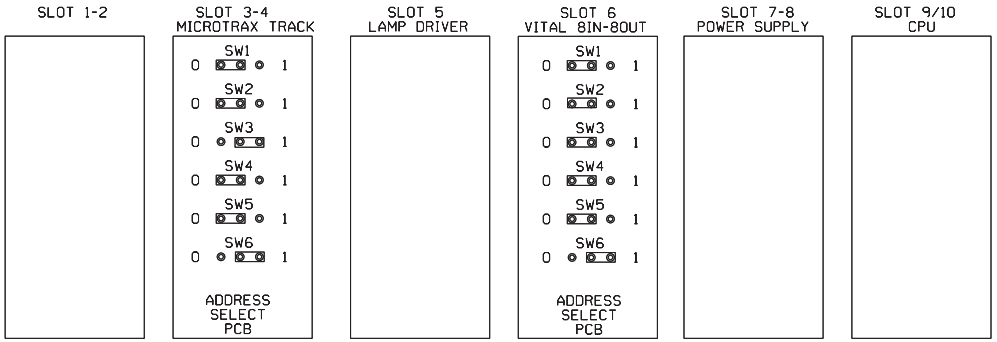

ML8RRH REV B

15 SEC SLOW PICK ET TO PREVENT JOINT HOP	
15 SEC SLOW PICK WT TO PREVENT JOINT HOP	
PROGRAM ID 1 (BINARY 1)	
PROGRAM ID 2 (BINARY 2)	
PROGRAM ID 3 (BINARY 4)	X
PROGRAM ID 4 (BINARY 8)	
PROGRAM ID 5 (BINARY 16)	
PROGRAM ID 6 (BINARY 32)	X
PROGRAM ID 7 (BINARY 64)	
PROGRAM ID 8 (BINARY 128)	
CODE P?	

PLACE AN "X" IN THE BOX FOR DESIRED CONFIGURATION.

NOTE: FOR PTC COMPATIBLE CPU JUMPER SETTINGS REFER TO ANSALDO MANUAL 1D1.0028 PAGE 1-26 1-27 1-28 REV.1 DATE 8/2009

FOR STANDARD CPU JUMPER SETTINGS REFER TO ANSALDO MANUAL SM-6800B PAGE 2-12, 2-13 REV.2.5 DATE 9/2000

NEW SHEET

Designed: 09/25/13
UPGRADE DWIGHT SIDING, M.P. 68.33 TO M.P. 74.97
PID: 83019 WO#: 20521
IS: /MWK
Rec'd: / /WIT /RLL

MODIFICATION LEVEL	
Q. A. LAST LEVEL CHECKED	DU
LAST LEVEL MOD THIS TYPICAL	DU
LAST LEVEL BY DESIGNER	DU
CHANGED FROM TYPICAL?	Y

rev 10/3/13 1TMLHBINT.SS.DGN

CIRCUIT MODIFICATIONS ARE NOT TO BE MADE WITHOUT AUTHORITY FROM THE OFFICE OF SIGNAL DESIGN

Date: 9/25/13
Des: WIT Chk: MWK
PID: 83019
AFE: 20521

UNION PACIFIC RAILROAD

DWIGHT, ILLINOIS
LIVINGSTON ROAD
JOLIET SUBDIVISION

Office of AVP Engineering - Signal Omaha, Nebraska

Sh.: 11C
DOT 290535W
MP: 71.92
ID: CSL7192.11CS

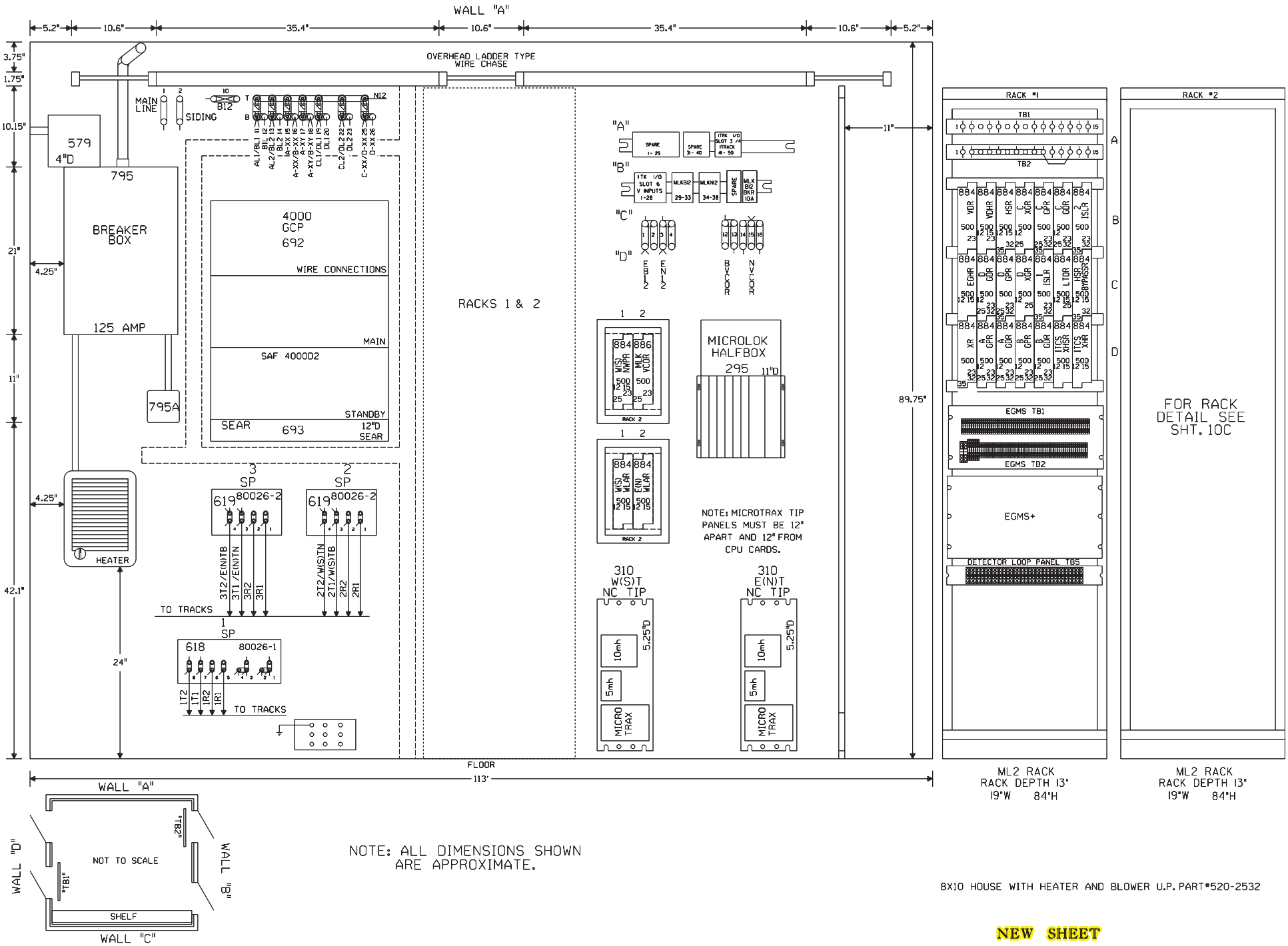

NEW SHEET

Designed: 09/25/13
UPGRADE DWIGHT SIDING, M.P. 68.33 TO M.P. 74.97
PID: 83019 WO#: 20521
IS: /MWK
Rec'd: / /WIT /RLL

CIRCUIT MODIFICATIONS ARE NOT TO BE MADE WITHOUT AUTHORITY FROM THE OFFICE OF SIGNAL DESIGN

Date: 9/25/13
Des: WIT Chk: MWK
PID: 83019
AFE: 20521

UNION PACIFIC RAILROAD

DWIGHT, ILLINOIS
LIVINGSTON ROAD
JOLIET SUBDIVISION

Office of AVP Engineering - Signal Omaha, Nebraska

Sh.: 12
DOT 290535W
MP: 71.92
ID: CSL7192.12X

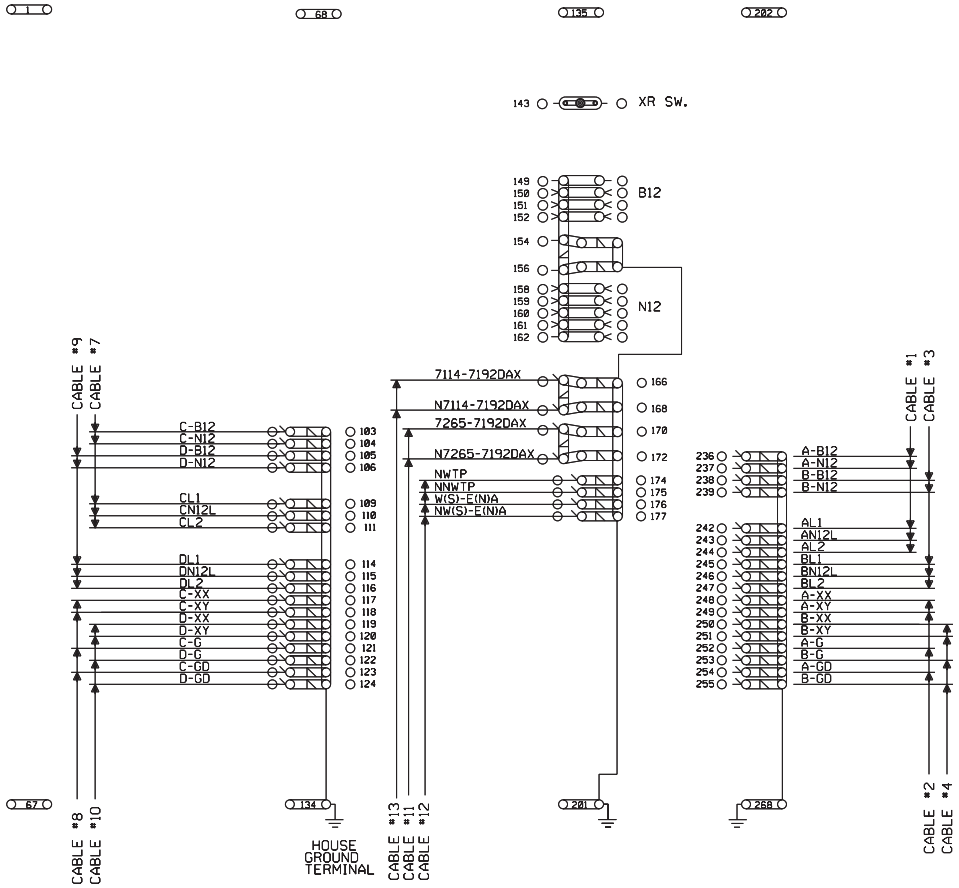

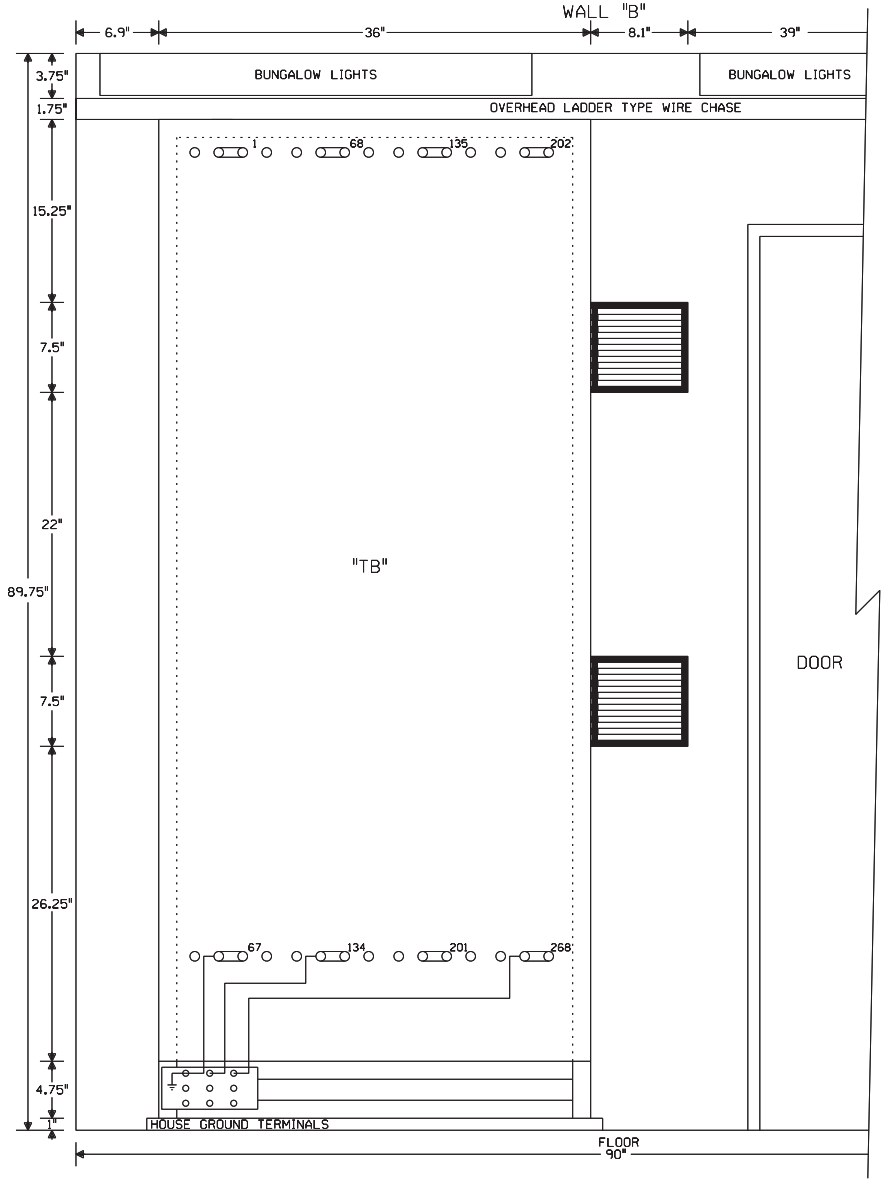

NOTE: ALL DIMENSIONS SHOWN ARE APPROXIMATE.

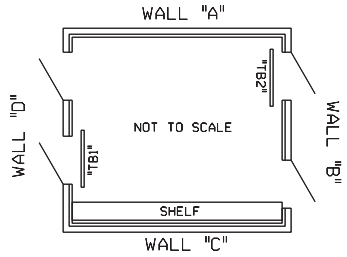

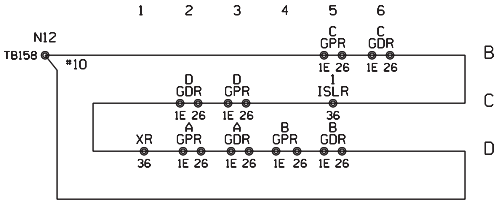

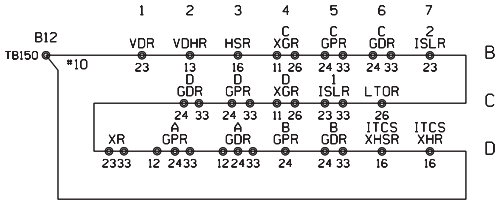

NEW SHEET

Designed: 09/25/13
UPGRADE DWIGHT SIDING, M.P. 68.33 TO M.P. 74.97
PID: 83019 WO#: 20521
IS: / MWK
Rec#: / /WIT /RLL

CIRCUIT MODIFICATIONS ARE NOT TO BE MADE WITHOUT AUTHORITY FROM THE OFFICE OF SIGNAL DESIGN

Date: 9/25/13	
Des: WIT	Chk: MWK
PID: 83019	
AFE: 20521	

UNION PACIFIC RAILROAD

DWIGHT, ILLINOIS
LIVINGSTON ROAD
JOLIET SUBDIVISION

Office of AVP Engineering - Signal Omaha, Nebraska

Sh.:	13
DOT	290535W
MP:	71.92
ID:	CSL7192.13X

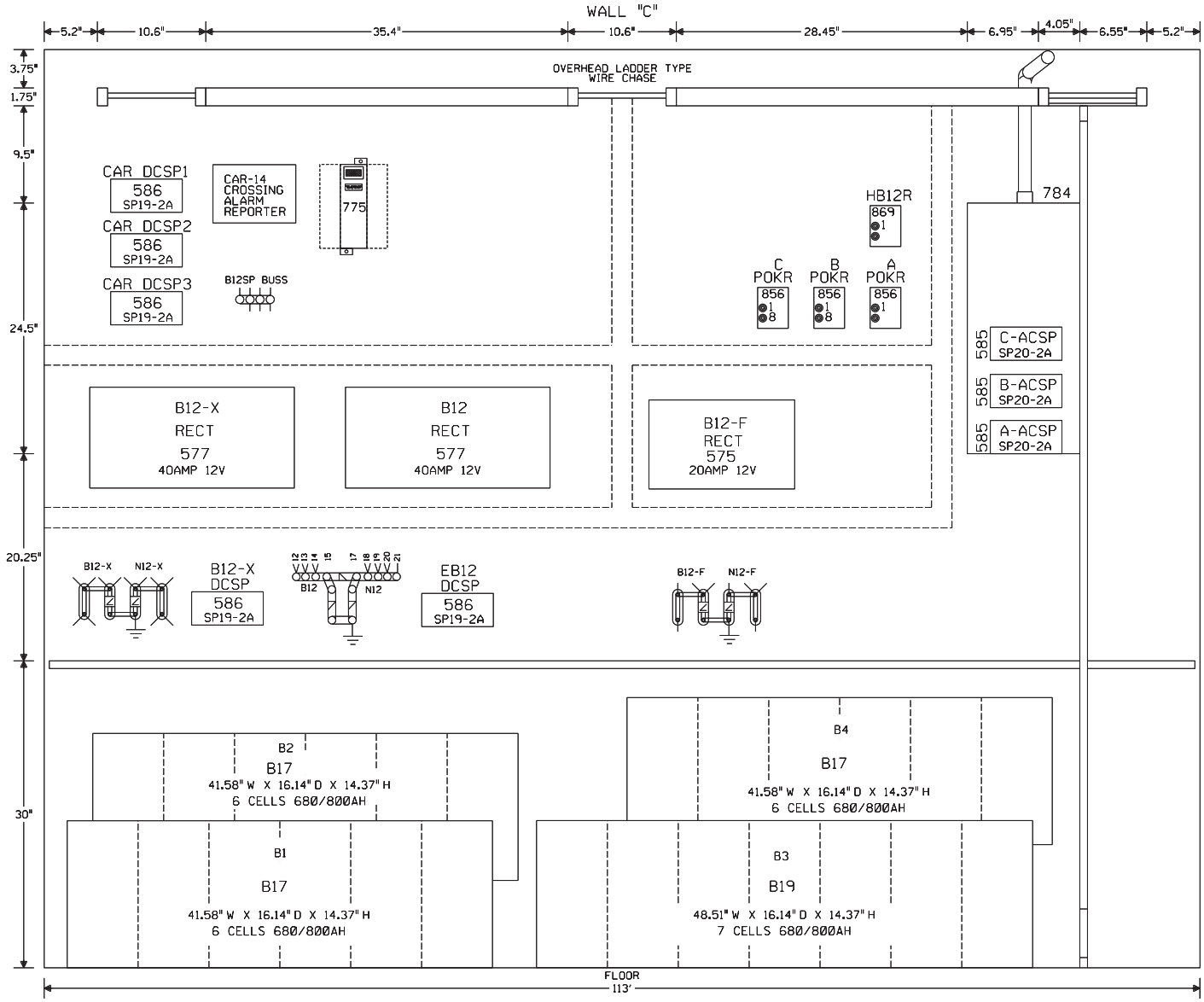

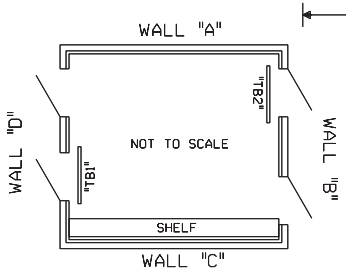

NOTE: ALL DIMENSIONS SHOWN ARE APPROXIMATE.

NEW SHEET

Designed: 09/25/13
UPGRADE DWIGHT SIDING, M.P. 68.33 TO M.P. 74.97
PID: 83019 WO#: 20521
IS: /MWK
Rect: / /WIT /ALL

CIRCUIT MODIFICATIONS ARE NOT TO BE MADE WITHOUT AUTHORITY FROM THE OFFICE OF SIGNAL DESIGN

Date: 9/25/13
Des: WIT Chk: MWK
PID: 83019
AFE: 20521

UNION PACIFIC RAILROAD

DWIGHT, ILLINOIS
LIVINGSTON ROAD
JOLIET SUBDIVISION

Office of AVP Engineering - Signal Omaha, Nebraska

Sh.: 14
DOT 290535W
MP: 71.92
ID: CSL7192.14X

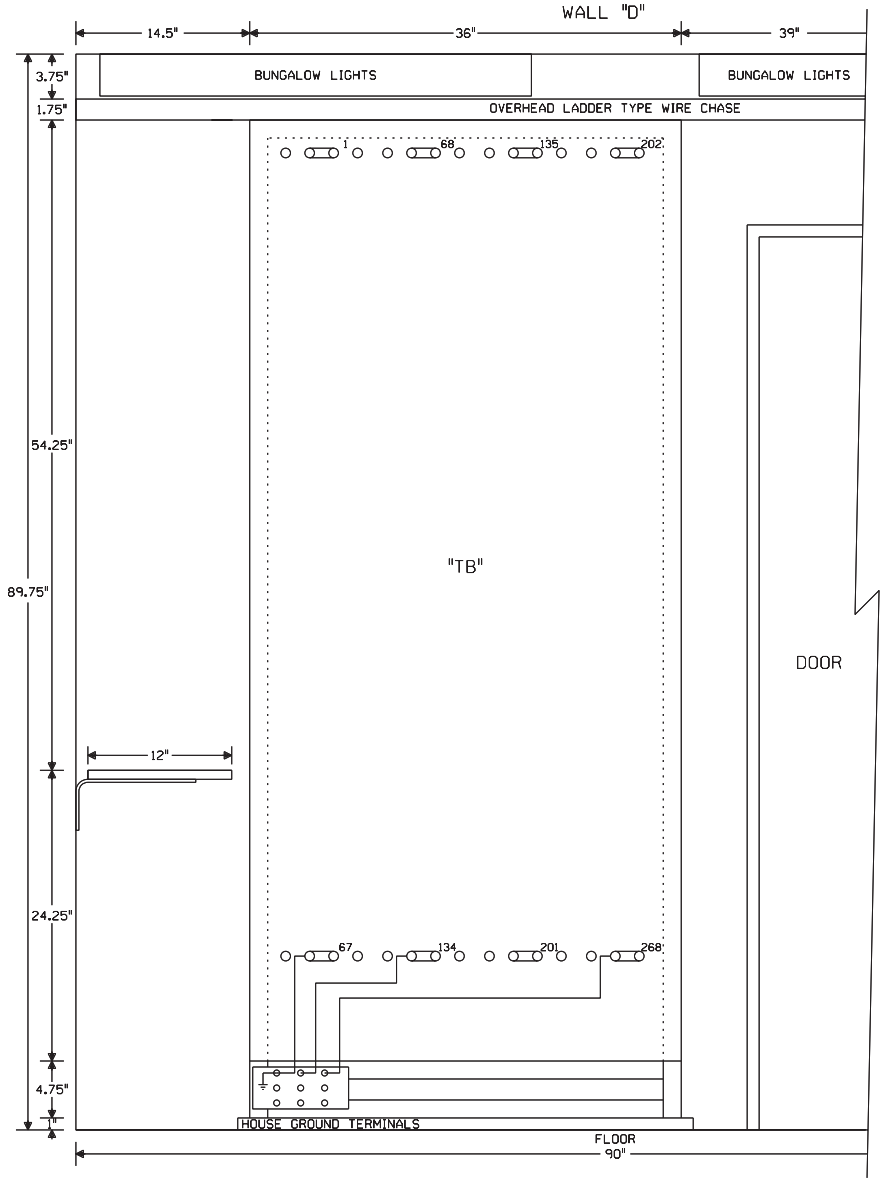

NOTE: ALL DIMENSIONS SHOWN ARE APPROXIMATE.

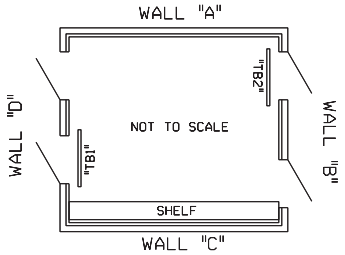

NEW SHEET

Designed: 09/25/13
UPGRADE DWIGHT SIDING, M.P. 68.33 TO M.P. 74.97
PID: 83019 WO#: 20521
IS: /MWK
Rev: / /WIT /RLL

CIRCUIT MODIFICATIONS ARE NOT TO BE MADE WITHOUT AUTHORITY FROM THE OFFICE OF SIGNAL DESIGN

Date: 9/25/13
Des: WIT Chk: MWK
PID: 83019
AFE: 20521

UNION PACIFIC RAILROAD

DWIGHT, ILLINOIS
LIVINGSTON ROAD
JOLIET SUBDIVISION

Office of AVP Engineering - Signal — Omaha, Nebraska

Sh.: 15
DOT 290535W
MP: 71.92
ID: CSL7192.15X

Minimum Program Steps Report

Location and SIN

DOT Number: 290535W
Milepost Number: 71.92
Site Name: Dwight, IL

SIN: 762010010016 *

* Parameter is part of office check number calculation.

MCF and Template Selection

MCF Name: GCP-T6X-02-6.mcf
MCF Revision: 26
MCFCRC: 494D2656

Template = 1C:2 Bi, 2 Uni pairs (OCCN) *

* Parameter is part of office check number calculation.

Minimum Program Steps

TEMPLATE: module configuration
Track 5/RIO 2 Slot = RIO (OCCN) *

TEMPLATE: track 1-Bi, Island
Track 1 : GCP Frequency = 156 Hz (OCCN) *
Track 1 : Approach Distance = 4224 ft (OCCN) *
Track 1 : Prime Warning Time = 39 sec (OCCN) *
Track 1 : Prime UAX = IP (OCCN) *
Track 1 : Prime UAX Pickup = 15 sec (OCCN) *
Track 1 : GCP Transmit Level = Medium (Set in Field,TCN)
Track 1 : Isl Frequency = 13.2 kHz (OCCN) *

TEMPLATE: track 2-Uni, Island
Track 2 : GCP Frequency = 156 Hz (OCCN) *
Track 2 : Approach Distance = 3228 ft (OCCN) *
Track 2 : Prime Warning Time = 39 sec (OCCN) *
Track 2 : GCP Transmit Level = Medium (Set in Field,TCN)
Track 2 : Isl Frequency = 10.0 kHz (OCCN) *
Track 2 : Island Distance = 137 ft (Set in Field,TCN)

TEMPLATE: track 3-Uni,No Island
Track 3 : GCP Frequency = 156 Hz (OCCN) *
Track 3 : Approach Distance = 3228 ft (OCCN) *
Track 3 : Prime Warning Time = 39 sec (OCCN) *
Track 3 : GCP Transmit Level = Medium (Set in Field,TCN)

TEMPLATE: track Anding
AND 2 Used = Yes (OCCN) *

TEMPLATE: AND 1 XR
AND 1 Enable Used = Yes (OCCN) *

TEMPLATE: AND 2
AND 2 Track 2 = Prime (OCCN) *
AND 2 Track 3 = Prime (OCCN) *

TEMPLATE: SSCC
SSCC-2 Number of GPs = 2 (OCCN) *

SSCC-2 Number of GDs = 2 (OCCN) *

TEMPLATE: OOS
OOS Control = OOS IPs (OCCN) *
T3 OOS Control = OOS Input 2 (OCCN) *

TEMPLATE: OP assignment 1
OUT 1.1 = AND 1 XR (OCCN) *
OUT 1.2 = T1 Island (OCCN) *
OUT 2.1 = T2 Island (OCCN) *
OUT 3.1 = T1 Prime (OCCN) *
OUT 3.2 = AND 2 (OCCN) *

TEMPLATE: IP assignment 1
IN 1.1 = AND 1 XR Enable (OCCN) *
IN 1.2 = Out Of Service IP 1 (OCCN) *
IN 2.1 = T1 Prime UAX (OCCN) *
IN 2.2 = Out Of Service IP 2 (OCCN) *
IN 3.1 = T1 Prime UAX (OCCN) *

TEMPLATE: IP assignment 2
IN 5.1 = GP 1.1 (OCCN) *

TEMPLATE: IP assignment SSCC
IN 7.1 = AND 1 XR Enable (OCCN) *
IN 8.2 = GD 2.2 (OCCN) *
IN 8.3 = GP 2.2 (OCCN) *
IN 8.4 = GD 2.1 (OCCN) *
IN 8.5 = GP 2.1 (OCCN) *

TEMPLATE: SEAR
SP 3.1 = General 3 (OCCN) *
SP 4.1 = General 4 (OCCN) *

MS4000 configuration
Track 1 : GCP Frequency = 156 Hz (OCCN,TCN) (Hidden) *
Track 1 : Prime UAX = IP (OCCN) (Hidden) *
Track 1 : Prime UAX Pickup = 15 sec (OCCN) (Hidden) *
Track 1 : Isl Frequency = 13.2 kHz (OCCN) (Hidden) *
Track 1 : Pickup Delay (2s +) = 2 sec (OCCN) (Hidden) *
IN 1.1 = AND 1 XR Enable (OCCN) (Hidden) *
IN 1.2 = Out Of Service IP 1 (OCCN) (Hidden) *

MS4000 Predictor
Track 1 : Prime Warning Time = 39 sec (OCCN) (Hidden) *

GCP: track 1
Track 1 : Island Distance = 137 ft (Set in Field,TCN)

ISLAND: track 1
Track 1 : Pickup Delay (2s +) = 2 sec (OCCN) *

ISLAND: track 2
Track 2 : Pickup Delay (2s +) = 2 sec (OCCN) *

ADVANCED: site options
Daylight Savings = Off (Set in Field)

SEAR: slot 1-4 inputs
IN 4.1 = Vehicle Det Hlth (OCCN) *
IN 4.2 = 3 Vehicle Detect (OCCN) *

SEAR: inputs slot 5

IN 5.2 = General 1 (OCCN) *
IN 5.3 = General 2 (OCCN) *

Express: MS4000 configuration
Track 1 : GCP Frequency = 156 Hz (OCCN,TCN) (Hidden) *
Track 1 : Prime UAX = IP (OCCN) (Hidden) *
Track 1 : Prime UAX Pickup = 15 sec (OCCN) (Hidden) *
Track 1 : Pickup Delay (2s +) = 2 sec (OCCN) (Hidden) *
IN 1.1 = AND 1 XR Enable (OCCN) (Hidden) *
IN 1.2 = Out Of Service IP 1 (OCCN) (Hidden) *

Express: MS4000 Predictor
Track 1 : Prime Warning Time = 39 sec (OCCN) (Hidden) *

* Parameter is part of office check number calculation.

Check Numbers

Office Check Number: 2195BF34
Config. Check Number: 0BE87CA5
(Based on MCF Revision 26)

Parameters not part of office check number calculation:

Track 1 : GCP Transmit Level = Medium (Set in Field)
Track 2 : GCP Transmit Level = Medium (Set in Field)
Track 2 : Island Distance = 137 ft (Set in Field)
Track 3 : GCP Transmit Level = Medium (Set in Field)
Track 1 : Island Distance = 137 ft (Set in Field)
Daylight Savings = Off (Set in Field)

Comments

<none>

Configuration Package File

Filename: CSL7192_290535W.pac
Path: C:\PAC File\
Date/Time: 11/11/2014 16:47:09
DT Version: 5.3.3