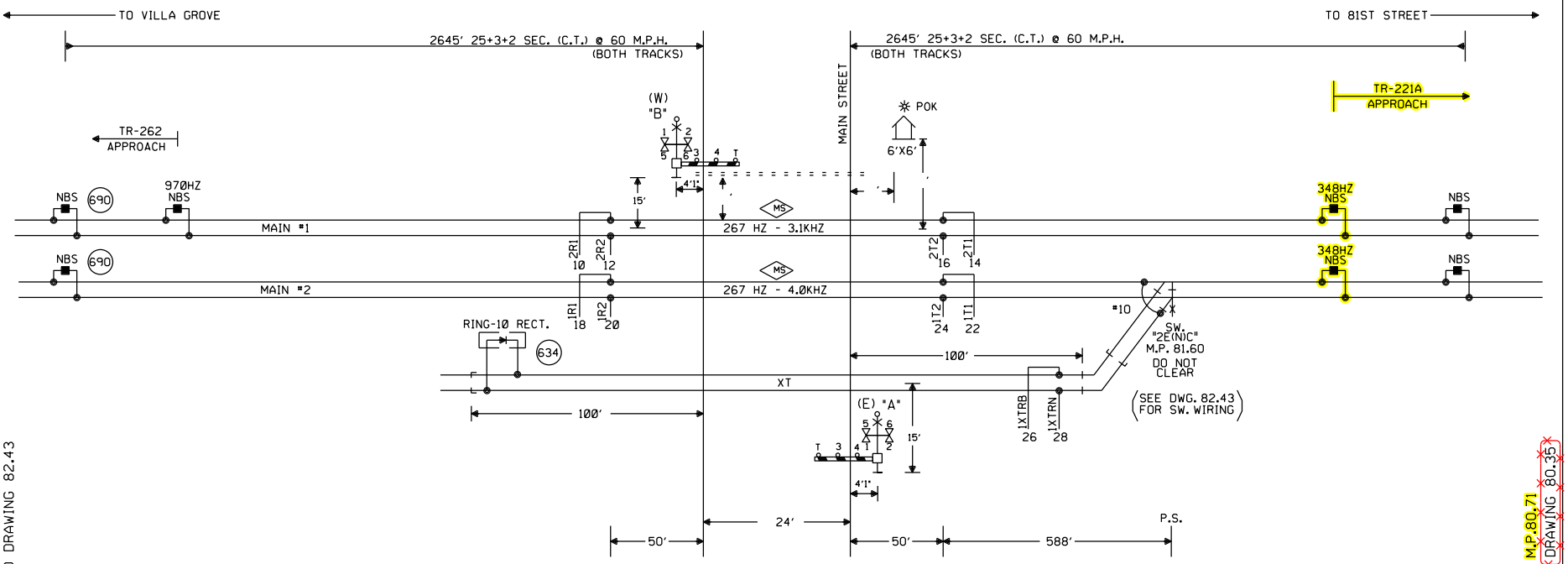

NOTES:

1. CONNECT TO HEAVY DUTY CONTACTS & SHOW CONTACT NUMBERS.
2. CONNECT TO REGULAR DUTY CONTACTS & SHOW CONTACT NUMBERS.
3. SHOW HEAVY DUTY CONTACTS & RELAY RES.
4. WIRE #16 AWG-1 CONDUCTOR STRANDED S.D. COPPER 19 STRANDS, INSULATED WITH 2/64" ETHYLENE PROPYLENE, 1/64" NEOPRENE JACKET, 10/64" O.D. RATED 300 V. 18A. CASE WIRE.
5. WIRE #12 AWG-1 CONDUCTOR STRANDED S.D. COPPER 19 STRANDS, INSULATED WITH 3/64" ETHYLENE PROPYLENE, 1/64" NEOPRENE JACKET, 14/64" O.D. RATED 600 V. 26A. CASE WIRE.
6. SAME WIRE AS 5 BUT TW. IN PAIRS.
7. ALL WIRES CONNECTED TO BATT. TO BE TW. #10 AWG-1 CONDUCTOR SOLID, S.D. COPPER ANNEALED, INSULATED WITH 2/64" CROSS LINK POLYETHYLENE, TYPE RHH OR RHW U.S.E. 13/64" O.D. RATED 75 DEG.C. WET, 90 DEG.C. DRY, RATED 600V. 42A. BATTERY WIRE.
8. WIRE #10 AWG-1 CONDUCTOR STRANDED S.D. COPPER 19 STRANDS, INSULATED WITH 3/64" ETHYLENE PROPYLENE, 1/64" NEOPRENE JACKET, 1/4" O.D. RATED 600V. 25A. CASE WIRE.
9. SAME WIRE AS 8 BUT TW. IN PAIRS.

⊗ = TWISTED WIRES

= RUN NEG. LEAD FROM RECT. DIRECTLY TO NEG. TERM. OF BATT. RUN POS. LEAD FROM HEEL OF "CHARGE" TEST SW. DIRECTLY TO POS. TERM. OF BATT

⊘ = OBSERVE CORRECT POLARITY. EQUIPMENT WILL BE DAMAGED IF CONNECTIONS ARE REVERSED

ALL TRACK WIRES #6 TW. UNLESS OTHERWISE SPECIFIED

(1) = HOUSE TO BE 25' FROM NEAR RAIL OF TRACK AND 30' FROM EDGE OF ROADWAY.

☼ = POWER OFF INDICATION

2/#6 TO BE USED ON ALL TRACK CONNECTIONS. THE SUM TOTAL OF THE MD. REC. & XMTR. TRACK WIRE LENGTH SHOULD NOT EXCEED 500'.

TOP OF FOUNDATION TO BE AT SAME ELEVATION AS THE SURFACE OF THE TRAVELED WAY & NO MORE THAN 4" ABOVE THE SURFACE OF THE GROUND, WITH CURB TO BE MAXIMUM OF 4" ABOVE CURB.

ALL LIGHTS TO BE 12" ROUNDELS.

= = = : 4" X ' PIPE

LIGHTS: ALL LED'S

GATE ARMS: W: 18'
E: 16'

GROUNDING LAYOUT

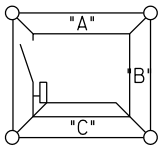

S ← → N

= IN
= OUT

WOODLAND, IL.
MAIN STREET
M.P. 81.8
VILLA GROVE SUBDIVISION
D.O.T.#167 580G

Designed: 07/15/14 INSTALL GATES, FLASHERS AND CWT AT TR-221A, M.P. 80.71 Rec#: 25083 WO#: IS: /MRN / /NST/JTB	Revised: 9-2-10 UPDATED TRACK WIRES TO MOSAI, ADDED 5A FUSES TO GATES PER FIELD AC Rec#: 16984 WO#: N/A IS: 7-13-10 / AFD/WIT/ /	Revised: 04-12-10 INSTALLED EC5 BETWEEN WATSEKA & WOODLAND JCT. M.P. 77.45 TO M.P. 82.40. Rec#: 16757 WO#: 56908 IS: 02-13-10 /JJL TLB/WIT/CTC/MDF	Revised: 03-22-10 INSTALLED EC5 BETWEEN WOODLAND JCT. & GOODWINE M.P. 82.43 TO M.P. 95.00 PHASE I. Rec#: 16659 WO#: 56906 IS: 02-12-10 /MWK TLB/WIT/CTC/RCB	REV. 8-7-06 INSTALLED 20A SSCC AND MS-2000 PER FIELD A.C. REC#14033 6-30-06 RD/WITT	REV. 10-4-02 REVISED TRACK PLAN TO SHOW ALL LOCATIONS WITHIN APPROACH REC.# 10290 CRD/WITT	REV. 2-22-02 INSTALL PMD-2, REDRAW ON CAD PER FIELD AC 11-20-01 RD/CRD/CDL	CIRCUIT MODIFICATIONS ARE NOT TO BE MADE WITHOUT AUTHORITY FROM THE OFFICE OF SIGNAL DESIGN	DES: DIG: CHK: A.F.E. ID: 030008180.1X

UNION PACIFIC RAILROAD
81st. ST., CHICAGO, ILLINOIS
TO VILLA GROVE, ILLINOIS
C.T.C.. CIRCUITS
Office of Sr.AVP Engineering - Signal/TCO OMAHA NEBR.

DATE 11-20-01
SHEET 1
DWG 81.8
S-300

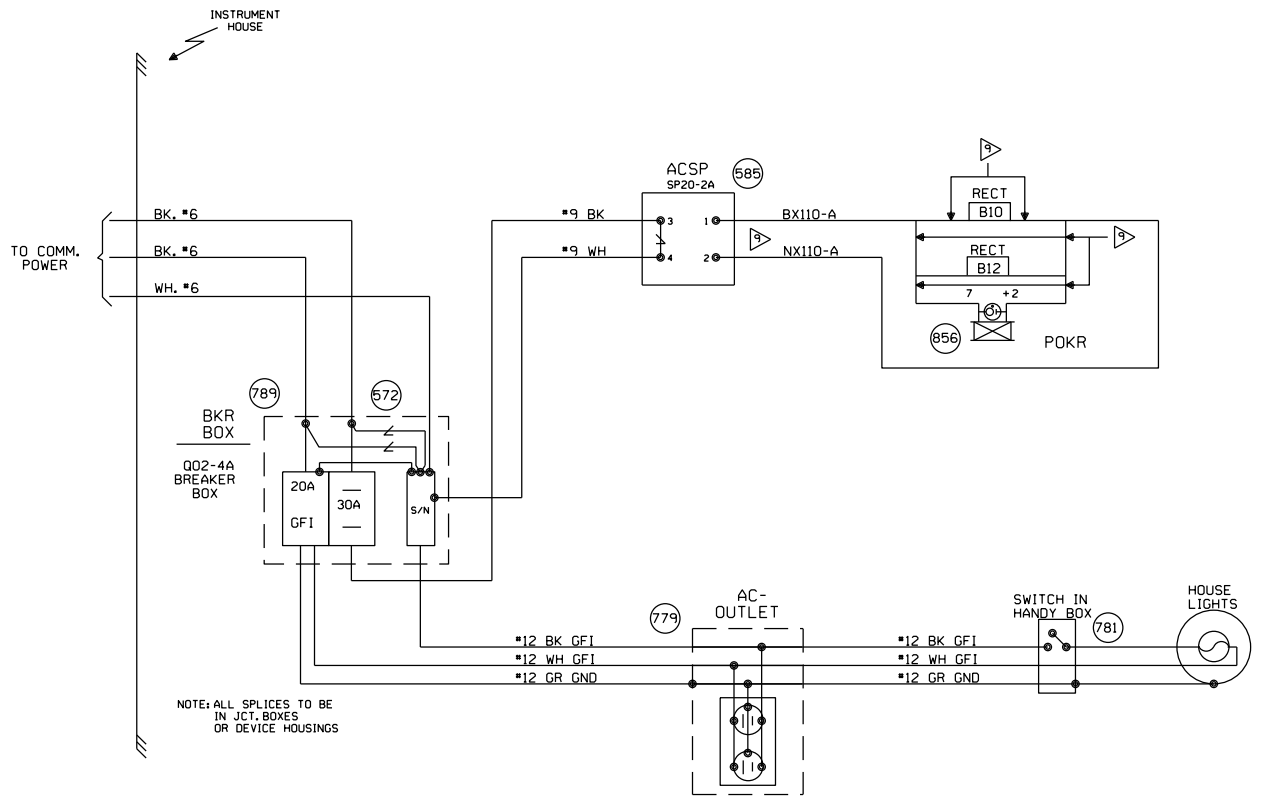

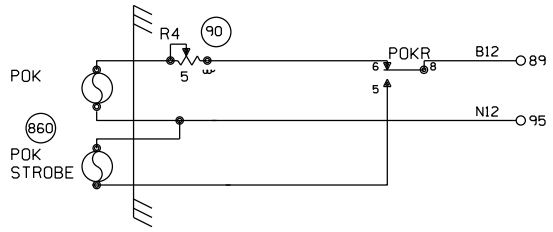

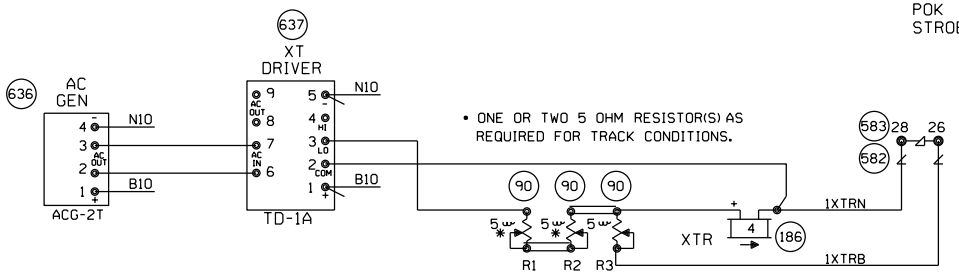

WOODLAND, IL.
MAIN STREET
M.P. 81.8
VILLA GROVE SUBDIVISION
D.O.T.#167 580G

					Revised: 04-12-10 INSTALLED EC5 BETWEEN WATSEKA & WOODLAND JCT. M.P. 77.45 TO M.P. 82.40. Rec#: 16757 WO#: 56908 IS: 02-13-10 /JJL TLB/WIT/CTC/MDF	REV. 8-7-06 INSTALLED 20A SSGC AND MS-2000 PER FIELD A.C. REC#14033 6-30-06 RD/WITT	REV. 2-22-02 INSTALL PMD-2, REDRAW ON CAD PER FIELD AC 11-20-01 RD/CRD/CDL	CIRCUIT MODIFICATIONS ARE NOT TO BE MADE WITHOUT AUTHORITY FROM THE OFFICE OF SIGNAL DESIGN	DES: DIG: CHK: A.F.E. ID: 030008180.2X	UNION PACIFIC RAILROAD 81st. ST., CHICAGO, ILLINOIS TO VILLA GROVE, ILLINOIS C.T.C. CIRCUITS Office of Sr.AVP Engineering - Signal/TCO OMAHA NEBR.	DATE 11-20-01 SHEET 2 DWG 81.8 S-300-M

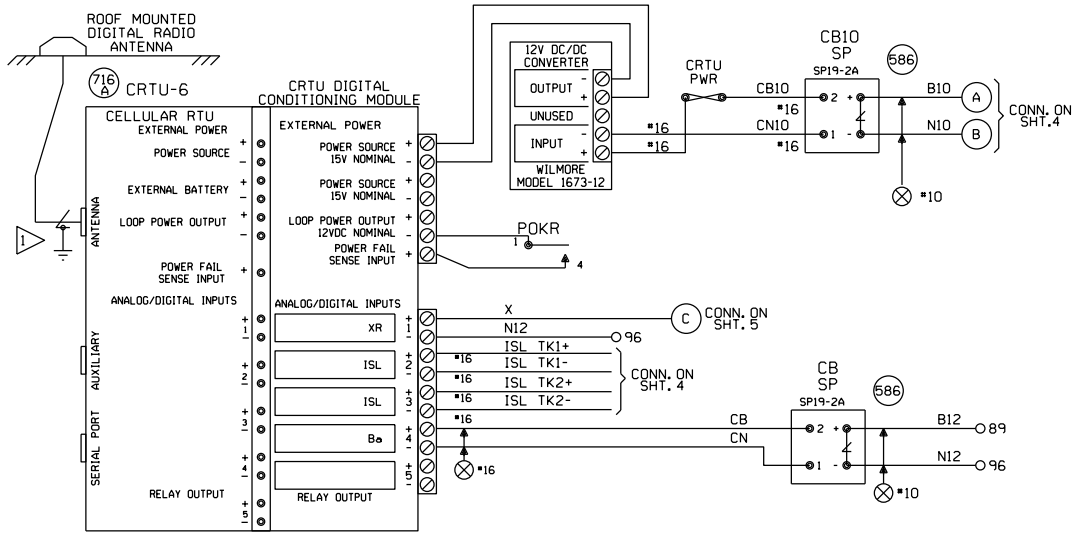

1 ANTENNA SURGE PROTECTOR - POLYPHASER CORP. W/ #10 AWG GROUNDING WIRE - 18 " MAX. LENGTH.

NOTES:

ALL DIODES 1N5060 OR 1N4004 UNLESS OTHERWISE NOTED.

✳ MOUNT ANTENNA ON TOP OF HOUSE.

ALL WIRES #18 UNLESS OTHERWISE NOTED.

ALL UNUSED 'NC' INPUTS MUST BE TIED HIGH TO BATTERY

ALL UNUSED ANALOG INPUTS MUST BE TIED HIGH TO BATTERY

ALL UNUSED 'NO' INPUTS MUST BE DISCONNECTED

ANALOG AND AC INPUT MODULES MUST BE MOUNTED LESS THAN 12" FROM CRTU

CRTU FRONT PANEL DISPLAY CHART INDICATES NORMAL STATE

■ DIGITAL INPUT HIGH, OR POWER FAIL INPUT CLOSED

□ DIGITAL INPUT LOW, OR POWER FAIL INPUT OPEN

NORMAL STATE FOR ANALOG CHANNELS IS EQUAL TO THE STORED NOMINAL VOLTAGE +120% OR -81%

■ L — LATCH IS SET BECAUSE CRTU DETECTED AN ALARM CONDITION

12.06V L

'sRUN MODE' 'sRUN MODE-SILENT'

CRTU RADIO IS DISABLED. REPROGRAM CRTU WITH LAPTOP.

UNIT INSTALLATION AND SETUP

R.R. SITE ID WHERE: SSSS = 4 CHARACTER SUBDIVISION ID. FILL WITH PRECEDING ZEROS AS REQUIRED. THE MAIN TRACK SUBDIVISION ID* IS IN THE CURRENT TIMETABLE. INDUSTRIAL LEADS, LEASED, AND LEAD TRACKS LISTED WITHIN THE SUBDIVISION MAY HAVE THEIR OWN UNIQUE SUBDIVISION ID*. ALWAYS REFER TO CURRENT PRINTED COPY OF THE TIMETABLE.
LLLLLLLL = 8 CHARACTERS USE DOT* AT CROSSINGS, AND
WDLLLLLL = USE 'WD' THEN MP* AT WAYSIDE LOCATIONS.
EXAMPLE = 0785WD1801.5UT
HBLLLLLL = USE 'HB' THEN MP* AT HBD SITES.
EXAMPLE = 0100-HB55.62TX
THE MP* MUST USE A DECIMAL POINT TO SEPARATE NUMBERS. FILL WITH PRECEDING DASHES AS REQUIRED.
AA = 2 CHARACTER STATE NAME FOR ALL LOCATIONS. MUST BE 14 CHARACTERS LONG, NO SPACES ALLOWED.

SITE IDENTIFIER: SSSSLLLLLLLLAA	0040-167580GIL
OPERATION TO RESUME:	RUN
SIGNAL STRENGTH dBm	-83DBM
CARRIER ID	0040
FIRMWARE VERSION	2.3.12
BOOT VERSION:	05
CMM VERSION:	03-65
SERIAL NUMBER	03-06119-4002
MIN ASSIGNMENT	0041041348
ESN: (MICROBURST ONLY)	
CONFIGURATION NET	CELLEMETRY
SILENCE INTERVAL	60 MINUTES
HEALTHCHECK INTERVAL	EVERY 2 DAYS
ALARM DEFER DELAY	240 MINUTES (4 HOURS)
SIGNAL STATUS	GOOD
SCADANET STATUS	GOOD
CALIBRATION CONSTANT CH1	
CALIBRATION CONSTANT CH2	
CALIBRATION CONSTANT CH3	
CALIBRATION CONSTANT CH4	13.36VDC
CALIBRATION CONSTANT PS	13.05VDC

FIELD PROVIDES: SAMPLED NOMINAL VOLTAGES, SCADANET STATUS CALIBRATION CONSTANTS, SERIAL NUMBER, AND SIGNAL STATUS.

CHANNEL SETUP - STANDARD CONFIGURATION D11:XR,ISL,ISL,Ba

CHANNEL NORMAL STATE	SENSE (NO/NC)	NAME FUNCTION	RECOGNITION DELAY SECONDS ACTIVE	RECOGNITION DELAY SECONDS NORMAL	RETURN TO NORMAL	REPORTING MODE	ALARM LINKED CHANNEL	ALARM LINKED CRITERIA	EVENT LOGGING ENABLED OPTIONS
POWER FAIL (CH5) ■	POWER FAIL DETECT NO	PFin-PK AC POWER FAIL	7,200 ALARM	300 NORMAL	ENABLED	ALERT	DISABLED	N/A	
CH1 □ ■	DIGITAL INPUT NO	CH1-XR XR DOWN TO LONG	1,800 ALARM	1 NORMAL	ENABLED	ALERT	DISABLED	N/A	
CH2 ■ □	DIGITAL INPUT NC	CH2-ISL ISLONLY ISLAND OCCUPIED DAX, PREEMPT WARNING TIME	1 ACTIVE	1 NORMAL	DISABLED	STATUS ONLY	DISABLED	N/A	
CH3 ■ □	DIGITAL INPUT NC	CH3-ISL ISLAND OCCUPIED DAX, PREEMPT WARNING TIME	1 ACTIVE	1 NORMAL	DISABLED	STATUS ONLY	DISABLED	N/A	DIGITAL EVENTS
CH4 STORED NOMINAL VOLTAGE	ANALOG INPUT N/A	CH4-Ba/V BATTERY MONITOR BATTERY LOW	600 ALARM	1200 NORMAL	ENABLED	ALERT W/UPDATE	DISABLED	N/A	CH1-XR CH2-ISL CH3-ISL
POWER SOURCE (CH6)	ANALOG INPUT N/A	PS-Ba/V BATTERY MONITOR BATTERY LOW	600 ALARM	1200 NORMAL	ENABLED	ALERT W/UPDATE	DISABLED	N/A	

ANALOG CHANNEL	USEFUL RANGE VOLTS LOW	USEFUL RANGE VOLTS HIGH	DISPLAYED RANGE VOLTS LOW	DISPLAYED RANGE VOLTS HIGH	RELATIVE ALARM POINT LOW	RELATIVE ALARM POINT HIGH	ABSOLUTE ALARM POINT LOW	ABSOLUTE ALARM POINT HIGH	AUTOMATIC UPDATE INTERVAL	STORED NOMINAL VOLTAGE	SAMPLED NOMINAL VOLTAGE
CH4	0.0	30.00	0.0	30.00	81%	120%	10.0	29.0	14 DAYS	12.69	
POWER SOURCE	0.0	30.00	0.0	30.00	81%	120%	10.0	29.0	14 DAYS	12.69	
RELAY OUTPUT	NAME RLY-OUT		ACTIVE SET-UP-OPEN		NORMAL CLR-DN-CLOSE		PULSE DURATION		15 SECONDS	StdCfg Ver: 2.3.3 REV'D 9-20-02	

MAINTENANCE OPERATIONS

TO START OR ABORT ANY PROCEDURE

1. PRESS THE 'CANCEL' BUTTON FIRST

WHEN RESPONDING TO A CALL, PUT THE CRTU IN THE 'SILENCE ALARMS' MODE

1. PRESS 'SELECT' AND THEN '+ ARROW' BUTTON UNTIL
   DISPLAY: ACTION?
   SILENCE ALARMS
2. PRESS THE 'SELECT' BUTTON TWICE
3. CORRECT PROBLEM AND SIMULATE NORMAL TRAIN MOVEMENT THROUGH THE LOCATION
4. EXAMINE EACH CHANNEL ON THE CRTU
5. PRESS THE '+/- ARROW' BUTTON. VERIFY ALL CHANNELS INDICATE A NORMAL STATE

NORMAL STATES ARE ON THE CHANNEL SETUP CHART

CLEAR TIMERS, LATCHES AND SEND ALL NORMAL

1. DO STEPS #1 - #5 ABOVE, AND PRESS 'CANCEL'.
2. PRESS 'SELECT' AND THEN '- ARROW' BUTTON UNTIL
   DISPLAY: ACTION?
   SERVICE MODE
3. PRESS 'SELECT' AGAIN TO RESET TIMERS, AND IF
   DISPLAY: SERVICE MODE
   ALL NORMAL
4. PRESS 'SELECT' AGAIN TO CLEAR LATCHES, AND SEND ALL NORMAL. SKIP STEPS #5-#6.
5. HOWEVER, IF ALARMS ARE NOT CLEARED;
   DISPLAY: SERVICE MODE
   ALARMS PENDING/PRESENT
6. PRESS 'CANCEL', CORRECT PROBLEM AND REPEAT STEPS #2 THRU #5 UNTIL ALL NORMAL SENT.

TO CANCEL THE 'SILENCE ALARMS' MODE

1. PRESS 'SELECT' AND THEN '+ ARROW' BUTTON UNTIL
   DISPLAY: ACTION?
   CANCEL SILENCE
2. PRESS THE 'SELECT' BUTTON AGAIN

EXAMINE & SET BATTERY VOLTAGE NOMINAL VALUE

1. PRESS THE '+ ARROW' OR '- ARROW' BUTTON UNTIL THE DESIRED CHANNEL IS DISPLAYED.
   DISPLAY: PS-Ba
   13.83V NORMAL
2. VERIFY THE DISPLAYED READING WITH A DIGITAL VOLTMETER
3. PRESS THE 'SELECT' BUTTON, AND THE CRTU DISPLAY WILL SWITCH BETWEEN CURRENT/SAVED NOMINAL VOLTAGE VALUES.
   DISPLAY: NOMINAL ON #6? (CURRENT)
   13.83
   DISPLAY: SAVED NOMINAL 6 (STORED)
   12.69
4. PRESS THE 'SELECT' BUTTON AND THE CURRENT OR 'NOMINAL ON' VALUE WILL BE SAMPLED AND STORED AS THE 'SAVED NOMINAL' VALUE
5. VERIFY THE 'NOMINAL ON' AND 'SAVED NOMINAL' VALUES ARE EQUIVALENT, REPEAT STEPS #1 THRU #3 & PRESS THE 'CANCEL' BUTTON.

WOODLAND, IL.
MAIN STREET
M.P. 81.8
VILLA GROVE SUBDIVISION
D.O.T.#167 580G

				Revised: 04-12-10 INSTALLED EC5 BETWEEN WATSEKA & WOODLAND JCT. M.P. 77.45 TO M.P. 82.40. Rec#: 16757 WO#: 56908 IS: 02-13-10 JJL TLB/WIT/CTC/MDF	REV. 8-7-06 INSTALLED CRTU REC#14033 6-30-06 RD/WITT/WITT/EML	MODIFICATION LEVEL: Q.A. LAST LEVEL CHK'D. / LAST LEVEL MOD. THIS TYP. / LAST LEVEL BY DESIGNER. / CHANGED FROM TYP.? Y/N	CIRCUIT MODIFICATIONS ARE NOT TO BE MADE WITHOUT AUTHORITY FROM THE OFFICE OF SIGNAL DESIGN	DES: WITT / DIG: WITT / CHK: EML / A.F.E. 3327 / ID: 030008180.3X	UNION PACIFIC RAILROAD 81st. ST., CHICAGO, ILLINOIS TO VILLA GROVE, ILLINOIS C.T.C.. CIRCUITS Office of Sr.AVP Engineering - Signal/TCO OMAHA NEBR.	DATE 10-31-02 / SHEET 3 / DWG 81.8 / S-300

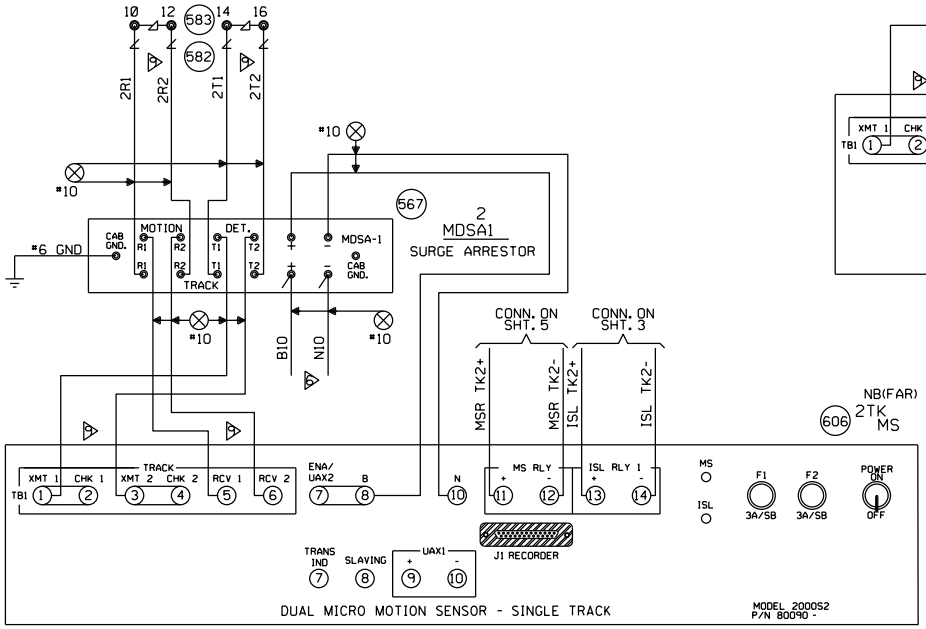

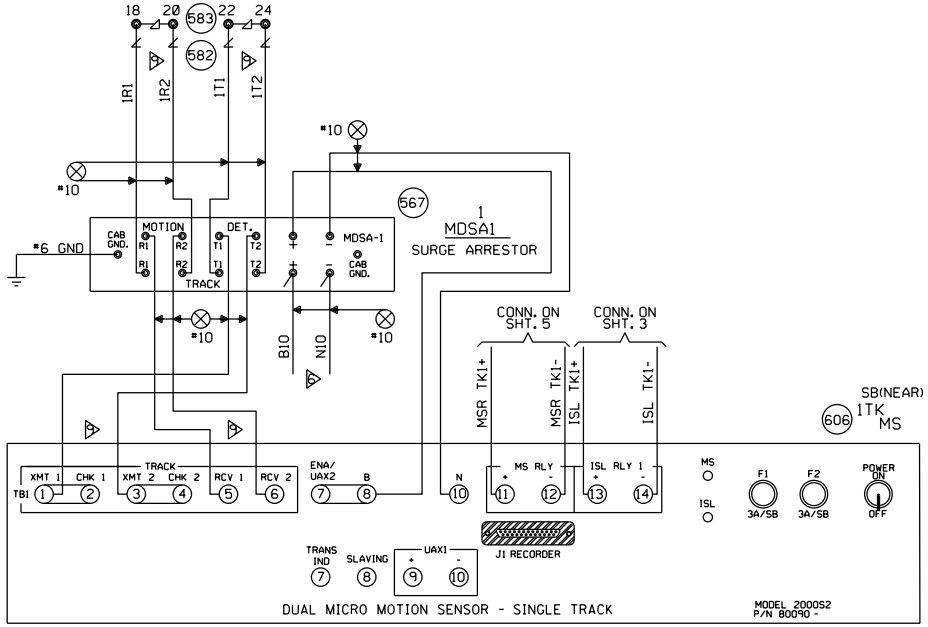

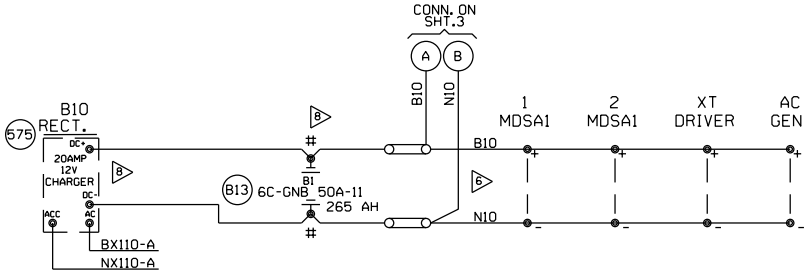

NOTE:

EACH TRANSMITTER TO RAIL WIRE FROM TB1-1 AND TB1-2 MUST NOT EXCEED THE MAXIMUM LENGTH SPECIFIED IN THE TABLE SHOWN BELOW. THE RECEIVER WIRE LENGTH IS NOT CRITICAL. DOES NOT APPLY TO 6 TRACK WIRE APPLICATION.

"Mf" FREQUENCY (HZ)	MAXIMUM TRANSMIT WIRE LENGTH (FEET)
86	100
114	125
156	150
211	200
285-970	250

WOODLAND, IL.
MAIN STREET
M.P. 81.8
VILLA GROVE SUBDIVISION
D.O.T.#167 580G

			Revised: 9-2-10 UPDATED TRACK WIRES TO MDSA1, ADDED 5A FUSES TO GATES PER FIELD AC Rec#: 16984 WO#: N/A IS: 7-13-10 / / AFD/WIT/ / /	Revised: 04-12-10 INSTALLED EC5 BETWEEN WATSEKA & WOODLAND JCT. M.P. 77.45 TO M.P. 82.40. Rec#: 16757 WO#: 56908 IS: 02-13-10 /JJL TLB/WIT/CTC/MDF	REV. 8-7-06 INSTALLED 20A SSCC AND MS-2000 PER FIELD A.C. REC#14033 6-30-06 RD/WITT	REV. 8-7-06 INSTALLED CRTU W.O.#3327 REC#14033 6-30-06 RD/WITT/WITT/EML	REV. 2-22-02 INSTALL PMD-2, REDRAW ON CAD PER FIELD AC 11-20-01 RD/CRD/CDL	CIRCUIT MODIFICATIONS ARE NOT TO BE MADE WITHOUT AUTHORITY FROM THE OFFICE OF SIGNAL DESIGN	DES: DIG: CHK: A.F.E. ID= 030008180.4X	UNION PACIFIC RAILROAD 81st. ST., CHICAGO, IL. TO VILLA GROVE, IL. C.T.C. CIRCUITS Office of Sr.AVP Engineering - Signal/TCO OMAHA NEBR.	DATE 11-20-01 SHEET 4 DWG 81.8 S-300-M

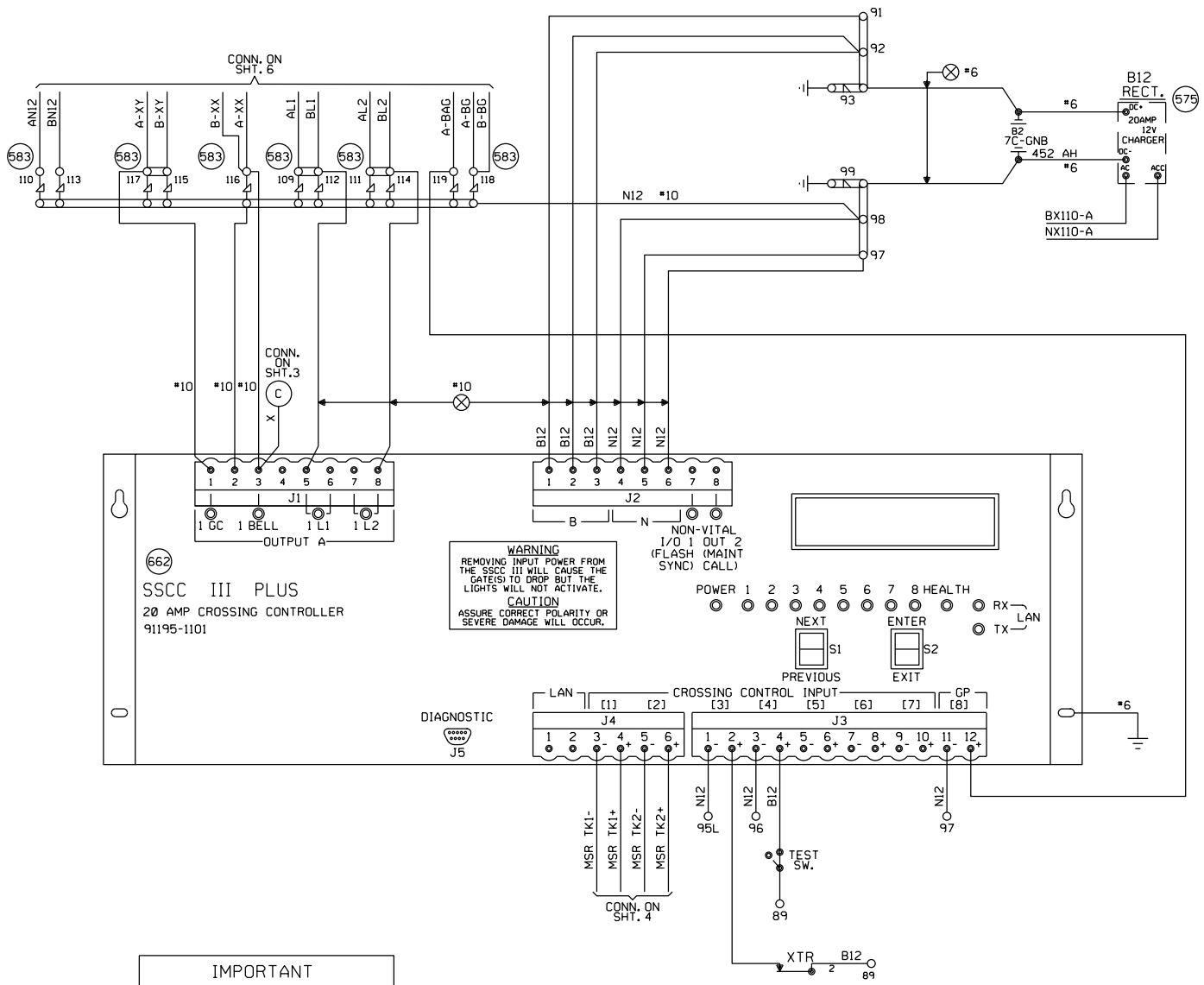

IMPORTANT
THE PROGRAM MCF AND ID LISTED BELOW MUST BE ENTERED IN THE PROGRAM SETUP ROUTINE FOR THIS SOLID STATE CROSSING CONTROLLER TO FUNCTION PROPERLY.
PROGRAM MCF: 2TRKDSTK PROGRAM ID: 320

WOODLAND, IL.
MAIN STREET
M.P. 81.8
VILLA GROVE SUBDIVISION
D.O.T.#167 580G

REV. 8-7-06
INSTALLED 20A SSCC AND MS-2000 PER FIELD A.C.

REC#14033
6-30-06
RD/WITT

MODIFICATION LEVEL	
D. A. LAST LEVEL CHECKED	DN
LAST LEVEL MOD THIS TYPICAL	DN
LAST LEVEL BY DESIGNER	
CHANGED FROM TYPICAL?	

REV 04.01.06 4K ACDCSSCC.6

CIRCUIT MODIFICATIONS ARE NOT TO BE MADE WITHOUT AUTHORITY FROM THE OFFICE OF SIGNAL DESIGN

DES:
DIG: WITT
CHK:
A.F.E.
ID: 030008180.5X

UNION PACIFIC RAILROAD
81st STREET, ILLINIOS TO
VILLA GROVE, ILLINIOS
C.T.C. CIRCUITS
Office of Sr.AVP Engineering - Signal/TCO OMAHA NEBR.

DATE 8-7-06
SHEET 5
DWG 81.8
S-300-M

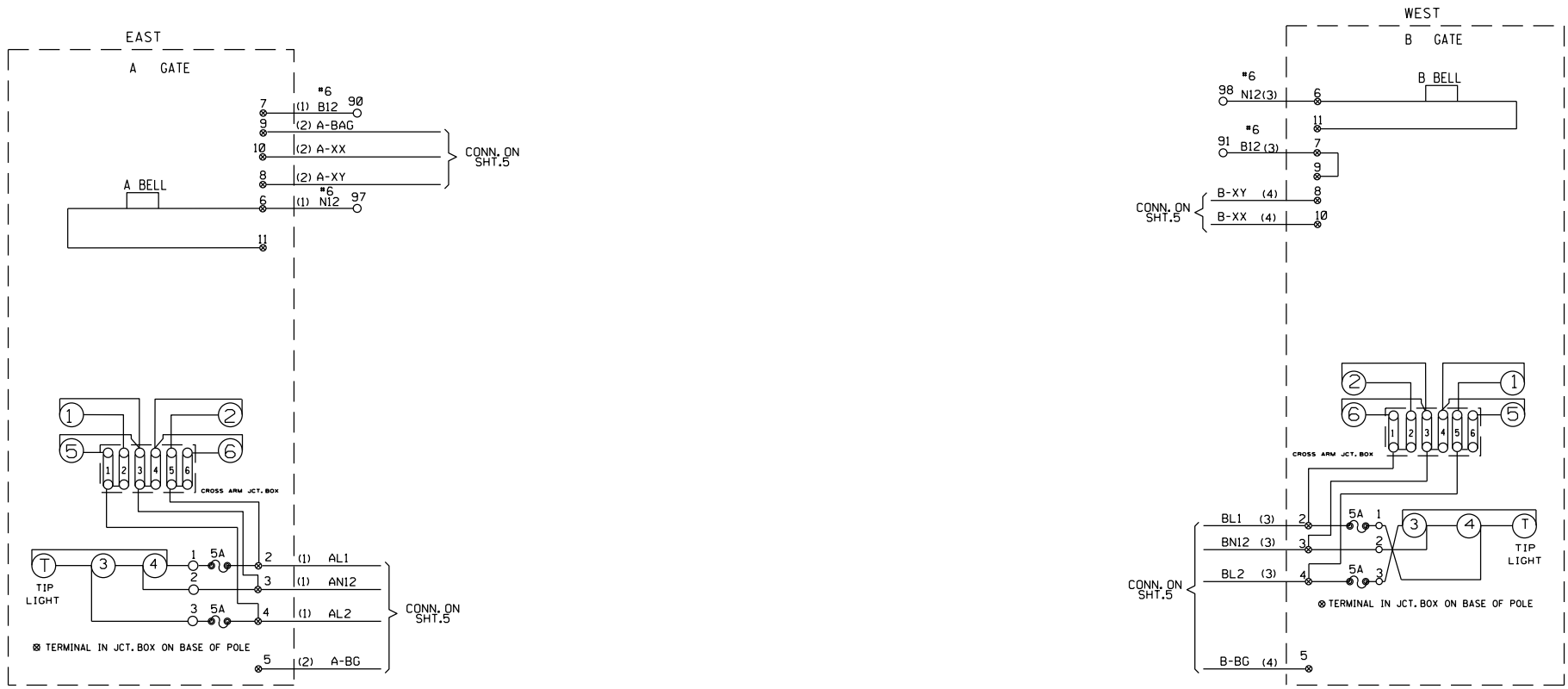

CABLE NO. 1 5C.NO.6 B.T.
CABLE NO. 2 5C.NO.9 B.T.
CABLE NO. 3 5C.NO.6 B.T.
CABLE NO. 4 5C.NO.9 B.T.

WOODLAND, IL.
MAIN STREET
M.P. 81.8
VILLA GROVE SUBDIVISION
D.O.T.#167 580G

					Revised: 9-2-10 UPDATED TRACK WIRES TO MDSAI, ADDED 5A FUSES TO GATES PER FIELD AC Rec#: 16984 WO#: N/A IS: 7-13-10 / AFD/WIT/ /	REV. 8-7-06 INSTALLED 20A SSCC AND MS-2000 PER FIELD A.C. REC#14033 6-30-06 RD/WITT	REV. 2-22-02 INSTALL PMD-2, REDRAW ON CAD PER FIELD AC 11-20-01 RD/CRD/CDL	CIRCUIT MODIFICATIONS ARE NOT TO BE MADE WITHOUT AUTHORITY FROM THE OFFICE OF SIGNAL DESIGN	DES: DIG: CHK: A.F.E. ID= 030008180.6X	UNION PACIFIC RAILROAD 81st. ST., CHICAGO, ILLINOIS TO VILLA GROVE, ILLINOIS C.T.C. CIRCUITS Office of Sr.AVP Engineering - Signal/TCO OMAHA NEBR.	DATE 11-20-01 SHEET 6 DWG 81.8 S-300-M

SAFTRAN MODEL "EM" (GRISWOLD)

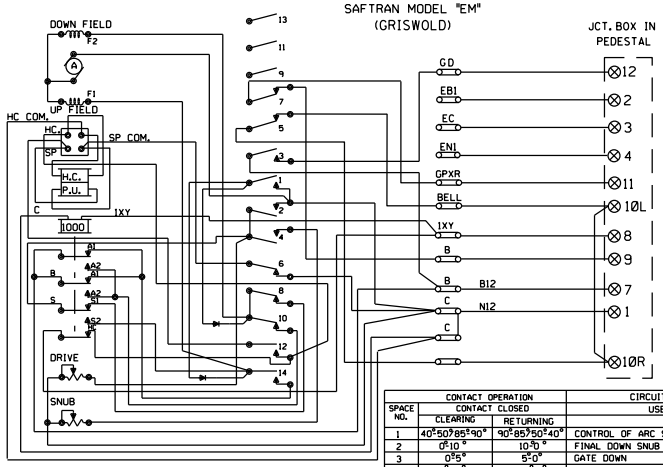

SPACE NO.	CONTACT OPERATION: CONTACT CLOSED — CLEARING	CONTACT OPERATION: CONTACT CLOSED — RETURNING	CIRCUIT BREAKER FUNCTIONS: USE OF CONTACT
1	40°50°85°90°	90°85°50°40°	CONTROL OF ARC SUPRESSING RECTIFIERS
2	0°10°	10°0°	FINAL DOWN SNUB
3	0°5°	5°0°	GATE DOWN
4	0°44°	44°0°	DOWN SNUB
5	10°90°	90°10°	TO CUT OFF BELL WHEN GATE ARM IS DOWN
6	80°90°	90°80°	CONTROL OF SOLENOID PICK UP
7	80°90°	90°80°	TO CONTROL GPR RELAY & KEEP FLASHING LIGHTS OPERATING UNTIL GATES CLEAR
8	0°5°80°90°	90°80°5°0°	UP SNUB
9	—	—	SPARE
10	45°90°	90°45°	MOTOR CUTOUT(DOWN)
11	—	—	SPARE
12	0°90°	80°0°	OPERATED BY MOTOR CUTOUT SWITCH TO CUT OFF CURRENT FROM SOLENOID PICKUP
13	—	—	NO CAM
14	0°90°	80°0°	MOTOR CUTOUT(UP)

WCH 3597

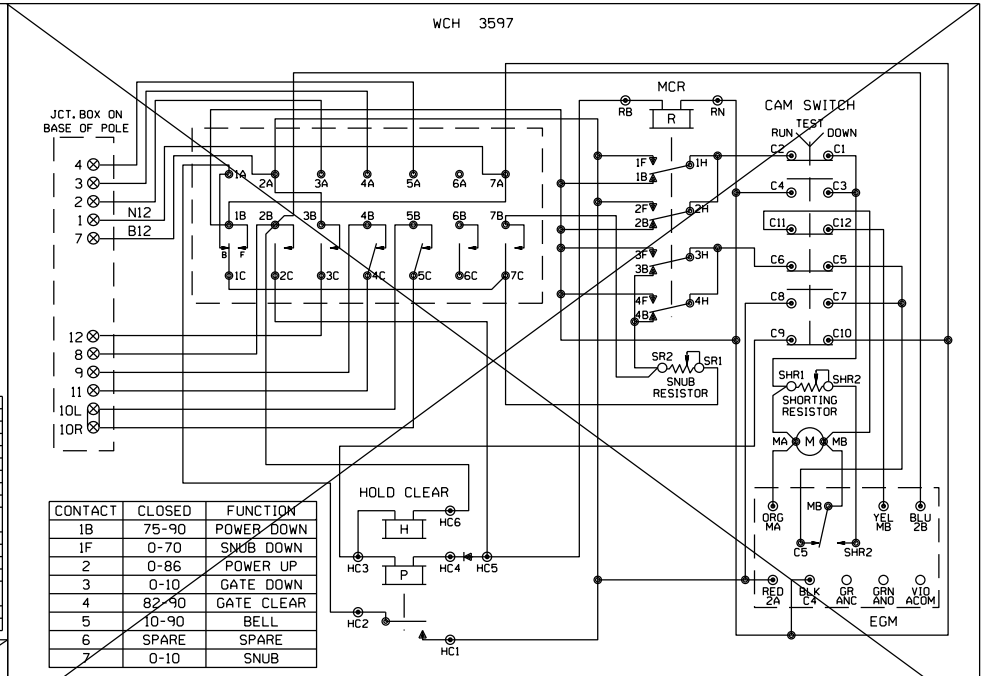

CONTACT	CLOSED	FUNCTION
1B	75-90	POWER DOWN
1F	0-70	SNUB DOWN
2	0-86	POWER UP
3	0-10	GATE DOWN
4	82-90	GATE CLEAR
5	10-90	BELL
6	SPARE	SPARE
7	0-10	SNUB

SAFETRAN PRODUCTS MODEL "S" MECHANISM

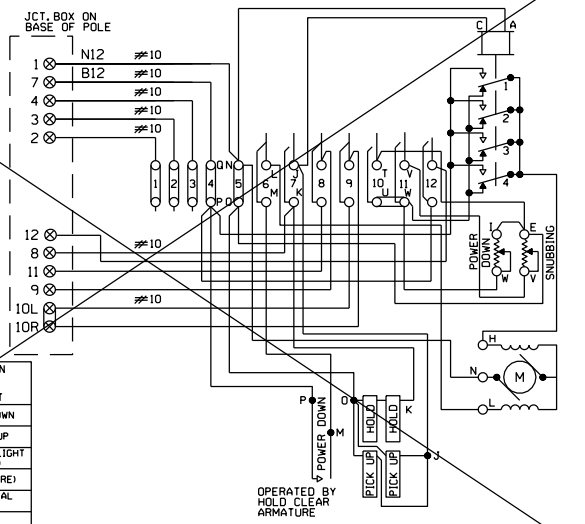

CONT. SPACE NO.	CLEARING (UP) CLOSES	CLEARING (UP) OPENS	RETURNING (DN.) CLOSES	RETURNING (DN.) OPENS	FUNCTION OF CONTACT
6	45°	—	—	45°	POWER DOWN
7	—	89°	89°	—	POWER UP
8	83°	—	—	83°	FLASHING LIGHT (SPARE)
9	5°	—	—	5°	BELL (SPARE)
10	—	5°	5°	—	HORIZONTAL SNUB
11	—	45°	45°	—	DOWN SNUB
12	—	5°	5°	—	GATE DOWN

SHOW TYPE MECH. INSTALLED

ALL MECHANISMS SHOWN IN THE CLEAR POSITION

JCT. BOX ON BASE POLE

L	R	L	R
1		7	
2		8	
3		9	
4		10	
5		11	
6		12	

WCH 3593-E

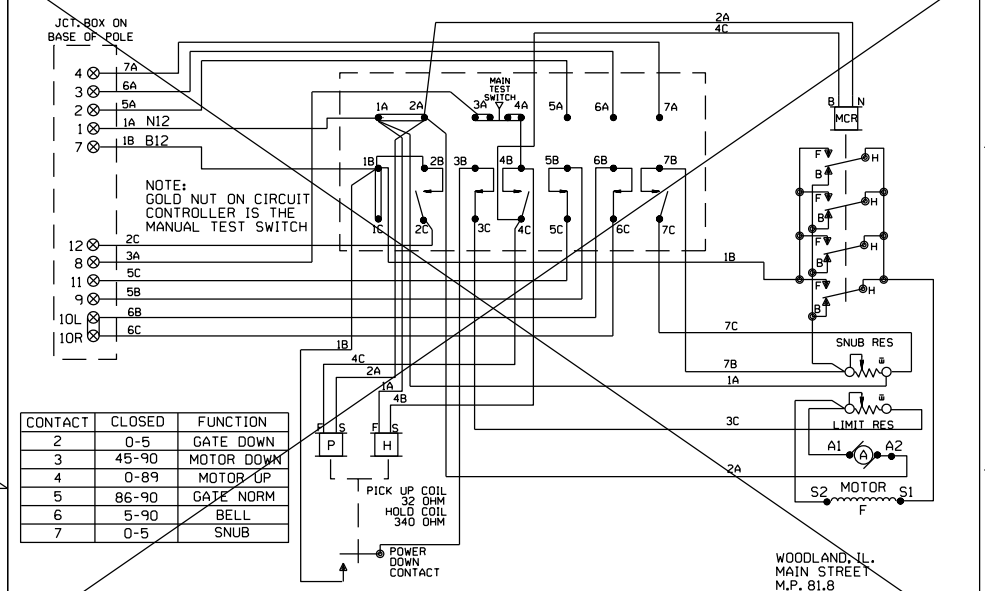

CONTACT	CLOSED	FUNCTION
2	0-5	GATE DOWN
3	45-90	MOTOR DOWN
4	0-89	MOTOR UP
5	86-90	GATE NORM
6	5-90	BELL
7	0-5	SNUB

WOODLAND, IL.
MAIN STREET
M.P. 81.8
VILLA GROVE SUBDIVISION
D.O.T. #167 580G

Revised: 9-2-10 UPDATED TRACK WIRES TO MOSAI. ADDED 5A FUSES TO GATES PER FIELD AC Rec'd: 16984 WO#: N/A IS: 7-13-10 AFD/WIT/ / /	REV. 8-7-06 INSTALLED 20A SSCC AND MS-2000 PER FIELD A.C. REC#14033 6-30-06 RD/WITT	REV. 2-22-02 INSTALL PMD-2, REDRAW ON CAD PER FIELD AC 11-20-01 RD/CRD/CDL	CIRCUIT MODIFICATIONS ARE NOT TO BE MADE WITHOUT AUTHORITY FROM THE OFFICE OF SIGNAL DESIGN	DES: DIG: CHK: A.F.E. ID: 030008180.7X

UNION PACIFIC RAILROAD
81st. ST., CHICAGO, ILLINOIS
TO VILLA GROVE, ILLINOIS
C.T.C. CIRCUITS
Office of Sr.AVP Engineering - Signal/TCO OMAHA NEBR.

DATE 11-20-01
SHEET 7
DWG 81.8
S-300-M

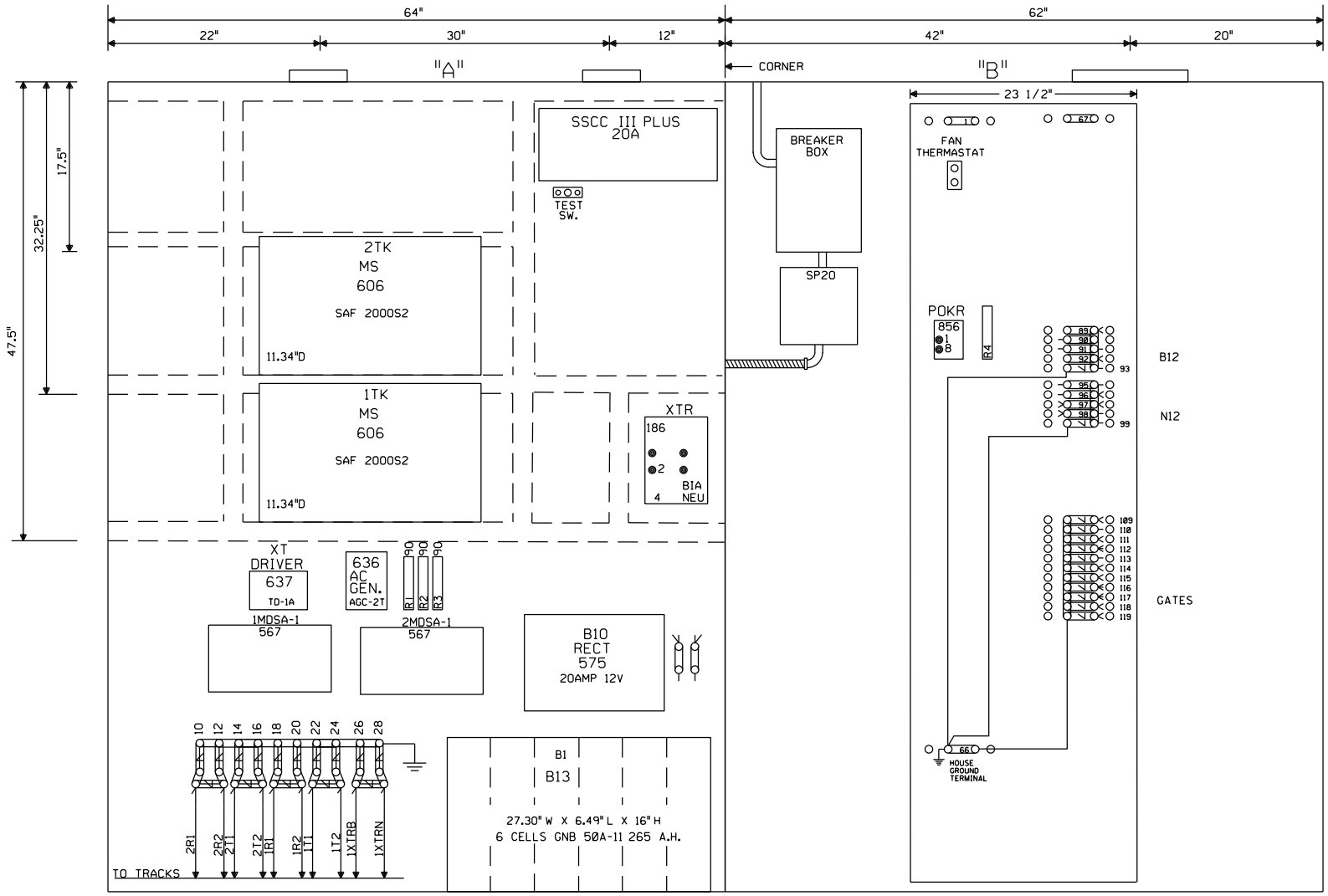

SCALE: 1.5 INCHES = 1 FOOT

NOTE: ALL DIMENSIONS SHOWN ARE APPROXIMATE.

WOODLAND, IL.
MAIN STREET
M.P. 81.8
VILLA GROVE SUBDIVISION
D.O.T. #167 580G

			Revised: 9-2-10 UPDATED TRACK WIRES TO MDSA1, ADDED 5A FUSES TO GATES PER FIELD AC Rec#: 16984 WO#: N/A IS: 7-13-10 AFD/WIT/ / /	Revised: 04-12-10 INSTALLED EC5 BETWEEN WATSEKA & WOODLAND JCT. M.P. 77.45 TO M.P. 82.40. Rec#: 16757 WO#: 56908 IS: 02-13-10 /JJL TLB/WIT/CTC/MDF	REV. 8-7-06 INSTALLED 20A SSCC AND MS-2000 PER FIELD A.C. REC#14033 6-30-06 RD/WITT	REV. 8-7-06 INSTALLED CRTU W.O.#3327 REC#14033 6-30-06 RD/WITT/WITT/EML	REV. 2-22-01 INSTALL PMD-2, REDRAW ON CAD PER FIELD AC 11-20-01 RD/CRD/CDL	CIRCUIT MODIFICATIONS ARE NOT TO BE MADE WITHOUT AUTHORITY FROM THE OFFICE OF SIGNAL DESIGN	DES: DIG: CHK: A.F.E. ID= 030008180.8X	UNION PACIFIC RAILROAD 81st. ST., CHICAGO, ILLINOIS TO VILLA GROVE, ILLINOIS C.T.C. CIRCUITS Office of Sr.AVP Engineering - Signal/TCO OMAHA NEBR.	DATE 11-20-01 SHEET 8 DWG 81.8 S-300-M

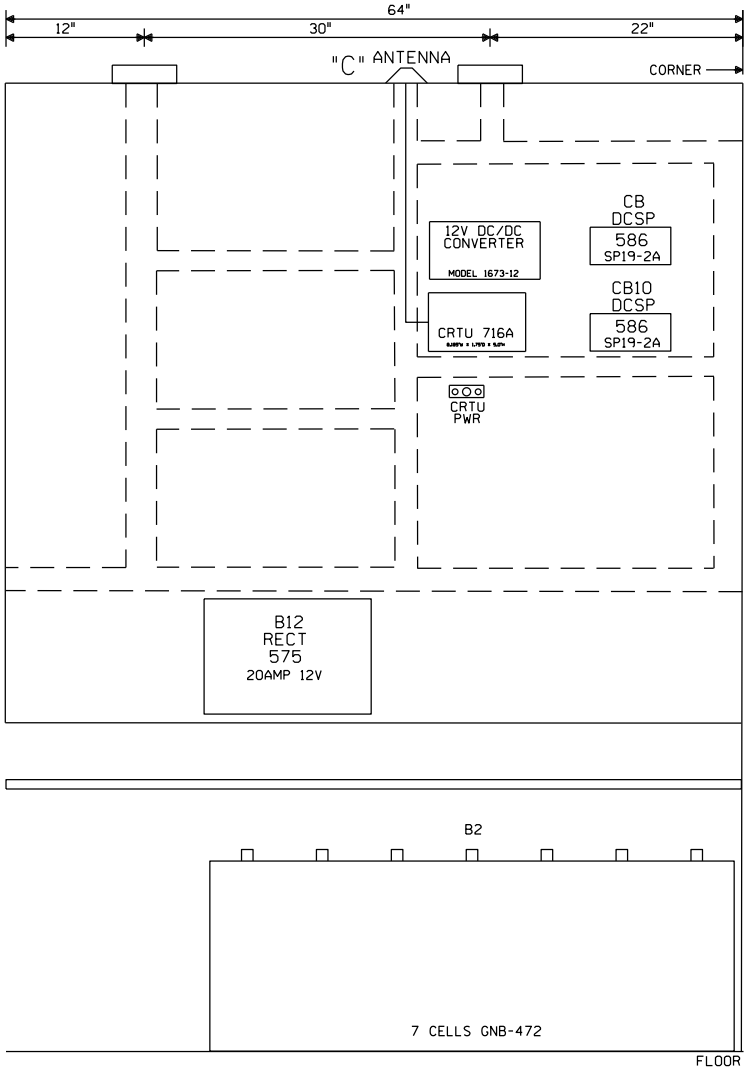

NOTE: ALL DIMENSIONS SHOWN
ARE APPROXIMATE

WOODLAND, IL.
MAIN STREET
M.P. 81.8
VILLA GROVE SUBDIVISION
D.O.T. #167 580G

				Revised: 04-12-10 INSTALLED EC5 BETWEEN WATSEKA & WOODLAND JCT. M.P. 77.45 TO M.P. 82.40. Rec#: 16757 WO#: 56908 IS: 02-13-10 /JJL TLB/WIT/CTC/MDF	REV. 8-7-06 INSTALLED 20A SSCC AND MS-2000 PER FIELD A.C. REC#14033 6-30-06 RD/WITT	REV. 8-7-06 INSTALLED CRTU W.O.#3327 REC#14033 6-30-06 RD/WITT/WITT/EML	REV. 2-22-01 INSTALL PMD-2, REDRAW ON CAD PER FIELD AC 11-20-01 RD/CRD/CDL	CIRCUIT MODIFICATIONS ARE NOT TO BE MADE WITHOUT AUTHORITY FROM THE OFFICE OF SIGNAL DESIGN	DES: DIG: CHK: A.F.E. ID= 030008180.9X	UNION PACIFIC RAILROAD 81st. ST., CHICAGO, ILLINOIS TO VILLA GROVE, ILLINOIS C.T.C. CIRCUITS Office of Sr.AVP Engineering - Signal/TCO OMAHA NEBR.	DATE 11-20-01 SHEET 9 DWG 81.8 S-300-M

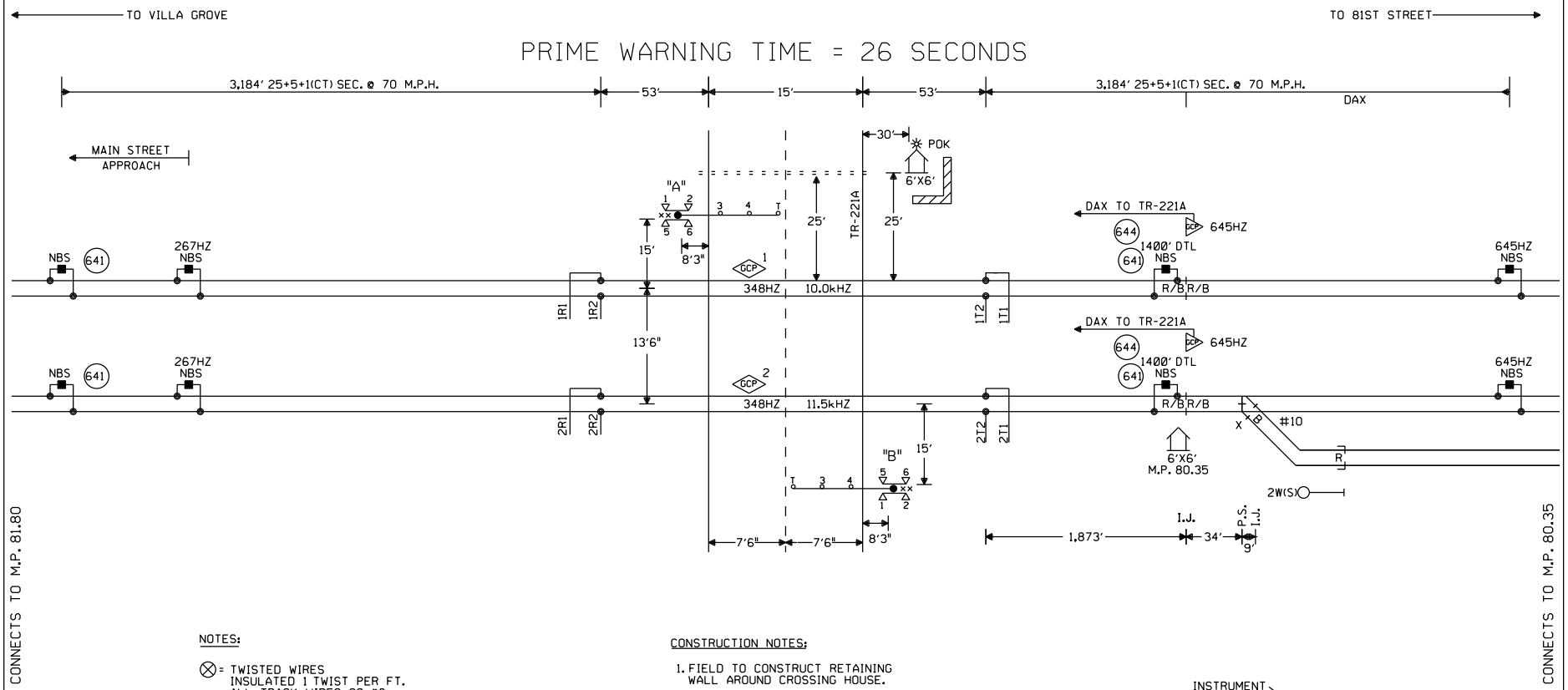

NOTES:

⊗ = TWISTED WIRES
INSULATED 1 TWIST PER FT.
ALL TRACK WIRES 2C. #6

TRANSMITTER AND RECEIVER LEADS TO BE SEPARATED BY AT LEAST 12" IN TRENCH, LENGTHS SHOULD NOT EXCEED MANUFACTURES RECOMMENDATION.

TOP OF FOUNDATION TO BE AT SAME ELEVATION AS THE SURFACE OF THE TRAVELED WAY & NO MORE THAN 4" ABOVE THE SURFACE OF THE GROUND.

ALL BUNGALOW WIRING TO BE #16 AWG FLEX UNLESS OTHERWISE SPECIFIED EXCEPT ALL GROUND WIRE TO BE #6 AWG FLEX OR LARGER.

ALL WIRING IN GATE MECHANISM TO BE #10 "AWG FLEX".

REFER TO UP STANDARD DWG FOR BUNGALOW GROUNDING.

PORTABLE GENERATOR EXTENSION CORD FOR 240V TO 240V IS PROVIDED AS WELL AS A 120V TO 240V ADAPTER.

ALL LIGHTS TO BE 12" ROUNDELS.

= = = = = = 4" X 40' CONDUIT

LIGHTS: LED LIGHTS

GATE A: 15'
GATE B: 15'

xx = BELL

= RETAINING WALL

CONSTRUCTION NOTES:

1. FIELD TO CONSTRUCT RETAINING WALL AROUND CROSSING HOUSE.
2. HOUSE PLACEMENT TO BE VERIFIED BY ICC PERSONNEL.
3. ORDER AND INSTALL THE FOLLOWING EQUIPMENT AT M.P. 80.35 AS PART OF THIS PROJECT:
   (1)TAB 575 RECTIFIER
   (1)TAB B15 BATTERY
   (1)TAB 585 ACSP
   (1)TAB 856 RELAY
   (1)TAB 618 SURGE PANEL
   (1)TAB 619 SURGE PANEL
   (4)TAB 380 ARRESTORS
   (2)TAB 583 EQUALIZERS
   (1)TAB 698 GCP 4000 UNIT
   (1)30-AMP BREAKER FOR TAB 795 BREAKER BOX

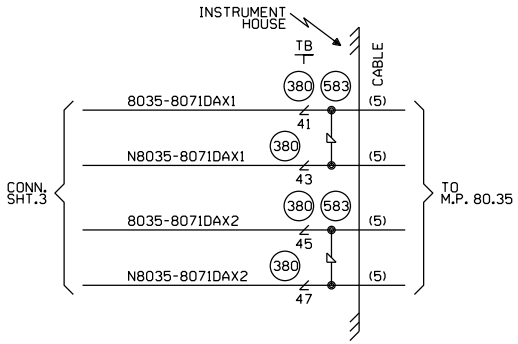

OFFSET AND ISLAND DISTANCES TO BE VERIFIED BY FIELD

W(S) ←○→ E(N)

CABLE TABULATION

CABLE NO.5 7C.NO.14 U.G.B.T. HOUSE TO M.P. 80.35

NEW SHEET

Designed: 07/15/14 INSTALL GATES, FLASHERS AND CWT AT TR-221A, M.P. 80.71 Rec#: WO#: 25083 IS: /MRN / /NST/JTB	MODIFICATION LEVEL		CIRCUIT MODIFICATIONS ARE NOT TO BE MADE WITHOUT AUTHORITY FROM THE OFFICE OF SIGNAL DESIGN	Date: 07/15/14 Des: NST Chk: MRN AFE: 25083	UNION PACIFIC RAILROAD WOODLAND, ILLINOIS TR-221A VILLA GROVE SUBDIVISION Office of AVP Engineering - Signal Omaha, Nebraska	Sh.: 1 DOT 167579M MP: 80.71 ID: 03008071.1X
	O. A. LAST LEVEL CHECKED	DU				
	LAST LEVEL MOD THIS TYPICAL	DU				
	LAST LEVEL BY DESIGNER	DU				
	CHANGED FROM TYPICAL? REV 01.24.11 4K 2TKUGTYP.1	Y				

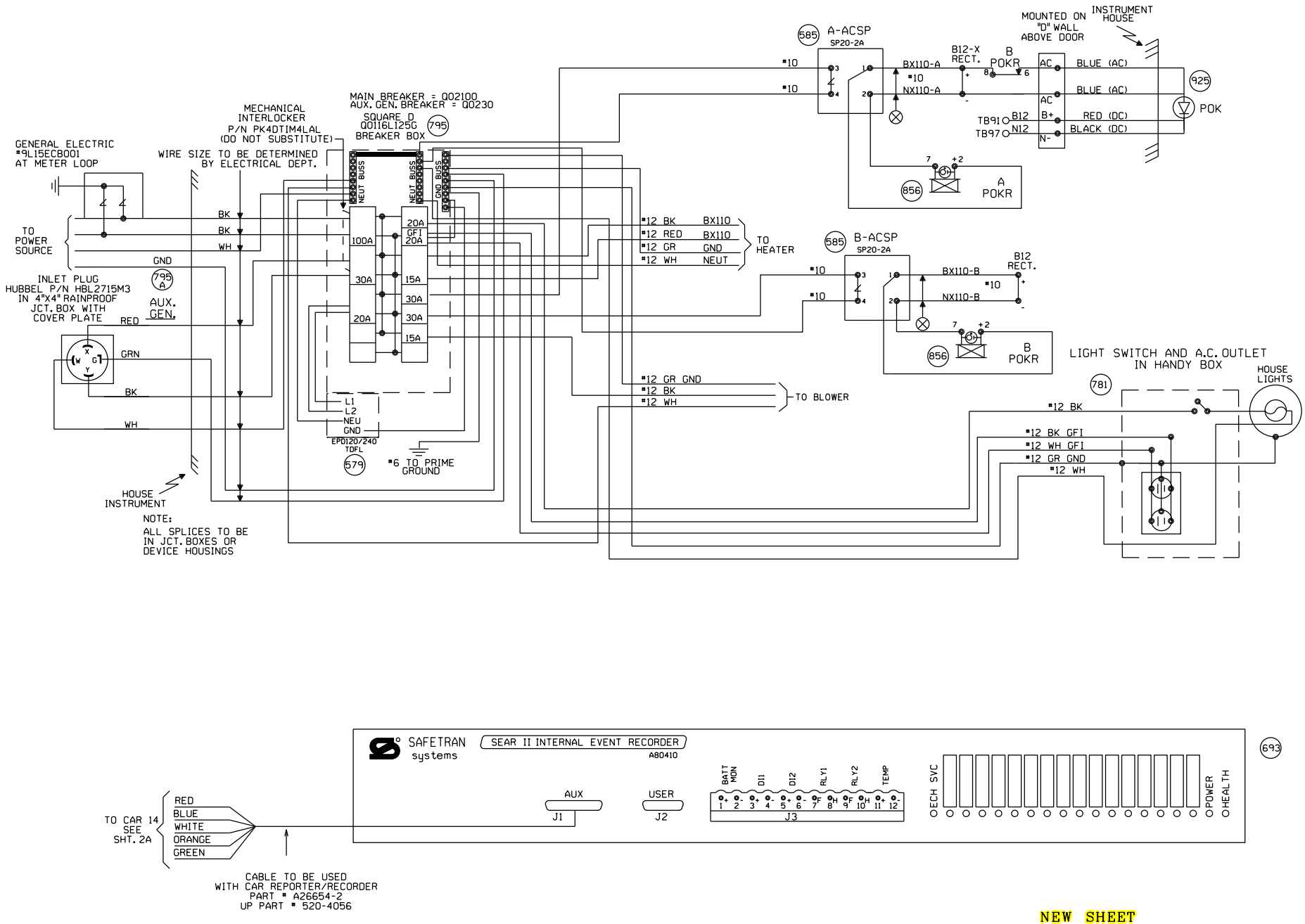

NEW SHEET

					Designed: 07/15/14 INSTALL GATES, FLASHERS AND CWT AT TR-221A, M.P. 80.71 Rec#: WO#: 25083 IS: /MRN / /NST/JTB	MODIFICATION LEVEL D.A. LAST LEVEL CHECKED DU LAST LEVEL MOD THIS TYPICAL DU LAST LEVEL BY DESIGNER DU CHANGED FROM TYPICAL? Y REV 01.24.11 4K SEARAC.2	CIRCUIT MODIFICATIONS ARE NOT TO BE MADE WITHOUT AUTHORITY FROM THE OFFICE OF SIGNAL DESIGN	Date: 07/15/14 Des: NST Chk: MRN AFE: 25083	UNION PACIFIC RAILROAD WOODLAND, ILLINOIS TR-221A VILLA GROVE SUBDIVISION Office of AVP Engineering - Signal Omaha, Nebraska	Sh.: 2 DOT 167579M MP: 80.71 ID: 03008071.2X

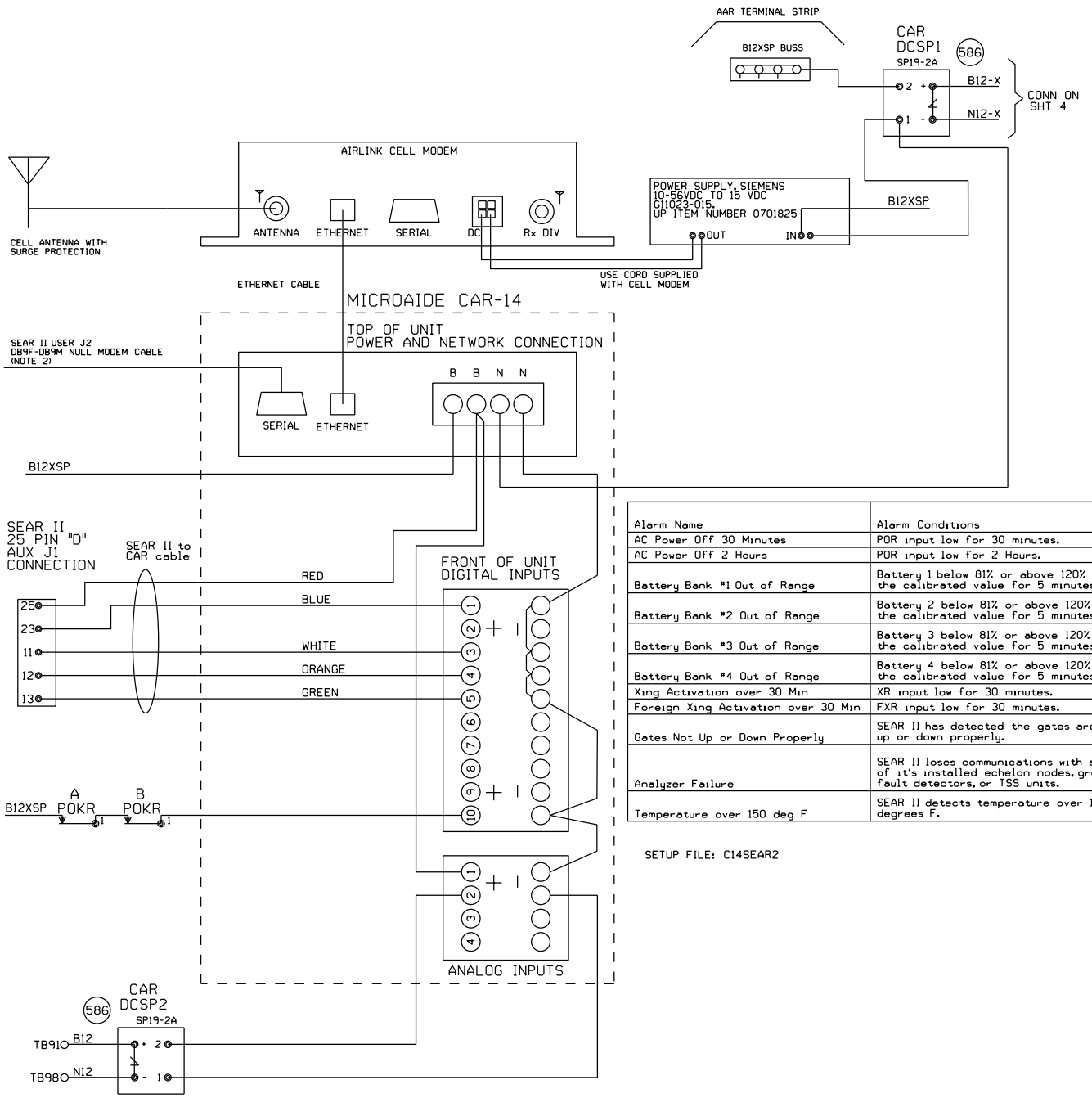

NOTE:
1) DO NOT JUMPER UNUSED INPUTS
2) THE CAR14 SERIAL PORT IS AVAILABLE TO ADD REMOTE CONNECTIVITY TO EXISTING LOGGING EQUIPMENT. USE NULL MODEM CABLE WITH SHIELDING DISCONNECTED AT ONE OR BOTH SIDES.

ANALOG INPUTS:
A1) B12X BATTERY BANK
A2) B12 BATTERY BANK
A3) BATTERY BANK 3
A4) BATTERY BANK 4

DIGITAL INPUTS
D1) XR (BLUE WIRE)
D2) FOREIGN XR
D3) ANALYZER FAILURE (WHITE WIRE)
D4) HIGH TEMPERATURE (ORANGE WIRE)
D5) GATES NOT UP OR DOWN PROPERLY (GREEN WIRE)
D10) POWER OFF INDICATION

Alarm Name	Alarm Conditions	Alarm Clearing Conditions	Cleared by Maintainer Mode?
AC Power Off 30 Minutes	POR input low for 30 minutes.	POR input high for 5 minutes.	No
AC Power Off 2 Hours	POR input low for 2 Hours.	POR input high for 5 minutes.	No
Battery Bank #1 Out of Range	Battery 1 below 81% or above 120% of the calibrated value for 5 minutes.	Battery 1 within acceptable range for 5 minutes.	No
Battery Bank #2 Out of Range	Battery 2 below 81% or above 120% of the calibrated value for 5 minutes.	Battery 2 within acceptable range for 5 minutes.	No
Battery Bank #3 Out of Range	Battery 3 below 81% or above 120% of the calibrated value for 5 minutes.	Battery 3 within acceptable range for 5 minutes.	No
Battery Bank #4 Out of Range	Battery 4 below 81% or above 120% of the calibrated value for 5 minutes.	Battery 4 within acceptable range for 5 minutes.	No
Xing Activation over 30 Min	XR input low for 30 minutes.	XR input high for 10 seconds.	Yes
Foreign Xing Activation over 30 Min	FXR input low for 30 minutes.	FXR input high for 10 seconds.	Yes
Gates Not Up or Down Properly	SEAR II has detected the gates are not up or down properly.	SEAR II has detected the gates are up or down properly.	No
Analyzer Failure	SEAR II loses communications with any of it's installed echelon nodes, ground fault detectors, or TSS units.	SEAR II has recovered after an analyzer failure alarm.	No
Temperature over 150 deg F	SEAR II detects temperature over 150 degrees F.	SEAR II sensor detects temperature is OK after a High-Temp alarm.	No

SETUP FILE: C14SEAR2

NEW SHEET

Designed: 07/15/14
INSTALL GATES, FLASHERS AND CWT AT TR-221A, M.P. 80.71
Req'd: 1St
WO#: 25083 /MRN
/NST/JTB

MODIFICATION LEVEL	
O. A. LAST LEVEL CHECKED	DU
LAST LEVEL MOD THIS TYPICAL	DU
LAST LEVEL BY DESIGNER	DU
CHANGED FROM TYPICAL?	Y

mv 01.24.11 4K ACDCCAR14SI1.3

CIRCUIT MODIFICATIONS ARE NOT TO BE MADE WITHOUT AUTHORITY FROM THE OFFICE OF SIGNAL DESIGN

Date: 07/15/14
Des: NST
Chk: MRN
AFE: 25083

UNION PACIFIC RAILROAD
WOODLAND, ILLINOIS
TR-221A
VILLA GROVE SUBDIVISION
Office of AVP Engineering - Signal Omaha, Nebraska

Sh.: 2A
DOT 167579M
MP: 80.71
ID: 03008071.2AX

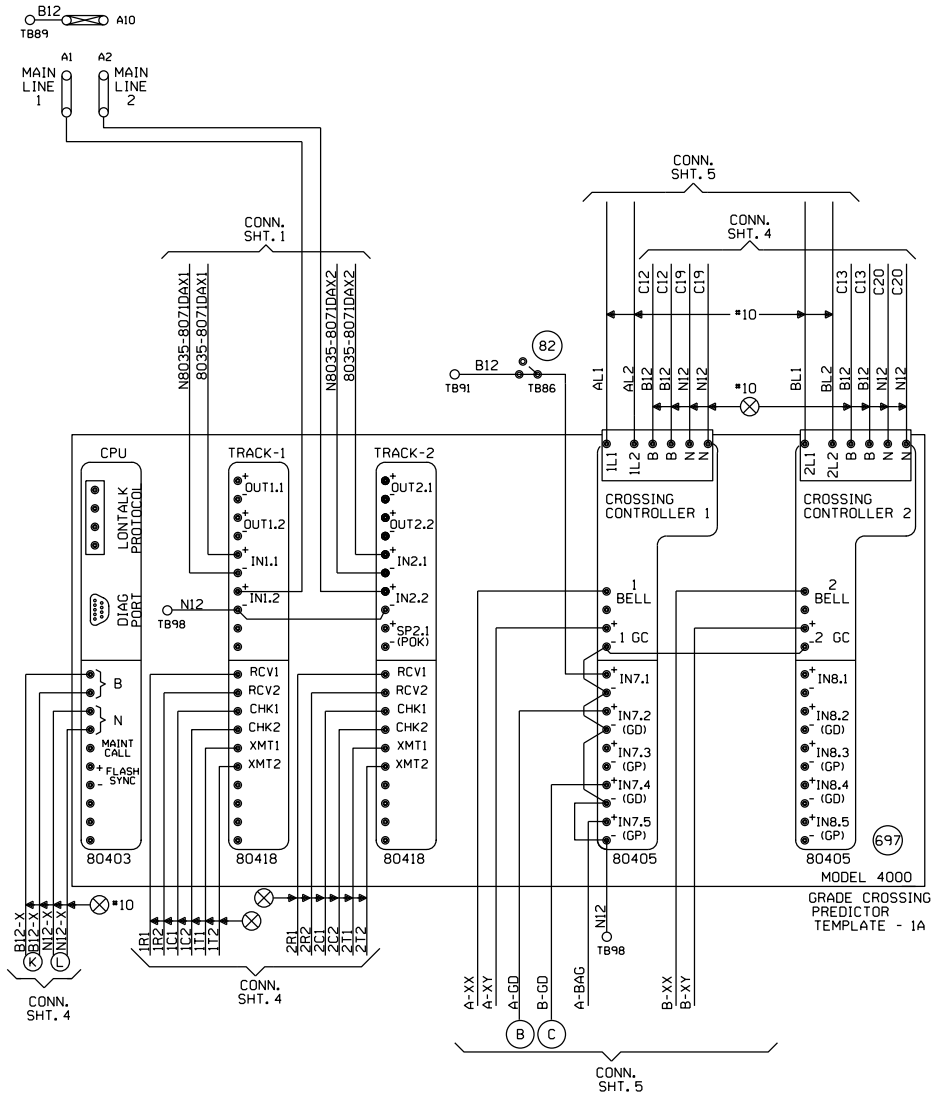

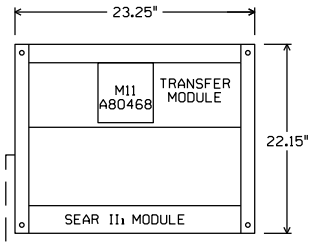

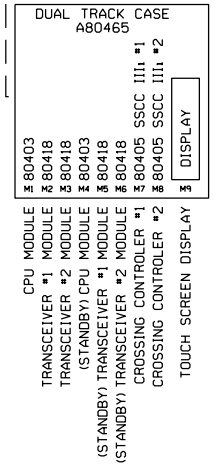

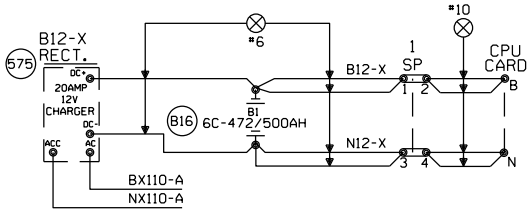

"Mf" FREQUENCY (HZ)	MAXIMUM TRANSMIT WIRE LENGTH (FEET)
86	100
114	125
156	150
211	200
285-970	250

NOTE:
EACH TRANSMITTER TO RAIL WIRE FROM XMT1 AND XMT2 MUST NOT EXCEED THE MAXIMUM LENGTH SPECIFIED IN THE TABLE SHOWN. THE RECEIVER WIRE LENGTH IS NOT CRITICAL. DOES NOT APPLY TO 6 TRACK WIRE APPLICATION.

NEW SHEET

Designed: 07/15/14
INSTALL GATES, FLASHERS AND CWT AT TR-221A, M.P. 80.71
Rec*: MRN
IS: NST/JTB
WO*: 25083

MODIFICATION LEVEL	
D. A. LAST LEVEL CHECKED	DU
LAST LEVEL MOD THIS TYPICAL	DU
LAST LEVEL BY DESIGNER	DU
CHANGED FROM TYPICAL?	Y

rev 01.24.11 4K 2TKGF.3

CIRCUIT MODIFICATIONS ARE NOT TO BE MADE WITHOUT AUTHORITY FROM THE OFFICE OF SIGNAL DESIGN

Date: 07/15/14
Des: NST
Chk: MRN
AFE: 25083

UNION PACIFIC RAILROAD
WOODLAND, ILLINOIS
TR-221A
VILLA GROVE SUBDIVISION
Office of AVP Engineering - Signal Omaha, Nebraska

Sh.: 3
DOT 167579M
MP: 80.71
ID: 03008071.3X

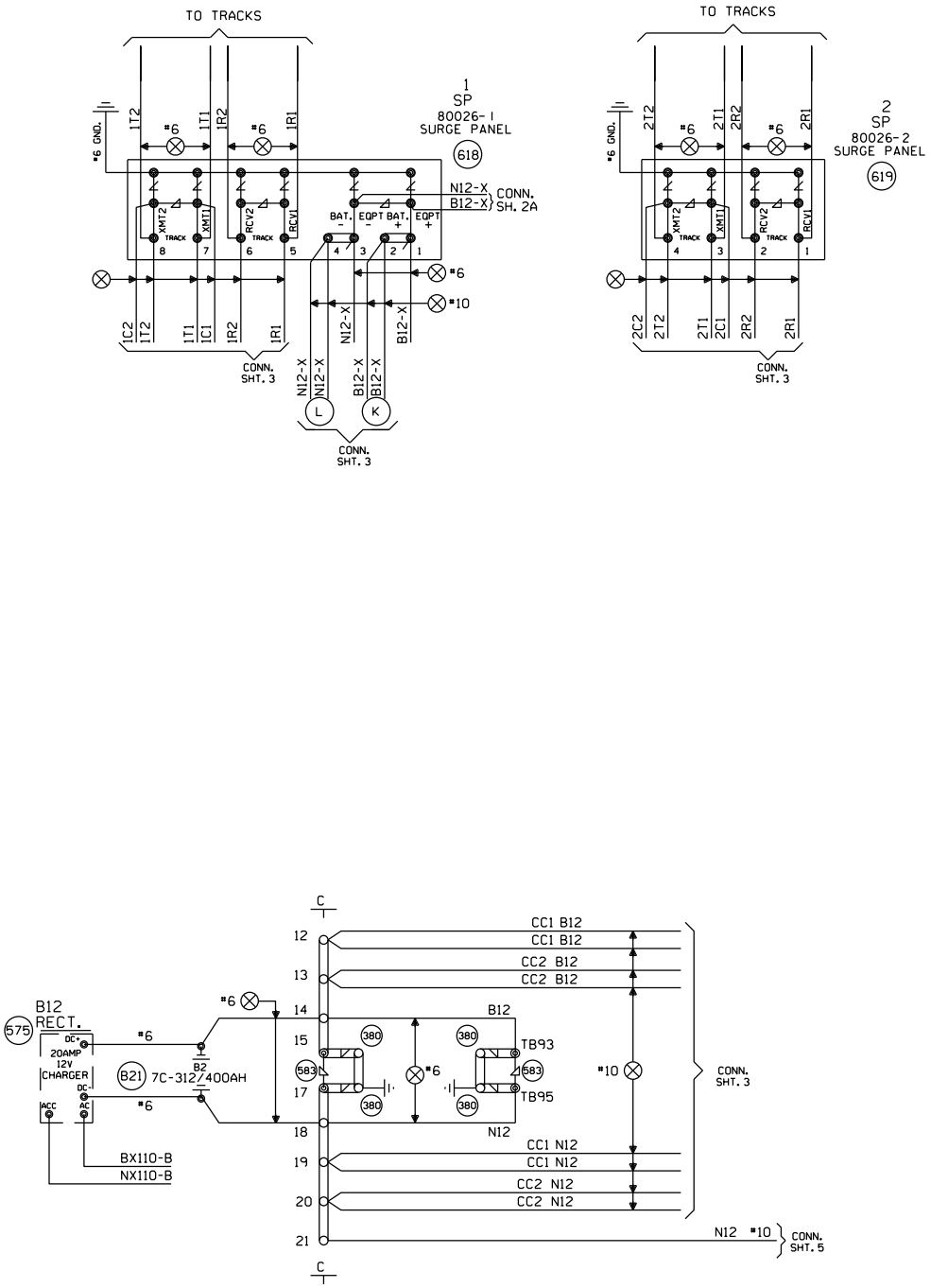

NEW SHEET

Designed: 07/15/14 INSTALL GATES, FLASHERS AND CWT AT TR-221A, M.P. 80.71 Rec#: WO#: 25083 IS: /MRN /NST/JTB	MODIFICATION LEVEL		CIRCUIT MODIFICATIONS ARE NOT TO BE MADE WITHOUT AUTHORITY FROM THE OFFICE OF SIGNAL DESIGN	Date: 07/15/14 Des: NST Chk: MRN AFE: 25083	UNION PACIFIC RAILROAD WOODLAND, ILLINOIS TR-221A VILLA GROVE SUBDIVISION Office of AVP Engineering - Signal Omaha, Nebraska	Sh.: 4 DOT 167579M MP: 80.71 ID: 03008071.4X
	D. A. LAST LEVEL CHECKED	DU				
	LAST LEVEL MOD THIS TYPICAL	DU				
	LAST LEVEL BY DESIGNER	DU				
	CHANGED FROM TYPICAL?	Y				
	REV 01.24.11 4K 4TKSPGFC.4					

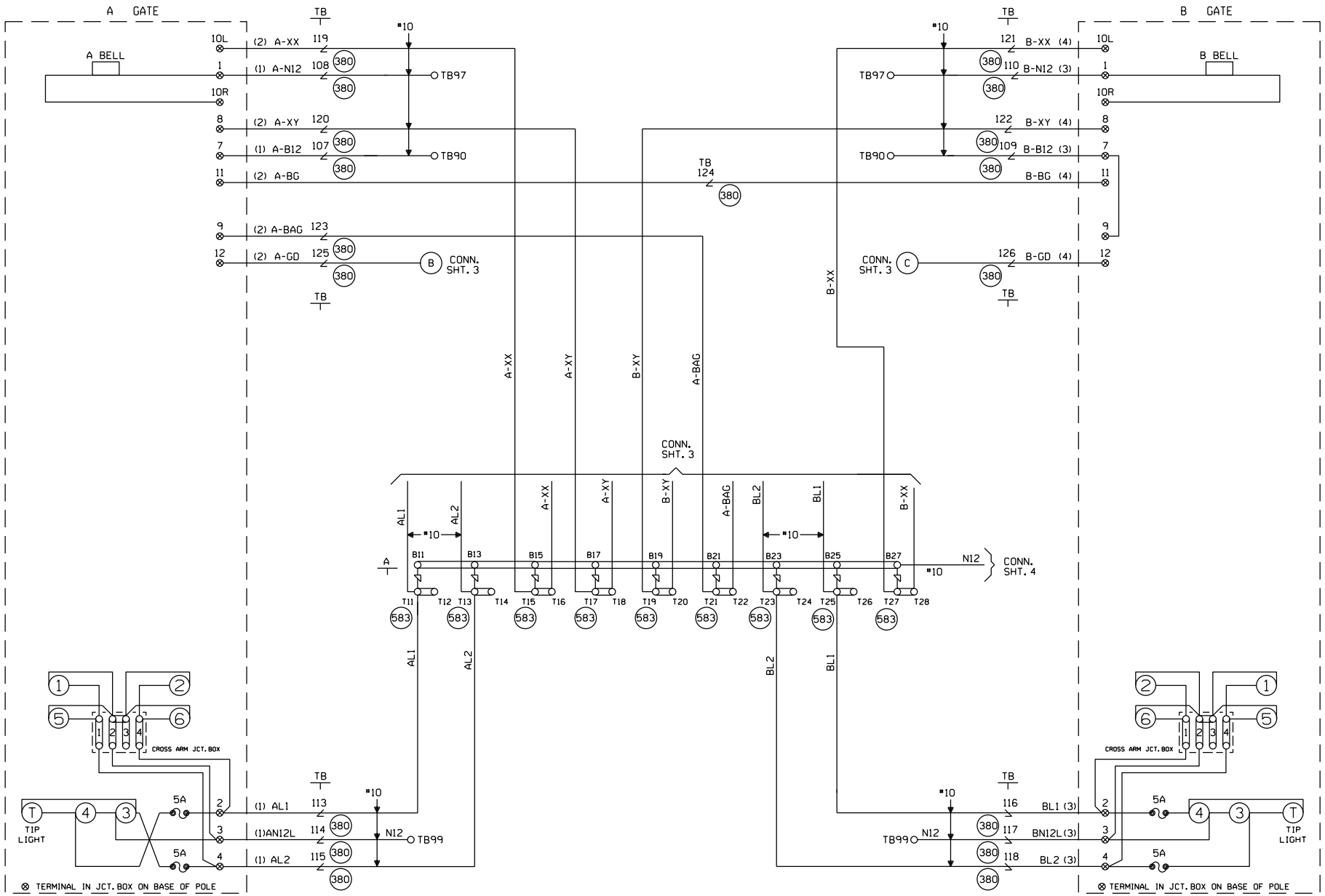

CABLE TABULATION

CABLE NO. 1 5C. NO.6 U.G.B.T. TO GATE A
CABLE NO. 2 7C. NO.14 U.G.B.T. TO GATE A
CABLE NO. 3 5C. NO.6 U.G.B.T. TO GATE B
CABLE NO. 4 7C. NO.14 U.G.B.T. TO GATE B

NEW SHEET

Designed: 07/15/14
INSTALL GATES, FLASHERS AND CWT AT TR-221A, M.P. 80.71
Rec#: WO#: 25083
IS: /MRN
/NST/JTB

MODIFICATION LEVEL	
Q. A. LAST LEVEL CHECKED	DU
LAST LEVEL MOD THIS TYPICAL	DU
LAST LEVEL BY DESIGNER	DU
CHANGED FROM TYPICAL?	Y

REV 01.24.11 4K GFSLTYP.5

CIRCUIT MODIFICATIONS ARE NOT TO BE MADE WITHOUT AUTHORITY FROM THE OFFICE OF SIGNAL DESIGN

Date: 07/15/14
Des: NST
Chk: MRN
AFE: 25083

UNION PACIFIC RAILROAD
WOODLAND, ILLINOIS
TR-221A
VILLA GROVE SUBDIVISION
Office of AVP Engineering - Signal Omaha, Nebraska

Sh.: 5
DOT 167579M
MP: 80.71
ID: 03008071.5X

WCH 3593-E

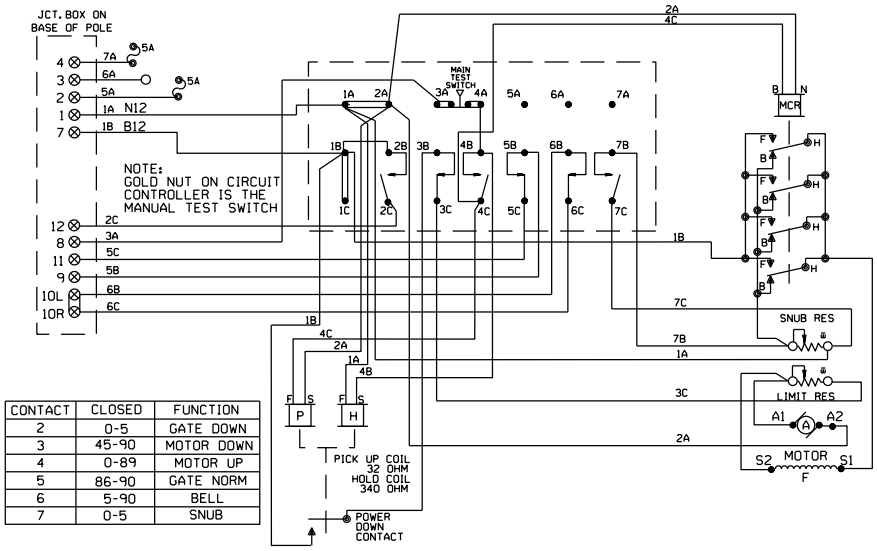

CONTACT	CLOSED	FUNCTION
2	0-5	GATE DOWN
3	45-90	MOTOR DOWN
4	0-89	MOTOR UP
5	86-90	GATE NORM
6	5-90	BELL
7	0-5	SNUB

WCH 3597-E

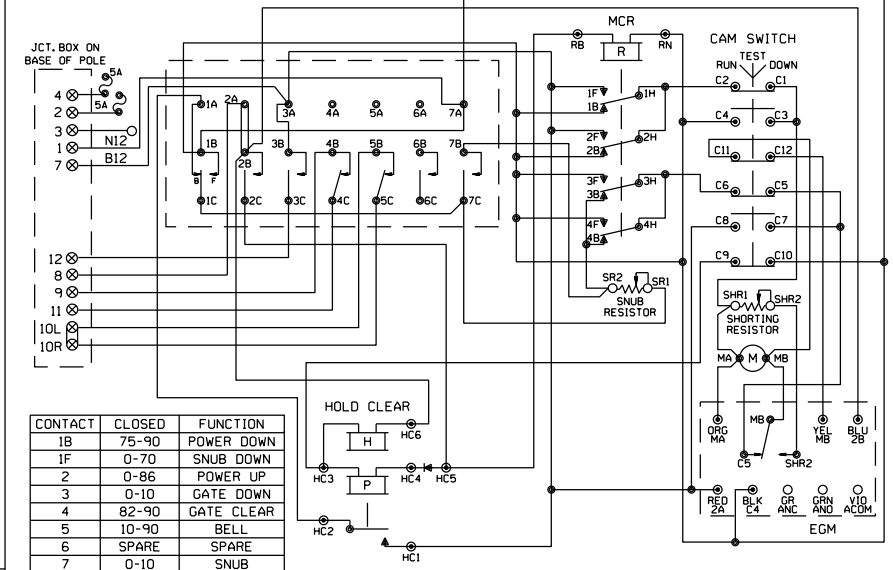

CONTACT	CLOSED	FUNCTION
1B	75-90	POWER DOWN
1F	0-70	SNUB DOWN
2	0-86	POWER UP
3	0-10	GATE DOWN
4	82-90	GATE CLEAR
5	10-90	BELL
6	SPARE	SPARE
7	0-10	SNUB

WCH 3597-RB

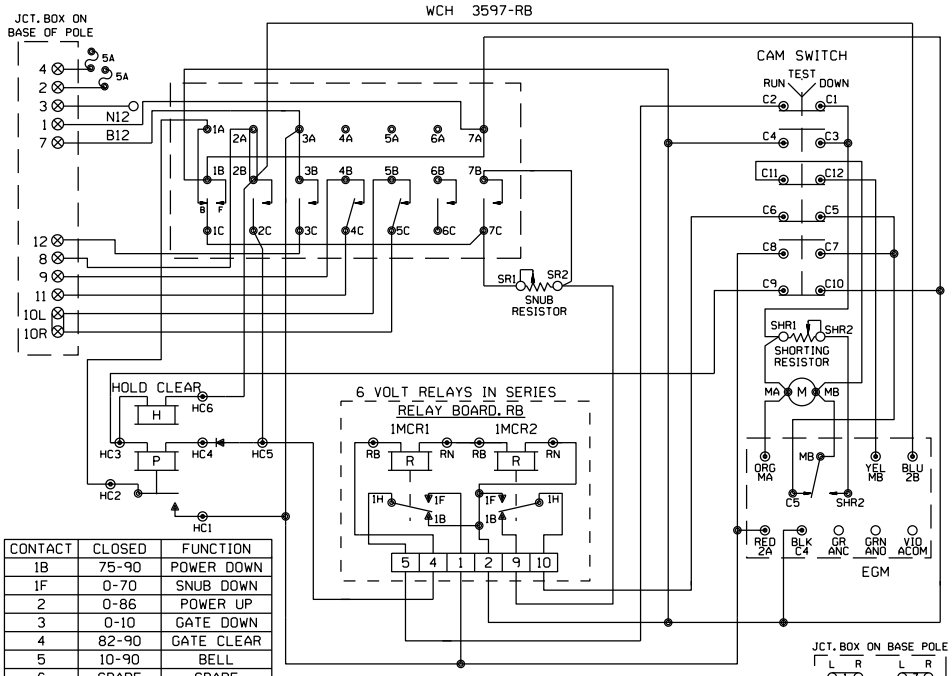

CONTACT	CLOSED	FUNCTION
1B	75-90	POWER DOWN
1F	0-70	SNUB DOWN
2	0-86	POWER UP
3	0-10	GATE DOWN
4	82-90	GATE CLEAR
5	10-90	BELL
6	SPARE	SPARE
7	0-10	SNUB

JCT. BOX ON BASE POLE

SHOW TYPE MECH. INSTALLED

ALL MECHANISMS SHOWN IN THE CLEAR POSITION

SAFETRAN S-60

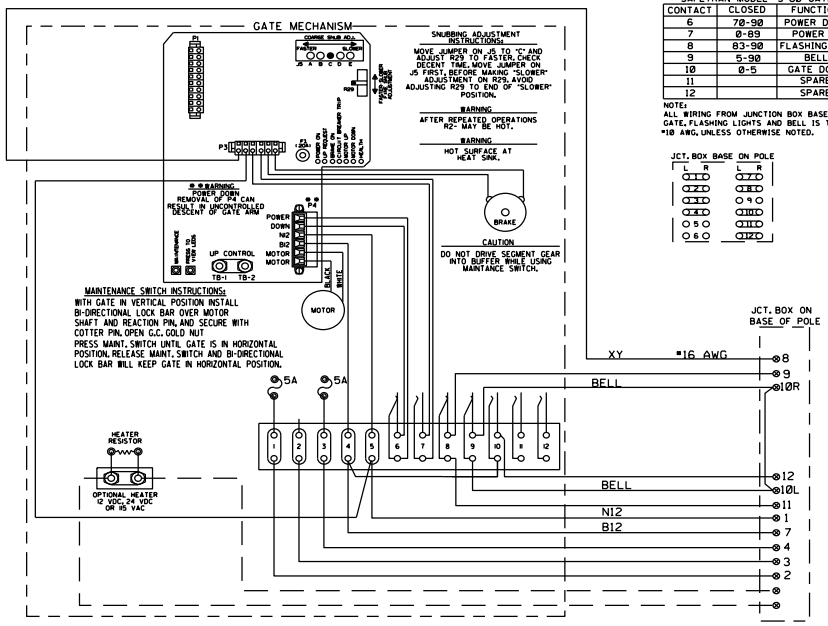

SAFETRAN MODEL "S-60" GATE

CONTACT	CLOSED	FUNCTION
6	70-90	POWER DOWN
7	0-89	POWER UP
8	83-90	FLASHING LGT.
9	5-90	BELL
10	0-5	GATE DOWN
11		SPARE
12		SPARE

NOTE:
ALL WIRING FROM JUNCTION BOX BASE TO GATE, FLASHING LIGHTS AND BELL IS TO BE #10 AWG, UNLESS OTHERWISE NOTED.

JCT. BOX BASE ON POLE

NEW SHEET

Designed: 07/15/14
INSTALL GATES, FLASHERS AND CWT AT TR-221A, M.P. 80.71
Rec#: WO#: 25083
IS: /MRN
/NST/JTB

MODIFICATION LEVEL	
Q.A. LAST LEVEL CHECKED	DU
LAST LEVEL MOD THIS TYPICAL	DU
LAST LEVEL BY DESIGNER	DU
CHANGED FROM TYPICAL?	N

REV 01.24.11 4K GWIRING.7

CIRCUIT MODIFICATIONS ARE NOT TO BE MADE WITHOUT AUTHORITY FROM THE OFFICE OF SIGNAL DESIGN

Date: 07/15/14
Des: NST
Chk: MRN
AFE: 25083

UNION PACIFIC RAILROAD

WOODLAND, ILLINOIS
TR-221A
VILLA GROVE SUBDIVISION
Office of AVP Engineering - Signal Omaha, Nebraska

Sh.: 6
DOT 167579M
MP: 80.71
ID: 03008071.6X

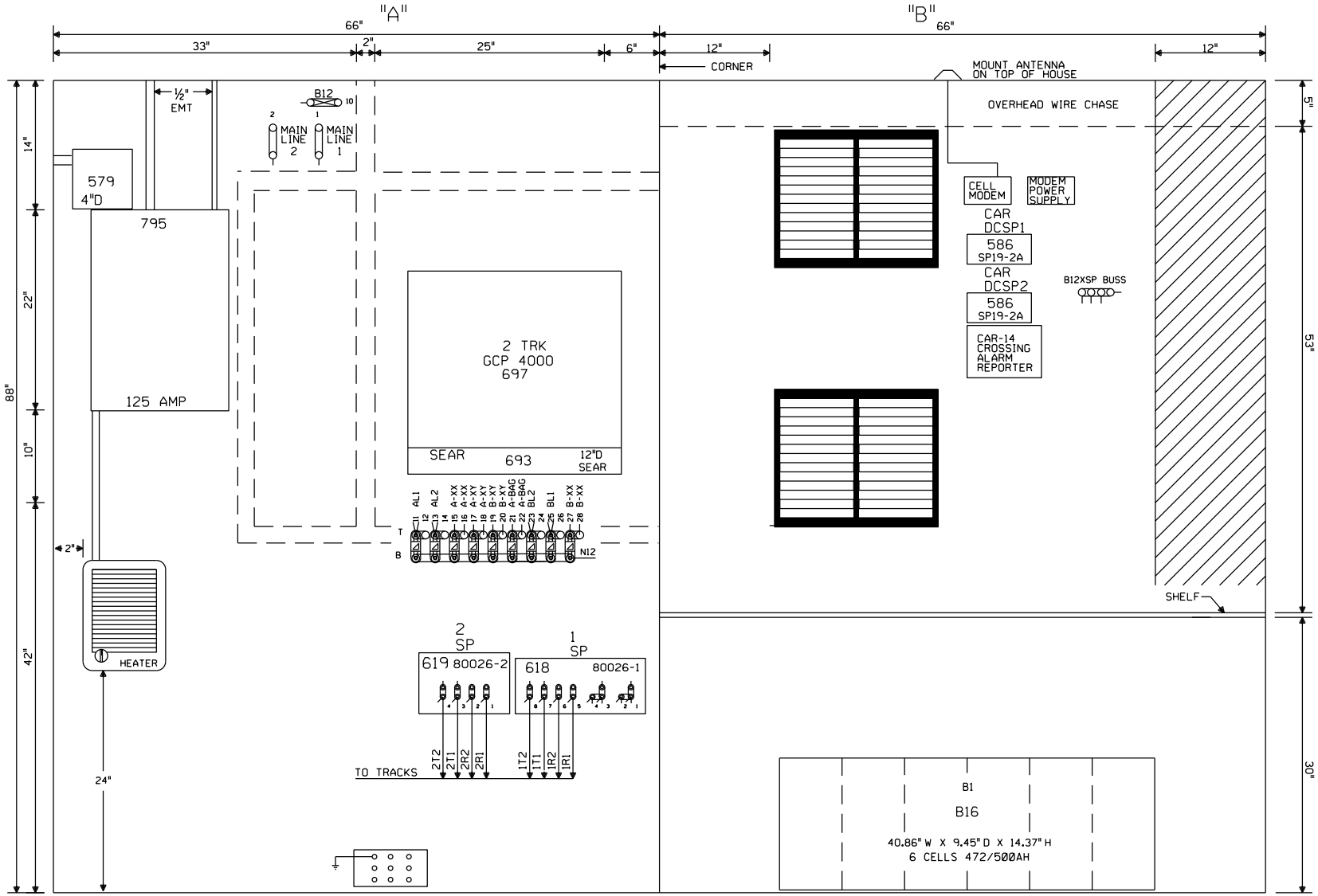

6X6 WAYSIDE/XING HOUSE WITH HEATER AND BLOWER U.P. PART#520-2529

NOTE: ALL DIMENSIONS SHOWN ARE APPROXIMATE.

NEW SHEET

Designed: 07/15/14

INSTALL GATES, FLASHERS AND CWT AT TR-221A, M.P. 80.71

Req#: 15: W0#: 25083 /MRN /NST/JTB

MODIFICATION LEVEL	
O.A. LAST LEVEL CHECKED	DU
LAST LEVEL MOD THIS TYPICAL	DU
LAST LEVEL BY DESIGNER	DU
CHANGED FROM TYPICAL?	Y

rev 01.24.11 4K 4TKGFC.8

CIRCUIT MODIFICATIONS ARE NOT TO BE MADE WITHOUT AUTHORITY FROM THE OFFICE OF SIGNAL DESIGN

Date: 07/15/14
Des: NST
Chk: MRN
AFE: 25083

UNION PACIFIC RAILROAD

WOODLAND, ILLINOIS
TR-221A
VILLA GROVE SUBDIVISION

Office of AVP Engineering - Signal Omaha, Nebraska

Sh.: 7
DOT 167579M
MP: 80.71
ID: 03008071.7X

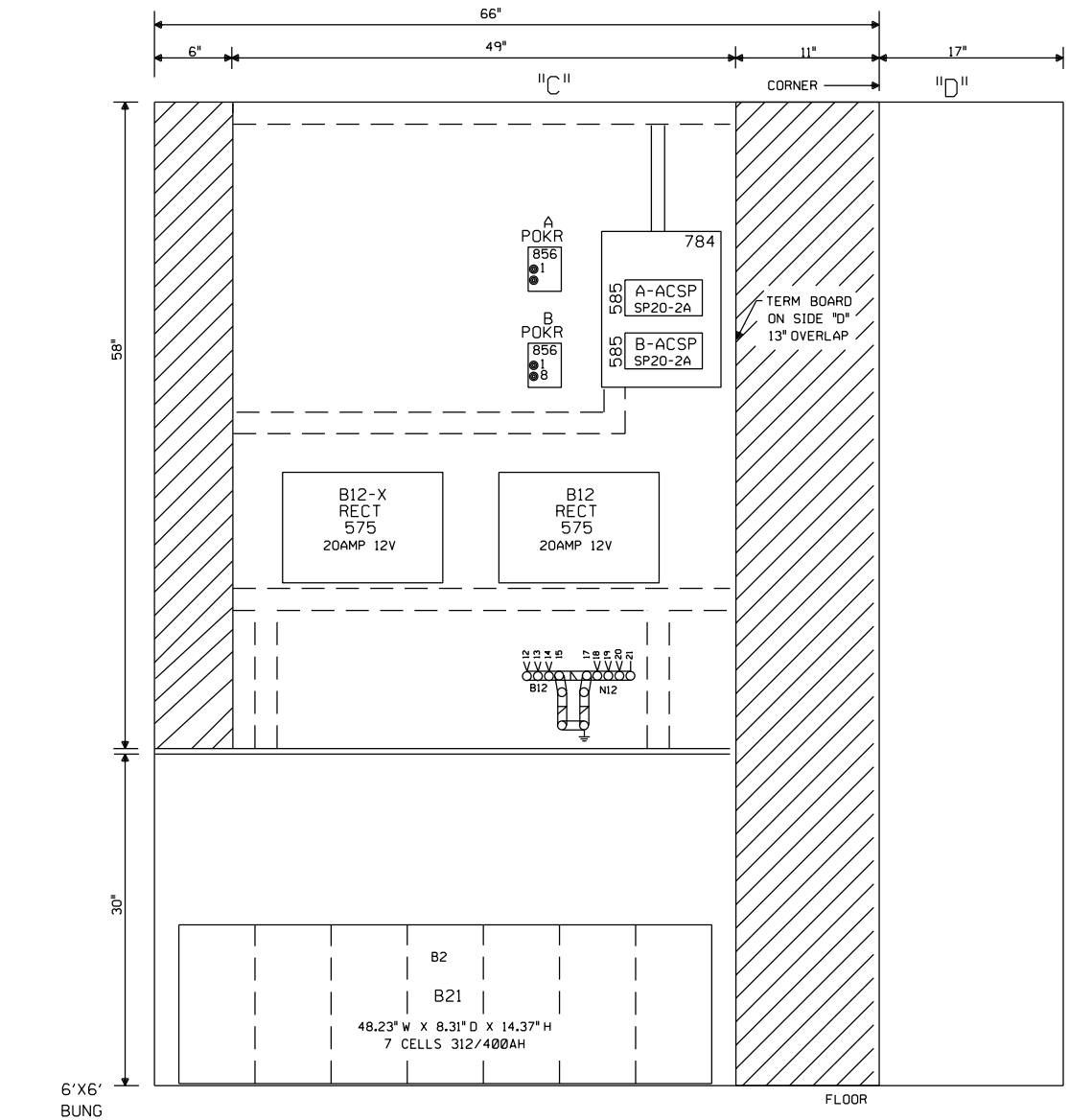

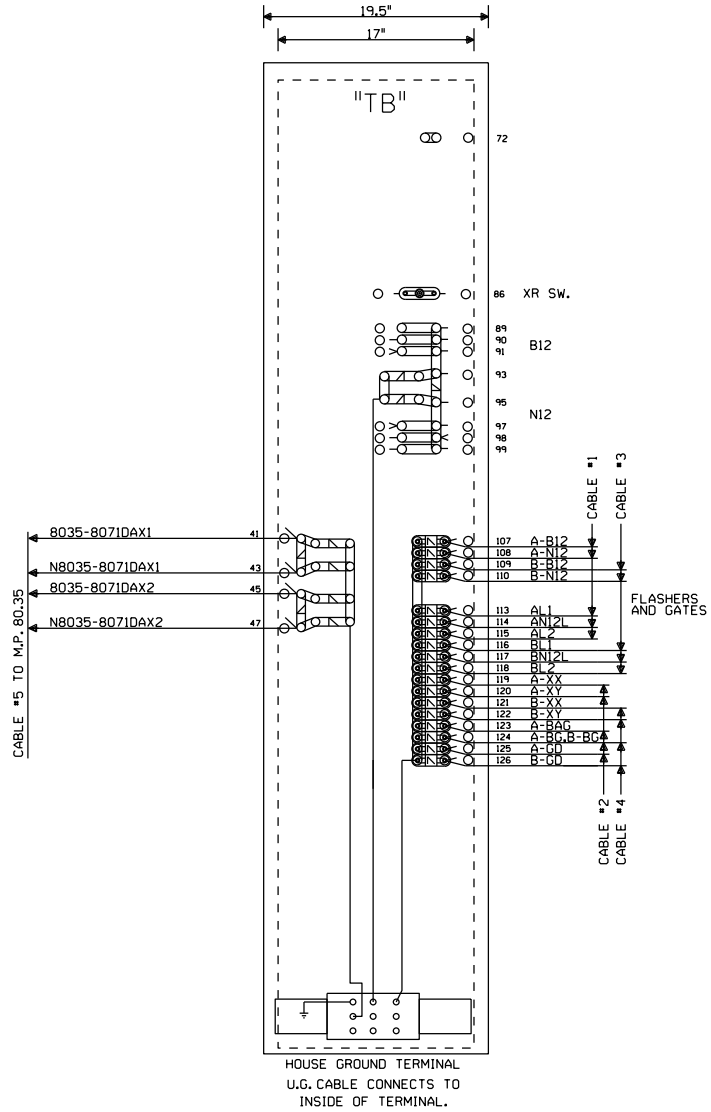

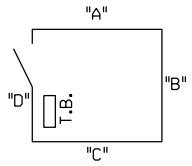

NOTE: NO TEST LINKS TO BE INSTALLED WITH CROSSING LIGHTING OR GATE MECH CIRCUITRY

NOTE: ALL DIMENSIONS SHOWN ARE APPROXIMATE.

NEW SHEET

Designed: 07/15/14
INSTALL GATES, FLASHERS AND CWT AT TR-221A, M.P. 80.71
Rec#: 154
WO#: 25083 /MRN /NST/JTB

MODIFICATION LEVEL	
O. A. LAST LEVEL CHECKED	DU
LAST LEVEL MOD THIS TYPICAL	DU
LAST LEVEL BY DESIGNER	DU
CHANGED FROM TYPICAL?	Y

REV 01.24.11 4K GFC.9

CIRCUIT MODIFICATIONS ARE NOT TO BE MADE WITHOUT AUTHORITY FROM THE OFFICE OF SIGNAL DESIGN

Date: 07/15/14
Des: NST
Chk: MRN
AFE: 25083

UNION PACIFIC RAILROAD
WOODLAND, ILLINOIS
TR-221A
VILLA GROVE SUBDIVISION
Office of AVP Engineering - Signal Omaha, Nebraska

Sh.: 8
DOT 167579M
MP: 80.71
ID: 03008071.8X

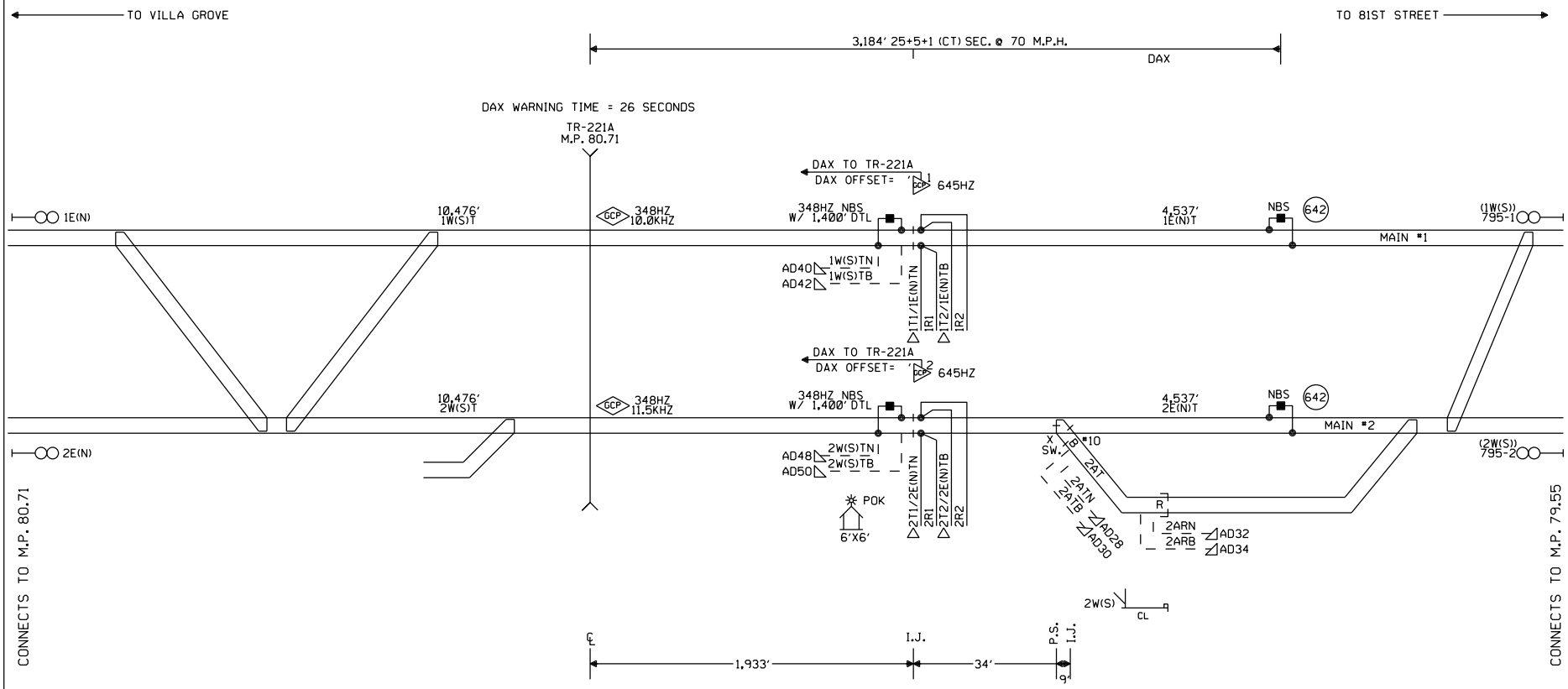

NOTES:

⊗ = TWISTED WIRES
ALL TRACK WIRES 2C. #6
INSULATED 1 TWIST PER FT.

TRANSMITTER AND RECEIVER LEADS TO BE SEPARATED BY AT LEAST 12" IN TRENCH, LENGTHS SHOULD NOT EXCEED MANUFACTURES RECOMMENDATION.

ALL BUNGALOW WIRING TO BE #16 AWG FLEX UNLESS OTHERWISE SPECIFIED EXCEPT ALL GROUND WIRE TO BE #6 AWG FLEX OR LARGER.

REFER TO UP STANDARD DWG. FOR BUNGALOW GROUNDING.

△ = ENSURE TRACK POLARITY IS TRANSPOSED ACROSS ALL INSULATED JOINTS.

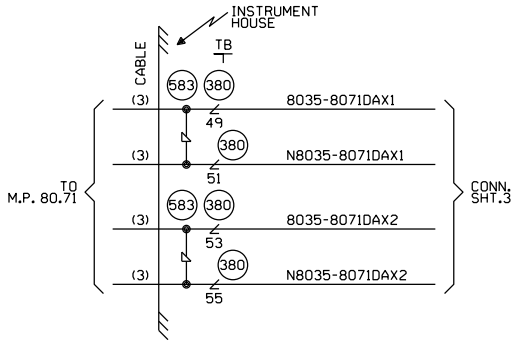

CONSTRUCTION NOTES:

1. NEW REMOTE GCP EQUIPMENT WILL BE INSTALLED IN EXISTING HOUSE.
2. THE EXISTING WAYSIDE TRACK CONNECTIONS AND CABLES #1 AND #2 WILL BE REUSED. ONLY THE RECEIVE TRACK WIRES AND CABLE #3 WILL BE INSTALLED NEW FOR THE NEW REMOTE GCP EQUIPMENT.

OFFSET AND ISLAND DISTANCES TO BE VERIFIED BY FIELD

W(S) ←—○—→ E(N)

CABLE TABULATION

CABLE #3 7C#14 U.G.B.T. HOUSE TO MP. 80.71

NEW SHEET

Designed: 07/15/14
INSTALL GATES, FLASHERS AND CWT AT TR-221A, M.P. 80.71
Rec'd: IS: WO#: 25083 /MRN /NST/JTB

MODIFICATION LEVEL	
D. A. LAST LEVEL CHECKED	DU
LAST LEVEL MOD THIS TYPICAL	DU
LAST LEVEL BY DESIGNER	DU
CHANGED FROM TYPICAL?	Y
rev 01.24.11 4K REMOTE.1	

CIRCUIT MODIFICATIONS ARE NOT TO BE MADE WITHOUT AUTHORITY FROM THE OFFICE OF SIGNAL DESIGN

Date: 07/15/14
Des: NST
Chk: MRN
AFE: 25083

UNION PACIFIC RAILROAD

TWO TRACK REPEATER
VILLA GROVE SUBDIVISION

Office of AVP Engineering - Signal Omaha, Nebraska

Sh.: 1
MP: 80.35
ID: 03008035.IX

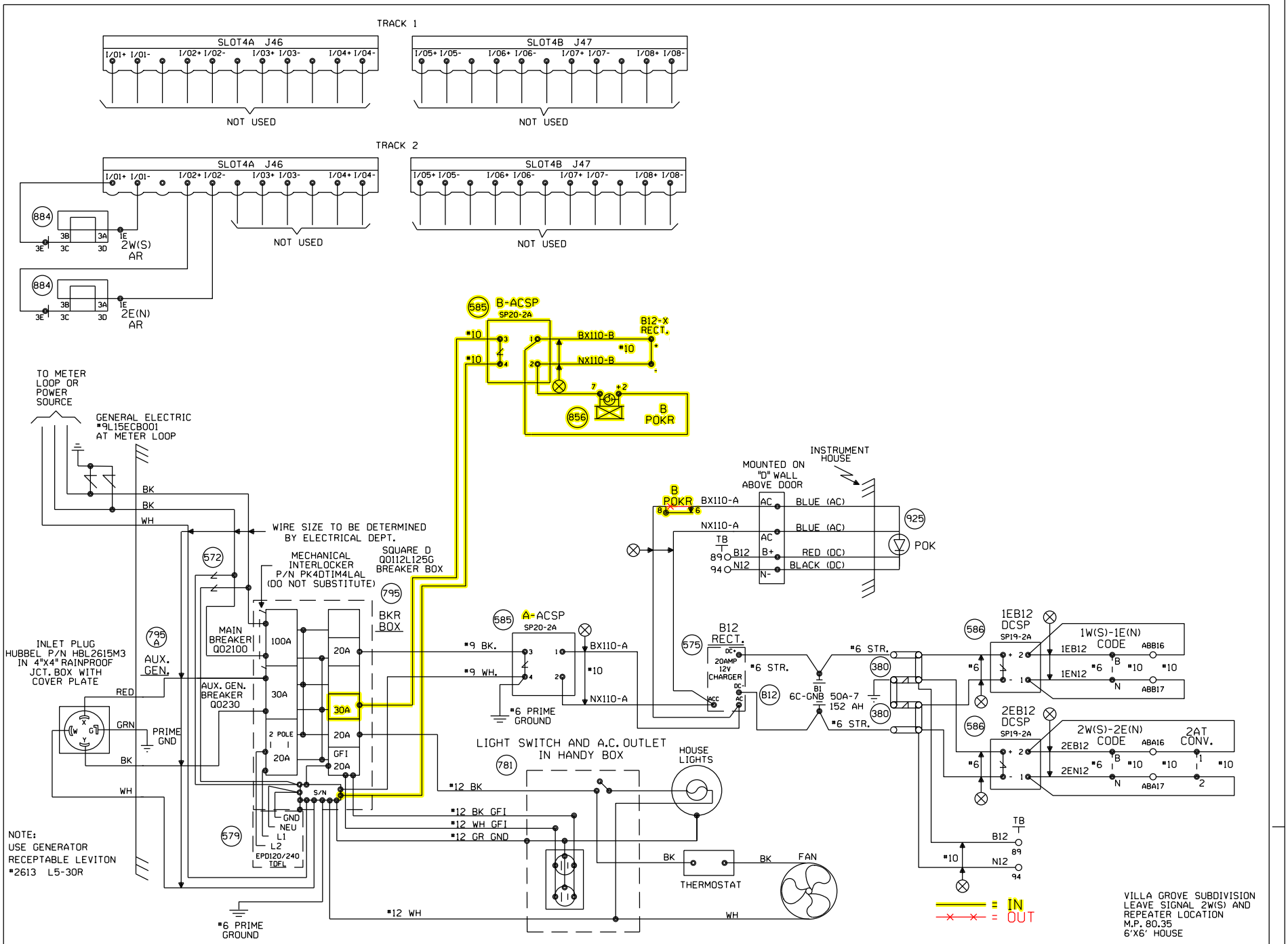

				Designed: 07/15/14 INSTALL GATES, FLASHERS AND CWT AT TR-221A, M.P. 80.71 Rec#: IS: WO#: 25083 /MRN /NST/JTB	Revised: 04-12-10 INSTALLED EC5 BETWEEN WATSEKA & WOODLAND JCT. M.P. 77.45 TO M.P. 82.40. Rec#: 16757 WO#: 56908 IS: 02-13-10 /JJL TLB/WIT/CTC/MDF	MODIFICATION LEVEL Q. A. LAST LEVEL CHECKED DM LAST LEVEL MOD THIS TYPICAL DM LAST LEVEL BY DESIGNER DO CHANGED FROM TYPICAL? Y REV 02.01.06 1TE51NTC.2	CIRCUIT MODIFICATIONS ARE NOT TO BE MADE WITHOUT AUTHORITY FROM THE OFFICE OF SIGNAL DESIGN	DES: CTC DIG: CTC CHK: JJL A.F.E. 56908 ID: 03008035.2S	UNION PACIFIC RAILROAD 81ST STREET, IL TO VILLA GROVE, IL C.T.C. CIRCUITS Office of Sr.AVP Engineering - Signal/TCO Omaha, Nebraska	DATE 07-19-06 SHEET 2 DWG 80.35 S-300

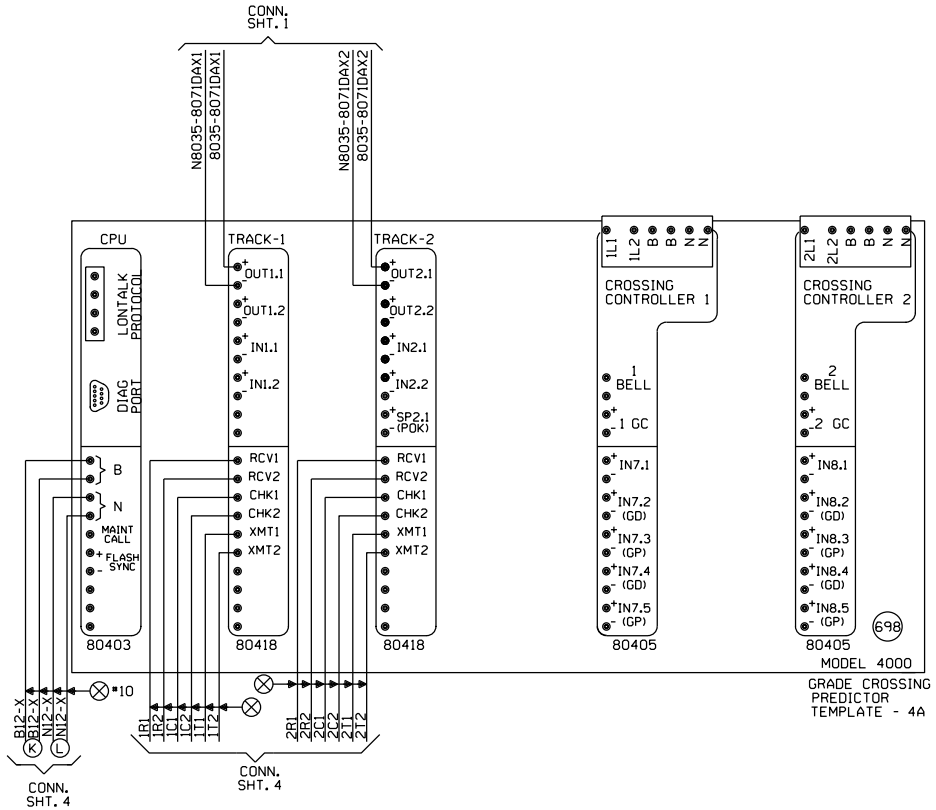

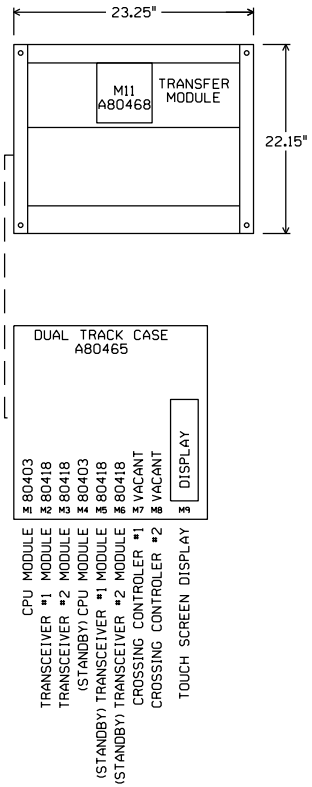

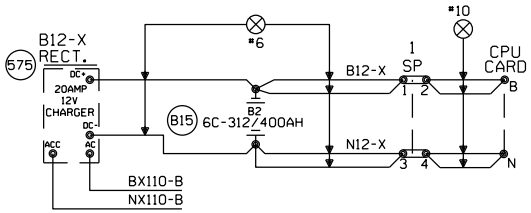

"Mf" FREQUENCY (HZ)	MAXIMUM TRANSMIT WIRE LENGTH (FEET)
86	100
114	125
156	150
211	200
285-970	250

NOTE:
EACH TRANSMITTER TO RAIL WIRE FROM XMT1 AND XMT2 MUST NOT EXCEED THE MAXIMUM LENGTH SPECIFIED IN THE TABLE SHOWN. THE RECEIVER WIRE LENGTH IS NOT CRITICAL. DOES NOT APPLY TO 6 TRACK WIRE APPLICATION.

NEW SHEET

Designed: 07/15/14
INSTALL GATES, FLASHERS AND CWT AT TR-221A, M.P. 80.71
Rec#: WO#: 25083
IS: /MRN
/NST/JTB

MODIFICATION LEVEL	
D. A. LAST LEVEL CHECKED	DU
LAST LEVEL MOD THIS TYPICAL	DU
LAST LEVEL BY DESIGNER	DU
CHANGED FROM TYPICAL?	Y

REV 01.24.11 4K 2TKGF.3

CIRCUIT MODIFICATIONS ARE NOT TO BE MADE WITHOUT AUTHORITY FROM THE OFFICE OF SIGNAL DESIGN

Date: 07/15/14
Des: NST
Chk: MRN
AFE: 25083

UNION PACIFIC RAILROAD

TWO TRACK REPEATER
VILLA GROVE SUBDIVISION

Office of AVP Engineering - Signal Omaha, Nebraska

Sh.: 3
MP: 80.35
ID: 03008035.3X

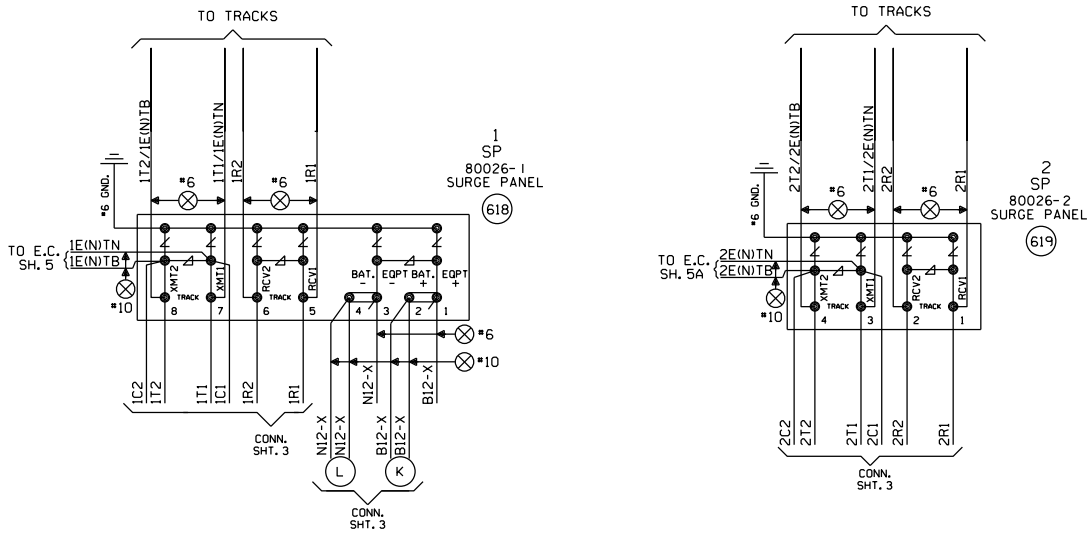

NEW SHEET

					Designed: 07/15/14 INSTALL GATES, FLASHERS AND CWT AT TR-221A, M.P. 80.71 Rec#: IS: WO#: 25083 /MRN /NST/JTB	MODIFICATION LEVEL		CIRCUIT MODIFICATIONS ARE NOT TO BE MADE WITHOUT AUTHORITY FROM THE OFFICE OF SIGNAL DESIGN	Date: 07/15/14 Des: NST Chk: MRN AFE: 25083	UNION PACIFIC RAILROAD TWO TRACK REPEATER VILLA GROVE SUBDIVISION Office of AVP Engineering - Signal Omaha, Nebraska	Sh.: 4 MP: 80.35 ID: 03008035.4X
						O. A. LAST LEVEL CHECKED	DU				
						LAST LEVEL MOD THIS TYPICAL	DU				
						LAST LEVEL BY DESIGNER	DU				
						CHANGED FROM TYPICAL? REV 01.24.11 4K REMOTE.4	Y				

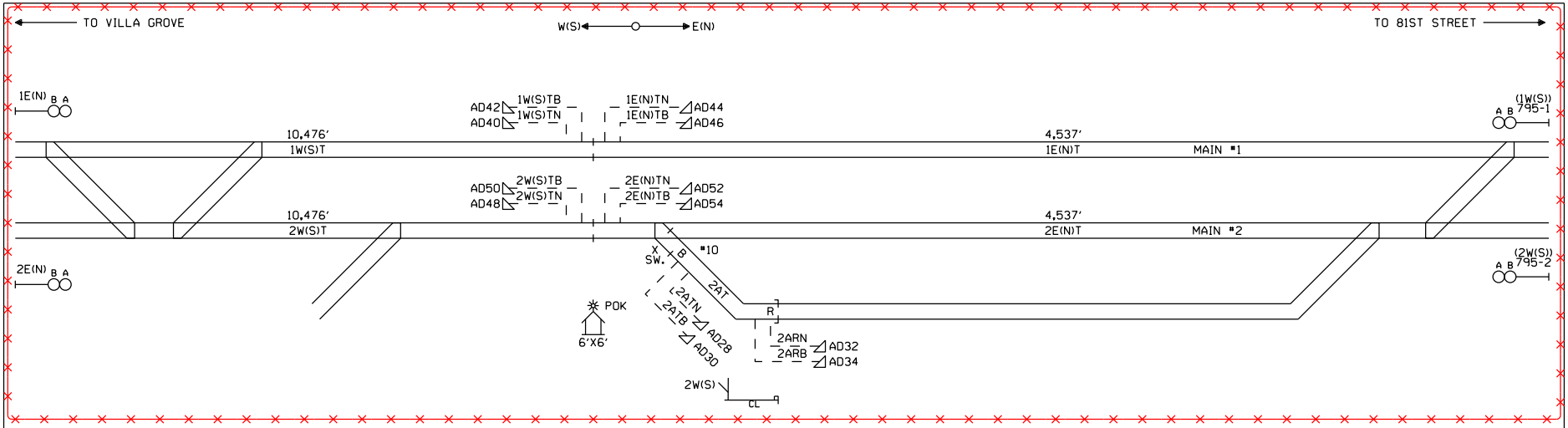

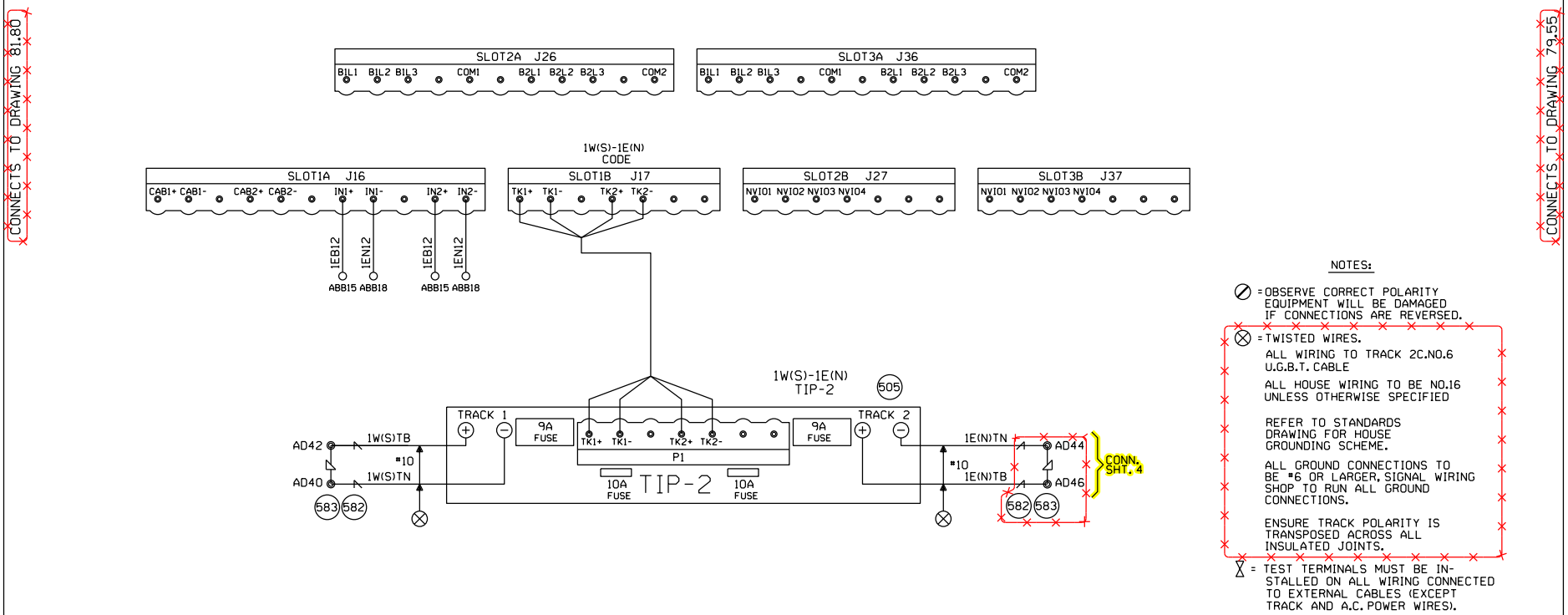

NOTES:

⊘ = OBSERVE CORRECT POLARITY EQUIPMENT WILL BE DAMAGED IF CONNECTIONS ARE REVERSED.

⊗ = TWISTED WIRES.

ALL WIRING TO TRACK 2C.NO.6 U.G.B.T. CABLE

ALL HOUSE WIRING TO BE NO.16 UNLESS OTHERWISE SPECIFIED

REFER TO STANDARDS DRAWING FOR HOUSE GROUNDING SCHEME.

ALL GROUND CONNECTIONS TO BE #6 OR LARGER, SIGNAL WIRING SHOP TO RUN ALL GROUND CONNECTIONS.

ENSURE TRACK POLARITY IS TRANSPOSED ACROSS ALL INSULATED JOINTS.

⊠ = TEST TERMINALS MUST BE INSTALLED ON ALL WIRING CONNECTED TO EXTERNAL CABLES (EXCEPT TRACK AND A.C. POWER WIRES).

CABLE TABULATION

CABLE NO.1-7C.NO.14 U.G.B.T. HOUSE TO SW. JCT. BOX.
CABLE NO.2-5C.NO.6 U.G.B.T. HOUSE TO SIGNAL 2W(S).

= IN
= OUT

VILLA GROVE SUBDIVISION
LEAVE SIGNAL 2W(S) AND
REPEATER LOCATION
M.P. 80.35
6'X6' HOUSE

Designed: 07/15/14
INSTALL GATES, FLASHERS AND CWT AT TR-221A, M.P. 80.71
Rec*: WO*: 25083 /MRN
IS: /NST/JTB

Revised: 04-12-10
INSTALLED EC5 BETWEEN WATSEKA & WOODLAND JCT. M.P. 77.45 TO M.P. 82.40.
Rec*: 16757 WO*: 56908 /JJL
IS: 02-13-10 TLB/WIT/CTC/MDF

Revised: 03-22-10
INSTALLED EC5 BETWEEN WOODLAND JCT. & GOODWINE M.P. 82.43 TO M.P. 95.00 PHASE I.
Rec*: 16659 WO*: 56906 /MWK
IS: 02-12-10 TLB/WIT/CTC/RCB

MODIFICATION LEVEL	
D. A. LAST LEVEL CHECKED	DM
LAST LEVEL MOD THIS TYPICAL	DM
LAST LEVEL BY DESIGNER	DO
CHANGED FROM TYPICAL?	Y

REV 02.01.06 1TE51NTC.1

CIRCUIT MODIFICATIONS ARE NOT TO BE MADE WITHOUT AUTHORITY FROM THE OFFICE OF SIGNAL DESIGN

DES: CTC
DIG: CTC
CHK: JJL
A.F.E. 56908
ID: 03008035.1S
03008035.5S

UNION PACIFIC RAILROAD

81ST STREET, IL TO
VILLA GROVE, IL
C.T.C. CIRCUITS

Office of Sr.AVP Engineering - Signal/TCO Omaha, Nebraska

DATE 07-19-06
SHEET 1 of 5
DWG 80.35
S-300

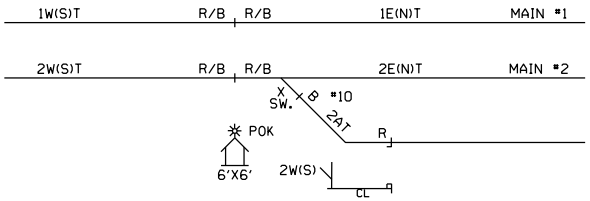

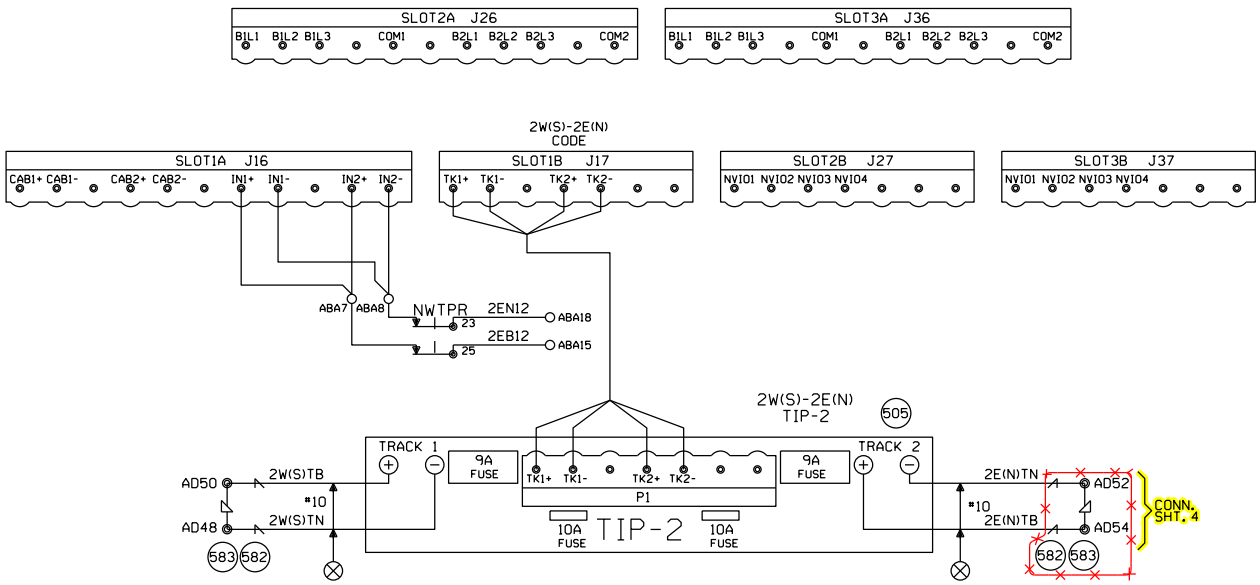

NOTES:

⊘ = OBSERVE CORRECT POLARITY EQUIPMENT WILL BE DAMAGED IF CONNECTIONS ARE REVERSED.

⊗ = TWISTED WIRES.

ALL WIRING TO TRACK 2C.NO.6 U.G.B.T. CABLE

ALL HOUSE WIRING TO BE NO.16 UNLESS OTHERWISE SPECIFIED

REFER TO STANDARDS DRAWING FOR HOUSE GROUNDING SCHEME.

ALL GROUND CONNECTIONS TO BE #6 OR LARGER, SIGNAL WIRING SHOP TO RUN ALL GROUND CONNECTIONS.

ENSURE TRACK POLARITY IS TRANSPOSED ACROSS ALL INSULATED JOINTS.

⧖ = TEST TERMINALS MUST BE INSTALLED ON ALL WIRING CONNECTED TO EXTERNAL CABLES (EXCEPT TRACK AND A.C. POWER WIRES).

= IN
= OUT

VILLA GROVE SUBDIVISION
LEAVE SIGNAL 2W(S) AND REPEATER LOCATION
M.P. 80.35
6'X6' HOUSE

				Designed: 07/15/14 INSTALL GATES, FLASHERS AND CWT AT TR-221A, M.P. 80.71 Rec#: WO#: 25083 IS: /MRN /NST/JTB	Revised: 04-12-10 INSTALLED EC5 BETWEEN WATSEKA & WOODLAND JCT. M.P. 77.45 TO M.P. 82.40. Rec#: 16757 WO#: 56908 IS: 02-13-10 /JJL TLB/WIT/CTC/MDF	MODIFICATION LEVEL Q. A. LAST LEVEL CHECKED — DM LAST LEVEL MOD THIS TYPICAL — DM LAST LEVEL BY DESIGNER — DO CHANGED FROM TYPICAL? — Y REV 02.01.06 1TE51NTC.1	CIRCUIT MODIFICATIONS ARE NOT TO BE MADE WITHOUT AUTHORITY FROM THE OFFICE OF SIGNAL DESIGN	DES: CTC DIG: CTC CHK: JJL A.F.E. 56908 ID: 03008035.1A 03008035.5AS	UNION PACIFIC RAILROAD 81ST STREET, IL TO VILLA GROVE, IL C.T.C. CIRCUITS Office of Sr.AVP Engineering - Signal/TCO Omaha, Nebraska	DATE 07-19-06 SHEET 1A 5A DWG 80.35 S-300

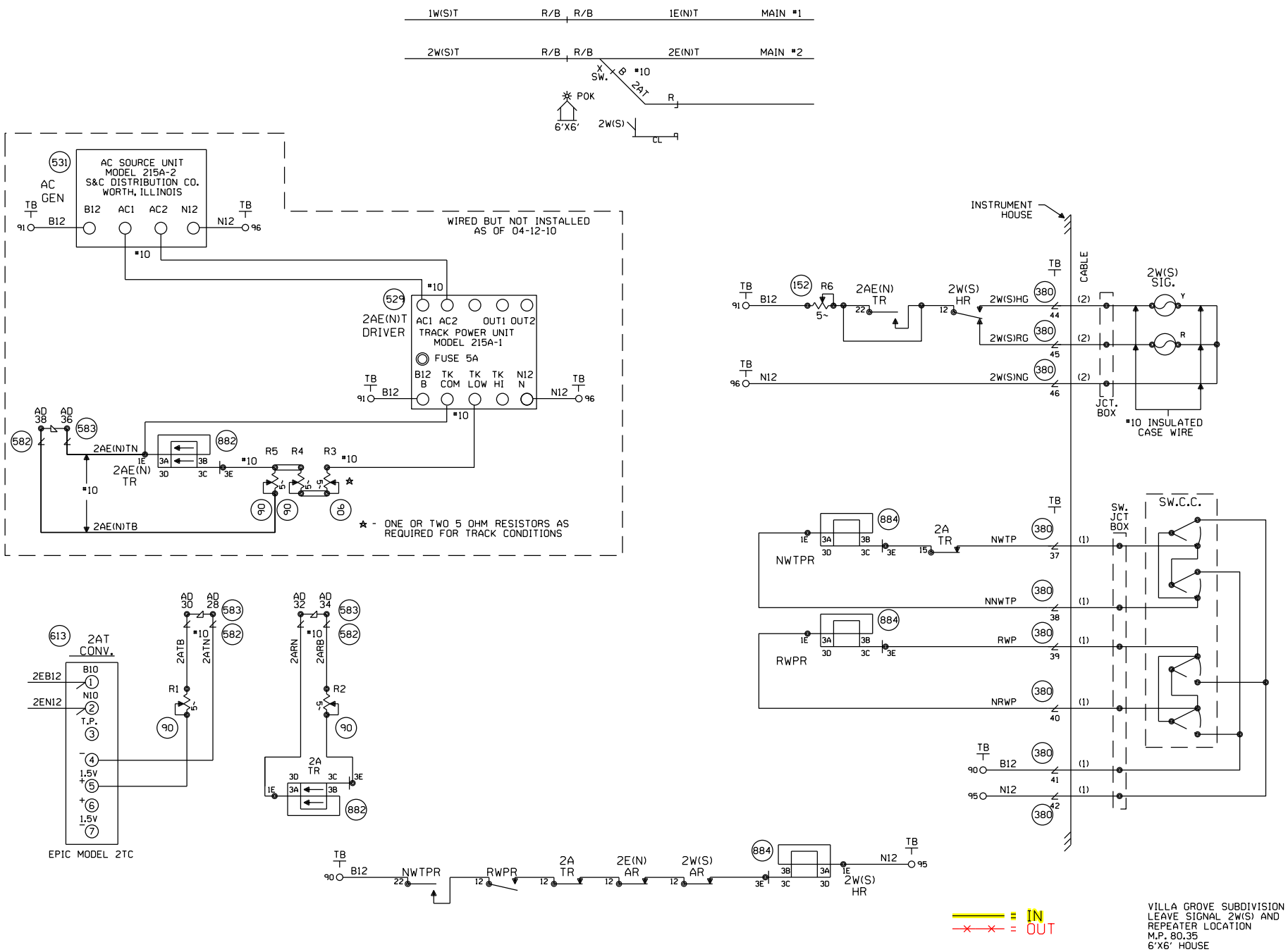

VILLA GROVE SUBDIVISION
LEAVE SIGNAL 2W(S) AND
REPEATER LOCATION
M.P. 80.35
6'X6' HOUSE

Designed: 07/15/14 INSTALL GATES, FLASHERS AND CWT AT TR-221A, M.P. 80.71 Rec#: WO#: 25083 IS: /MRN /NST/JTB	Revised: 04-12-10 INSTALLED EC5 BETWEEN WATSEKA & WOODLAND JCT. M.P. 77.45 TO M.P. 82.40. Rec#: 16757 WO#: 56908 IS: 02-13-10 /JJL TLB/WIT/CTC/MDF	MODIFICATION LEVEL Q. A. LAST LEVEL CHECKED LAST LEVEL MOD THIS TYPICAL LAST LEVEL BY DESIGNER CHANGED FROM TYPICAL? REV 09.01.06 4K ACDCFL.4	DO DO DO Y	CIRCUIT MODIFICATIONS ARE NOT TO BE MADE WITHOUT AUTHORITY FROM THE OFFICE OF SIGNAL DESIGN	DES: CTC DIG: CTC CHK: JJL A.F.E. 56908 ID: 03008035.3S 03008035.6S	UNION PACIFIC RAILROAD 81ST STREET, IL TO VILLA GROVE, IL C.T.C. CIRCUITS Office of Sr.AVP Engineering - Signal/TCO Omaha, Nebraska	DATE 07-19-06 SHEET 3 6 DWG 80.35 S-300

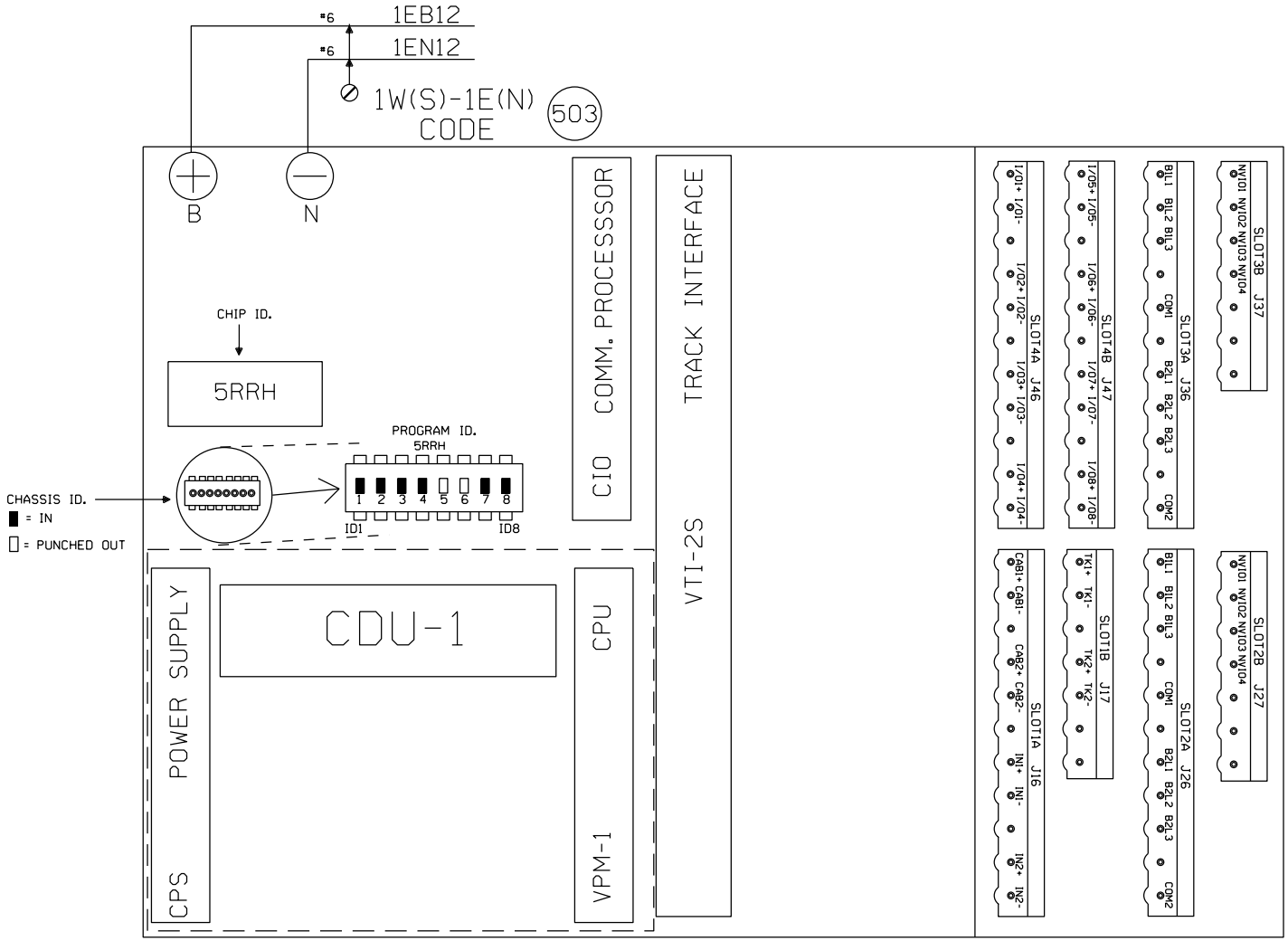

CODE 5
OPERATION SETTINGS

L	ALT-5	FALSE
R	ALT-5	FALSE

= IN
= OUT

VILLA GROVE SUBDIVISION
LEAVE SIGNAL 2W(S) AND
REPEATER LOCATION
M.P. 80.35
6'X6' HOUSE

Designed: 07/15/14
INSTALL GATES, FLASHERS AND CWT AT TR-221A, M.P. 80.71
Rec#: IS: WO#: 25083 /MRN /NST/JTB

Revised: 04-12-10
INSTALLED EC5 BETWEEN WATSEKA & WOODLAND JCT. M.P. 77.45 TO M.P. 82.40.
Rec#: 16757 WO#: 56908 IS: 02-13-10 /JJL
TLB/WIT/CTC/MDF
REV 02.01.06 1TESINTC.3

MODIFICATION LEVEL	
D.A. LAST LEVEL CHECKED	DM
LAST LEVEL MOD THIS TYPICAL	DM
LAST LEVEL BY DESIGNER	DO
CHANGED FROM TYPICAL?	Y

CIRCUIT MODIFICATIONS ARE NOT TO BE MADE WITHOUT AUTHORITY FROM THE OFFICE OF SIGNAL DESIGN

DES: CTC
DIG: CTC
CHK: JJL
A.F.E. 56908
ID: ~~03008035.4S~~ 03008035.7S

UNION PACIFIC RAILROAD
81ST STREET, IL TO
VILLA GROVE, IL
C.T.C. CIRCUITS
Office of Sr.AVP Engineering - Signal/TCO Omaha, Nebraska

DATE 07-19-06
SHEET ~~4~~ 7
DWG 80.35
S-300

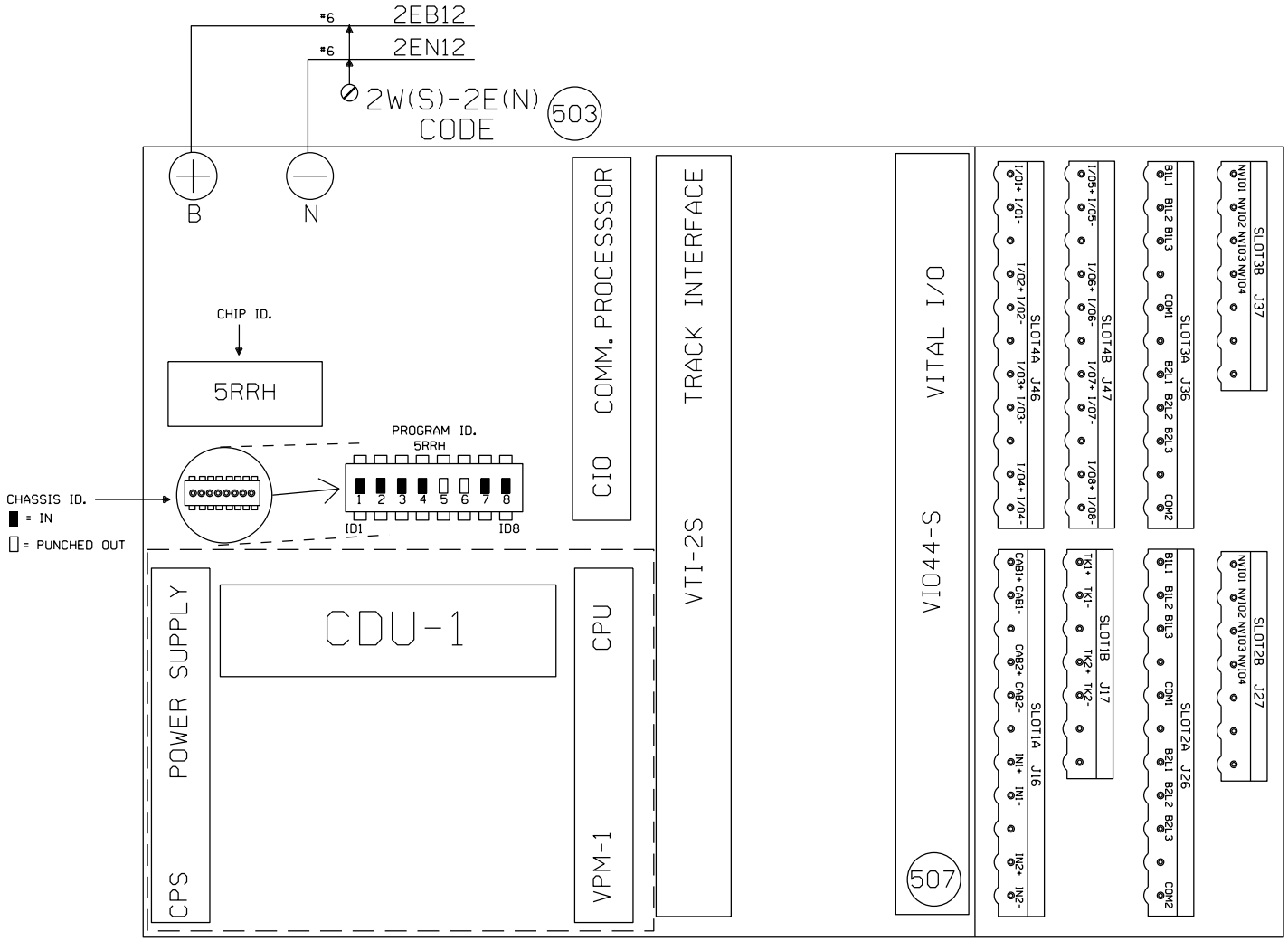

CODE 5
OPERATION SETTINGS

L	ALT-5	FALSE
R	ALT-5	FALSE

= IN
= OUT

VILLA GROVE SUBDIVISION
LEAVE SIGNAL 2W(S) AND
REPEATER LOCATION
M.P. 80.35
6'X6' HOUSE

Designed: 07/15/14
INSTALL GATES, FLASHERS AND CWT AT TR-221A, M.P. 80.71
Rec#: 15; WO#: 25083 /MRN /NST/JTB

Revised: 04-12-10
INSTALLED EC5 BETWEEN WATSEKA & WOODLAND JCT. M.P. 77.45 TO M.P. 82.40.
Rec#: 16757 WO#: 56908 IS: 02-13-10 /JJL TLB/WIT/CTC/MDF

MODIFICATION LEVEL	
D.A. LAST LEVEL CHECKED	DM
LAST LEVEL MOD THIS TYPICAL	DM
LAST LEVEL BY DESIGNER	DO
CHANGED FROM TYPICAL?	Y

REV 02.01.06 1TE51NTC.3

CIRCUIT MODIFICATIONS ARE NOT TO BE MADE WITHOUT AUTHORITY FROM THE OFFICE OF SIGNAL DESIGN

DES: CTC
DIG: CTC
CHK: JJL
A.F.E. 56908
ID= ~~03008035.4AS~~ 03008035.7AS

UNION PACIFIC RAILROAD
81ST STREET, IL TO
VILLA GROVE, IL
C.T.C. CIRCUITS
Office of Sr.AVP Engineering - Signal/TCO Omaha, Nebraska

DATE 07-19-06
SHEET ~~4A~~ 7A
DWG 80.35
S-300

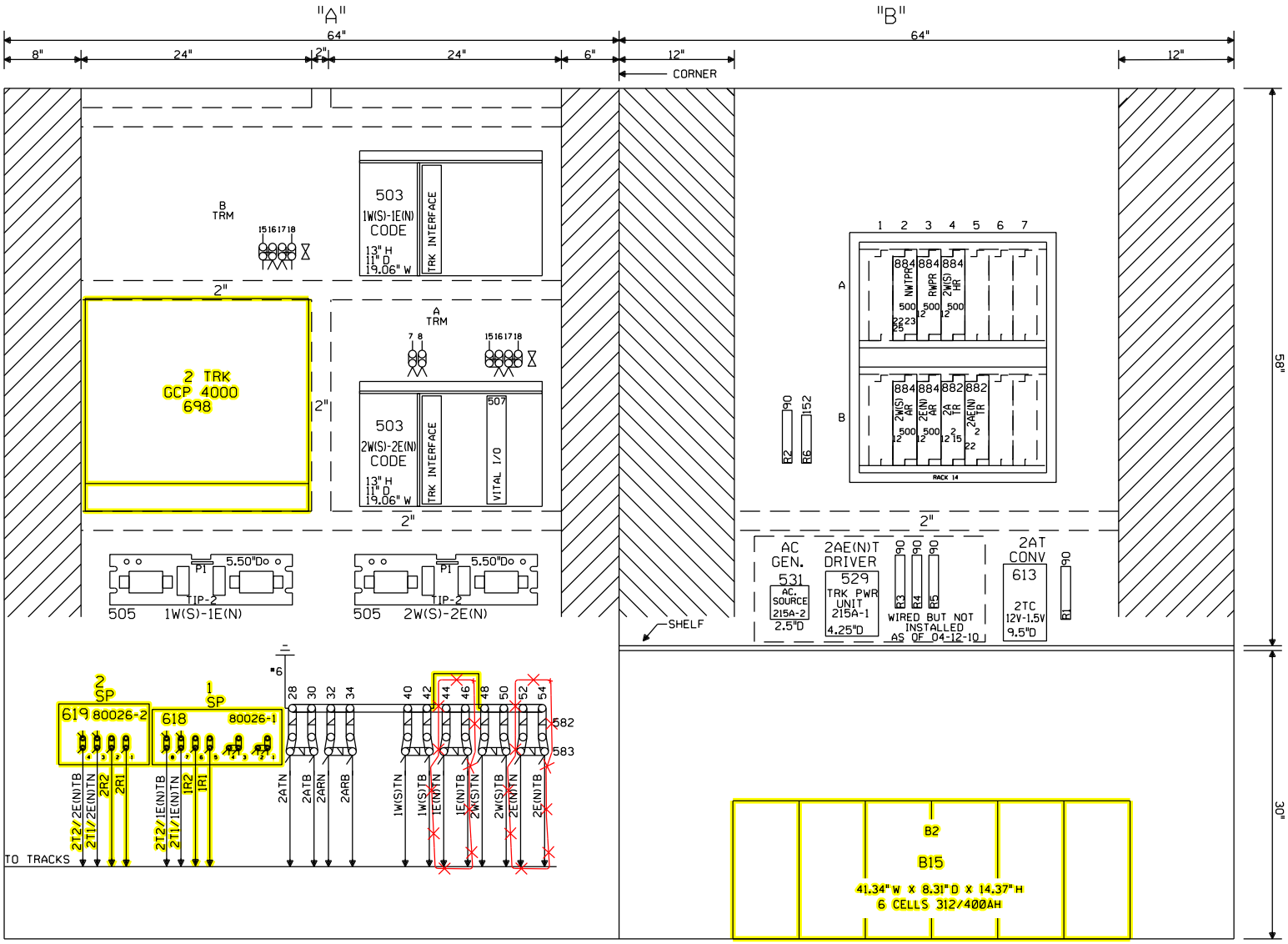

NOTE:

WAYSIDE TRACK CONNECTIONS ARE EXISTING. RECEIVE LEADS FOR REMOTE GCP EQUIPMENT ARE NEW.

= IN
= OUT

VILLA GROVE SUBDIVISION
LEAVE SIGNAL 2W(S) AND REPEATER LOCATION
M.P. 80.35
6'X6' HOUSE

Designed: 07/15/14
INSTALL GATES, FLASHERS AND CWT AT TR-221A, M.P. 80.71
Rec#: 15: WO#: 25083 /MRN /NST/JTB

Revised: 04-12-10
INSTALLED EC5 BETWEEN WATSEKA & WOODLAND JCT. M.P. 77.45 TO M.P. 82.40.
Rec#: 16757 WO#: 56908
IS: 02-13-10 /JJL
TLB/WIT/CTC/MDF

MODIFICATION LEVEL	
O.A. LAST LEVEL CHECKED	DD
LAST LEVEL MOD THIS TYPICAL	DG
LAST LEVEL BY DESIGNER	DO
CHANGED FROM TYPICAL?	Y

rev 6/5/03 2TE5HOLD.5

CIRCUIT MODIFICATIONS ARE NOT TO BE MADE WITHOUT AUTHORITY FROM THE OFFICE OF SIGNAL DESIGN

DES: CTC
DIG: CTC
CHK: JJL
A.F.E. 56908
ID: ~~03008035.5S~~ 03008035.8S

UNION PACIFIC RAILROAD

81ST STREET, IL TO VILLA GROVE, IL
C.T.C. CIRCUITS

Office of Sr.AVP Engineering - Signal/TCO Omaha, Nebraska

DATE 07-19-06
SHEET ~~5~~ 8
DWG 80.35
S-300

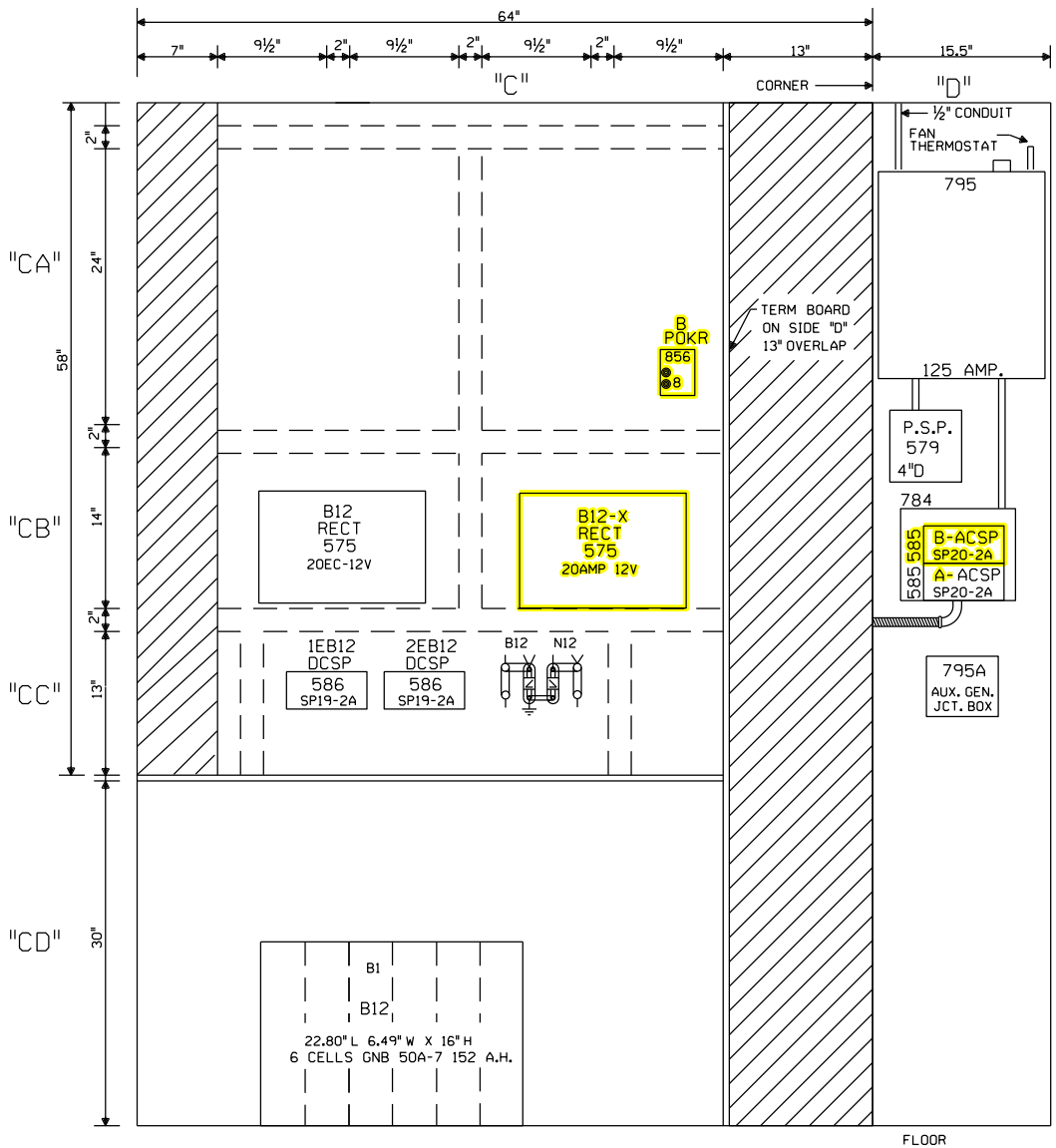

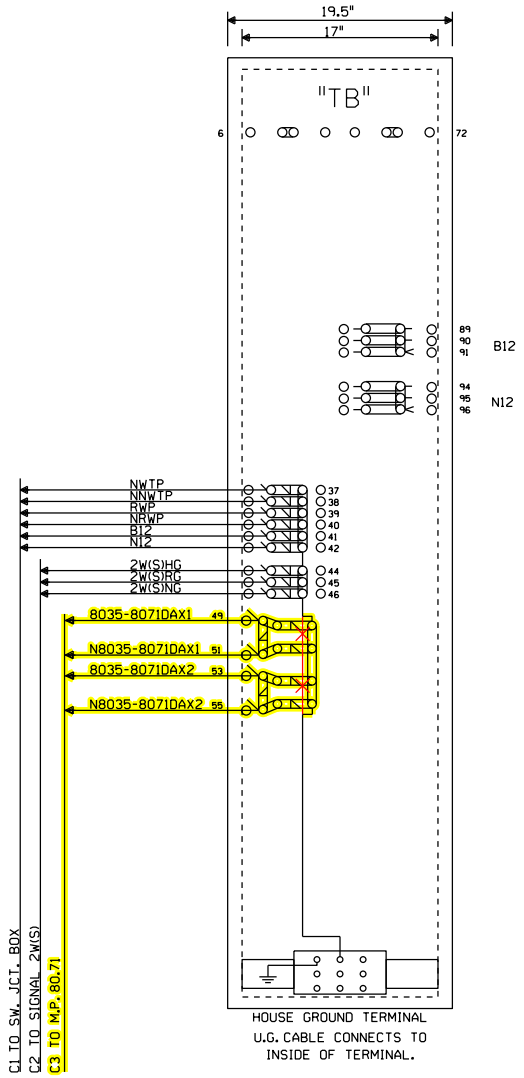

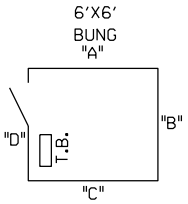

= IN
= OUT

VILLA GROVE SUBDIVISION
LEAVE SIGNAL 2W(S) AND
REPEATER LOCATION
M.P. 80.35
6'X6' HOUSE

Designed: 07/15/14	INSTALL GATES, FLASHERS AND CWT AT TR-221A, M.P. 80.71	Rec#: 15:	WO#: 25083 /MRN /NST/JTB
Revised: 04-12-10	INSTALLED EC5 BETWEEN WATSEKA & WOODLAND JCT. M.P. 77.45 TO M.P. 82.40.	Rec#: 16757 15: 02-13-10	WO#: 56908 /JJL TLB/WIT/CTC/MDF

MODIFICATION LEVEL	
O.A. LAST LEVEL CHECKED	DD
LAST LEVEL MOD THIS TYPICAL	DF
LAST LEVEL BY DESIGNER	DO
CHANGED FROM TYPICAL?	Y

rev 5/8/03 2TE5HOLD.6

CIRCUIT MODIFICATIONS ARE NOT TO BE MADE WITHOUT AUTHORITY FROM THE OFFICE OF SIGNAL DESIGN

DES: CTC
DIG: CTC
CHK: JJL
A.F.E. 56908
ID: ~~03008035.89~~ 03008035.95

UNION PACIFIC RAILROAD

81ST STREET, IL TO
VILLA GROVE, IL
C.T.C. CIRCUITS

Office of Sr.AVP Engineering - Signal/TCO Omaha, Nebraska

DATE 07-19-06
SHEET ~~6~~ 9
DWG 80.35
S-300