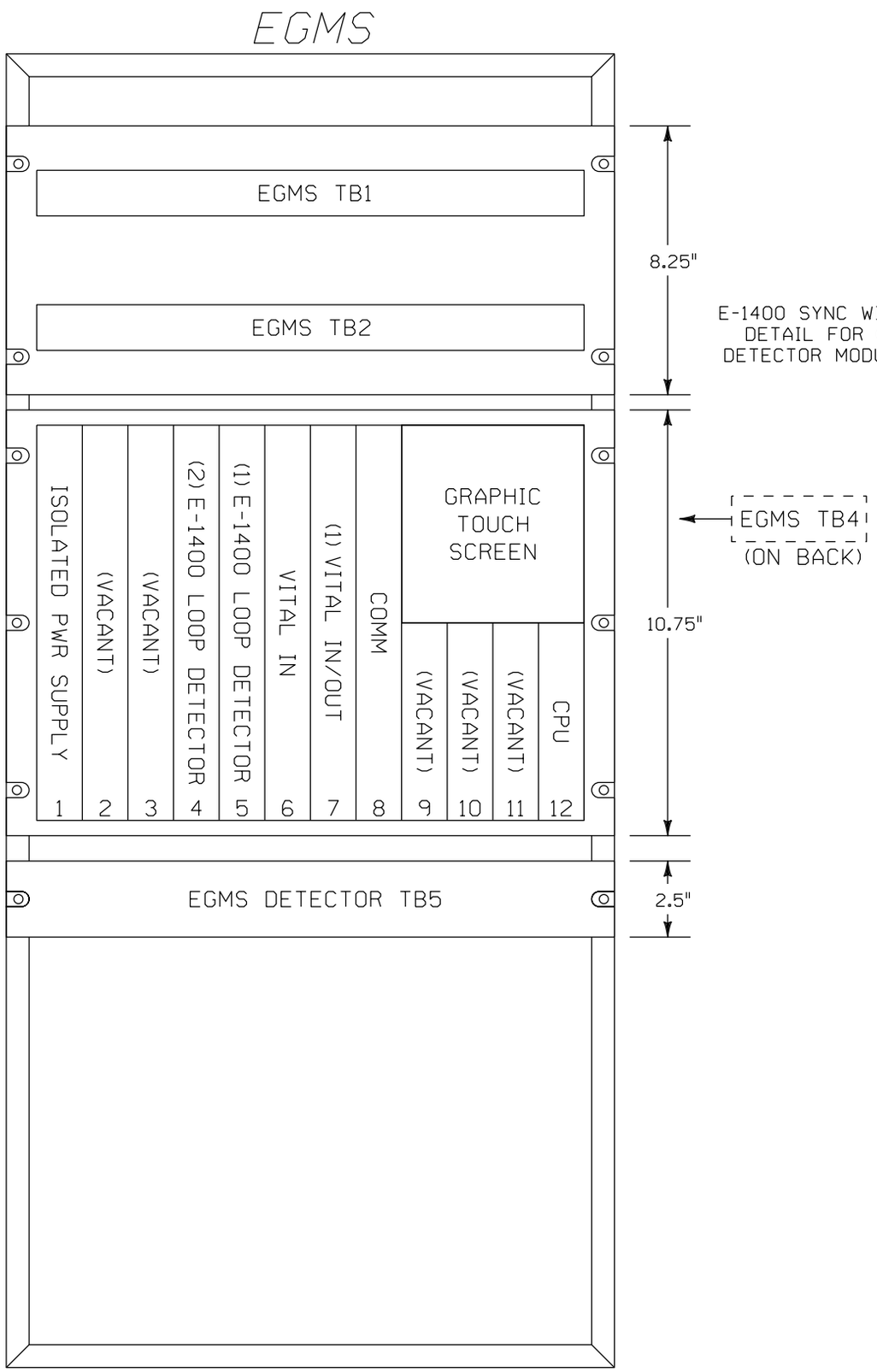

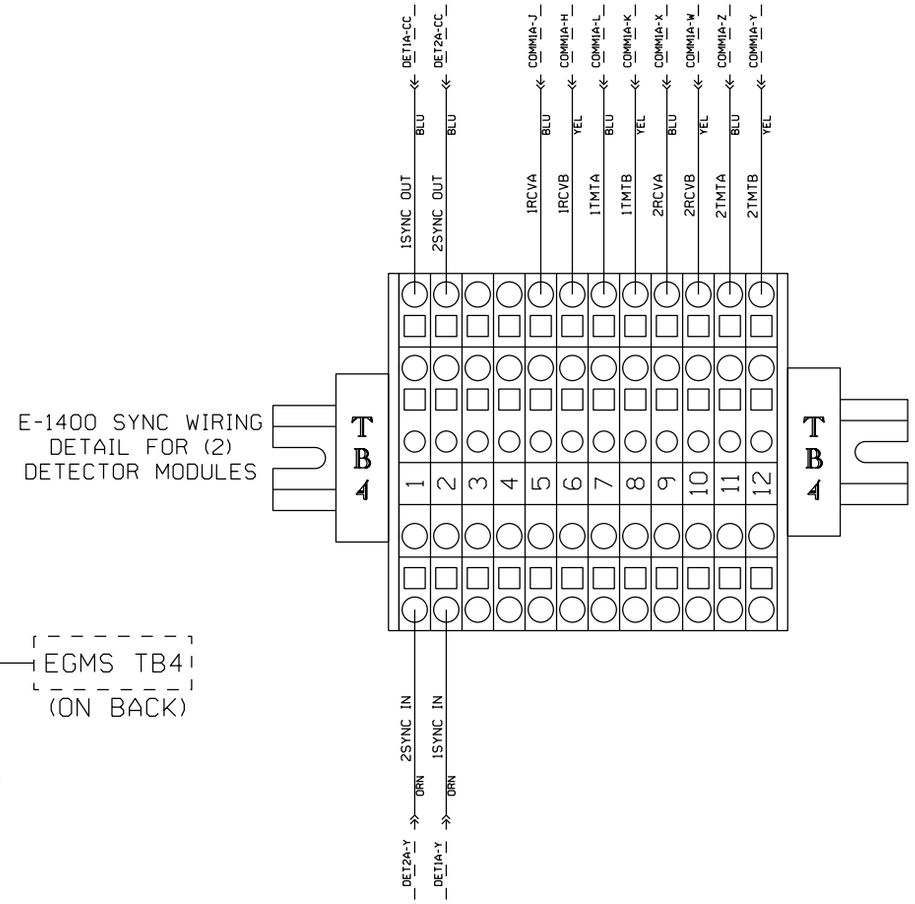

NEW SHEET

Designed: 3/09/12 TIER 3 PHASE 1 M.P.202.30 TO M.P.194.80 UPGRADE XINGS TO 4 QUAD WITH EGMS, VARIOUS CP'S Rec#: WO#: 14052 IS: MWK/ / /NST/MJF	MODIFICATION LEVEL		CIRCUIT MODIFICATIONS ARE NOT TO BE MADE WITHOUT AUTHORITY FROM THE OFFICE OF SIGNAL DESIGN	Date: 03/09/12	UNION PACIFIC RAILROAD	Sh.: 8D
	Q.A. LAST LEVEL CHECKED	DU		Des: NST	AUBURN, ILLINOIS	DOT 294342L
	LAST LEVEL MOD THIS TYPICAL	DU		Chk: MWK	NARMONT ROAD	MP: 199.68
	LAST LEVEL BY DESIGNER	DU		AFE: 14052	SPRINGFIELD SUBDIVISION	ID: CSL19968.8DX
	CHANGED FROM TYPICAL? REV 01.24.11 4K 2TKEGMS.9B	Y			Office of AVP Engineering - Signal Omaha, Nebraska	

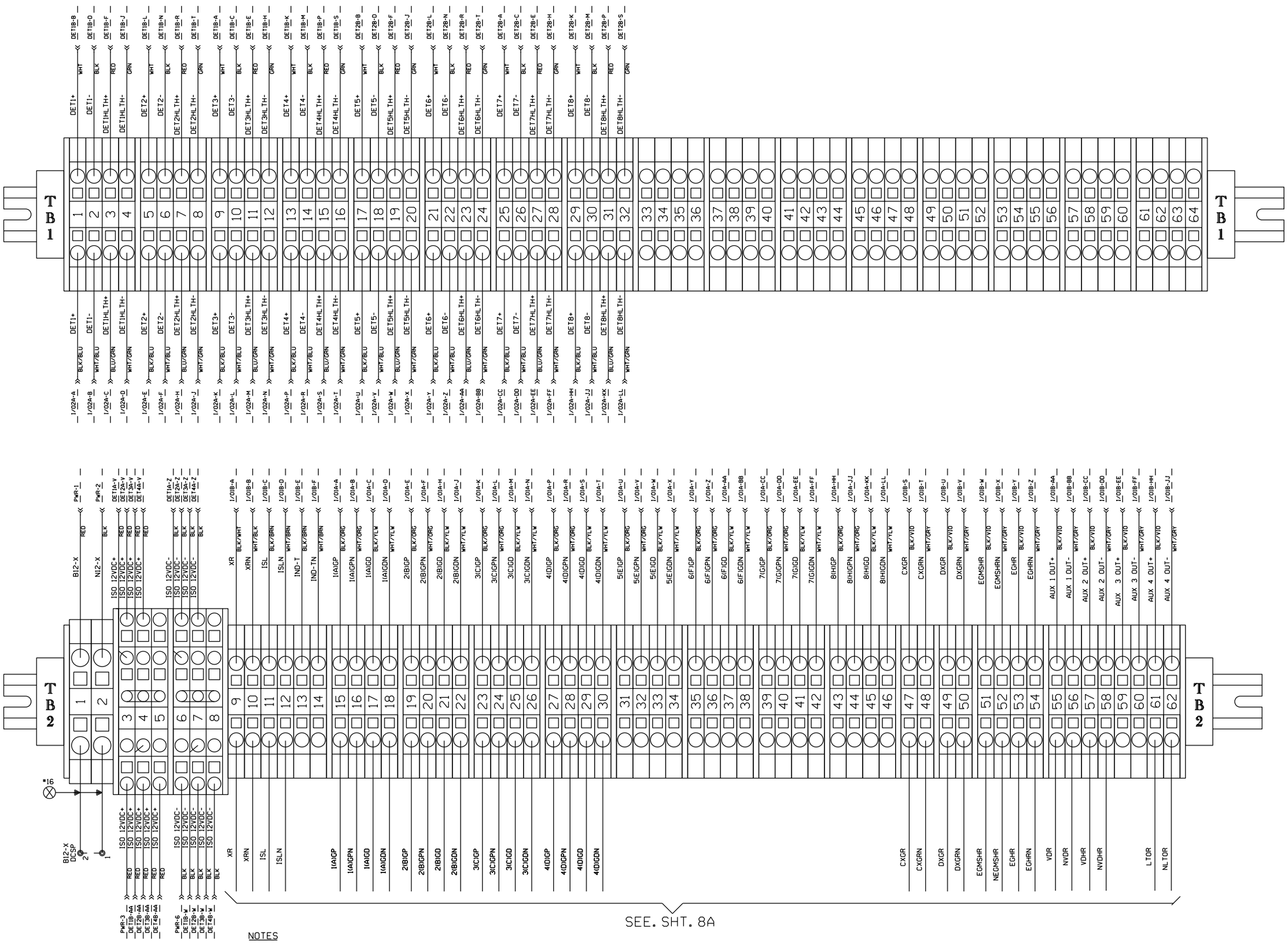

NOTES

1. TB1 PROVIDES AN EXTERNAL PASS THROUGH BETWEEN THE E-1400 MODULES AND THE VITAL INPUT MODULE IN CHASSIS POSITION 6. EGMS OR EGMS+ UNITS CONFIGURED FOR LESS THAN 4 EACH E-1400 MODULES WILL ONLY BE WIRED AS REQUIRED.
2. TB2-3 THROUGH TB2-8 PROVIDE A CONNECTION BUS FOR INTERNAL SUPPLY VOLTAGES AND MUST NOT BE USED TO SUPPLY OTHER CIRCUITS.

NEW SHEET

Designed: 3/09/12
TIER 3 PHASE 1
M.P.202.30 TO
M.P.194.80
UPGRADE XINGS TO
4 QUAD WITH EGMS,
VARIOUS CP'S
Rec': WO': 14052
IS: MWK/
/ /NST/MJF

MODIFICATION LEVEL	
O. A. LAST LEVEL CHECKED	DU
LAST LEVEL MOD THIS TYPICAL	DU
LAST LEVEL BY DESIGNER	DU
CHANGED FROM TYPICAL?	Y

REV 01.24.11 4K 2TKEGMS.9C

CIRCUIT MODIFICATIONS ARE NOT TO BE MADE WITHOUT AUTHORITY FROM THE OFFICE OF SIGNAL DESIGN

Date: 03/09/12
Des: NST
Chk: MWK
AFE: 14052

UNION PACIFIC RAILROAD
AUBURN, ILLINOIS
NARMONT ROAD
SPRINGFIELD SUBDIVISION
Office of AVP Engineering - Signal Omaha, Nebraska

Sh.: 8E
DOT 294342L
MP: 199.68
ID: CSL19968.8EX

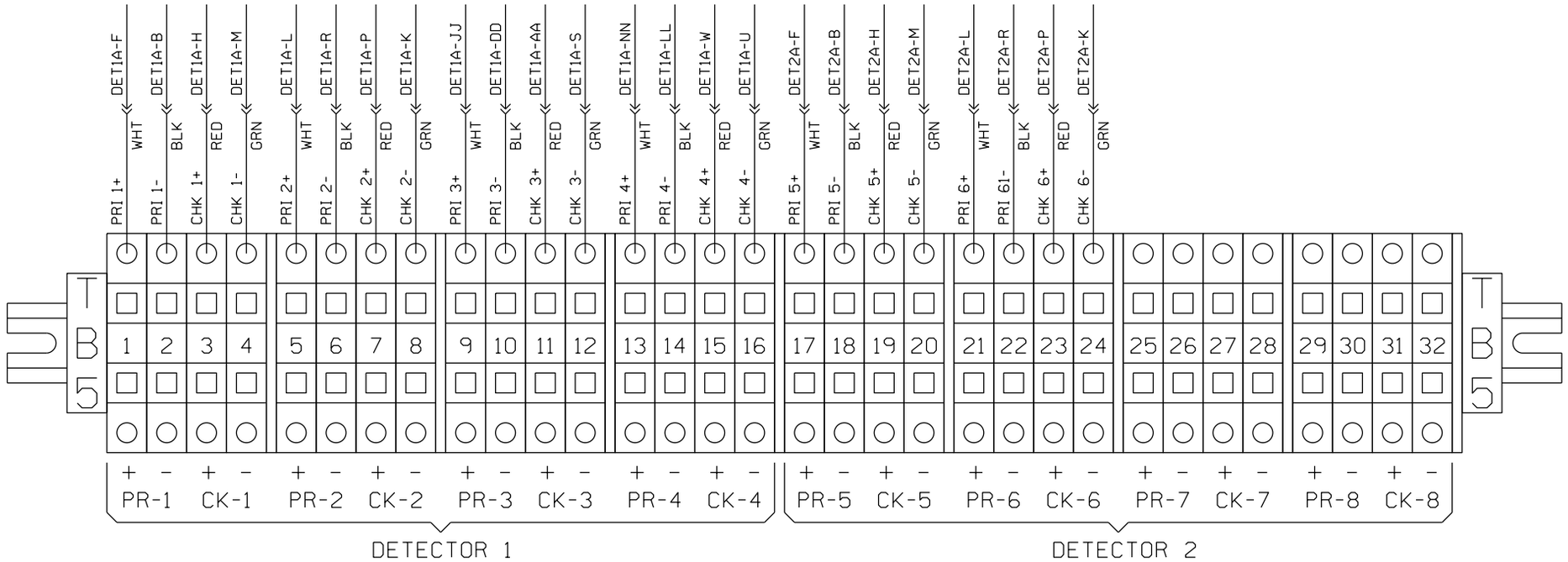

NEW SHEET

					Designed: 3/09/12 TIER 3 PHASE 1 M.P.202.30 TO M.P.194.80 UPGRADE XINGS TO 4 QUAD WITH EGMS. VARIOUS CP'S Rec: WO#: 14052 IS: MWK/ / /NST/MJF	MODIFICATION LEVEL		CIRCUIT MODIFICATIONS ARE NOT TO BE MADE WITHOUT AUTHORITY FROM THE OFFICE OF SIGNAL DESIGN	Date: 03/09/12	UNION PACIFIC RAILROAD	Sh.: 8F
						Q. A. LAST LEVEL CHECKED	DU		Des: NST	AUBURN, ILLINOIS NARMONT ROAD SPRINGFIELD SUBDIVISION	DOT 294342L
						LAST LEVEL MOD THIS TYPICAL	DU		Chk: MWK		MP: 199.68
						LAST LEVEL BY DESIGNER	DU		AFE: 14052		ID: CSL19968.8FX
						CHANGED FROM TYPICAL? REV 01.24.11 4K 2TKEGMS.9D	Y			Office of AVP Engineering - Signal Omaha, Nebraska	

NOTE

✳ = TEMPORARY JUMPERS TO BE REMOVED AND HSR SWITCH PUT INTO THE NORMAL POSITION WHEN THE HIGH SPEED EQUIPMENT IS INSTALLED.

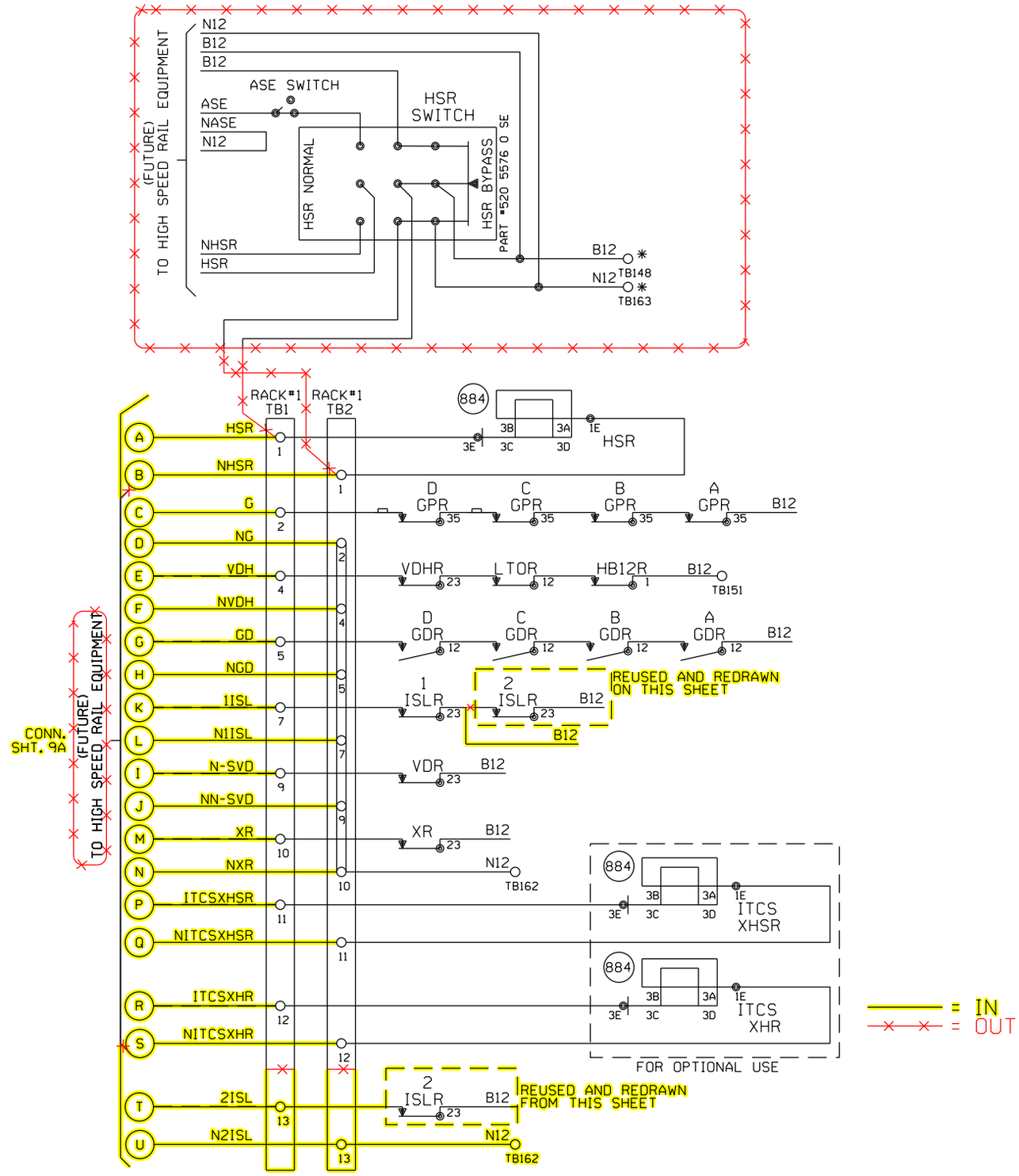

NEW SHEET

						Designed: 09/25/14 TIER 3 PHASE 1 M.P. 202.30 TO M.P. 194.80 HSR SCOPE CHANGE Rec#: WO#: 14052 IS: / /NST/MJF	Designed: 3/09/12 TIER 3 PHASE 1 M.P. 202.30 TO M.P. 194.80 UPGRADE XINGS TO 4 QUAD WITH EGMS. VARIOUS CP'S Rec#: WO#: 14052 IS: MWK/ /NST/MJF	CIRCUIT MODIFICATIONS ARE NOT TO BE MADE WITHOUT AUTHORITY FROM THE OFFICE OF SIGNAL DESIGN	Date: 09/25/14 Des: NST Chk: AFE: 14052	UNION PACIFIC RAILROAD AUBURN, ILLINOIS NARMONT ROAD SPRINGFIELD SUBDIVISION Office of AVP Engineering - Signal Omaha, Nebraska	Sh.: 9 DOT 294342L MP: 199.68 ID: CSL19968.9X

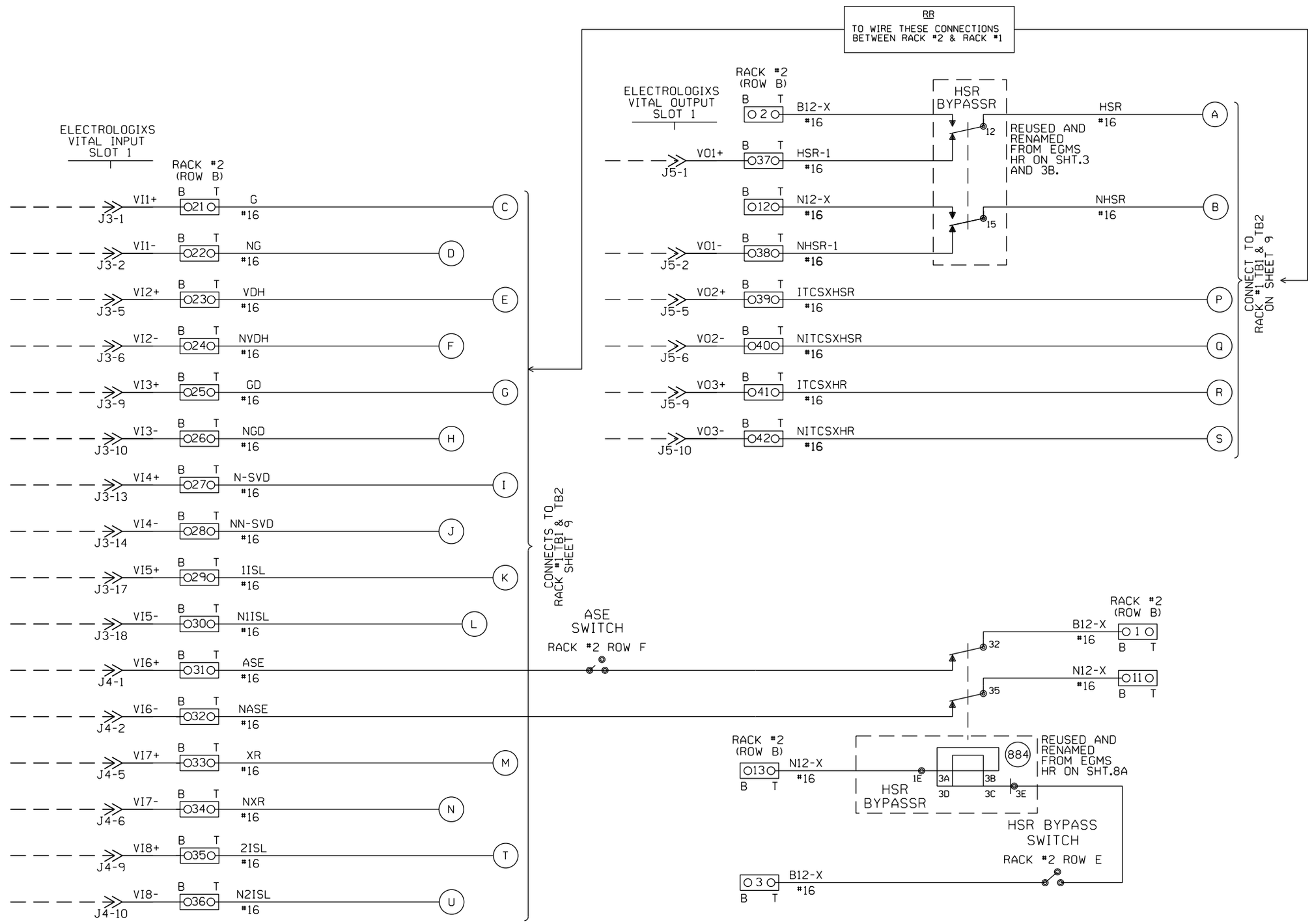

NOTES:
1. INPUT WIRES, OUTPUT WIRES, POWER WIRES, PUT IN SEPARATE BUNDLES.
2. ALL WIRES #16 UNLESS NOTED.
3. O?? O 2 POSITION WAGO BLOCK.

NEW SHEET

						Designed: 09/25/14 TIER 3 PHASE 1 M.P. 202.30 TO M.P. 194.80 HSR SCOPE CHANGE Rec#: WO#: 14052 IS: / NST/MJF	CIRCUIT MODIFICATIONS ARE NOT TO BE MADE WITHOUT AUTHORITY FROM THE OFFICE OF SIGNAL DESIGN	Date: 09/25/14 Des: NST Chk: AFE: 14052	UNION PACIFIC RAILROAD AUBURN, ILLINOIS NARMONT ROAD SPRINGFIELD SUBDIVISION Office of AVP Engineering - Signal Omaha, Nebraska	Sh.: 9A DOT 294342L MP: 199.68 ID: CSL19968.9AX

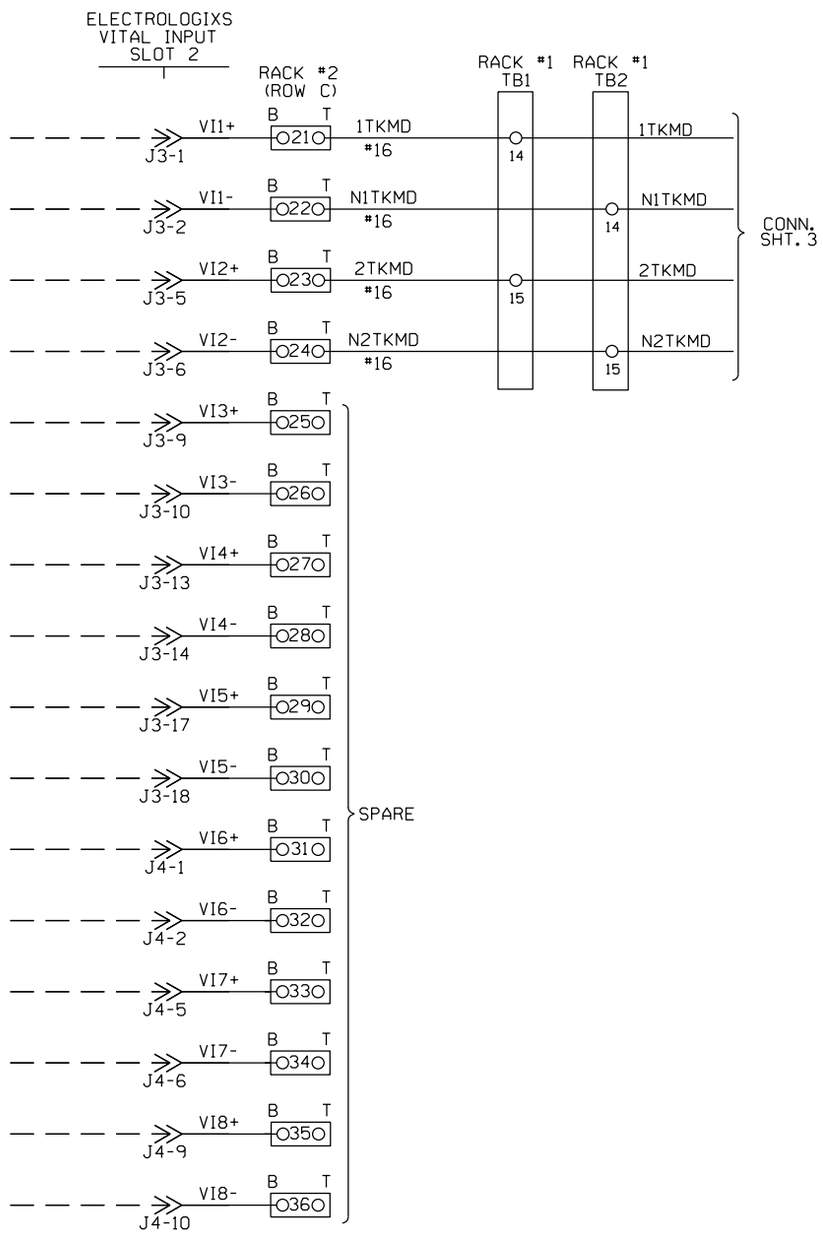

NOTES:

1. INPUT WIRES, OUTPUT WIRES, POWER WIRES, PUT IN SEPARATE BUNDLES.
2. ALL WIRES #16 UNLESS NOTED.
3. O?? O 2 POSITION WAGO BLOCK.

NEW SHEET

							Designed: 09/25/14 TIER 3 PHASE 1 M.P. 202.30 TO M.P. 194.80 HSR SCOPE CHANGE Rec#: WO#: 14052 IS: / / NST/MJF	CIRCUIT MODIFICATIONS ARE NOT TO BE MADE WITHOUT AUTHORITY FROM THE OFFICE OF SIGNAL DESIGN	Date: 09/25/14 Des: NST Chk: AFE: 14052	UNION PACIFIC RAILROAD AUBURN, ILLINOIS NARMONT ROAD SPRINGFIELD SUBDIVISION Office of AVP Engineering - Signal Omaha, Nebraska	Sh.: 9B DOT 294342L MP: 199.68 ID: CSL19968.9BX

WIRING NOTE:
WIRE 30' LONG WIRES TO BSA-4

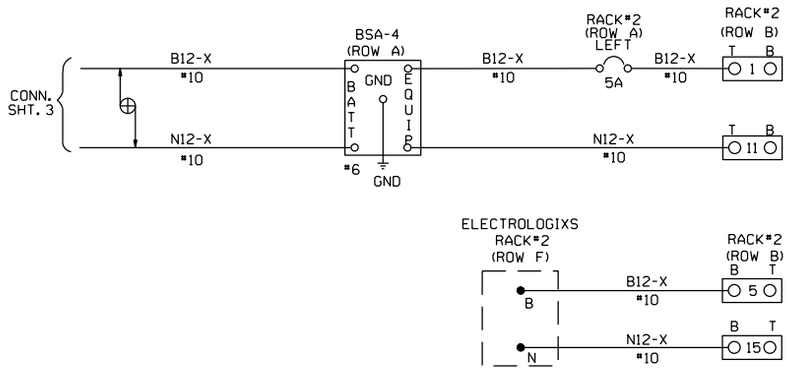

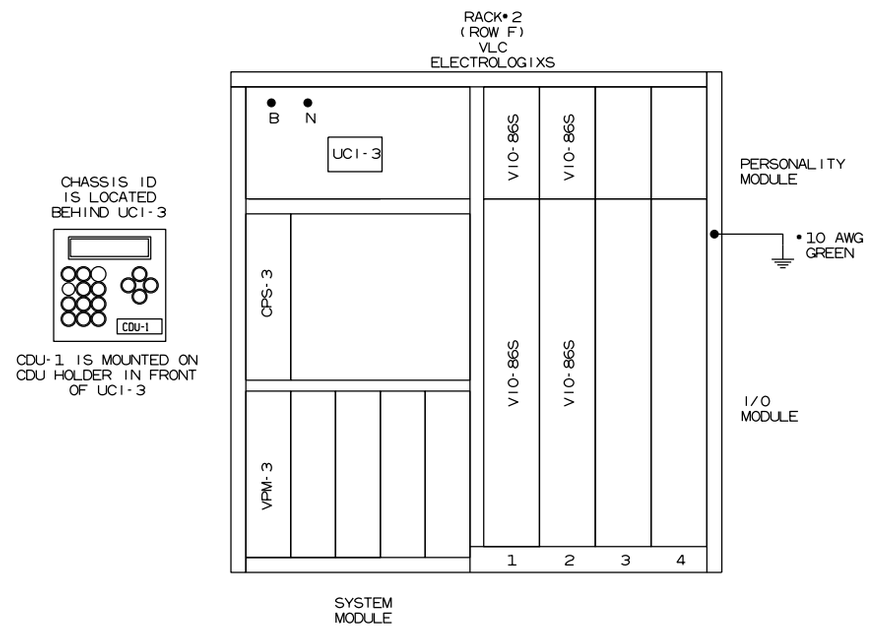

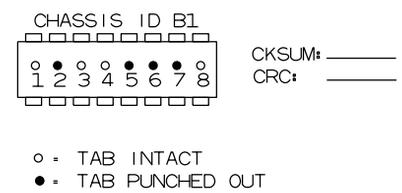

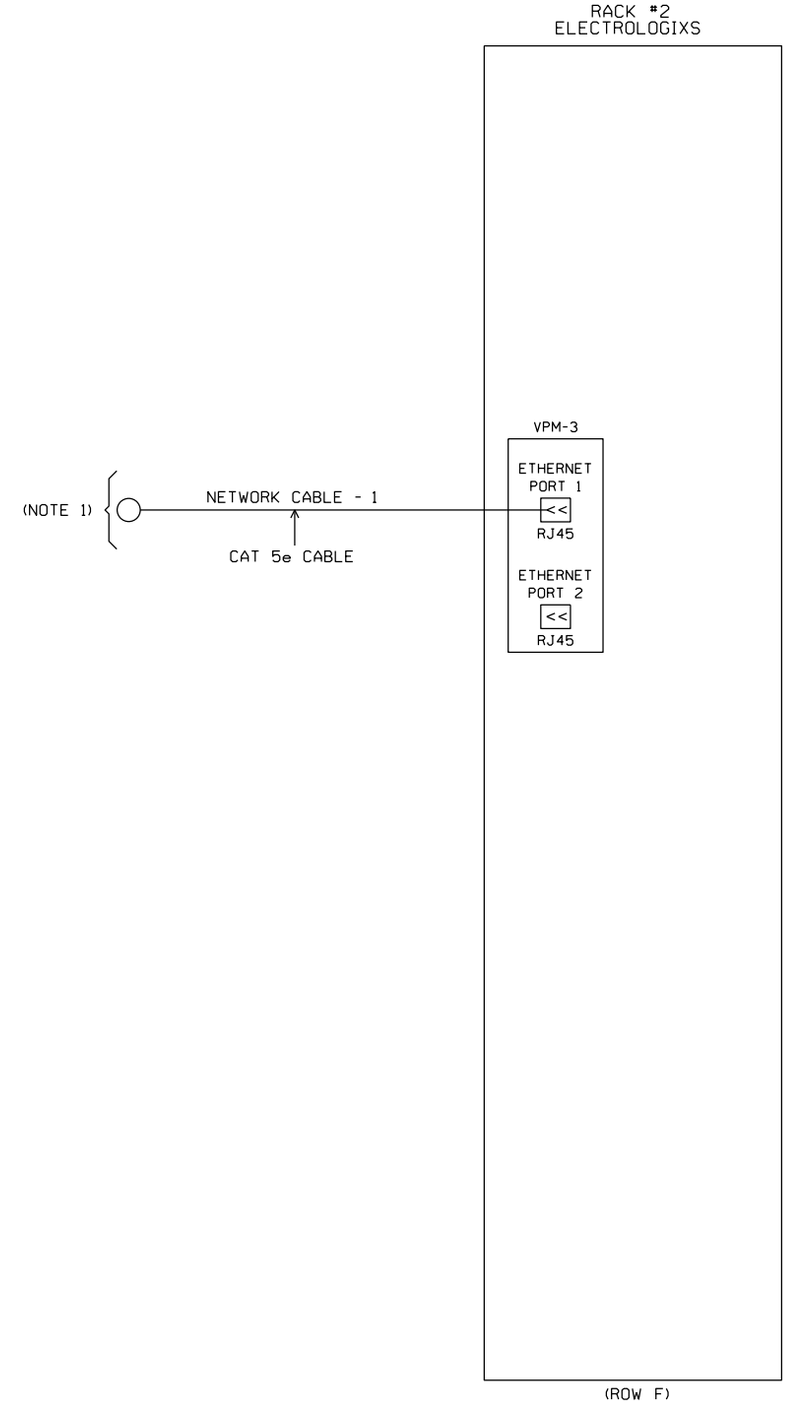

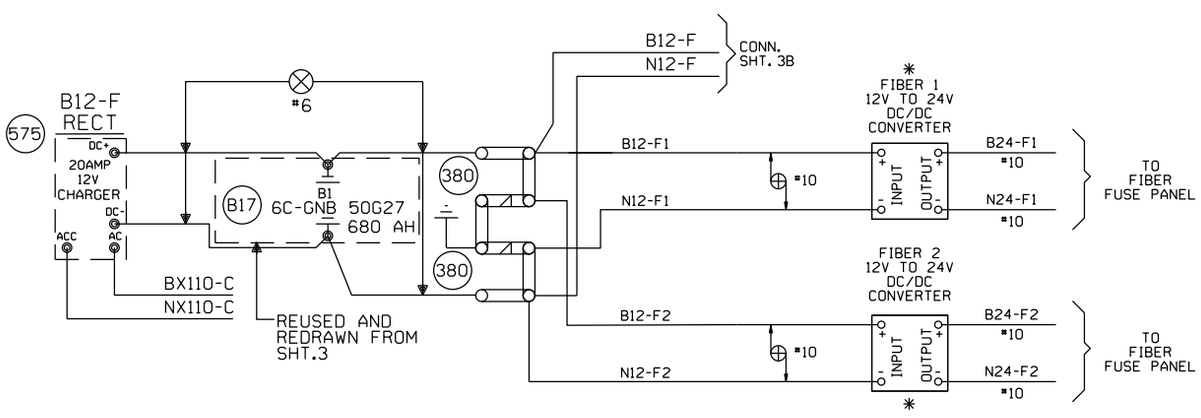

NOTES:

1. NETWORK SWITCH INSTALLED BY RR.

DENOTES TWISTED PAIR

O?? O 2 POSITION WAGO BLOCK

✳ - TO BE FIELD MOUNTED AFTER IT IS DETERMINED WHERE TO MOUNT.

NEW SHEET

Designed: 09/25/14
TIER 3 PHASE 1
M.P. 202.30 TO
M.P. 194.80
HSR SCOPE CHANGE
Rec#:
IS:
WO#: 14052
/ NST/MJF

CIRCUIT MODIFICATIONS ARE NOT TO BE MADE WITHOUT AUTHORITY FROM THE OFFICE OF SIGNAL DESIGN

Date: 09/25/14
Des: NST
Chk:
AFE: 14052

UNION PACIFIC RAILROAD
AUBURN, ILLINOIS
NARMONT ROAD
SPRINGFIELD SUBDIVISION
Office of AVP Engineering - Signal Omaha, Nebraska

Sh.: 9C
DOT 294342L
MP: 199.68
ID: CSL19968.9CX

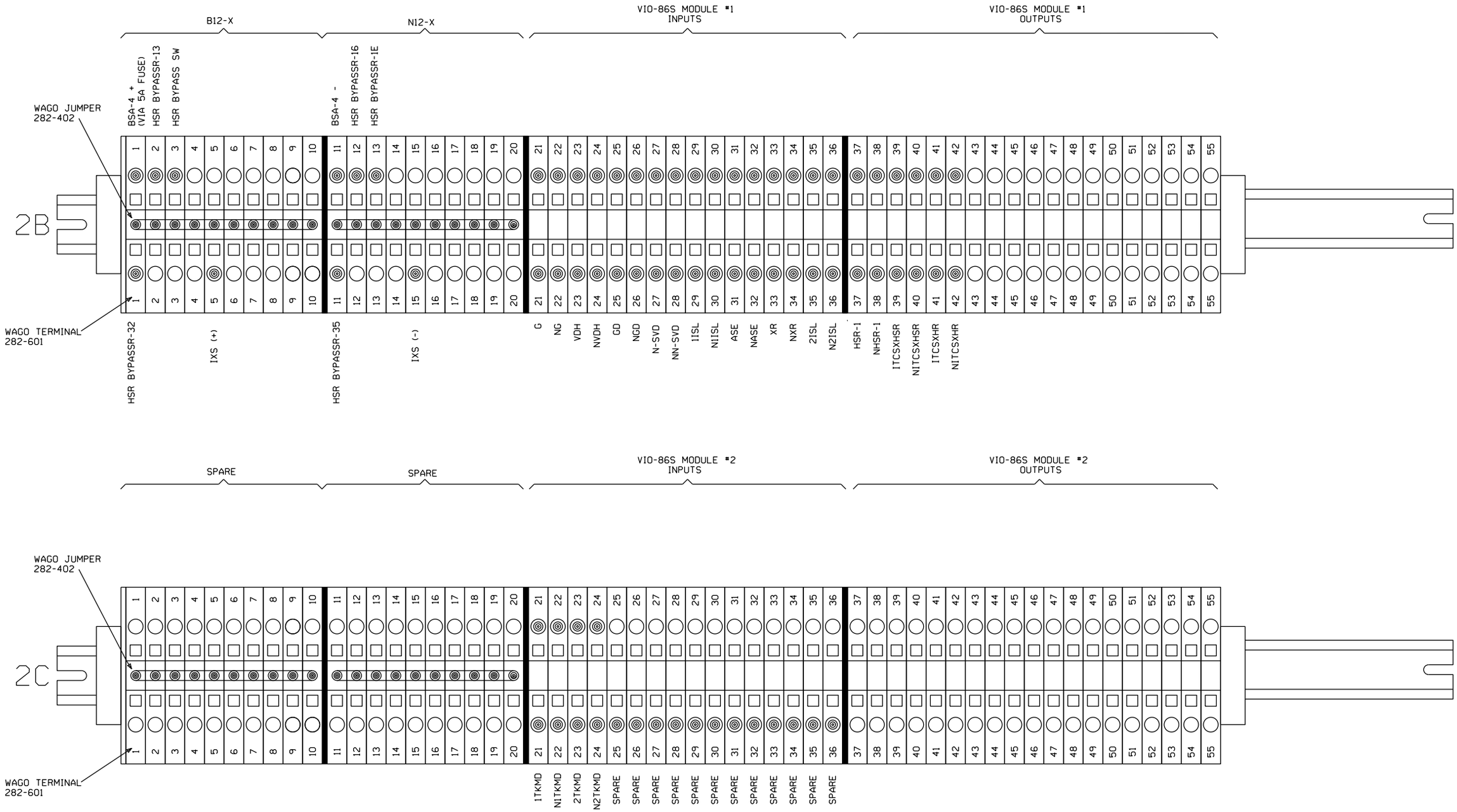

ELECTROLOGIXS WAGO BLOCKS

NEW SHEET

							Designed: 09/25/14 TIER 3 PHASE 1 M.P. 202.30 TO M.P. 194.80 HSR SCOPE CHANGE Rec#: WO#: 14052 IS: / /NST/MJF	CIRCUIT MODIFICATIONS ARE NOT TO BE MADE WITHOUT AUTHORITY FROM THE OFFICE OF SIGNAL DESIGN	Date: 09/25/14 Des: NST Chk: AFE: 14052	**UNION PACIFIC RAILROAD** AUBURN, ILLINOIS NARMONT ROAD SPRINGFIELD SUBDIVISION Office of AVP Engineering - Signal Omaha, Nebraska	Sh.: 9D DOT 294342L MP: 199.68 ID: CSL19968.9DX

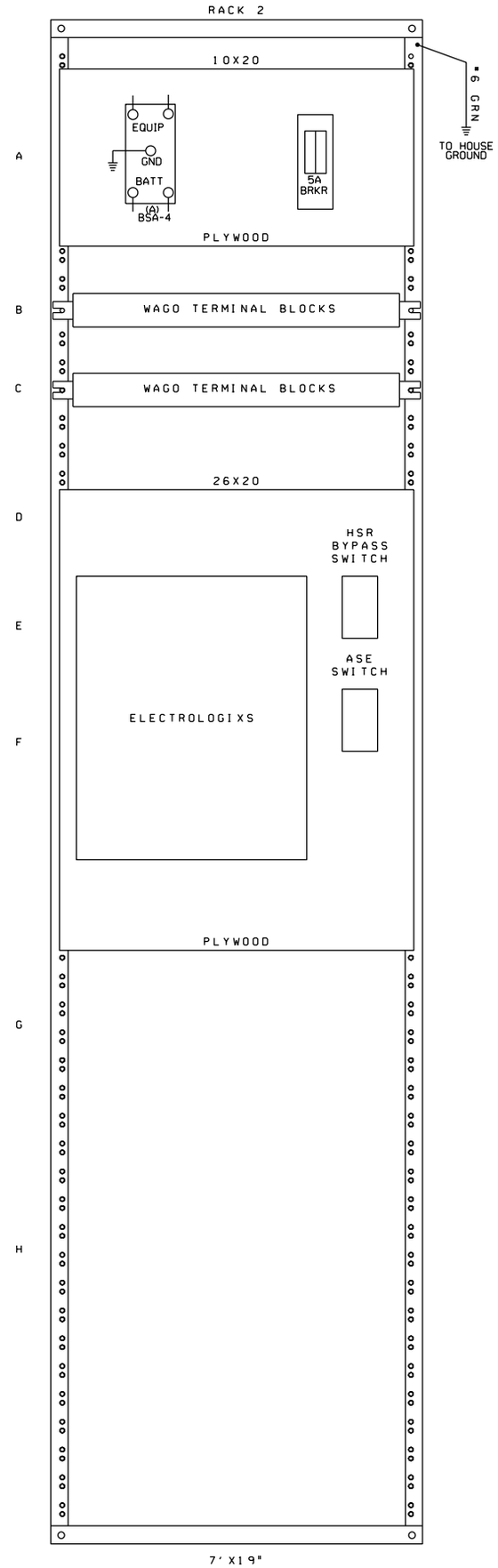

NEW SHEET

Designed: 09/25/14
TIER 3 PHASE 1
M.P. 202.30 TO
M.P. 194.80
HSR SCOPE CHANGE
Rec#:
IS:
WO#: 14052
/ /NST/MJF

CIRCUIT MODIFICATIONS ARE NOT TO BE MADE WITHOUT AUTHORITY FROM THE OFFICE OF SIGNAL DESIGN

Date: 09/25/14
Des: NST
Chk:
AFE: 14052

UNION PACIFIC RAILROAD

AUBURN, ILLINOIS
NARMONT ROAD
SPRINGFIELD SUBDIVISION

Office of AVP Engineering - Signal — Omaha, Nebraska

Sh.: 9E
DOT 294342L
MP: 199.68
ID: CSL19968.9EX

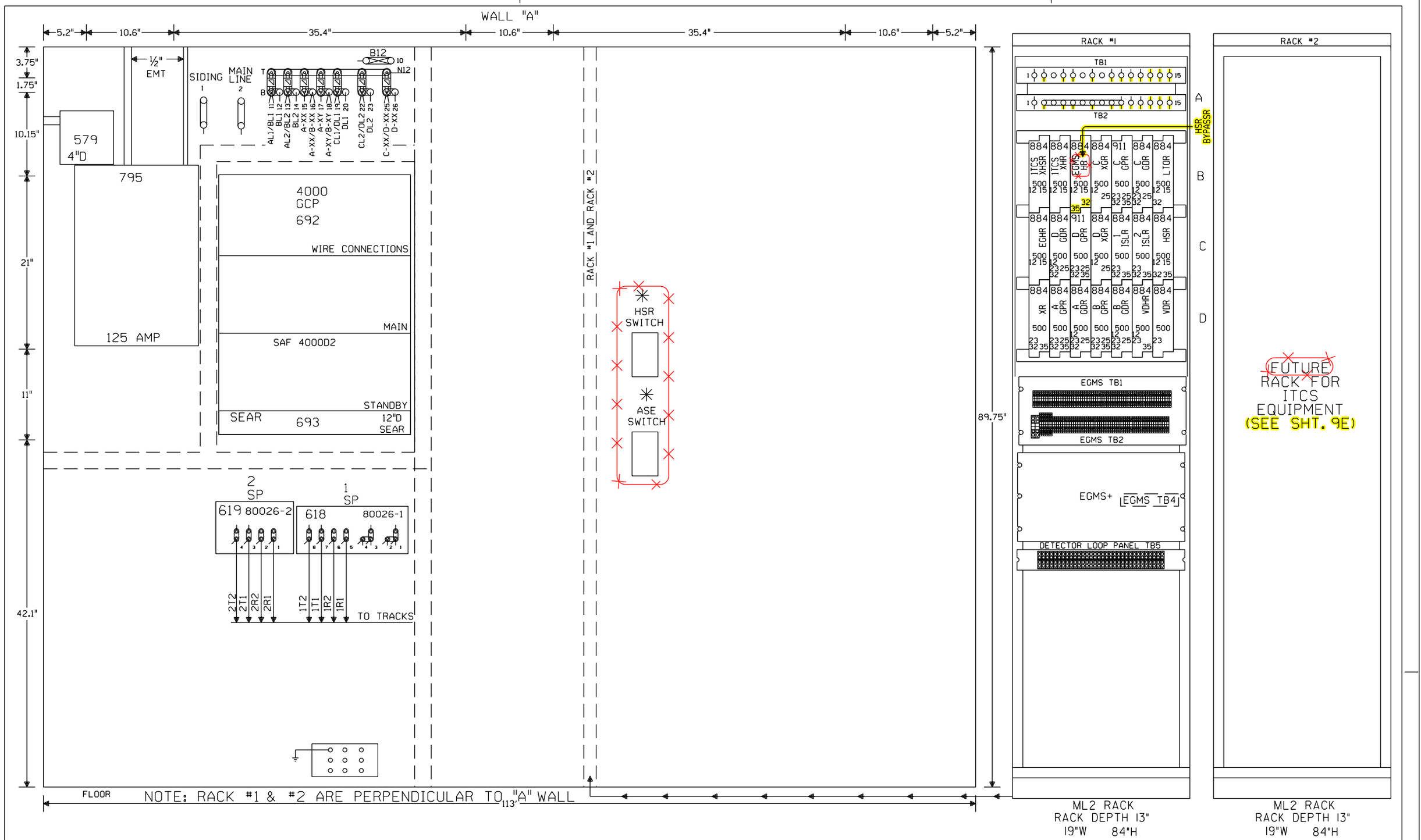

✳ - FIELD TO DETERMINE THE LOCATION OF SWITCHES

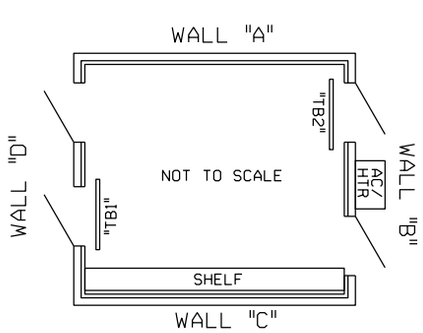

NOTE: ALL DIMENSIONS SHOWN ARE APPROXIMATE.

= IN
= OUT

NEW SHEET

						Designed: 09/25/14 TIER 3 PHASE 1 M.P. 202.30 TO M.P. 194.80 HSR SCOPE CHANGE Rec#: WO#: 14052 IS: / /NST/MJF	Designed: 3/09/12 TIER 3 PHASE 1 M.P.202.30 TO M.P.194.80 UPGRADE XINGS TO 4 QUAD WITH EGMS, VARIOUS CP'S Rec#: WO#: 14052 IS: MWK/ / /NST/MJF	CIRCUIT MODIFICATIONS ARE NOT TO BE MADE WITHOUT AUTHORITY FROM THE OFFICE OF SIGNAL DESIGN	Date: 03/09/12 Des: NST Chk: MWK AFE: 14052	UNION PACIFIC RAILROAD AUBURN, ILLINOIS NARMONT ROAD SPRINGFIELD SUBDIVISION Office of AVP Engineering - Signal Omaha, Nebraska	Sh.: 10 DOT 294342L MP: 199.68 ID: CSL19968.10X

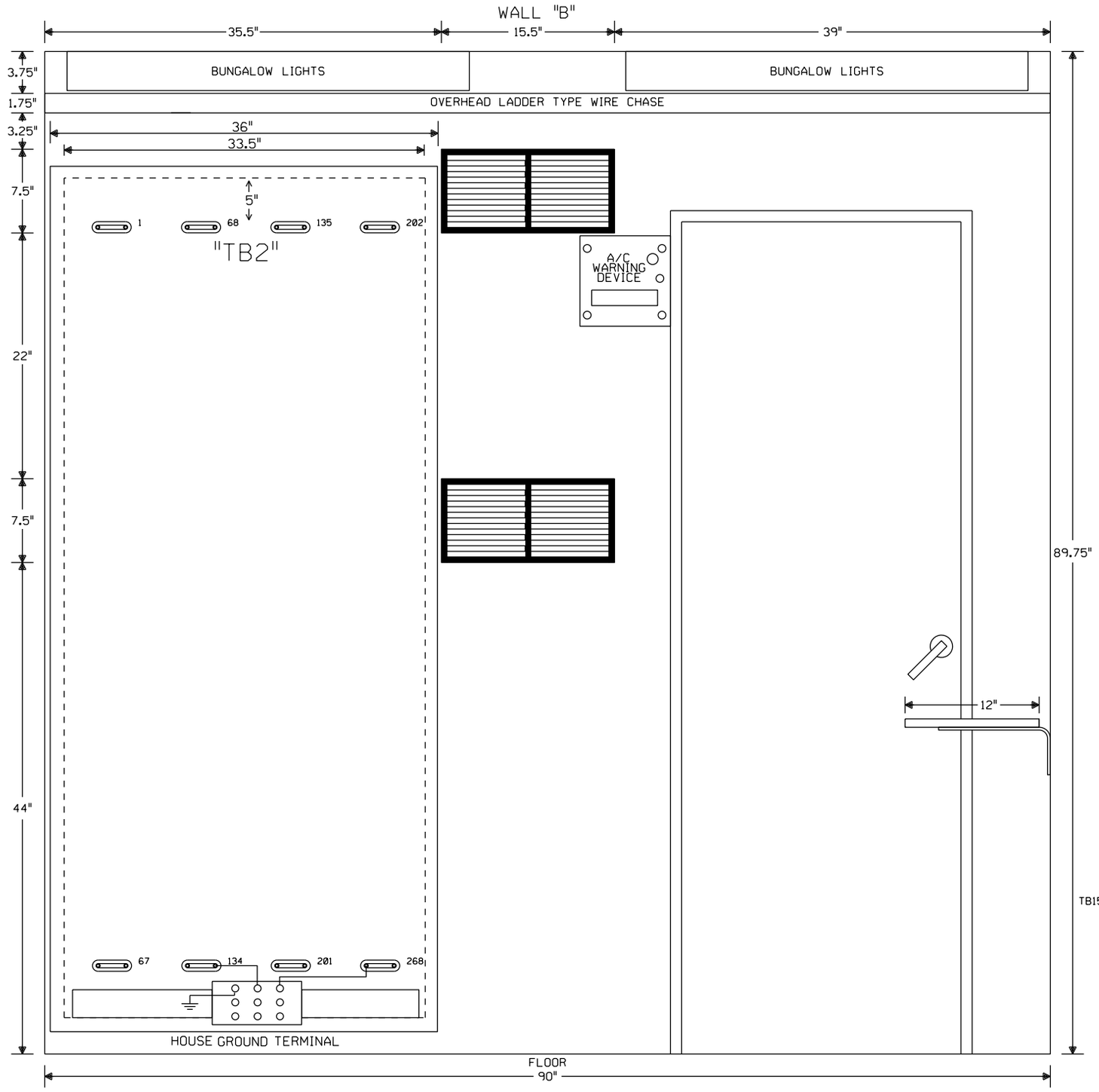

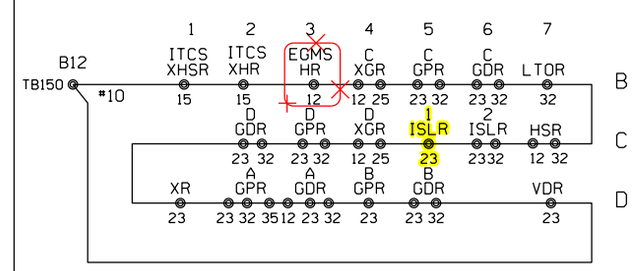

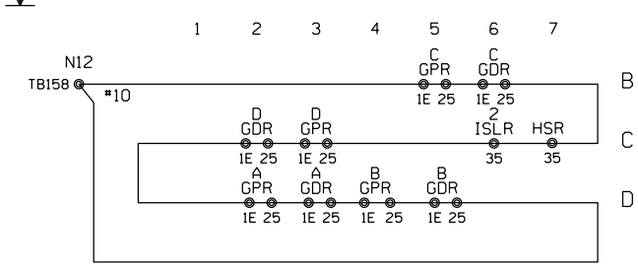

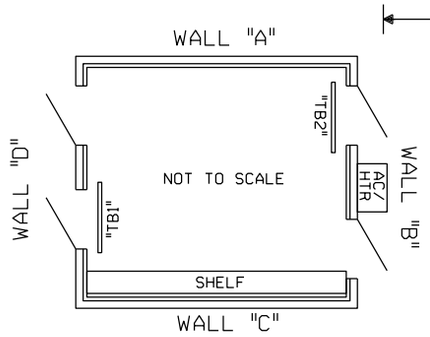

NOTE: ALL DIMENSIONS SHOWN ARE APPROXIMATE.

NOTE: NO TEST LINKS TO BE INSTALLED WITH CROSSING LIGHTING OR GATE MECH CIRCUITRY

= IN
= OUT

NEW SHEET

						Designed: 09/25/14 TIER 3 PHASE 1 M.P. 202.30 TO M.P. 194.80 HSR SCOPE CHANGE Rec#: WO#: 14052 IS: / /NST/MJF	Designed: 3/09/12 TIER 3 PHASE 1 M.P.202.30 TO M.P.194.80 UPGRADE XINGS TO 4 QUAD WITH EGMS, VARIOUS CP'S Rec#: WO#: 14052 IS: MWK/ / /NST/MJF	CIRCUIT MODIFICATIONS ARE NOT TO BE MADE WITHOUT AUTHORITY FROM THE OFFICE OF SIGNAL DESIGN	Date: 03/09/12 Des: NST Chk: MWK AFE: 14052	UNION PACIFIC RAILROAD AUBURN, ILLINOIS NARMONT ROAD SPRINGFIELD SUBDIVISION Office of AVP Engineering - Signal Omaha, Nebraska	Sh.: 11 DOT 294342L MP: 199.68 ID: CSL19968.11X

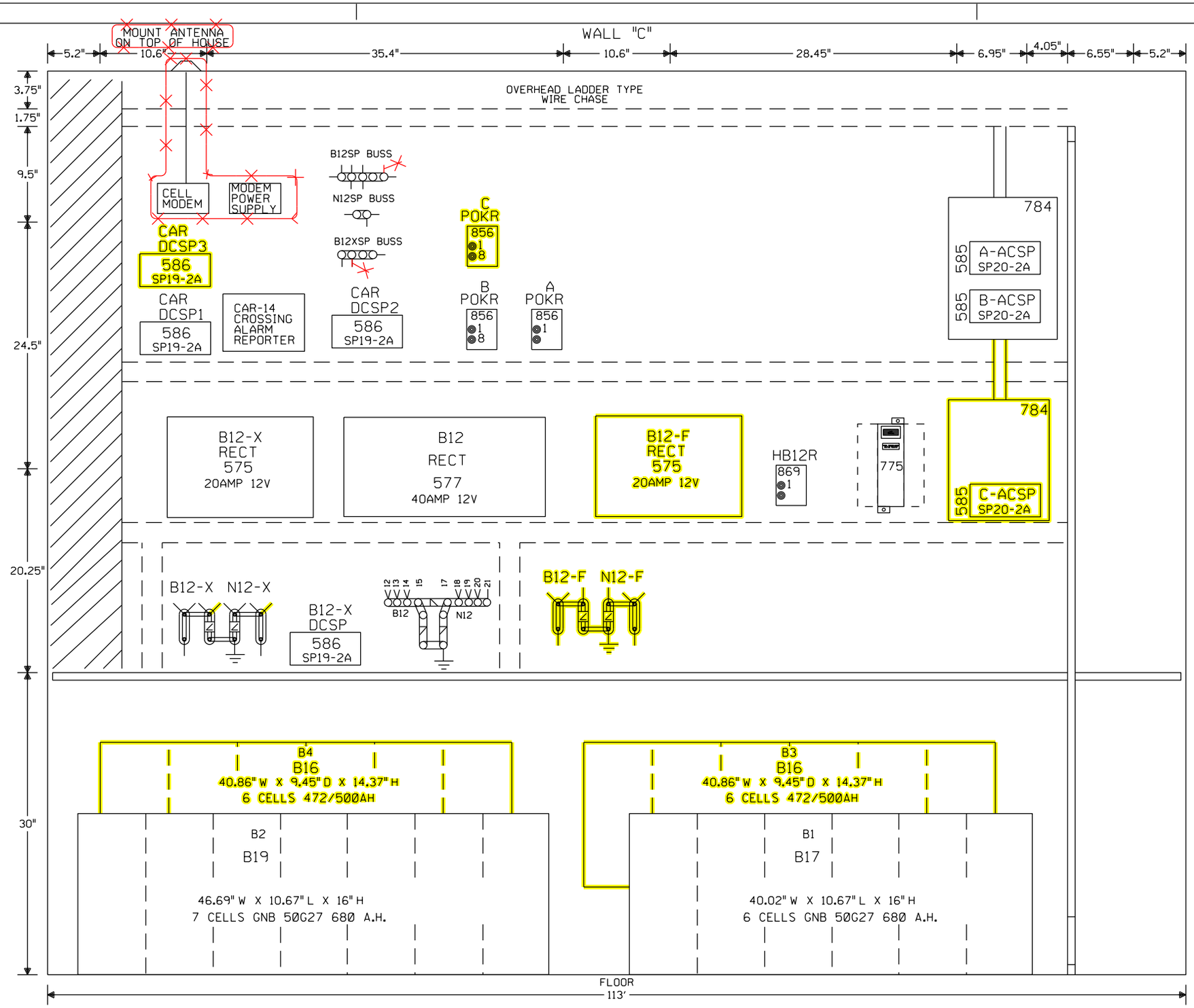

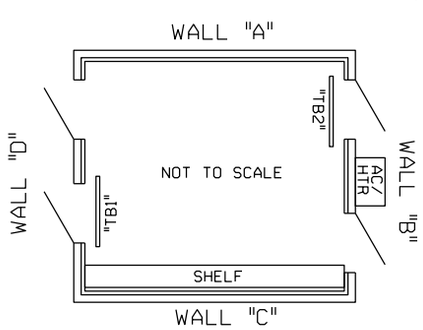

NOTE: ALL DIMENSIONS SHOWN ARE APPROXIMATE.

= IN
= OUT

NEW SHEET

Designed: 09/25/14 TIER 3 PHASE 1 M.P. 202.30 TO M.P. 194.80 HSR SCOPE CHANGE Rec#: WO#: 14052 IS: / / NST/MJF	Designed: 3/09/12 TIER 3 PHASE 1 M.P.202.30 TO M.P.194.80 UPGRADE XINGS TO 4 QUAD WITH EGMS. VARIOUS CP'S Rec#: WO#: 14052 IS: / MWK/ / NST/MJF
CIRCUIT MODIFICATIONS ARE NOT TO BE MADE WITHOUT AUTHORITY FROM THE OFFICE OF SIGNAL DESIGN	Date: 03/09/12 Des: NST Chk: MWK AFE: 14052

UNION PACIFIC RAILROAD

AUBURN, ILLINOIS
NARMONT ROAD
SPRINGFIELD SUBDIVISION

Office of AVP Engineering - Signal — Omaha, Nebraska

Sh.:	12
DOT	294342L
MP:	199.68
ID:	CSL19968.12X

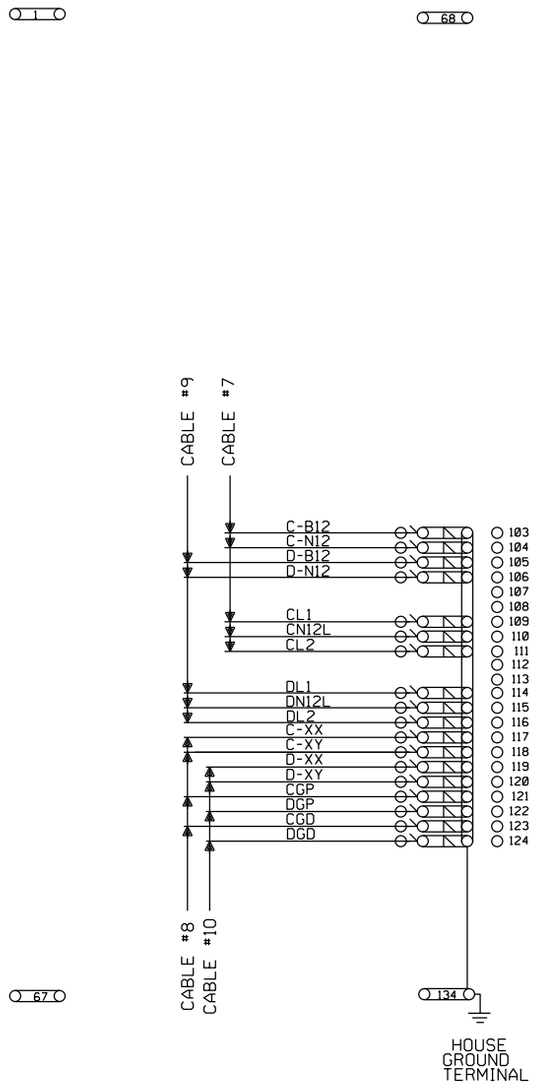

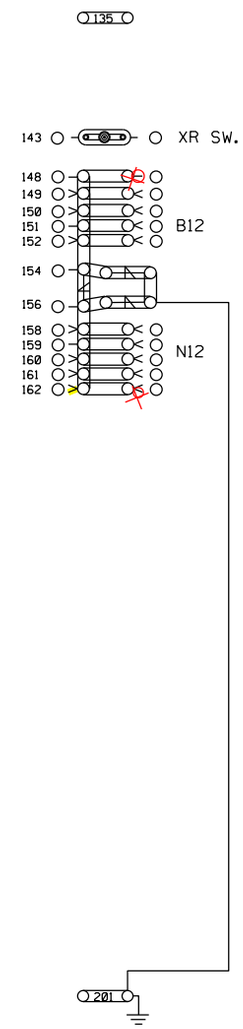

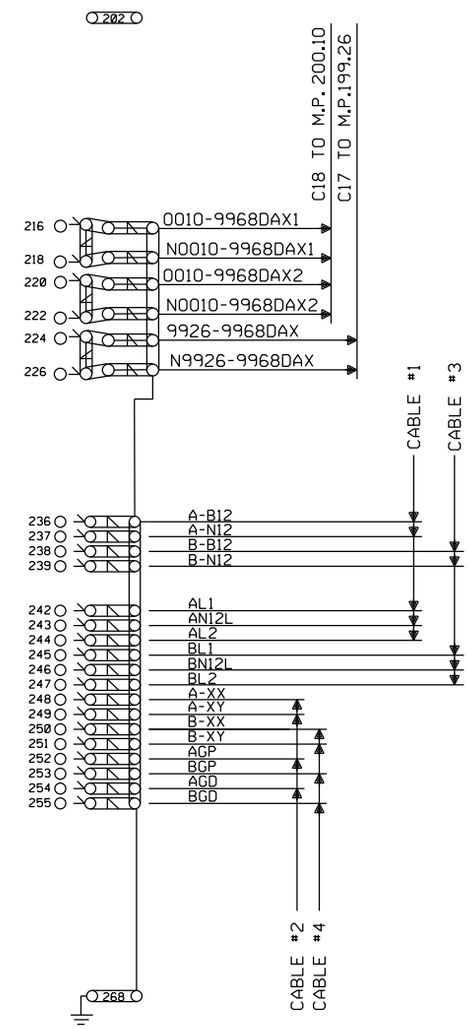

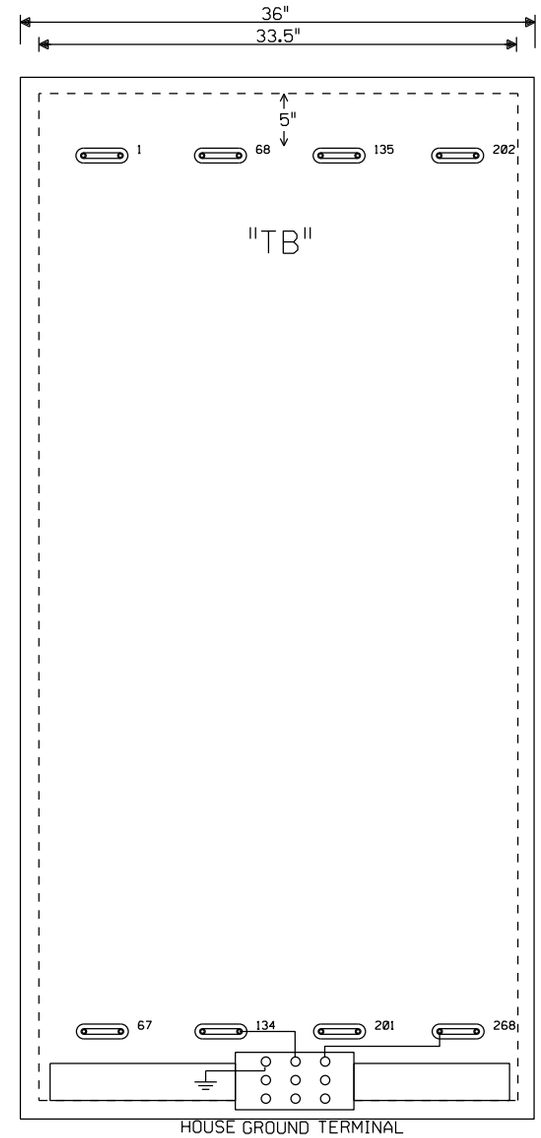

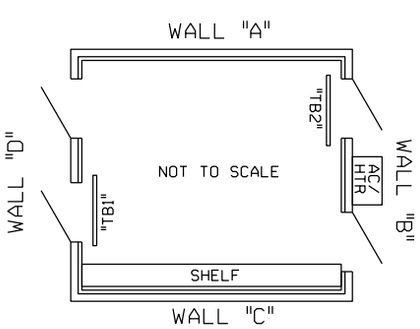

NOTE: ALL DIMENSIONS SHOWN ARE APPROXIMATE.

NOTE: NO TEST LINKS TO BE INSTALLED WITH CROSSING LIGHTING OR GATE MECH CIRCUITRY

SEE SIGNAL STANDARD DRAWING 846120UP FOR HOUSE GROUNDING SCHEME

= IN
= OUT

NEW SHEET

Designed: 09/25/14 TIER 3 PHASE 1 M.P. 202.30 TO M.P. 194.80 HSR SCOPE CHANGE Rec*: WO*: 14052 IS: / / NST/MJF	Designed: 3/09/12 TIER 3 PHASE 1 M.P.202.30 TO M.P.194.80 UPGRADE XINGS TO 4 QUAD WITH EGMS. VARIOUS CP'S Rec*: WO*: 14052 IS: MWK/ / NST/MJF

CIRCUIT MODIFICATIONS ARE NOT TO BE MADE WITHOUT AUTHORITY FROM THE OFFICE OF SIGNAL DESIGN

Date:	03/09/12
Des:	NST
Chk:	MWK
AFE:	14052

UNION PACIFIC RAILROAD

AUBURN, ILLINOIS
NARMONT ROAD
SPRINGFIELD SUBDIVISION

Office of AVP Engineering - Signal — Omaha, Nebraska

Sh.:	13
DOT	294342L
MP:	199.68
ID:	CSL19968.13X

Minimum Program Steps Report

Location and SIN

DOT Number: 294342L
Milepost Number: 199.68
Site Name: AUBURN, IL

SIN: 762010010016 *

* Parameter is part of office check number calculation.

MCF and Template Selection

MCF Name: GCP-T6X-02-4.mcf
MCF Revision: 24
MCFCRC: 09FC363B

Template = 1A:6 Trk Bi (OCCN) *

* Parameter is part of office check number calculation.

Minimum Program Steps

TEMPLATE: module configuration
Track 2/RIO 1 Slot = Track (OCCN) *
Track 5/RIO 2 Slot = RIO (OCCN) *
Track 6/RIO 3 Slot = RIO (OCCN) *

TEMPLATE: track 1-Bi, Island
Track 1 : GCP Frequency = 285 Hz (Field,TCN)
Track 1 : Approach Distance = 3155 ft (Set in Field,TCN)
Track 1 : Prime Warning Time = 38 sec (OCCN) *
Track 1 : Prime UAX = IP (OCCN) *
Track 1 : Prime UAX Pickup = 15 sec (OCCN) *
Track 1 : GCP Transmit Level = Medium (Set in Field,TCN)
Track 1 : Isl Frequency = 10.0 kHz (Set in Field)

TEMPLATE: track 2-Bi, Island
Track 2 : GCP Frequency = 645 Hz (Field,TCN)
Track 2 : Approach Distance = 2102 ft (Set in Field,TCN)
Track 2 : Prime Warning Time = 38 sec (OCCN) *
Track 2 : Prime UAX = IP (OCCN) *
Track 2 : Prime UAX Pickup = 15 sec (OCCN) *
Track 2 : GCP Transmit Level = Medium (Set in Field,TCN)
Track 2 : Isl Frequency = 7.1 kHz (Set in Field)

TEMPLATE: AND 1 XR
AND 1 Enable Used = Yes (OCCN) *

TEMPLATE: SSCC
SSCC-2 Number of GPs = 2 (OCCN) *
SSCC-2 Number of GDs = 2 (OCCN) *
SSCC 1 : Lamp Neutral Test = Off (Set in Field)
SSCC 2 : Lamp Neutral Test = Off (Set in Field)

TEMPLATE: OOS
OOS Control = OOS IPs (OCCN) *

TEMPLATE: OP assignment 1
OUT 1.1 = AND 1 XR (OCCN) *
OUT 1.2 = T1 Island (OCCN) *
OUT 2.1 = T1 Prime (OCCN) *
OUT 2.2 = T2 Island (OCCN) *

TEMPLATE: OP assignment 2
OUT 5.1 = T2 Prime (OCCN) *

TEMPLATE: IP assignment 1
IN 1.1 = T1 Prime UAX (OCCN) *
IN 1.2 = Out Of Service IP 1 (OCCN) *
IN 2.1 = T2 Prime UAX (OCCN) *
IN 2.2 = Out Of Service IP 2 (OCCN) *

TEMPLATE: IP assignment 2
IN 5.1 = AND 1 XR Enable (OCCN) *
IN 5.2 = GP 1.1 (OCCN) *
IN 6.1 = T2 Prime UAX (OCCN) *

TEMPLATE: IP assignment SSCC
IN 7.1 = AND 1 XR Enable (OCCN) *
IN 7.2 = GD 1.1 (OCCN) *
IN 7.4 = GD 1.2 (OCCN) *
IN 8.2 = GD 2.1 (OCCN) *
IN 8.3 = GP 2.1 (OCCN) *
IN 8.4 = GD 2.2 (OCCN) *
IN 8.5 = GP 2.2 (OCCN) *

TEMPLATE: SEAR
SP 3.1 = General 3 (OCCN) *
SP 4.1 = General 4 (OCCN) *

GCP: track 1
Track 1 : Island Distance = 123 ft (Set in Field,TCN)

GCP: track 2
Track 2 : Island Distance = 123 ft (Set in Field,TCN)

ISLAND: track 1
Track 1 : Pickup Delay (2s +) = 2 sec (OCCN) *

ISLAND: track 2
Track 2 : Pickup Delay (2s +) = 2 sec (OCCN) *

ADVANCED: site options
Daylight Savings = Off (Set in Field)

SEAR: slot 1-4 inputs
IN 4.1 = Vehicle Det Hlth (OCCN) *
IN 4.2 = 3 Vehicle Detect (OCCN) *

SEAR: inputs slot 5
IN 5.3 = General 1 (OCCN) *
IN 5.4 = General 2 (OCCN) *

* Parameter is part of office check number calculation.

Check Numbers

Office Check Number: 603D6AC5
Config. Check Number: 4AD9445A
(Based on MCF Revision 24)

Parameters not part of office check number calculation:

Track 1 : GCP Frequency = 285 Hz
Track 1 : Approach Distance = 3155 ft (Set in Field)
Track 1 : GCP Transmit Level = Medium (Set in Field)
Track 1 : Isl Frequency = 10.0 kHz
Track 2 : GCP Frequency = 645 Hz
Track 2 : Approach Distance = 2102 ft (Set in Field)
Track 2 : GCP Transmit Level = Medium (Set in Field)
Track 2 : Isl Frequency = 7.1 kHz
SSCC 1 : Lamp Neutral Test = Off (Set in Field)
SSCC 2 : Lamp Neutral Test = Off (Set in Field)
Track 1 : Island Distance = 123 ft (Set in Field)
Track 2 : Island Distance = 123 ft (Set in Field)
Daylight Savings = Off (Set in Field)

Comments

<none>

Configuration Package File

Filename: CSL19968_294342L.pac
Path: H:\UP\Springfield Sub Tier 3 Ph. 1 11-404-1 co\PAC Files\199.68\
Date/Time: 12/18/2014 14:20:02

TO BE VOIDED
09/25/14
W.O. 14052 NST/MJF

NEW SHEET

Designed: 3/09/12
TIER 3 PHASE 1
M.P.202.30 TO
M.P.194.80
UPGRADE XINGS TO
4 QUAD WITH EGMS,
VARIOUS CP'S
Rec'd: WO#: 14052
IS: MWK/
/ /NST/MJF

NOTE: Actual OFFSET and ISLAND distances must be verified by field personnel.

CIRCUIT MODIFICATIONS ARE NOT TO BE MADE WITHOUT AUTHORITY FROM THE OFFICE OF SIGNAL DESIGN

Date:	03/09/12
Des:	NST
Chk:	MWK
AFE:	14052

UNION PACIFIC RAILROAD
AUBURN, ILLINOIS
NARMONT ROAD
SPRINGFIELD SUBDIVISION
Office of AVP Engineering - Signal Omaha, Nebraska

Sh.:	3A
DOT	294342L
MP:	199.68
ID:	CSL19968.3AX

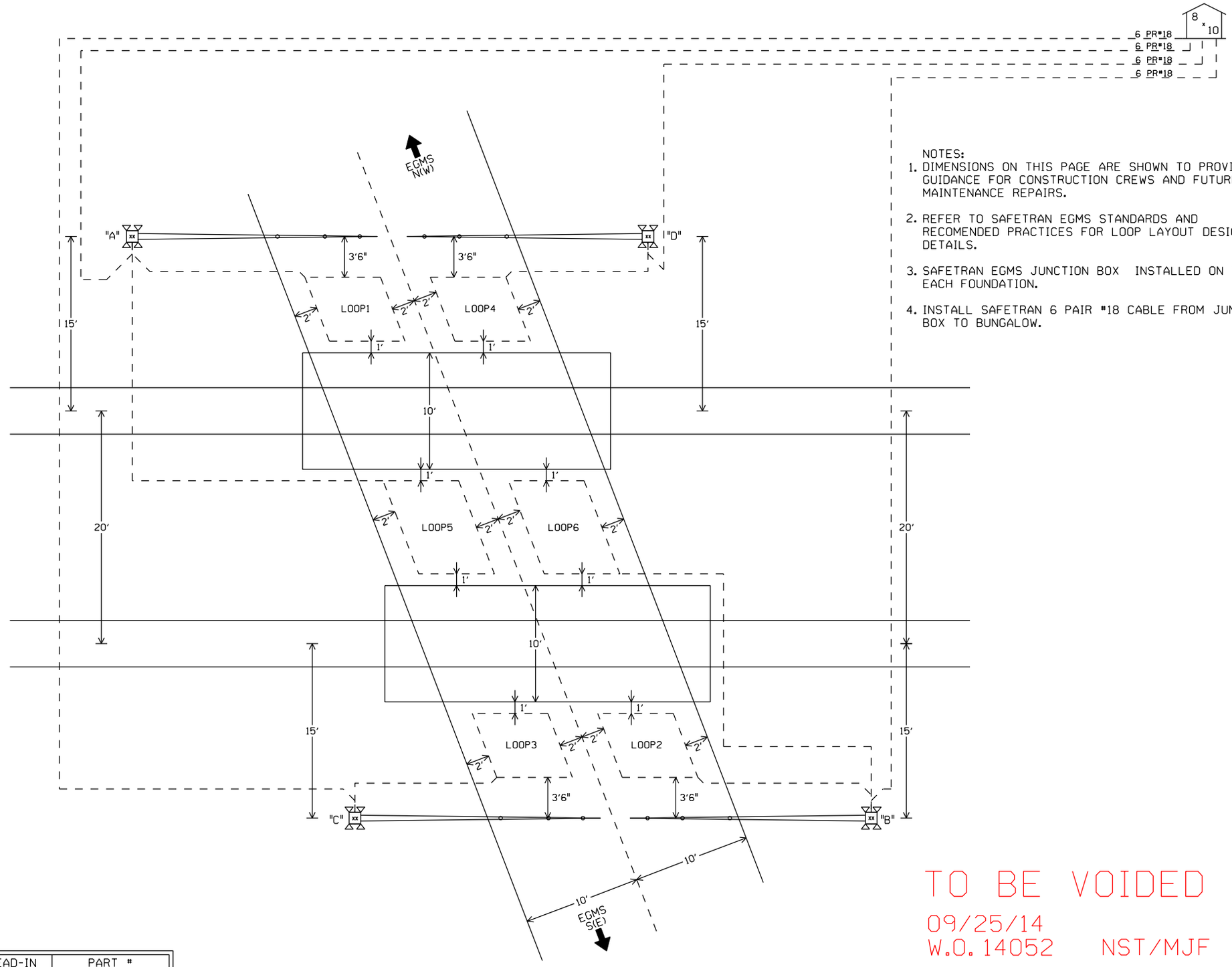

NOTES:

1. DIMENSIONS ON THIS PAGE ARE SHOWN TO PROVIDE GUIDANCE FOR CONSTRUCTION CREWS AND FUTURE MAINTENANCE REPAIRS.
2. REFER TO SAFETRAN EGMS STANDARDS AND RECOMENDED PRACTICES FOR LOOP LAYOUT DESIGN DETAILS.
3. SAFETRAN EGMS JUNCTION BOX INSTALLED ON TOP OF EACH FOUNDATION.
4. INSTALL SAFETRAN 6 PAIR #18 CABLE FROM JUNCTION BOX TO BUNGALOW.

LOOP PARAMETERS

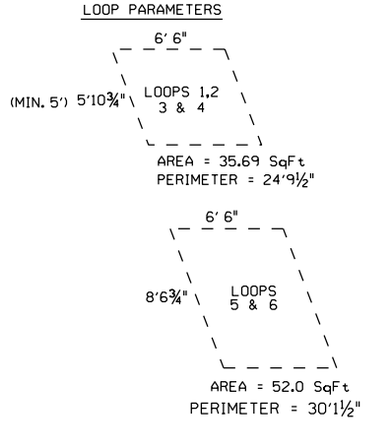

TO BE VOIDED
09/25/14
W.O. 14052 NST/MJF

℄ +

LOOP PLACEMENT SKETCH
NOT TO SCALE

LOOP SIZES

LOOP #	LOOP PERIMETER	LOOP LEAD-IN	PART #
1	25'	25'	PLC-25-25
2	25'	25'	PLC-25-25
3	25'	25'	PLC-25-25
4	25'	25'	PLC-25-25
5	31'	50'	PLC-31-50
6	31'	50'	PLC-31-50

NEW SHEET

Designed: 3/09/12
TIER 3 PHASE 1
M.P.202.30 TO
M.P.194.80
UPGRADE XINGS TO
4 QUAD WITH EGMS,
VARIOUS CP'S
Rec": WO": 14052
IS: MWK/
/ /NST/MJF

MODIFICATION LEVEL	
O.A. LAST LEVEL CHECKED	DU
LAST LEVEL MOD THIS TYPICAL	DU
LAST LEVEL BY DESIGNER	DU
CHANGED FROM TYPICAL?	Y

REV 01.24.11 4K 2TKEGMS.8B

CIRCUIT MODIFICATIONS ARE NOT TO BE MADE WITHOUT AUTHORITY FROM THE OFFICE OF SIGNAL DESIGN

Date: 03/09/12
Des: NST
Chk: MWK
AFE: 14052

UNION PACIFIC RAILROAD
AUBURN, ILLINOIS
NARMONT ROAD
SPRINGFIELD SUBDIVISION
Office of AVP Engineering - Signal Omaha, Nebraska

Sh.: 8B
DOT 294342L
MP: 199.68
ID: CSL19968.8BX