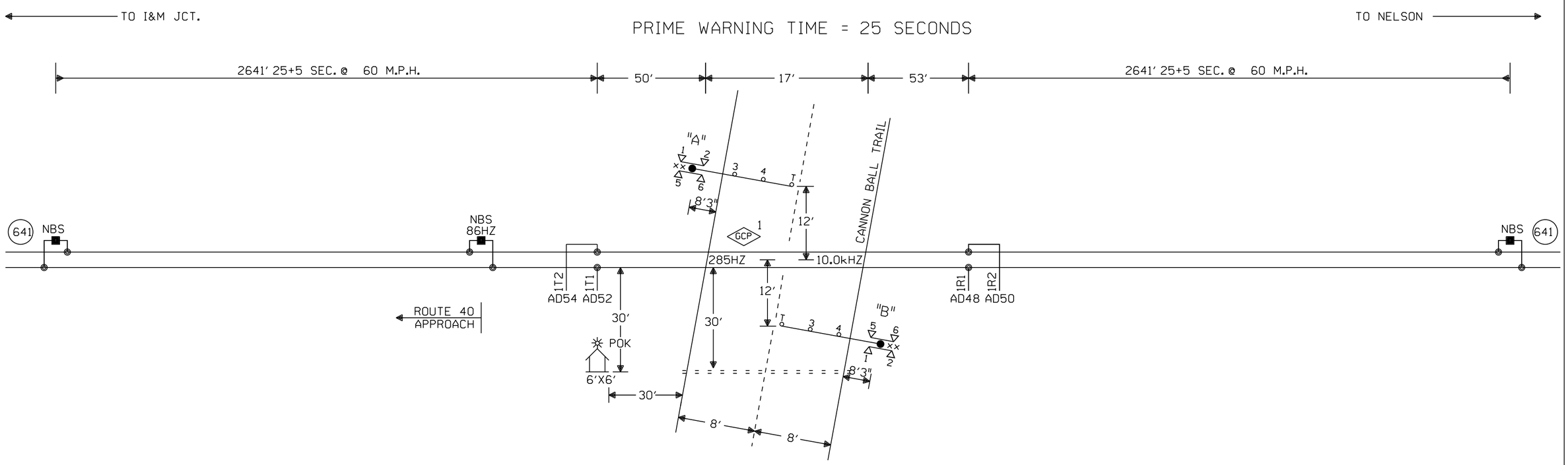

CONNECTS TO M.P. 34.89

CONNECTS TO M.P. 33.11

NOTES:

⊗ = TWISTED WIRES
INSULATED 1 TWIST PER FT.
ALL TRACK WIRES 2C. #6

TRANSMITTER AND RECEIVER LEADS TO BE SEPARATED BY AT LEAST 12" IN TRENCH, LENGTHS SHOULD NOT EXCEED MANUFACTURES RECOMMENDATION.

TOP OF FOUNDATION TO BE AT SAME ELEVATION AS THE SURFACE OF THE TRAVELED WAY & NO MORE THAN 4" ABOVE THE SURFACE OF THE GROUND.

ALL BUNGALOW WIRING TO BE #16 AWG FLEX UNLESS OTHERWISE SPECIFIED EXCEPT ALL GROUND WIRE TO BE #6 AWG FLEX OR LARGER.

ALL WIRING IN GATE MECHANISM TO BE #10 "AWG FLEX".

REFER TO UP STANDARD DWG FOR BUNGALOW GROUNDING.

ALL LIGHTS TO BE 12" ROUNDELS.

= = = = = = 4" X 40' CONDUIT

LIGHTS: LED LIGHTS

GATE A: 16'
GATE B: 16'

xx = BELL

CONSTRUCTION NOTES:

FIELD HAVE ICC PERSONNEL VERIFY THE PLACEMENT OF THE BUNGALOW.
THE CABIN AND MATERIAL FOR THIS CROSSING IS STORED AT NELSON IL.
THE CABIN AND MATERIAL WAS ORDERED THROUGH
THE PEORIA SUB PTC PROJECT W.O. 83393, 83394, OR 83395.
CAR 14 CABLE AND ALL MATERIAL FOR SHT 2A NEED TO BE ORDERED
ENSURE ISLAND LENGTH IS MIN. 120'

W(S) ◄——○——► E(N)

NEW SHEET

Designed: 4/28/14
INSTALL FLASHERS GATES AND CWT AT CANNON BALL TRAIL M.P.34.13
Rec#: 15:
WO#: 23707 /MRN /WJC/JTB

MODIFICATION LEVEL	
Q.A. LAST LEVEL CHECKED	DQ
LAST LEVEL MOD THIS TYPICAL	DQ
LAST LEVEL BY DESIGNER	DU
CHANGED FROM TYPICAL?	Y

REV 02.01.08 4K 1TKBG.1

CIRCUIT MODIFICATIONS ARE NOT TO BE MADE WITHOUT AUTHORITY FROM THE OFFICE OF SIGNAL DESIGN

Date: 04/28/14
Des: WJC
Chk: MRN
AFE: 23707

UNION PACIFIC RAILROAD
BUDA, ILLINOIS
CANNON BALL TRAIL
PEORIA SUBDIVISION
Office of AVP Engineering - Signal Omaha, Nebraska

Sh.: 1
DOT 175695W
MP: 34.13
ID: STL3413.1X

STL3413.1X 8/21/2014 10:40:39 AM

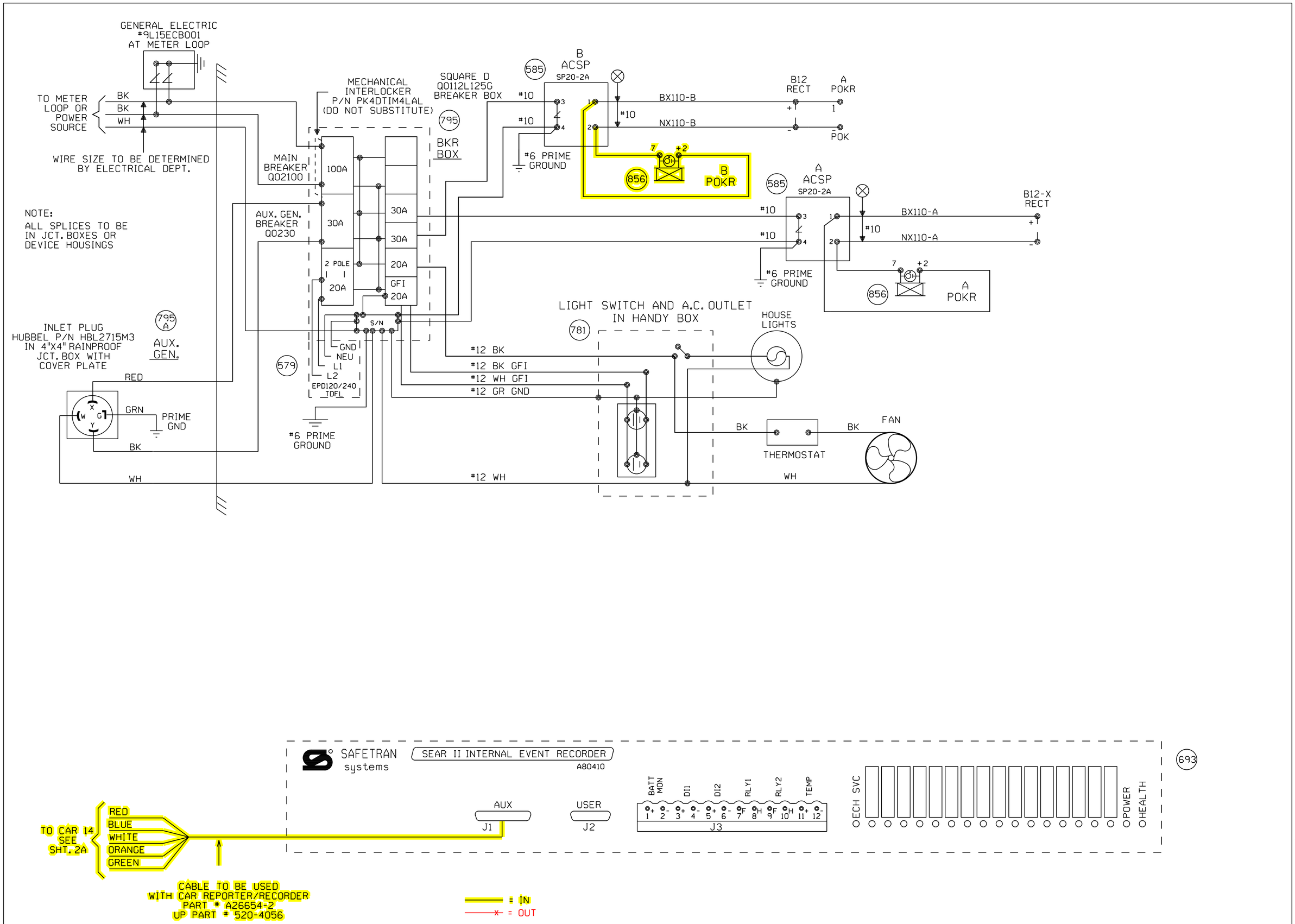

~~NEW SHEET~~

				Designed: 4/28/14 INSTALL FLASHERS GATES AND CWT AT CANNON BALL TRAIL M.P.34.13 Rec#: WO#: 23707 IS: / /WJC/JTB	1 2/08/08 INSTALL ELECTROCODE FROM M.P. 20.00 TO M.P. 43.00 PHASE 2 A.F.E. 83394 DLD/RCB /SSS/RCB	MODIFICATION LEVEL Q.A. LAST LEVEL CHECKED DQ LAST LEVEL MOD THIS TYPICAL DQ LAST LEVEL BY DESIGNER DQ CHANGED FROM TYPICAL? N REV 02.01.08 4K SEARAC.2	CIRCUIT MODIFICATIONS ARE NOT TO BE MADE WITHOUT AUTHORITY FROM THE OFFICE OF SIGNAL DESIGN	Date: 2/08/08 Des: SSS Chk: DLD AFE: 83394	UNION PACIFIC RAILROAD BUDA, ILLINOIS TO I&M JCT., ILLINOIS C.T.C. CIRCUITS Office of AVP Engineering - Signal Omaha, Nebraska	Sh.: 2 DOT 175695W MP: 34.13 ID: STL3413.2X

STL3413.2X 8/21/2014 10:40:46 AM

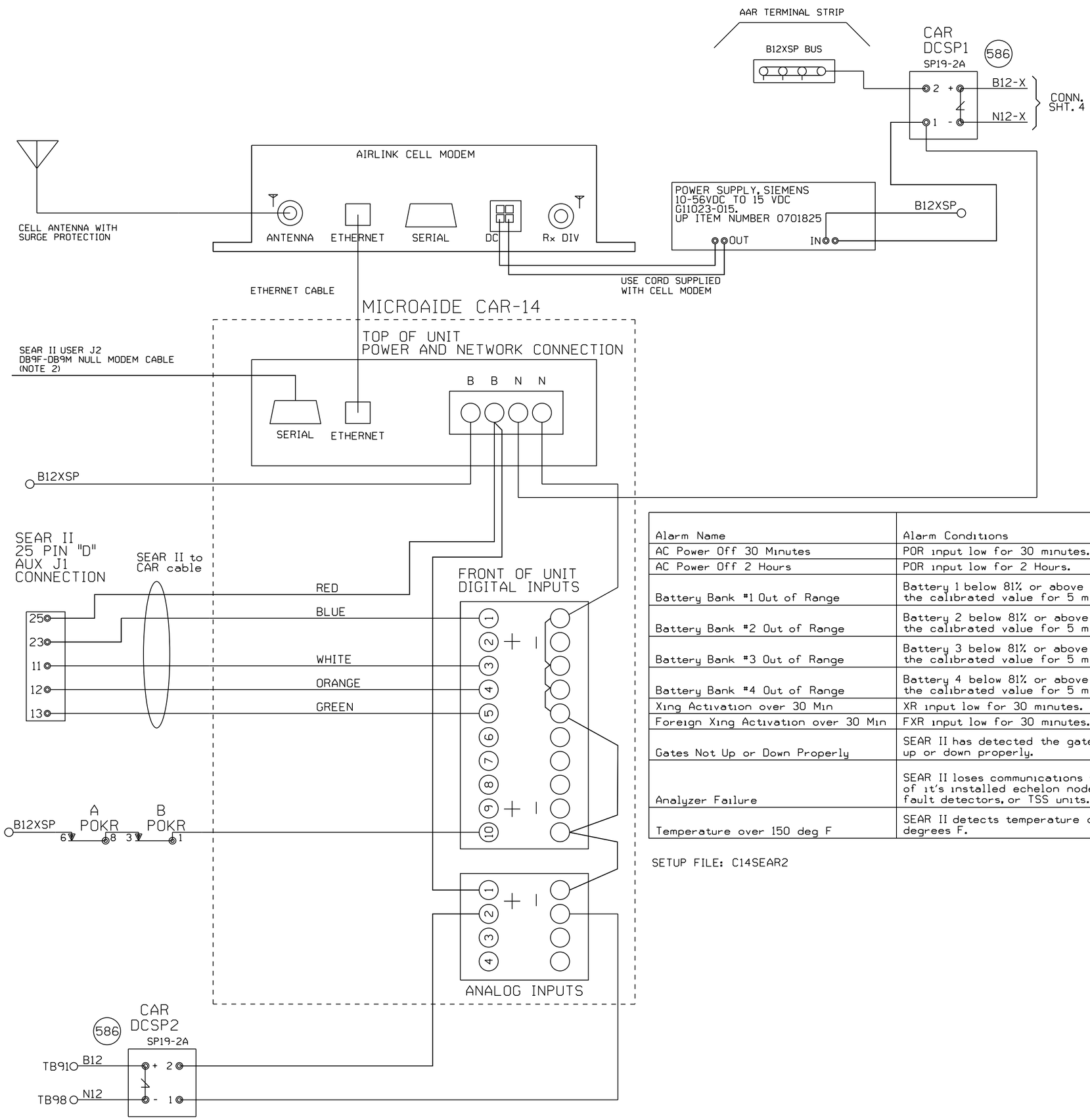

NOTE:
1) DO NOT JUMPER UNUSED INPUTS
2) THE CAR14 SERIAL PORT IS AVAILABLE TO ADD REMOTE CONNECTIVITY TO EXISTING LOGGING EQUIPMENT. USE NULL MODEM CABLE WITH SHIELDING DISCONNECTED AT ONE OR BOTH SIDES.

ANALOG INPUTS:
A1) B12X BATTERY BANK
A2) B12 BATTERY BANK
A3) BATTERY BANK 3
A4) BATTERY BANK 4

DIGITAL INPUTS
D1) XR (BLUE WIRE)
D2) FOREIGN XR
D3) ANALYZER FAILURE (WHITE WIRE)
D4) HIGH TEMPERATURE (ORANGE WIRE)
D5) GATES NOT UP OR DOWN PROPERLY (GREEN WIRE)
D10) POWER OFF INDICATION

Alarm Name	Alarm Conditions	Alarm Clearing Conditions	Cleared by Maintainer Mode?
AC Power Off 30 Minutes	POR input low for 30 minutes.	POR input high for 5 minutes.	No
AC Power Off 2 Hours	POR input low for 2 Hours.	POR input high for 5 minutes.	No
Battery Bank #1 Out of Range	Battery 1 below 81% or above 120% of the calibrated value for 5 minutes.	Battery 1 within acceptable range for 5 minutes.	No
Battery Bank #2 Out of Range	Battery 2 below 81% or above 120% of the calibrated value for 5 minutes.	Battery 2 within acceptable range for 5 minutes.	No
Battery Bank #3 Out of Range	Battery 3 below 81% or above 120% of the calibrated value for 5 minutes.	Battery 3 within acceptable range for 5 minutes.	No
Battery Bank #4 Out of Range	Battery 4 below 81% or above 120% of the calibrated value for 5 minutes.	Battery 4 within acceptable range for 5 minutes.	No
Xing Activation over 30 Min	XR input low for 30 minutes.	XR input high for 10 seconds.	Yes
Foreign Xing Activation over 30 Min	FXR input low for 30 minutes.	FXR input high for 10 seconds.	Yes
Gates Not Up or Down Properly	SEAR II has detected the gates are not up or down properly.	SEAR II has detected the gates are up or down properly.	No
Analyzer Failure	SEAR II loses communications with any of it's installed echelon nodes, ground fault detectors, or TSS units.	SEAR II has recovered after an analyzer failure alarm.	No
Temperature over 150 deg F	SEAR II detects temperature over 150 degrees F.	SEAR II sensor detects temperature is OK after a High-Temp alarm.	No

SETUP FILE: C14SEAR2

NEW SHEET

Designed: 4/28/14

INSTALL FLASHERS GATES AND CWT AT CANNON BALL TRAIL M.P.34.13

Rec#: WO#: 23707
IS: /MRN
/WJC/JTB

MODIFICATION LEVEL	
O. A. LAST LEVEL CHECKED	DU
LAST LEVEL MOD THIS TYPICAL	DU
LAST LEVEL BY DESIGNER	DU
CHANGED FROM TYPICAL?	Y

REV 01.24.11 4K ACDCCAR14SII.3

CIRCUIT MODIFICATIONS ARE NOT TO BE MADE WITHOUT AUTHORITY FROM THE OFFICE OF SIGNAL DESIGN

Date: 04/28/14
Des: WJC
Chk: CES
AFE: 23707

UNION PACIFIC RAILROAD
BUDA, ILLINOIS
CANNON BALL TRAIL
PEORIA SUBDIVISION
Office of AVP Engineering - Signal
Omaha, Nebraska

Sh.: 2A
DOT 175695W
MP: 34.13
ID: STL3413.2AX

STL3413.2AX 8/21/2014 10:40:42 AM

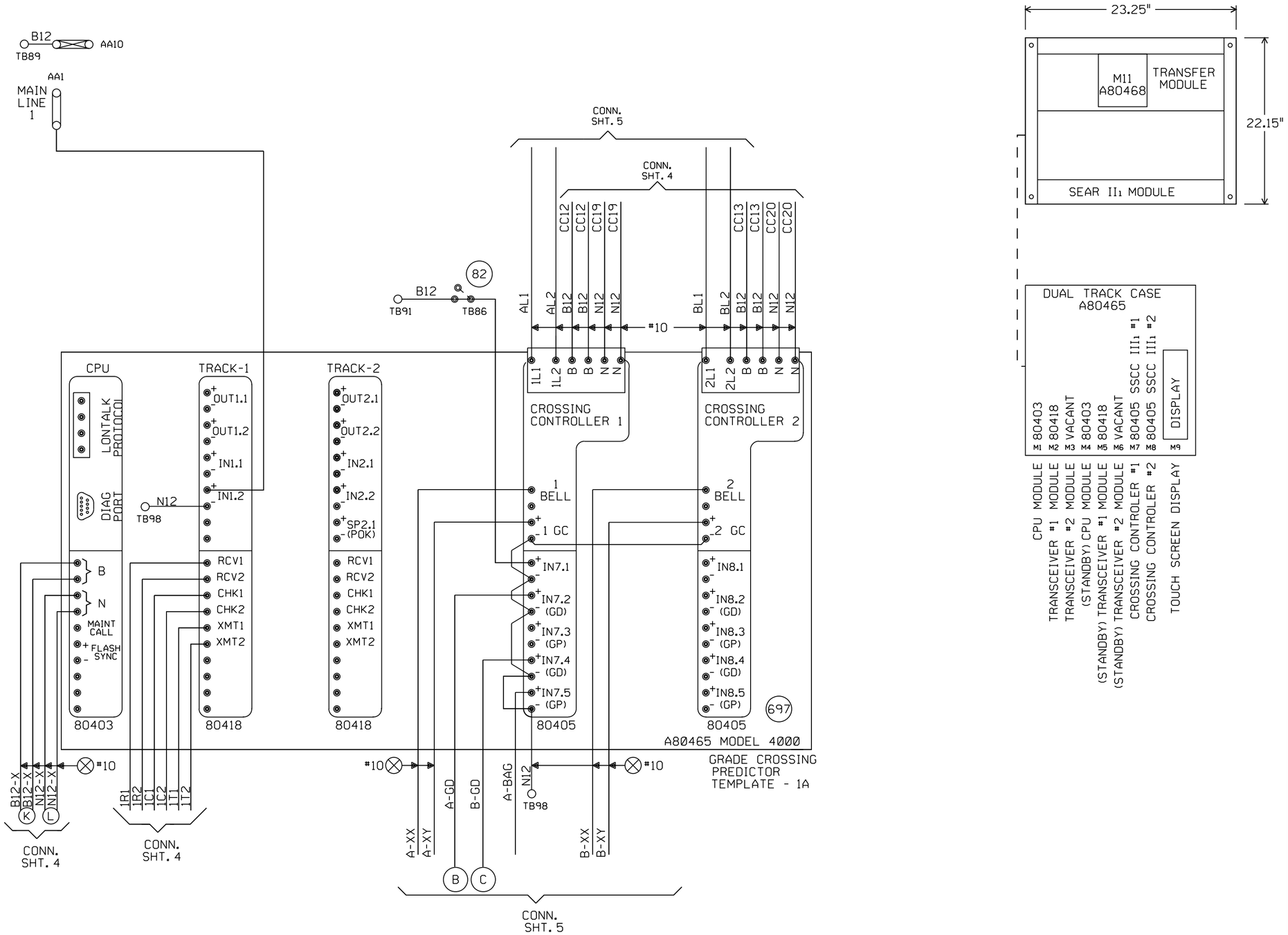

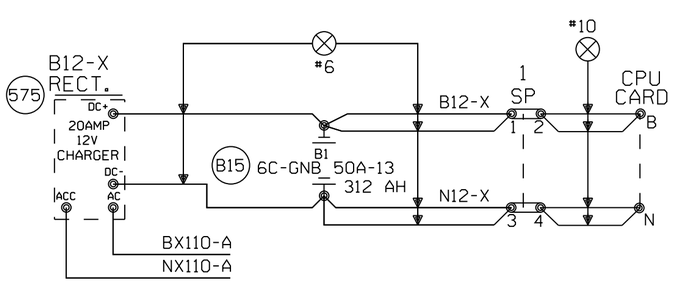

"Mf" FREQUENCY (HZ)	MAXIMUM TRANSMIT WIRE LENGTH (FEET)
86	100
114	125
156	150
211	200
285-970	250

NOTE:
EACH TRANSMITTER TO RAIL WIRE FROM XMT1 AND XMT2 MUST NOT EXCEED THE MAXIMUM LENGTH SPECIFIED IN THE TABLE SHOWN. THE RECEIVER WIRE LENGTH IS NOT CRITICAL. DOES NOT APPLY TO 6 TRACK WIRE APPLICATION.

~~NEW SHEET~~

Designed: 4/28/14
INSTALL FLASHERS GATES AND CWT AT CANNON BALL TRAIL M.P.34.13
Rec#: WO#: 23707
IS: /WJC/JTB

1 2/08/08
INSTALL ELECTROCODE FROM M.P. 20.00 TO M.P. 43.00 PHASE 2
A.F.E. 83394 DLD/RCB /SSS/RCB

MODIFICATION LEVEL	
Q.A. LAST LEVEL CHECKED	DQ
LAST LEVEL MOD THIS TYPICAL	DQ
LAST LEVEL BY DESIGNER	DQ
CHANGED FROM TYPICAL?	Y

REV 02.01.08 4K 2TKGF.3

CIRCUIT MODIFICATIONS ARE NOT TO BE MADE WITHOUT AUTHORITY FROM THE OFFICE OF SIGNAL DESIGN

Date: 2/08/08
Des: SSS
Chk: DLD
AFE: 83394

UNION PACIFIC RAILROAD
BUDA, ILLINOIS
TO I&M JCT., ILLINOIS
C.T.C. CIRCUITS
Office of AVP Engineering - Signal Omaha, Nebraska

Sh.: 3
DOT 175695W
MP: 34.13
ID: STL3413.3X

STL3413.3X 8/21/2014 10:40:50 AM

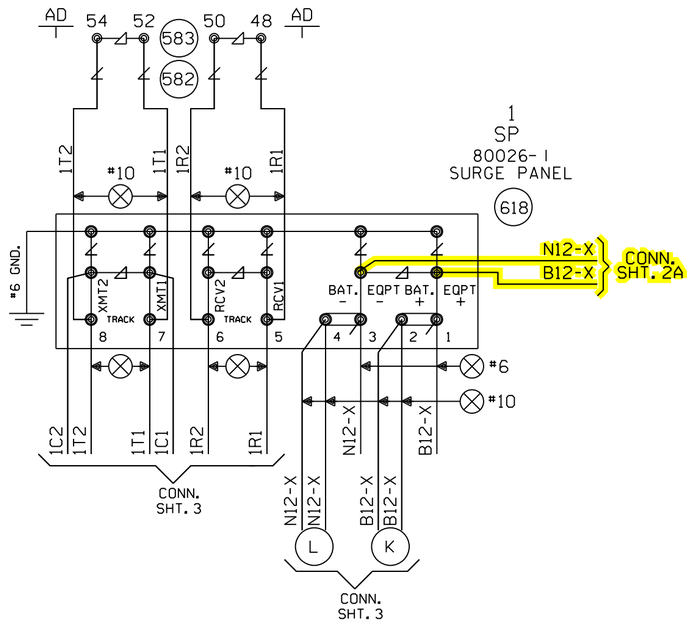

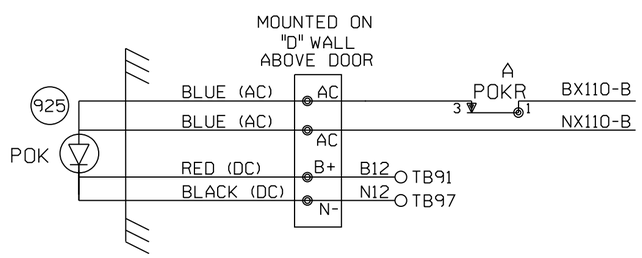

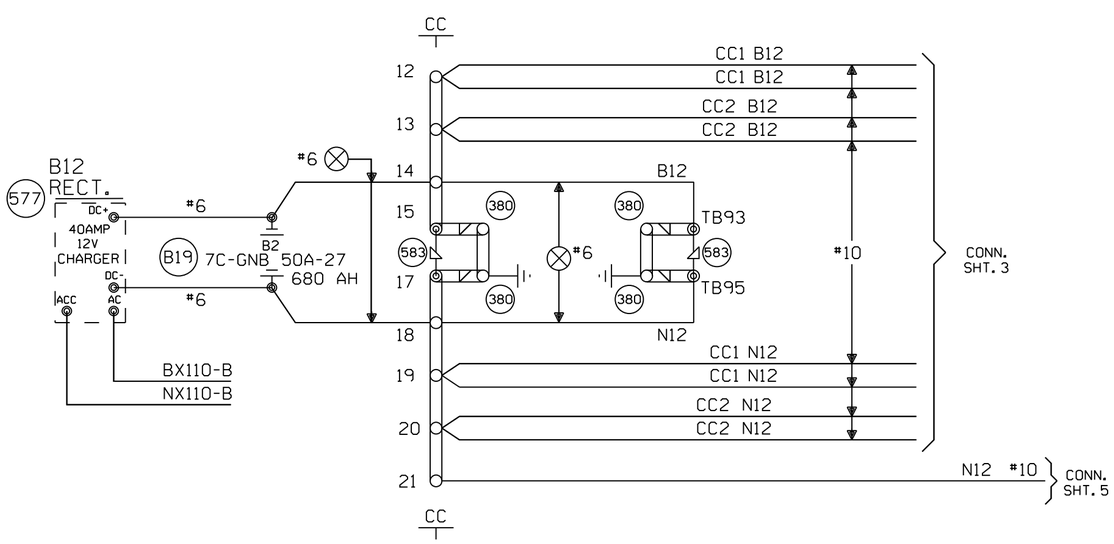

~~NEW SHEET~~

Designed: 4/28/14	1 2/08/08	MODIFICATION LEVEL	
INSTALL FLASHERS GATES AND CWT AT CANNON BALL TRAIL M.P.34.13	INSTALL ELECTROCODE FROM M.P. 20.00 TO M.P. 43.00 PHASE 2 A.F.E. 83394 DLD/RCB /SSS/RCB	Q.A. LAST LEVEL CHECKED	DQ
Rec#: 1S: / /WJC/JTB		LAST LEVEL MOD THIS TYPICAL	DQ
WO#: 23707 /		LAST LEVEL BY DESIGNER	DQ
		CHANGED FROM TYPICAL?	Y
		REV 02.01.08 4K 4TKSPGFC.4	

CIRCUIT MODIFICATIONS ARE NOT TO BE MADE WITHOUT AUTHORITY FROM THE OFFICE OF SIGNAL DESIGN

Date: 2/08/08
Des: SSS
Chk: DLD
AFE: 83394

UNION PACIFIC RAILROAD

BUDA, ILLINOIS
TO I&M JCT., ILLINOIS
C.T.C. CIRCUITS

Office of AVP Engineering - Signal — Omaha, Nebraska

Sh.: 4
DOT 175695W
MP: 34.13
ID: STL3413.4X

STL3413.4X 8/21/2014 10:40:54 AM

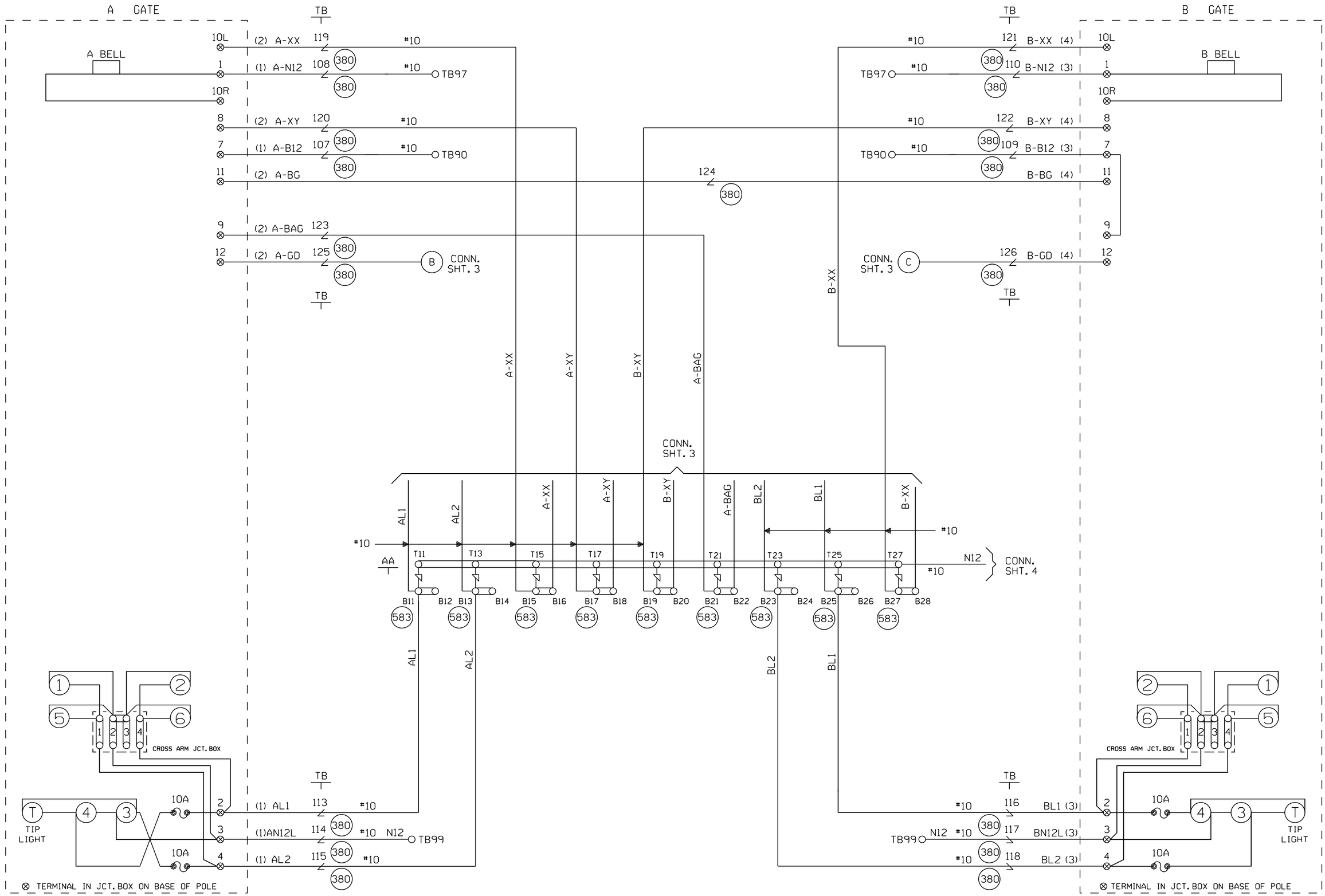

CABLE TABULATION

CABLE NO. 1 5C. NO.6 U.G.B.T.
CABLE NO. 2 7C. NO.14 U.G.B.T.
CABLE NO. 3 5C. NO.6 U.G.B.T.
CABLE NO. 4 7C. NO.14 U.G.B.T.

~~NEW SHEET~~

Designed: 4/28/14
INSTALL FLASHERS GATES AND CWT AT CANNON BALL TRAIL M.P.34.13
Rec#: IS:
WO#: 23707
/WJC/JTB

1 2/08/08
INSTALL ELECTROCODE FROM M.P. 20.00 TO M.P. 43.00 PHASE 2
A.F.E. 83394
DLD/RCB
/SSS/RCB

MODIFICATION LEVEL	
Q.A. LAST LEVEL CHECKED	DQ
LAST LEVEL MOD THIS TYPICAL	DQ
LAST LEVEL BY DESIGNER	DQ
CHANGED FROM TYPICAL?	Y

REV 02.01.08 4K GFSLTYP.5

CIRCUIT MODIFICATIONS ARE NOT TO BE MADE WITHOUT AUTHORITY FROM THE OFFICE OF SIGNAL DESIGN

Date: 2/08/08
Des: SSS
Chk: DLD
AFE: 83394

UNION PACIFIC RAILROAD

BUDA, ILLINOIS
TO I&M JCT., ILLINOIS
C.T.C. CIRCUITS

Office of AVP Engineering - Signal Omaha, Nebraska

Sh.: 5
DOT 175695W
MP: 34.13
ID: STL3413.5X

STL3413.5X 8/21/2014 10:40:58 AM

WCH 3597

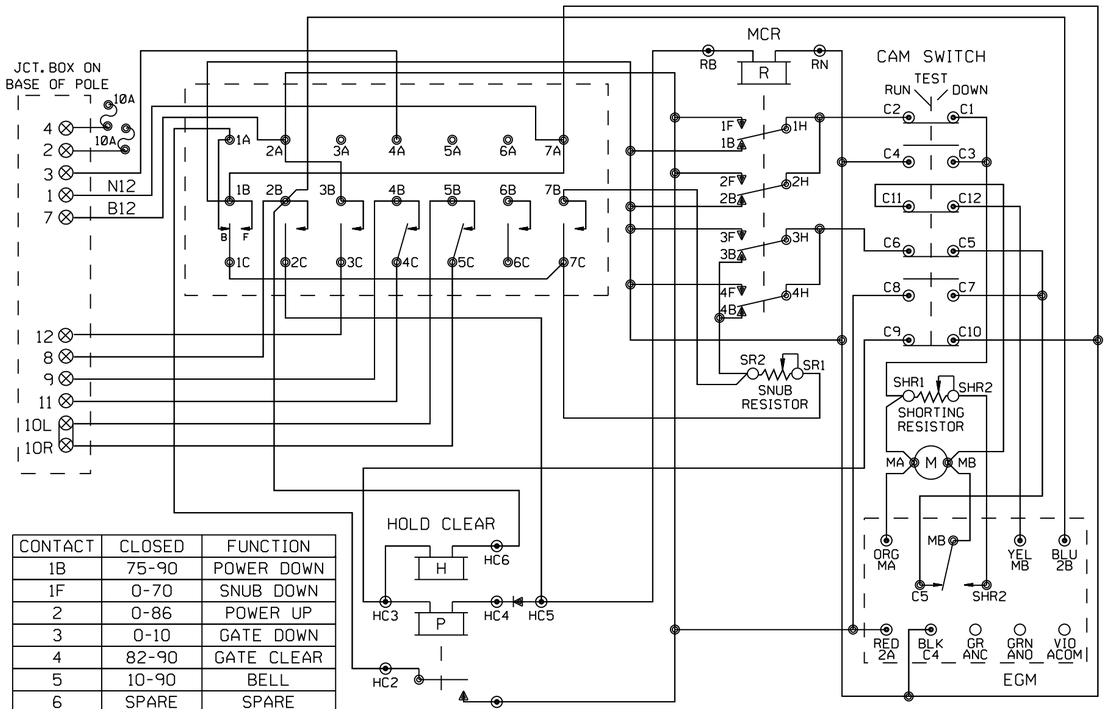

CONTACT	CLOSED	FUNCTION
1B	75-90	POWER DOWN
1F	0-70	SNUB DOWN
2	0-86	POWER UP
3	0-10	GATE DOWN
4	82-90	GATE CLEAR
5	10-90	BELL
6	SPARE	SPARE
7	0-10	SNUB

WCH 3597-RB

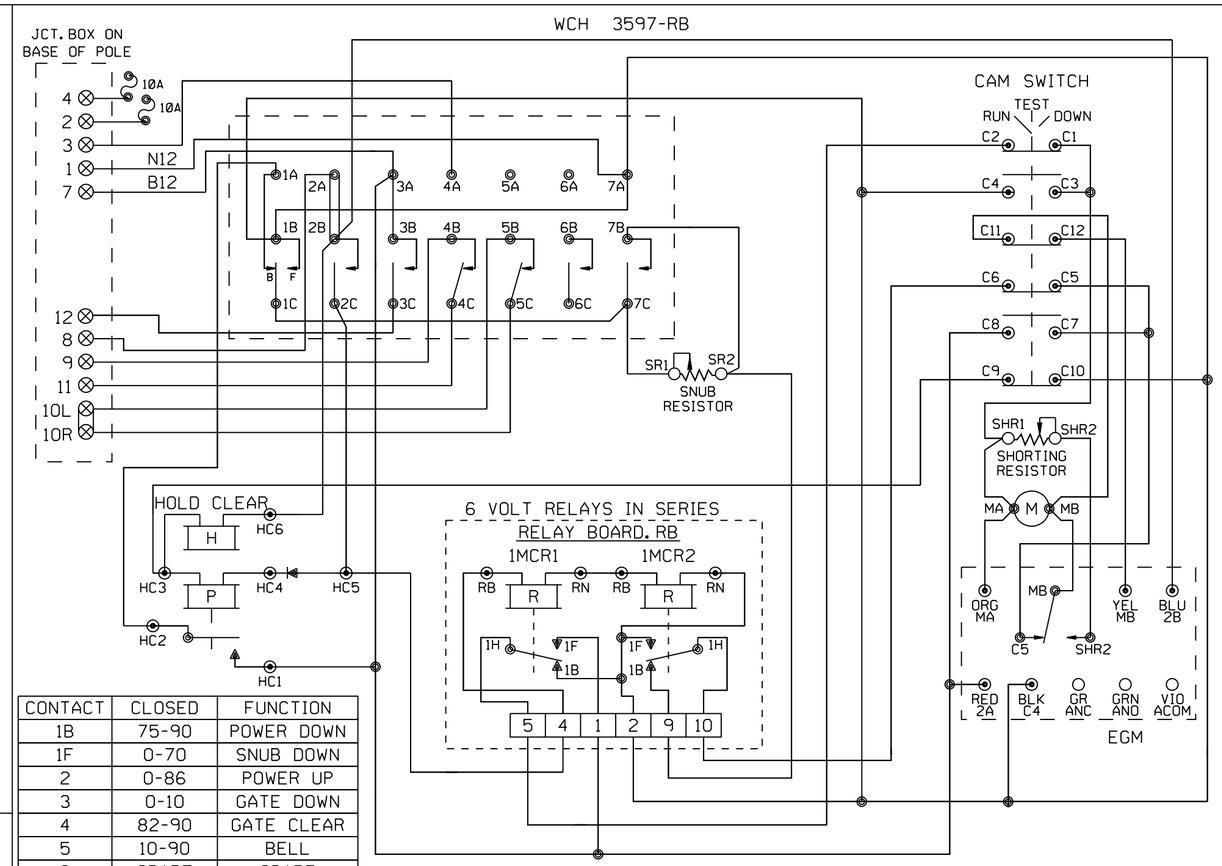

CONTACT	CLOSED	FUNCTION
1B	75-90	POWER DOWN
1F	0-70	SNUB DOWN
2	0-86	POWER UP
3	0-10	GATE DOWN
4	82-90	GATE CLEAR
5	10-90	BELL
6	SPARE	SPARE
7	0-10	SNUB

WCH 3593-E

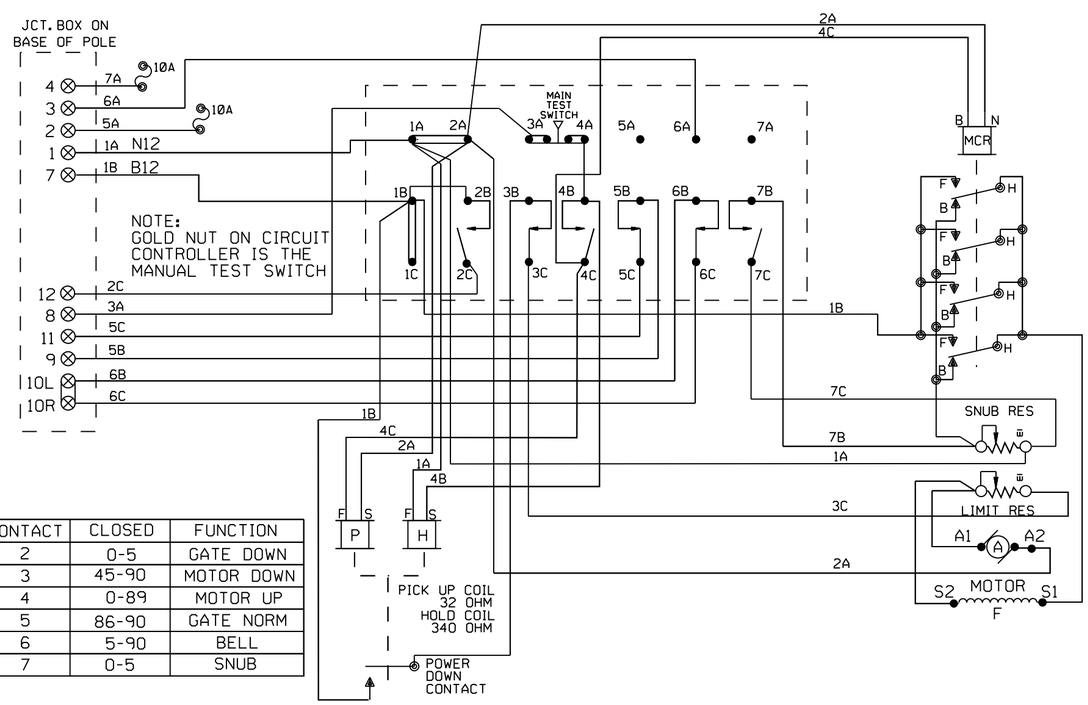

CONTACT	CLOSED	FUNCTION
2	0-5	GATE DOWN
3	45-90	MOTOR DOWN
4	0-89	MOTOR UP
5	86-90	GATE NORM
6	5-90	BELL
7	0-5	SNUB

SHOW TYPE MECH. INSTALLED

ALL MECHANISMS SHOWN IN THE CLEAR POSITION

JCT. BOX ON BASE POLE

L	R	L	R
1		7	
2		8	
3		9	
4		10	
5		11	
6		12	

WCH 3597-E

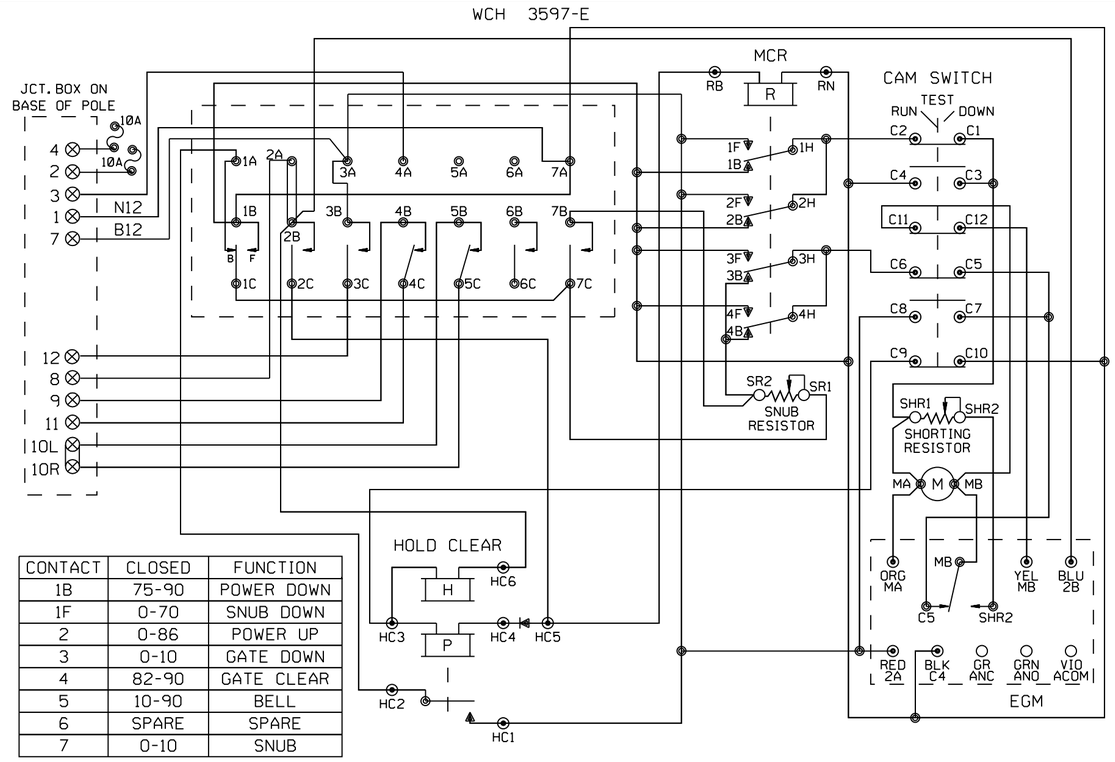

CONTACT	CLOSED	FUNCTION
1B	75-90	POWER DOWN
1F	0-70	SNUB DOWN
2	0-86	POWER UP
3	0-10	GATE DOWN
4	82-90	GATE CLEAR
5	10-90	BELL
6	SPARE	SPARE
7	0-10	SNUB

= IN

= OUT

~~NEW SHEET~~

Designed: 4/28/14

INSTALL FLASHERS GATES AND CWT AT CANNON BALL TRAIL M.P.34.13

Rec#: 15: WO#: 23707 /WJC/JTB

2/08/08 INSTALL ELECTROCODE FROM M.P. 20.00 TO M.P. 43.00 PHASE 2 A.F.E. 83394 DLD/RCB /SSS/RCB

MODIFICATION LEVEL	
O.A. LAST LEVEL CHECKED	DO
LAST LEVEL MOD THIS TYPICAL	DO
LAST LEVEL BY DESIGNER	DO
CHANGED FROM TYPICAL?	N

REV 02.01.08 4K GWIRING.DGN

CIRCUIT MODIFICATIONS ARE NOT TO BE MADE WITHOUT AUTHORITY FROM THE OFFICE OF SIGNAL DESIGN

Date: 2/08/08
Des: SSS
Chk: DLD
AFE: 83394

UNION PACIFIC RAILROAD

BUDA, ILLINOIS
TO I&M JCT., ILLINOIS
C.T.C. CIRCUITS

Office of AVP Engineering - Signal — Omaha, Nebraska

Sh.: 6
DOT 175695W
MP: 34.13
ID: STL3413.6X

STL3413.6X 8/21/2014 10:41:03 AM

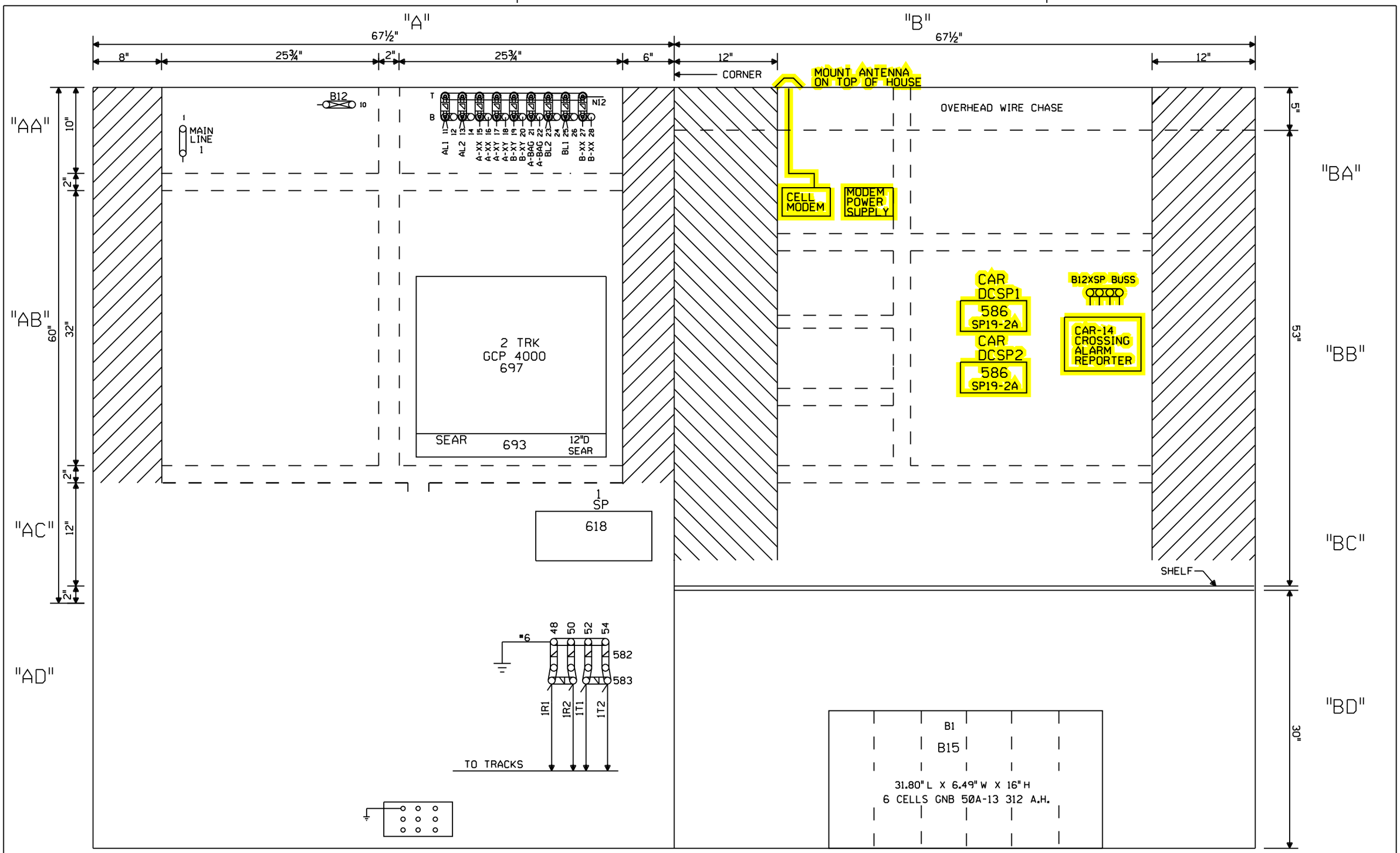

NOTE: ALL DIMENSIONS SHOWN ARE APPROXIMATE.

0 1 2 3 4 FEET

SCALE: 1.5 INCHES = 1 FOOT

= IN

= OUT

~~NEW SHEET~~

Designed: 4/28/14
INSTALL FLASHERS GATES AND CWT AT CANNON BALL TRAIL M.P.34.13
Rec'd: IS:
WO#: 23707
/WJC/JTB

2/08/08
INSTALL ELECTROCODE FROM M.P. 20.00 TO M.P. 43.00 PHASE 2 A.F.E. 83394
DLD/RCB
SSS/RCB

MODIFICATION LEVEL	
Q.A. LAST LEVEL CHECKED	DQ
LAST LEVEL MOD THIS TYPICAL	DQ
LAST LEVEL BY DESIGNER	DQ
CHANGED FROM TYPICAL?	Y

REV 02.01.08 4K 4TKGFC.8

CIRCUIT MODIFICATIONS ARE NOT TO BE MADE WITHOUT AUTHORITY FROM THE OFFICE OF SIGNAL DESIGN

Date: 2/08/08
Des: SSS
Chk: DLD
AFE: 83394

UNION PACIFIC RAILROAD
BUDA, ILLINOIS
TO I&M JCT., ILLINOIS
C.T.C. CIRCUITS
Office of AVP Engineering - Signal Omaha, Nebraska

Sh.: 7
DOT 175695W
MP: 34.13
ID: STL3413.7X

STL3413.7X 8/21/2014 10:41:07 AM

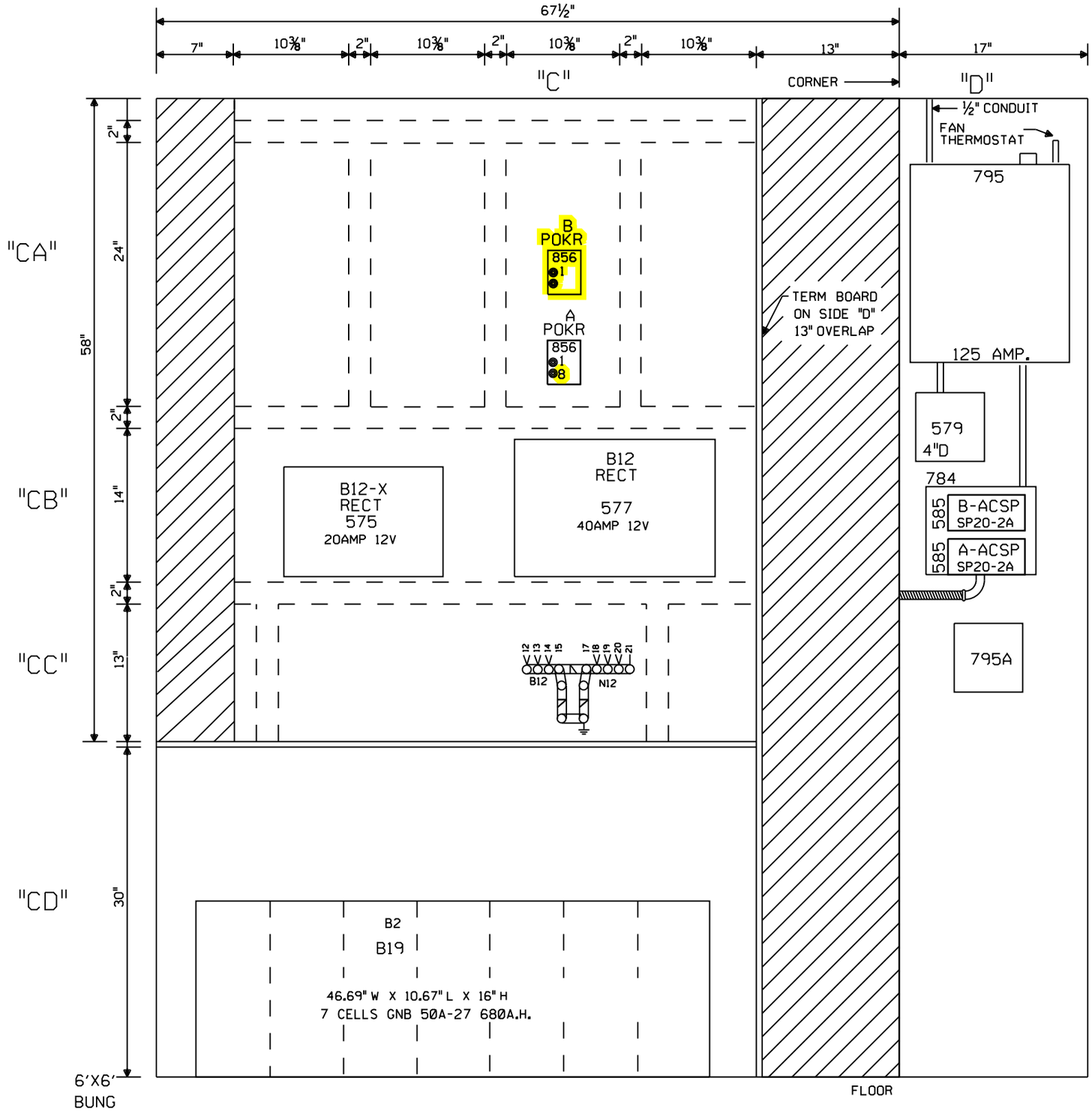

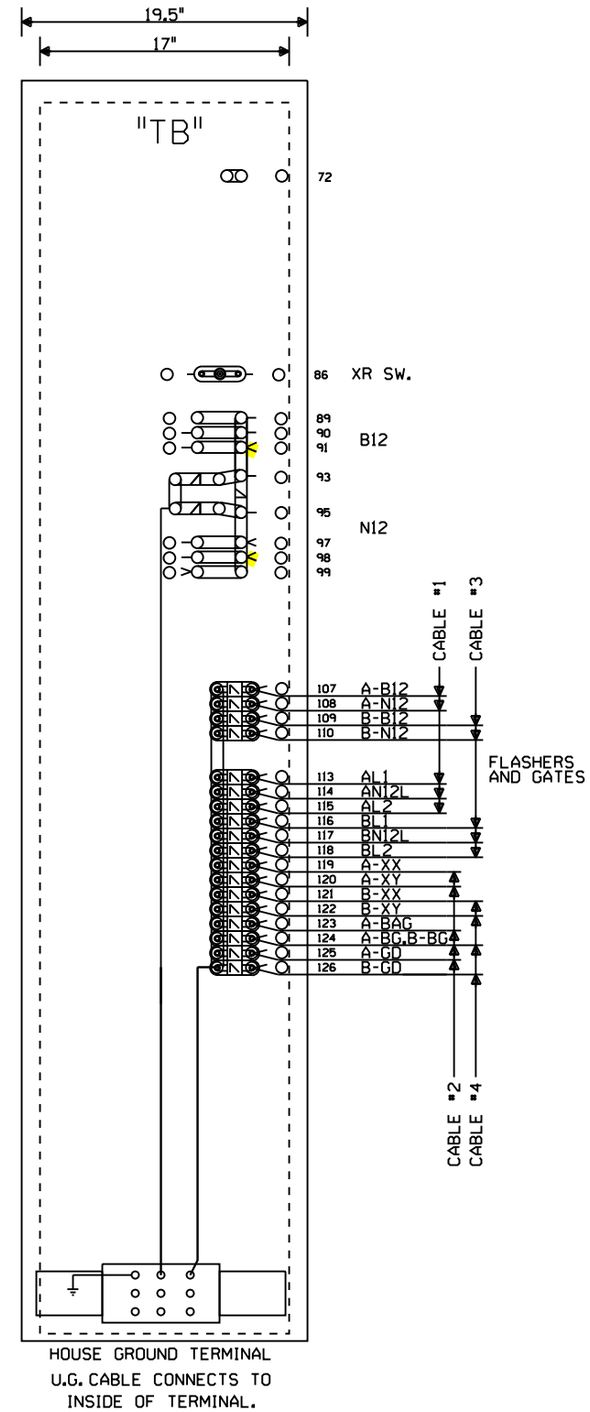

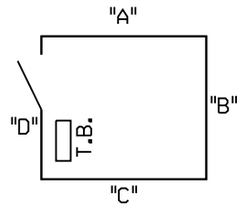

= IN

= OUT

NOTE: ALL DIMENSIONS SHOWN
ARE APPROXIMATE.

0 1 2 3 4 FEET

SCALE: 1.5 INCHES = 1 FOOT

~~NEW SHEET~~

Designed: 4/28/14
INSTALL FLASHERS GATES AND CWT AT CANNON BALL TRAIL M.P.34.13
Rec'd: IS:
WO#: 23707
/WJC/JTB

2/08/08
INSTALL ELECTROCODE FROM M.P. 20.00 TO M.P. 43.00 PHASE 2 A.F.E. 83394
DLD/RCB
SSS/RCB

MODIFICATION LEVEL	
O.A. LAST LEVEL CHECKED	DO
LAST LEVEL MOD THIS TYPICAL	DO
LAST LEVEL BY DESIGNER	DO
CHANGED FROM TYPICAL?	Y

Rev 02.01.08 4K GFC.9

CIRCUIT MODIFICATIONS ARE NOT TO BE MADE WITHOUT AUTHORITY FROM THE OFFICE OF SIGNAL DESIGN

Date: 2/08/08
Des: SSS
Chk: DLD
AFE: 83394

UNION PACIFIC RAILROAD

BUDA, ILLINOIS
TO I&M JCT., ILLINOIS
C.T.C. CIRCUITS

Office of AVP Engineering - Signal Omaha, Nebraska

Sh.: 8
DOT 175695W
MP: 34.13
ID: STL3413.8X

STL3413.8X 8/21/2014 10:41:11 AM