Grain Belt Express Exhibit 2.9
Page 1 of 12

The Moyle interconnector

Northern Ireland Electricity signed agreements in 1990 with ScottishPower, its counterpart in the south of Scotland, for the construction of an HVDC interconnector, known as the Moyle Interconnector, between the companies' transmission systems. After a protracted period in which all the necessary consents were obtained, contracts have been awarded and, following a construction period of only 27 months, the interconnector started commercial operation at the beginning of 2001.

by I. Atkinson, C. Harvey, M. Smith, P. Damgaard M. Haeusler, M. Kuhn, P. Lips, M. Wohlmuth, G. Balog and K. Stenseth

To increase the system reliability and availability the Moyle interconnector is equipped with innovative HVDC (high-voltage direct current) technology like direct light triggered thyristors and a modular redundant control system. Also a new design of the DC cable with an integrated return conductor is installed, combining the high voltage and the metallic return cable into a coaxial design.

Northern Ireland Electricity (NIE) the electricity transmission and distribution company for Northern Ireland, is a member of Viridian Group plc. In 1999, Moyle Interconnector plc (Moyle), another member of the Viridian Group was established to construct the link. The aim of the Moyle project is to deliver to customers the benefits of an interconnector that is economically viable, technically feasible and environmentally acceptable. This required:

- An appraisal of the engineering options available in order to optimise an electrical interconnection between the electricity systems of Scotland and Northern Ireland that meets the requisite reliability and availability.
- Minimising the environmental impact of the electrical interconnection by identification followed by elimination or acceptable mitigation of the impact
- Going to the HVDC market to obtain a competitive price for an optimised solution that will stand the test of an economical appraisal by the regulatory authority, which allows a revenue stream to meet the capital investment in an evolving electricity market.

The Moyle interconnector started to transmit power between the electricity systems in Ireland and Great Britain at the beginning of 2002 (see Fig. 1). It provides Northern Ireland with an important new source of electricity supply, promoting competition in the emerging markets in Northern Ireland and the Republic of Ireland and enhancing security and quality of supply. The overall project costs were approximately £150 million. The project was sponsored with a contribution of £52·5 million

1 The Moyle interconnector is connecting the island of Ireland to the British grid and, through it, to the central European grid

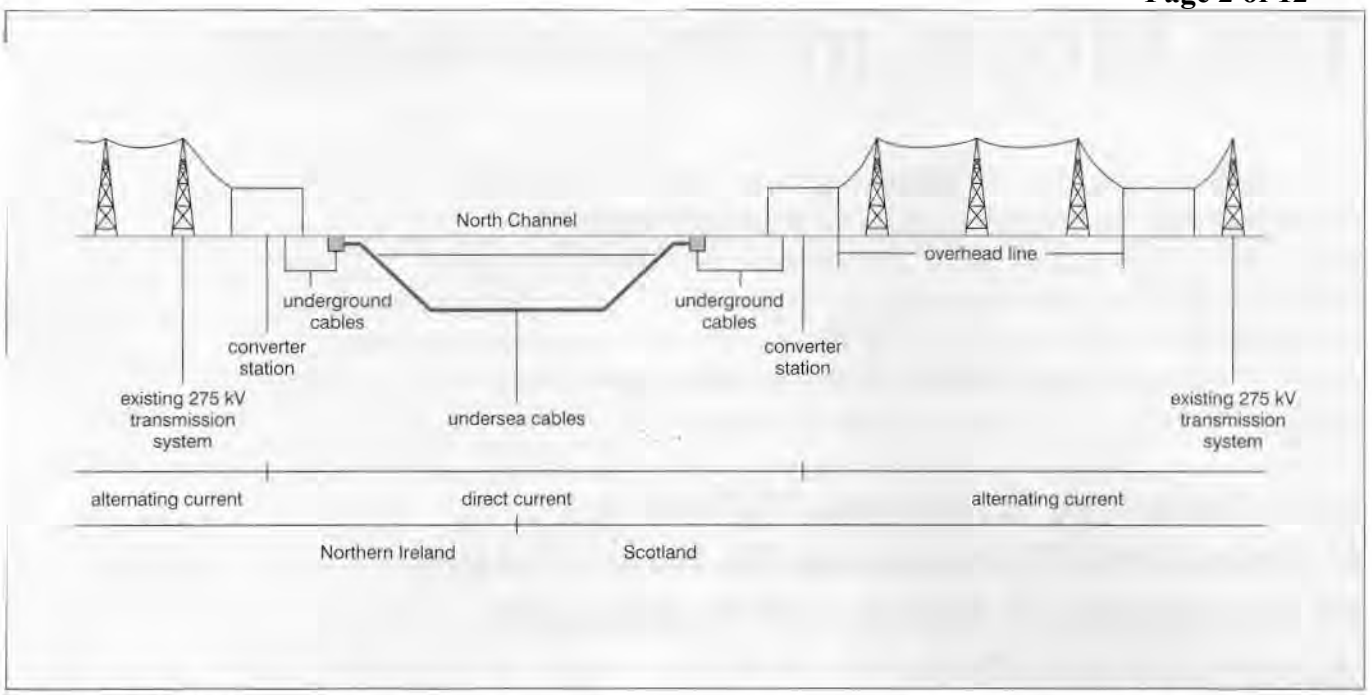

2 Elements of the Moyle interconnector

by the European Regional Development Fund.

The implementation of the Moyle interconnector involved the construction of 64 km of 275 kV AC overhead line in Scotland, HVDC converter stations in Scotland and Northern Ireland, underground DC cables from each station to the coast and the installation and protection of two 55 km subsea DC cable (Fig. 2).

The elements that make up the Moyle interconnector project are required to be technically feasible, reliable and economically viable. They also require to be designed, constructed and operated taking into account environmental considerations. As imports over the interconnection will represent a significant proportion of the Northern Ireland system demand, the design of the link must ensure that quality of supply experienced by customers will be at least as good with the interconnection in service as prior to its introduction. A main criterion influencing the interconnector design was that its performance in reliability and availability terms should be no worse than that of an equivalent sized onshore modern generating unit.

Project considerations

The electricity system in Northern Ireland, serving a population of around 1·6 million, is a self-contained system for the generation, transmission and distribution of electricity. The north-south interconnector between the systems of Northern Ireland and the Republic of Ireland was restored in March 1995 after being out of service for 20 years. The restoration enables the Northern Ireland system to become part of a system approximately three times the size when isolated. Therefore the restrictions determining the maximum capacity of a single infeed into an isolated system were relaxed. Future enhancement of the connections between Northern Ireland and the Republic of Ireland will further relax these restrictions. The electricity system in Scotland is part of the large interconnected British and Western European systems.[1,2]

Electrical interconnection between Scotland and Northern Ireland has been under consideration for more than 30 years. Early feasibility studies established that direct current interconnection was superior to alternating current interconnection from both the technical and the economic points of view. There have also been considerable technical advances in direct current technology over the intervening period so that present-day advantages of DC interconnection outweigh those of AC interconnection.

The design for the Moyle interconnector was influenced by both environmental and system considerations. From the viewpoint of the Northern Ireland system, the main consideration was obtaining the reliability and availability required by an island system dependent on the DC link for approximately 20% of its total demand at any time.

The location of the 275 kV transmission systems and associated substations in Scotland and Northern Ireland determined the general area in which interconnector route options could be developed. Various undersea cable routes between Northern Ireland and Scotland were ruled out for different reasons, such as high sea currents, deepness of the seabed, exposed bedrock indicating a very hostile environment for undersea cables, post war dumping of munitions as well as for reliability and environmental reasons regarding the enormous length of overhead line sections required in Scotland and Northern Ireland. The overhead line route selection, the seabed route selection and the landfall evaluation, together with the underground cable route selection and converter station site selection, were developed and co-ordinated towards selecting a preferred route for the interconnector. In order to meet the objective that the project should create the least disturbance to the environment, the effects of the total route on the environment and its users were studied and as far as possible minimised. The preferred route was further refined after consultation with local authorities, statutory consultees and affected parties.

An environmental consultant was commissioned to assess the environmental effects of all the elements of the interconnector. The necessary detailed studies were undertaken by the companies' own experts or by outside specialists. Landscape architects using modern computer graphics techniques were deeply involved in the identification of route and site options, the assessment of the visual and landscape effects of such options and development of mitigative measures. Studies of ecology, archaeology, forestry and tourism and recreation, together with noise surveys and an assessment of electric and magnetic field strengths, were undertaken by specialists. The undersea aspects of the interconnector, including marine biology, war graves, shipwrecks and safety to mariners, were studied. The overall assessment was presented in three separate documents: environmental statement covering the Scottish elements, environmental appraisal covering the undersea elements and environmental statement covering the Northern Ireland elements. A compromise between environmental, technical and economic factors was achieved in order to find the best route for the interconnector.[5]

Applications for the various consents in Northern Ireland and Scotland were made in December 1993. Public inquires were held in the relevant jurisdictions with full consent granted in Scotland for the overhead line and outline consent for the converter station at Auchencrosh in October 1997. In Northern Ireland the application for the first converter station site was refused and after an application was made for another site on Island Magee, outline consent was granted for BallycronanMore converter station in June 1998.

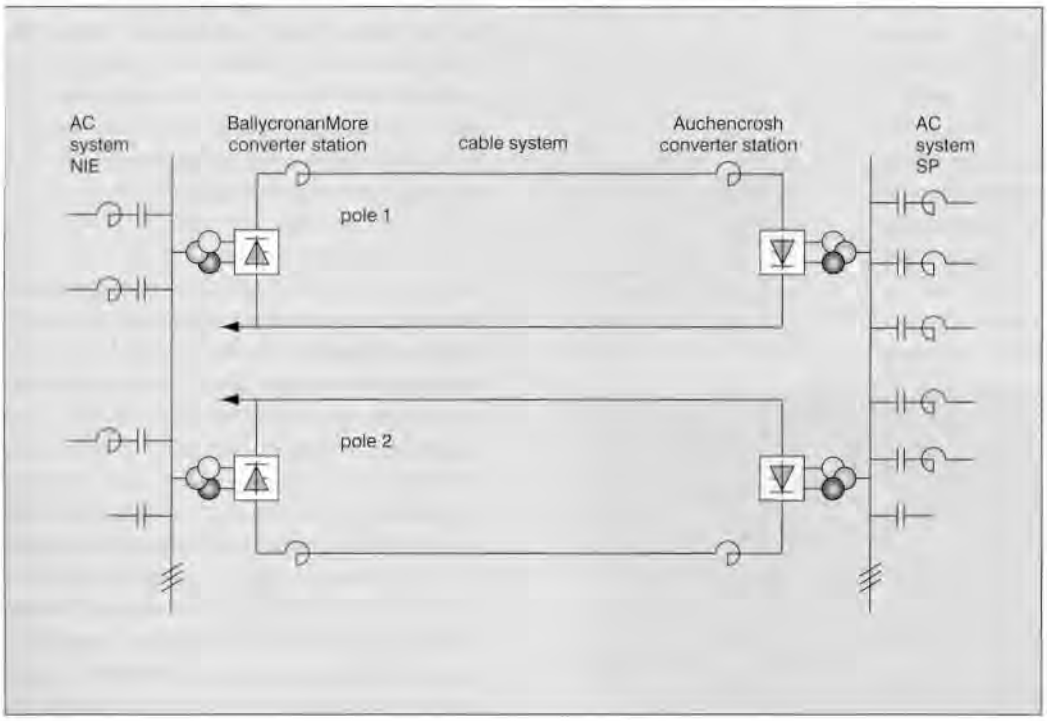

3 The Moyle interconnector, configured as dual monopole with a capacity of 2 × 250 MW

Detailed planning permission for both converter stations was not finally granted until March 2000. The main elements of the optimised interconnector could then be determined (Fig. 2).

Design and implementation

The configuration of the Moyle interconnector consists of two monopolar submarine HVDC cable links operating in parallel on the AC systems (Fig. 3). The converters have a power rating of 2×250 MW in either direction, referenced at the rectifier station. The DC operating voltage of each monopole is 250 kV, the AC sides of the converters are connected to the 275 kV networks of Northern Ireland Electricity and Scottish Power, respectively. The nominal direct current is 1000 A per monopole. Each DC cable system, which connects the two converter stations, consists of 55 km of subsea cable and 8·5 km of underground cable. The cable system is of the integrated return conductor (IRC) type, where the return cable is integrated into the HVDC cable, i.e. a metallic coaxial layer integrated in the cable forms the return path for the current.

4 BallycronanMore converter station

When going out to the market for the construction contracts, Moyle had sought tenders for alternative link capacities of 250 MW and 2×250 MW. Working closely with the leading tenderers, Moyle was able to obtain excellent value for money and to contract for a 2×250 MW capacity link within the original budget with no additional environmental impact. Contracts were awarded for all the elements of the project. At the end of 1999 Moyle awarded turnkey contracts to:

- Siemens for the design, installation and commissioning of the HVDC converter stations linking the interconnector to the transmission systems in Northern Ireland and Scotland. The stations will be located at BallycronanMore, Island Magee, Co Antrim, Northern Ireland, and at Auchencrosh, Ayrshire, Scotland (Fig. 1).
- Nexans Norge AS for the submarine and underground cables, which connect the two converter stations. This includes 8·5 km of underground cable route connecting the converter stations to the landfalls at Currarie Port in Scotland and Portmuck South in Northern Ireland and 55 km of undersea cable route.

At the beginning of year 2000 ScottishPower awarded a contract to Balfour Kilpatrick Ltd. for 64 km of 275 kV single circuit overhead line from the existing Coylton substation to the converter station at Auchencrosh, using flat formation towers of 25 m standard height and 360 m nominal span.

Converter stations

Both converter stations have identical designs except for the AC switchyards and the AC filters.[3] Each converter station consists of two valve halls (one for each monopole), with the control building in between (Fig. 4).

Adjacent to each valve hall is a DC hall, in which the DC switchyard including the measuring equipment, the smoothing reactor and the cable sealing end, are located. The AC switchyard in BallycronanMore converter station is designed as a double busbar arrangement fed by the existing 275 kV transmission system. Both outdoor switchyards are designed for a short-circuit current of 31·5 kA and a specific insulator creepage distance of 31 mm/kV.

Converter transformers

The transformers are of the single-phase three-winding type rated 96/48/48 MVA each. A tap-changer with eight 1·25 % steps is used to keep the valve side voltage at the ideal value. The transformers are located directly adjacent to the valve hall with their dry-type valve side bushings penetrating the valve hall walls. It is not necessary to install separate DC wall bushings with this arrangement.

Filter arrangement

For the Moyle interconnector, triple-tuned AC filters were installed, where another resonance circuit is placed in series to the well known double-tuned filter arrangement. As main advantages this filter concept provides an improved harmonic filtering performance, optimised space requirements and minimum high-voltage equipment (HV capacitor and circuit breaker). Three triple-tuned AC filters rated at 59 Mvar each and tuned to the 3/12/24 harmonics in combination with one 59 Mvar shunt capacitor cover the similar demands on reactive power and harmonic currents filtering of both stations. To compensate for the reactive

power demand of the 64 km transmission line in Scotland, two 59 Mvar filters tuned to the 12 harmonic have been installed additionally in Auchencrosh. Each filter branch can be switched individually by means of circuit breakers with two interrupter units. This design satisfies both the maximum limit of switching overvoltage and the requirements on the harmonic currents suppression. Since both converters are directly connected to the DC cable system, there is no need for a DC filter.

5 View into an LTT thyristor modular unit including two valve sections during assembling

Smoothing reactor

A smoothing reactor rated at 200 mH is installed in each DC hall to smooth the direct current and to limit the overcurrent in the cable system during faults. The smoothing reactor is of the air insulated type. In combination with the dry type bushings of the converter transformers and the carefully selected fire-resistant materials in the converter valves this reduces the risk of catastrophic damage by fire considerably.

Direct current measuring system

A reliable HVDC transmission system requires an adequate measurement of the direct current at several locations in each station. The measured direct current is used in the fast converter firing angle control loop and for protection functions. The hybrid-optical system uses an ohmic shunt, which is integrated into the DC circuit. The voltage drop across the shunt is proportional to the direct current. This signal is measured and digitised by an electronic circuit located at high-voltage potential. The measured signal is transmitted as a serial telegram via a fibre-optic link to ground potential.

This technology significantly reduces weight, provides an inherent protection against electromagnetic interference, an excellent performance and increases the overall system availability.[3]

Thyristor valves

The arrangement of the thyristor valves is three branches with a quadruple valve in each branch fed from a single-phase three-winding transformer. Each quadruple valve consists of four identical single valves connected in series. The quadruple valves are suspended from the ceiling of the valve hall with the high-voltage connections at the bottom (Fig. 5).

Due to the excellent operating performance demonstrated in the Pacific intertie, the converter stations could be equipped with the most modern technology of direct light-triggered thyristors (LTT) including integrated overvoltage protection.[4]

Valve design

The valves are based on the same electrical and mechanical design features as electrically triggered valves used in earlier systems, including:

- a hierarchical modular structure
- water cooling of all heat-producing components with parallel cooling circuits at all levels
- wire-in-water technology for the snubber resistors
- exclusive use of fire-retardant insulating material and wide spacing for thermal separation of components.

Considering the transmission voltage of 250 kV DC and the performance requirements, a series connection of 39 series connected 8 kV LTT thyristors per valve was chosen, arranged in three valve sections of 13 thyristor levels each. Two valve sections are mechanically combined into one modular unit (Fig. 5).

The sizing and rating of the valve damping and voltage grading circuits (snubber circuits) is not different from earlier designs using electrically triggered thyristors (ETTs), since the electrical parameters of 8 kV LTTs and ETTs are practically the same with one exception: the increased *di/dt* capability of the LTT allowed the reduction of the number of standard reactors per valve section from four to three.

Triggering and monitoring

Direct-light-triggered thyristors with integrated overvoltage protection do not require auxiliary energy nor electronic logic circuits for protection at high potential. Instead, the light trigger pulse generated at ground potential is applied directly to the thyristor gate (Fig. 6).

6 Artist's rendering of opened LTT with fibre-optic cable illustrating the transmission of the firing pulse to the gate

Similarly, information on the status of the thyristor

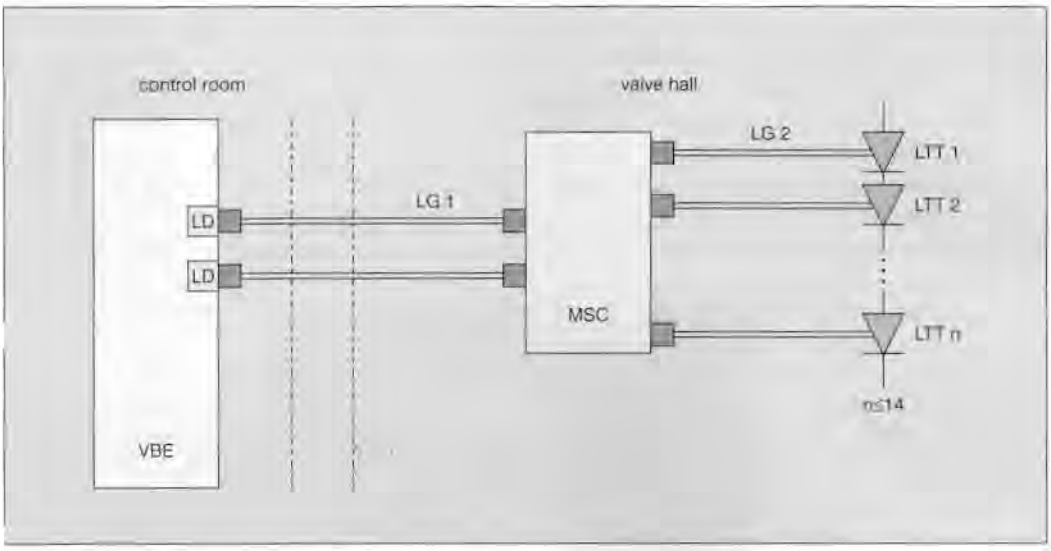

7 Schematic of LTT trigger pulse transmission (explanations in the text)

level as obtained from a voltage divider is transmitted to ground potential using an infrared diode without the need for auxiliary power. The information from each thyristor level is then evaluated in the valve base electronics (VBE) and provides the same level of diagnostics as is known for ETT technology.

In conventional ETT technology, it is general practice to use one fibre-optic cable per thyristor level to transmit triggering information in one step from ground potential to the thyristor electronics. For LTT valves, a different approach is more appropriate (Fig. 7).

The trigger pulses for the thyristors in a complete valve section are generated by redundant laser diodes (LD) and transmitted to the modular unit through separate fibre-optic cables (LG1). At this point, the redundant channels are combined in a multimode star coupler (MSC) and are then spread out to the individual thyristors of the section through separate fibres (LG2). In this way, the number of active optical components in the triggering system as well as the number of long fibres from the control equipment to the high-voltage potential in the valves is considerably reduced. Naturally, there still need to be individual fibres per thyristor level for monitoring purposes.

The multimode star coupler is a standard device in the communications industry when optics technology is used. Fig. 8 shows a typical example with the cover removed.

It is obvious that the MSC is a purely passive device that can best be compared to a soldered wire connection. The fibre-optic cables from the VBE terminate at the plug connectors seen at the lower left, while the cables continuing to the individual thyristors are connected at the lower right.

Redundancy considerations

For reliable operation of HVDC converter stations, parallel redundancy is included for all control and protection circuits at ground potential including the VBE and redundant series-connected thyristor levels are included in the valve. Since each thyristor has its individual firing and monitoring, this is part of the series redundancy.

Somewhere between the VBE and the individual thyristor levels there needs to be a transition from parallel redundancy to series redundancy. There are basically three possibilities:

(i) At the output of the VBE in an optical interface using infrared diodes, that are each feeding a fibre-optic cable which connects to the gate electronic of one thyristor level (ETT only). Here, the infra-red emitting diodes (IREDs) are part of the series redundancy of the valve; the transition from parallel to series redundancy is in the electronic switches for activating the IREDs and thus relies on active devices.

(ii) The IREDs can be included in the parallel redundancy of the VBE by statistically mixing the individual fibres of a number of cables into a bundle at the ground end and then splitting the combined cable into two, which are connected to one light source each. With this method, the transition from parallel to series redundancy is now in the mixing point of the fibre-optic cables—comparable to hard wiring and not depending on active components. One fibre-optic cable per thyristor from the VBE is still required.

(iii) An additional improvement and simplification is made in the LTT technology (Fig. 7). With this method, the transition from parallel to series redundancy is left in the passive, 'hard wired' fibre optic system. However, the number of long cables from ground to high voltage potential is greatly reduced, resulting in a lower risk of damage.

8 Inside of a multimode star coupler unit showing the coupling device (top) and the internal fibre-optic connections to the plug connectors at the bottom

Testing

According to the project specification, type/design tests were to be performed according to IEEE 857, 1990. That document specifies dielectric tests on the valve base, a single valve, a multiple valve, and operational tests on valve sections. The operational tests were performed in the synthetic test circuit available in the factory, which imposes stresses that are equal to or higher than the worst conditions that can be expected in service. Throughout the whole test series, there was no failure or degradation of any kind.

Cable concept

Up to the present many submarine DC links have operated in the monopolar mode, where a single cable or overhead line constituted the high-voltage carrying component while the return current flowed through the soil or sea water. In the last decade, in connection with monopolar DC transmission in some cases stray currents were detected far from the electrodes on land. Expensive intervention had to be used to eliminate excessive corrosion on pipelines and other long metallic installations in such areas. It has been asserted that sea electrodes produce large amounts of chlorinated organic compounds and that the magnetic fields from the cable have negative influence on marine life. All in all the deployment of electrodes is time consuming, costly and meets large environmental resistance.

Against this background the idea of integrating the return conductor into the cable was born. By applying the return conductor concentrically around the main conductor, outside the lead sheath, the following major goals are satisfied:

- the core is a conventional mass-impregnated cable core
- the return conductor insulation may be of different material from the main insulation
- there is no external magnetic field
- the laying properties are as for a conventional cable
- the return conductor is also part of the armouring.

To keep the return current in the return conductor it has to be insulated from the ground.

Cable design

The cable requirements for the Moyle project are transmission of 250 MW at 250 kV across a total distance of 63 km, 3 + 5 km on land and greatest submarine depth of 160 m.

From the idea of integrating the return conductor (RC) into the cable there are several steps before the design is established. The first step is to analyse the system in view of the probable stresses. As the core is a conventional mass-impregnated cable core, only the additional heating from the losses in the return conductor has to be taken into account for dimensioning the conductors. As the return conductor may be earthed at one end only,

9 Valve hall of BallycronanMore converter station with LTT quadruple valves assembled on site

the stationary DC voltage at full load was calculated to be approximately 1 kV on the other end. To study the transient behaviour of the design, an equivalent diagram was established (Fig. 10).

The transient analysis showed a low induced sheath voltage from atmospheric transients. However, in this case the end terminals are located indoors, so the only transients are the ones generated by the converters. Most of the converter-generated transients occur rather infrequently. Commutation failure and bushing flashover type of faults are most common. The transients are of the dampened oscillating type and the voltage induced by them on the RC is even lower.

Based on the above, the return conductor insulation was designed to satisfy the requirements of IEC 60229. A layer of steel armour outside the RC insulation acts both as a mechanical protection of the insulation and together with the return conductor as a torsionally balanced longitudinal load member.

The rest of the design is as for a conventional mass-impregnated cable. The insulation thickness is 11·5 mm giving a maximum electrical stress at full load of 26·5 kV/mm.

In addition a fibre-optic (FO) element with six fibres was integrated into the power cable. The FO element was placed into the extruded plastic sheath, in contact with the lead sheath. The plastic sheath thickness is increased so it has the nominal thickness also over the FO part. The placing of the FO part in that position is the result of a project where both the properties of the fibres during cable handling and the jointing technique of the fibres were developed. The cable systems are also equipped with a single-point temperature measurement system at each side.

The cross-section of the resulting design is shown in Fig. 11. The cable outer diameter is 115 mm and the weight is 400 N/m. At full load the losses are 36 kW/km.

The design of land and submarine cables is identical. This reduces the spare cable necessary and allows long lengths to be pulled onshore.

Joints and terminations

The jointing technique of mass-impregnated cables has been refined and it is a well-known technology. State of the art is 500 kV, flexible repair joints mechanically tested to 500 m water depth according to the CIGRE recommendations. In this case the development of the return conductor insulation required most effort. The jointing method is replacing the insulation across the joint by longitudinally split tubes of the same material and welding the grooves with a specially designed extruder, and thereafter welding the tube to the cable by a circumferential weld. The extra material is removed from the weld and the overall diameter is not increased in the process.

The termination is of the conventional pressurised type to ensure internal overpressure. The lead sheath, return conductor and also the steel tube of the FO cable may carry potentially high voltage and they have to be terminated on a platform, isolated from earth and protected from unintentional touching. Also the steel tube of the FO cable and

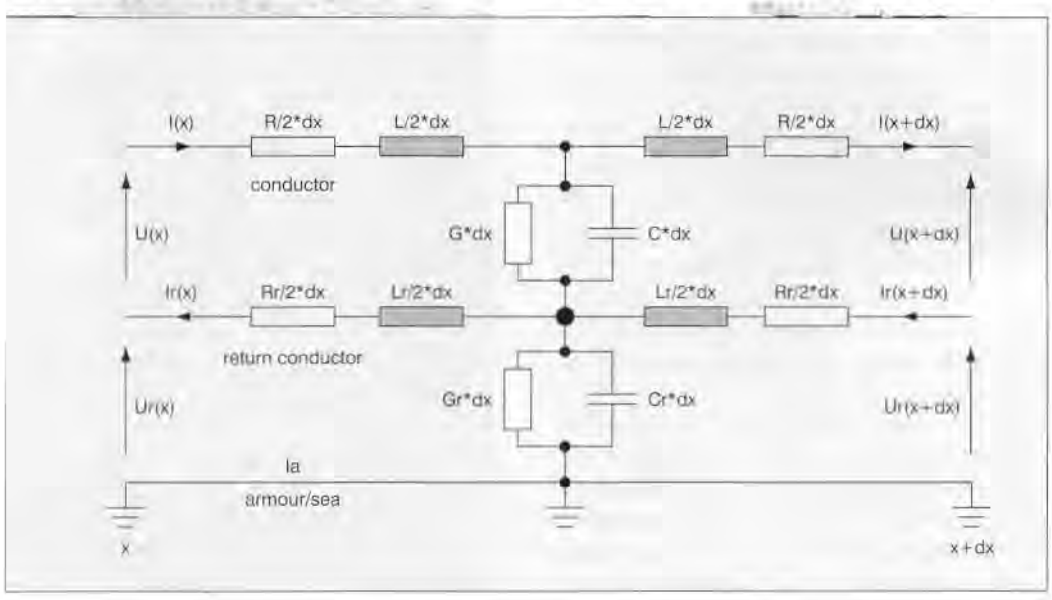

10 Unit length equivalent diagram for transient analysis

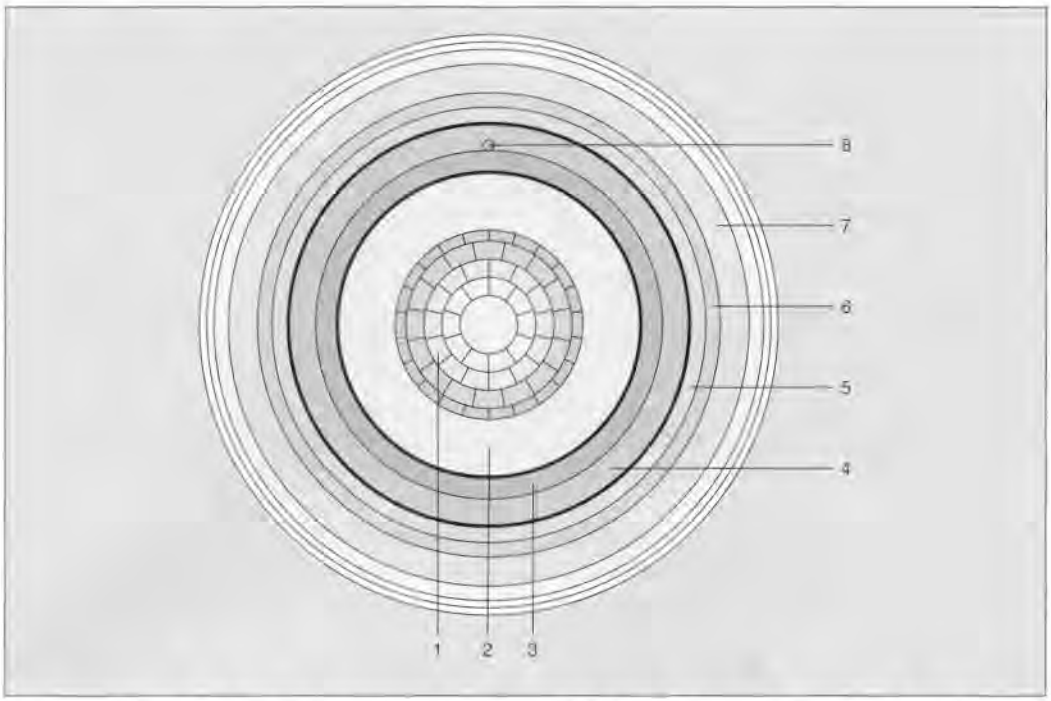

11 Cross-section of the mass impregnated 250 kV DC cable with integrated return conductor. Main points are: 1 Conductor 1000 mm²; 2 Insulation 11·5 mm; 3 Lead sheath; 4 Plastic sheath; 9 and 10 Return conductor 1150 mm²; 7 Return conductor insulation 5·5 mm; 8 FO cable six fibres

the pressurising pipe to the termination must be interrupted by a non-conductive stretch capable of withstanding stationary and transient voltages.

Testing

(i) Type tests

The mechanical tests were performed according to the CIGRE Recommendations, as given in *Electra* No. 171, January 1997. The design depth was 165 m. The electrical tests were performed according to CIGRE Recommendations in *Electra* No. 72, October 1980. The nominal voltage was 250 kV. The impulse voltage tests were conducted at $2{\cdot}7*U_0$, superimposed on 250 kV DC with opposite polarity. Two lengths with flexible repair joints were type tested. The return conductor insulation was tested according to IEC 60229. The DC withstand test was 25 kV for four hours, the impulse voltage level was 37·5 kV. The FO parts were tested before and after each major test sequence with OTDR (optical time-domain reflectometry).

(ii) Performance tests

- Bending fatigue test with 50 000 cycles, moving the cable ±0·3 m out of the centre line while at the maximum test tension, was performed
- Drainage test at maximum conductor temperature for eight days was also performed.

(iii) Routine tests

Each production length was tested with $2*U_0$ DC high voltage, the conductor and return conductor resistance were measured. On a 20 m length from each production length the loss angle and the capacitance were measured.

(iv) Factory acceptance testing

The complete delivery length was tested with $2*U_0$ on the main insulation for 15 minutes, 25 kV DC on the RC insulation for 15 minutes and OTDR FO fibres.

(v) After laying tests

The takeover test comprised the following: conductor continuity test, high-voltage test on main insulation with 338 kV for 15 minutes, DC test on IRC-insulation with 10 kV for one minute, OTDR and insertion loss measurements on the fibres and checking the end termination pressurisation alarm functions.

Transport and laying

On both sides of the crossing there are long land cable sections. The route lengths are 3 km on the Northern Ireland side and 5 km on the Scottish side. There is an elevation difference along the routes, especially on the Scottish side where it is 160 m. To facilitate a short construction time and keep the trenches in the meadows open for only a short period, cable lengths were transported by sea and pulled onshore in approximately 1·5 km lengths. In this way the number of joints per length was kept to one on the Irish side and two on the Scottish side. The cables were transported and

pulled ashore during autumn 2000. In order to minimise land damage trenching of the cables was started in the spring of 2001. The jointing on land started in 2000 and was finished in summer 2001.

The submarine cables were transported in complete 55 km lengths and laid by *C/S Skagerrak*. It is one of the two ships capable handling and laying such heavy cables in the assigned cable corridors. The cable laying was completed in May 2001. Following laying the cables were embedded with the Capjet. The Capjet utilises water jets for loosening the soil and keeping it fluidised while the cable sinks to the bottom of the trench. Propulsion is provided by a combination of water jets and thrusters. The jetting technique makes the Capjet light and responsive as compared to surface towed burial machines as ploughs. It is also a minimally invasive technique. This operation was finished in autumn 2001.

Control of the link

The control and protection systems in each converter station of the Moyle interconnector are following the modern concept of a completely modular and redundant design, which provides the following benefits:

- modular design which provides optimum redundant solutions
- design structured for easy expansion in the future
- application of well proven standard hardware and software systems
- high integration of all control and protection systems
- satellite synchronised station master clock system (time base for fault and event recording)
- modern redundant fibre-optical fieldbus systems and local area networks
- standardised telecommunication systems and protocols for inter-station communication as well as for communication to control centres for remote control
- I/O units with redundant field bus interface.

Fig. 12 shows the various levels of the HVDC control hierarchy for the two converter stations of the Moyle interconnector. Basically there are three main levels in each converter station:

- operator control level
- control level
- process level including interfacing.

The *operator control level* in each converter station consists mainly of the fully redundant station initiation and monitoring system. The interfaces to the remote control facility at the higher network control level (e.g. the dispatch centre) and the telecommunication interface to the corresponding converter station for exchange of monitoring data are also part of that level. To have a common time base for all station equipment a central master clock system (GPS synchronised) is provided.

The *control level* comprises the station control system and the pole control system including the thyristor gate control system (valve base electronic). The telecontrol system, which exchanges fast control and protection data between the stations, is directly connected to the related pole control. The event recording is integrated within the controls. The transient fault recorder as an independent recording equipment is not explicitly shown in Fig. 12. All the control systems at the control level are fully redundant.

The *process level* mainly consists of the HVDC converters (transformers and valves), the AC filters/shunt capacitors, the complete AC and DC switchyard and the auxiliary systems (auxiliary power supply, valve cooling, fire protection etc.). The respective I/O interfaces are also part of the process level.

Information exchange between the operator control level and the control level is provided by a redundant local area network (LAN). The required information exchange between the control level and the process level is achieved via a redundant fieldbus system.

The measured DC values (current and voltage) are redundantly transmitted via fibre-optic links from the measuring point to the related control and protection cubicle. This fast digital (numerical) light signal is insensitive to electromagnetic noise and therefore an excellent solution for data transmission in the high-voltage yard.

The *protection systems* are totally independent of the control systems and located in separate cubicles to avoid any interference (not shown in Fig. 12).

Operation of the Moyle interconnector

Operation of the Moyle interconnector will be performed according to a clearly structured control location hierarchy with different control function groups under consideration of the two control levels (for HVDC control) system control level and station control level.

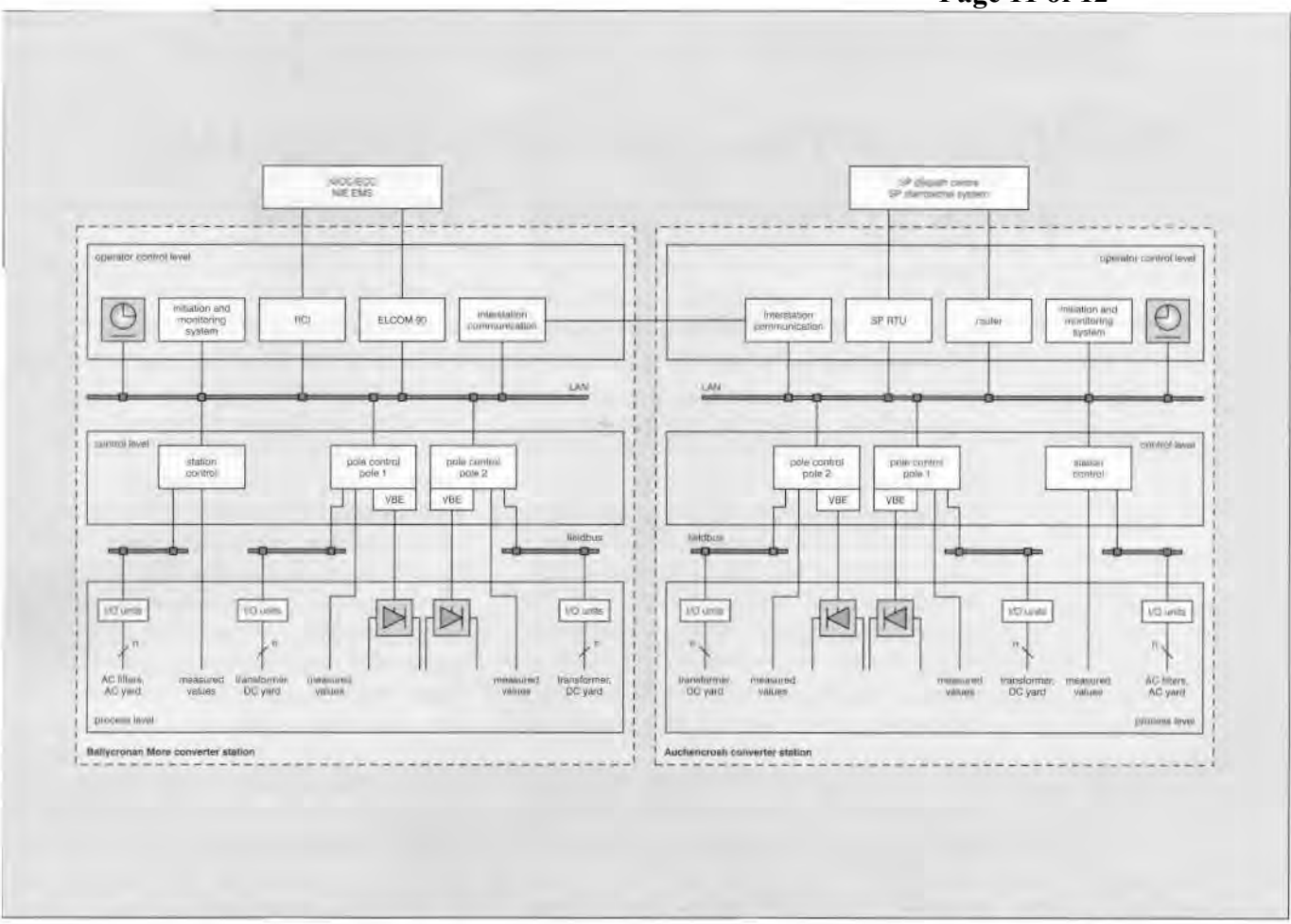

12 HVDC control hierarchy Moyle inter connector (redundancy is not shown)

The control location hierarchy is based on the following control locations:

- field control (operation close to the process with highest priority with prevention of control from any distant control)
- local control from operator initiation and monitoring systems in the converter stations
- remote control from central control centres in Northern Ireland (from Northern Ireland Electricity's (NIE) control centre (NICC) near Belfast or NIE's emergency control centre (ECC)), respectively, Scotland (Scottish Power's (SP) dispatch centre near Glasgow).

The control functions of the Moyle Interconnector are divided into the following three control function groups:

- AC control BallycronanMore:

Control of the line bays and bus coupler bay at BallycronanMore with control locations Northern Ireland (local initiation and monitoring system BallycronanMore, NIE control centre (NICC), or NIE's emergency control centre (ECC)).

- Control Auchencrosh:

Control of the line bay at Auchencrosh with control locations in Scotland (local initiation and monitoring system Auchencrosh, SP dispatch centre via SP standalone system, or SP dispatch centre via SP RTU). Normally controlled by SP RTU.

- HVDC control (BallycronanMore and Auchencrosh):

The HVDC control function group covers the remaining part of the converter stations, i.e. filter bays, converter bays, HVDC control functions and auxiliary power. If inter-station communication between the two converter stations is available, then the HVDC system is operated in the system control level, otherwise in station control level. The system control levels permit operation of HVDC related functions from only one of the converter stations. The controlling station is referred to as 'master station', the other as 'slave station'.

Since the converter stations will be unmanned, the control systems are designed for fully remote operation of both converter stations. The remote control will primarily be from Northern Ireland Electricity's control centre (NICC), but full remote control is also possible from NIE's emergency control centre (ECC) or ScottishPower's dispatch centre. The HVDC link can also be controlled from the operator control rooms at the converter stations, but this will only take place during commissioning and maintenance due to NIE's operational philosophy.

In Northern Ireland the remote control of the converter stations is fully integrated into the existing energy management system (EMS) at NICC and ECC. All data related to the AC control is transmitted from the remote control interface (RCI) in BallycronanMore to the front ends of NIE's EMS in NICC and ECC using the IEC870-5 101 protocol. All data related to the HVDC control is interfaced via a gateway computer in BallycronanMore to the front ends in NICC and ECC. Data exchange is provided via ELCOM90 protocol.

The communication between the BallycronanMore converter station in Northern Ireland and the NIE's dispatch centre for RCI and ELCOM90 gateway are provided via two redundant 2 Mbit/s circuits, which are routed via diverse routes to improve the reliability. The two circuits are at the dispatch centre connected to the redundant front ends, which are then connected to a LAN of NIE's EMS system. The communication between BallycronanMore and the emergency control ECC centre is via one 2 Mbit/s circuit.

In Scotland the remote control from SP's dispatch centre is carried out from a standalone system (one operator station). The standalone system is interfaced with a WAN connection via routers and telecommunication equipment to the LAN of Auchencrosh converter station. The communication between Auchencrosh and SP's dispatch centre is provided via a 2 Mbit/s circuit and is also routed via diverse routes.

The inter-station communication between the two converter stations is via two redundant 8 Mbit/s circuits over the optic fibres in the IRC cable.

The control system is fully redundant in order to meet the very high demands on availability and reliability of the installation. The control system combines the functions for control, supervision and protection of the link. The normal operating mode of the link is absolute power control. In addition other control functions which are typical for modern HVDC transmissions are available, including delta power control, emergency power control, direct current control, frequency limit control, stability control functions and automatic reactive power control.

The main design objective of the Moyle interconnector is to establish an electricity interconnection with low losses and a very high availability and reliability combined with a low maintenance requirement throughout the expected life time of more than 30 years. This is reflected in a state-of-the-art design using a high degree of redundancy and a combination of the latest HVDC technology and components with a long time record of operation experience. The high performance of the converter stations is reflected in the guaranteed losses of less than 1·35% and a guaranteed value for the energy availability of more than 99·6%. The converters are designed for a biannual scheduled maintenance. A safe and reliable operation will be achieved by experienced and skilled operating and maintenance personnel well trained in Siemens' training program.

References

1 UNIPEDE Group of Experts on Island Systems: 'Island systems', UNIPEDE, Kobenhavn, 1991
2 RAINEY, A., *et al.*: 'Interaction between an HVDC interconnection and an island system—impact on the design of the Moyle interconnection', CIGRÉ 1994
3 AMMON, J., HUANG, H., KUMAR, A., LIPS, P., PEREIRA, M., SADEK, K., and WILD, G.: 'New developments in HVDC technology', CEPSI, 2000
4 NIEDERNOSTHEIDE, F.-J., SCHULZE, H.-J., DORN, J., KELLNER-WERDEHAUSEN, U., and WESTERHOLT, D.: 'Light-triggered thyristors with integrated protection functions', International Symposium on Power Semiconductors and ICs, Toulouse, 2000
5 HARVEY, C., STENSETH, K., and WOHLMUTH, M.: 'The Moyle HVDC interconnector: project considerations, design and implementation', International Conference on AC-DC Power Transmission, IEE London, 2001
6 ATKINSON, I., SMITH, M., DAMGAARD, P., HAEUSLER, M., KUHN, M., LIPS, P., and BALOG, G.: 'Innovative technology in the Moyle interconnector', International Conference on AC-DC Power Transmission, IEE London, 2001

© IEE : 2002

I. Atkinson, C. Harvey and M. Smith are with Moyle Interconnector plc, UK; P. Damgaard is with Danish Power Consult, Denmark; M. Haeusler, M. Kuhn, P. Lips and M. Wohlmuth are with Siemens AG, Germany; and G. Balog and K. Stenseth are with Nexans Norge AS, Norway.