Completion of this form is necessary to accomplish the statutory purpose as outlined in the Illinois Public Utilities Act, chapter 111 2/3, Sec. 9. Failure to provide the requested information may prevent your request from being processed. This form has been approved by the Forms Management Center.

Form 3

STATE OF ILLINOIS
ILLINOIS COMMERCE COMMISSION

Petition for permission to make a major change in crossing protection, or to install new protection under 92 Illinois Administrative Code 1535.400 (d).

Date: **July 28, 2015**

To the Illinois Commerce Commission:

The petitioner **Norfolk Southern Railway Company** shows

(1) That it is a railroad company operating a line of railroad in the State of Illinois.

(2) That petitioner proposes and hereby makes application for authority to make a major change in crossing protection, or to install new protection, under 92 Illinois Administrative Code 1535.400 (d) adopted by this Commission.

(3) That the location of the crossing, the nature of protection now established and proposed to be established, and other pertinent facts in connection therewith, are set forth in the statement attached to and forming part of this petition.

(4) That petitioner's reasons and purpose, with reference to its said proposal are

Installation of Grade Crossing Warning Devices requested by Illinois Commerce Commission

at: CR-170E in Bellmont, Illinois, DOT: 724825H, MP: 139.91 W. Case T15-0058

File No.: CX1111227 Project No.: 04.1044

(5) That the facts set forth in this petition and in the statement and plans or plats attached thereto, are, all of them, true and correct to the best of petitioner's knowledge and belief.

WHEREFORE, the petitioner prays that the Commission will, if deemed desirable by the Commission, set the aforesaid matter for hearing, and that the Commission enter an order or adopt a resolution consenting to and granting authority for the making of the said proposed changes in or additions to crossing protection.

Norfolk Southern Railway Company

By

S.J. Klinger, Administrator
Grade Crossing Program
(404) 529-1234

Thomas W. Ambler
(Attorney for Petitioner)

Norfolk Southern Corporation
Three Commercial Place
Norfolk, VA 23510-2191
(Attorney's Address)

Statement, attached to and part of an application for permission to make a major change in crossing protection or to install new protection, under 92 Illinois Administrative Code 1535.400(d).

1. Name of Railroad Company **Norfolk Southern Railway Company**

2. Crossing Number **724825H**

3. Village or City **Bellmont**

4. Name of Street or Highway **CR-170E**

5. Public Agency Maintaining Highway **County**

6. Protection now established: (Give full description. Indicate the hours of any manual protection.)

   Passive Crossing

7. Protection desired: (Give details)

   Install grade crossing warning devices to include LED flashing lights with gates and bell controlled by constant warning time detection equipment.

8. Number of main tracks **One** Other tracks **None**

9. Number of passenger movements:

   6 a.m. to 6 p.m. **None** 6 p.m. to 6 a.m. **None**

10. Number of freight train movements:

    6 a.m. to 6 p.m. **Five** 6 p.m. to 6 a.m. **Four**

11. Approximate number of switch movements:

    6 a.m. to 6 p.m. **Two** 6 p.m. to 6 a.m. **One**

12. Maximum speed of trains at crossing on each track in each direction:

    Track 1 N/E Bound **50 mph** S/W Bound **50 mph**

    Track 2 N/E Bound **N/A mph** S/W Bound **N/S mph**

    Track 3 N/E Bound **N/A mph** S/W Bound **N/A mph**

13. Passenger platforms served by tracks within the limits of track circuits, if any **None**

14. Where automatic signals or gates are proposed, approximate number of train or engine movements daily which would cause false indications or operation:

None

15. Nature and approximate amount of street or highway traffic over crossing:

100 AADT

16. In addition to the information listed hereinbefore in Form 3, attach a track plan or plat of the proposed crossing. This plan should show:

(a) Width and surface of highway.

(b) Highway intersections (including private driveways to be so indicated) and location of established highway signs or signals within 100 feet of crossing.

(c) Location of tracks, switches and other railroad facilities such as block signals, etc. within limits of track circuits, present and/or proposed.

(d) Where automatic protection is proposed, show proposed location of signals (sidelights, cantilevers, etc., if any).

(e) Show the length of each operation track section within the control limits of the crossing protection and its function.

ADDITIONAL INFORMATION

Drawings attached for question no. 16

VERIFICATION

I, **S. J. Klinger**, first being duly sworn upon oath depose and say that I am **Administrator, Grade Crossing Program**, of **Norfolk Southern Railway Company**, a **Virginia** corporation; that I have read the above and foregoing petition by me subscribed and know the contents thereof; that said contents are true in substance and in fact, except as to those matters stated upon information and belief, and as to those, I believe same to be true.

Administrator, Grade Crossing Program

SH. NO.	CONTENTS
NX1	INDEX SHEET
1	LAYOUT
2	PROFILE
3	CABLE PLAN
4	LOAD CENTER
5	B12 & B16 CHARGERS & BATTERIES
6	4000 GCP 6-TK CHASSIS & I/O LAYOUT
7	4000 GCP 6-TK CHASSIS & MODULE LAYOUT
8	4000 GCP PROGRAMMING SETUP
9	4000 GCP PROGRAMMING SETUP
10	CONNECTORS FOR TRACK MODULES
11	CONNECTORS FOR TRACK MODULES
12	CONNECTORS FOR TRACK MODULES
13	CONNECTORS FOR TRACK MODULES
14	CONNECTORS FOR TRACK MODULES
15	CPU MODULE, SEAR III & VHF HOOK-UPS
16	SEAR III PROGRAMMING SETUP
17	SSCC#1 MODULE HOOK-UP
18	SSCC#2 MODULE HOOK-UP
19	SIGNAL "A" S60 GATE & FLASHER CIRCUITS
20	SIGNAL "B" S60 GATE & FLASHER CIRCUITS
21	BACKBOARD 1A & 1B
22	REAR BACKBOARD 1A & 1B
23	FARADAY SHIELD 1A & 1B
24	FARADAY SHIELD 1C
25	HOUSE SIDE C LAYOUT & RACK PLACEMENT
26	HOUSE SIDE A LAYOUT
27	HOUSE SIDE B LAYOUT & TOP VIEW

INDEX SHEET

DESIGNED BY: TAH 07-01-15	NORFOLK SOUTHERN	
DRAWN BY: RSD 07-01-15	OFFICE OF ASS'T. VICE PRESIDENT COMM. & SIGNAL, ATLANTA, GA.	M.P.: 139.91-W
CHECKED BY: JAR 07-01-15	BELLMONT, IL FLGS AT CR 170 E	
IN SERVICE: - -	SOUTHERN WEST	FILE No. R-
	CADD or DWG. No. SE9947P.NX1	SHEET No. 1 of 1

REVISION INITIALS

PROPERTY NORFOLK SOUTHERN RAILWAY CO.

TO E. ST. LOUIS
M.P. (DECREASING)

NOTES:

1. MAX. TRAIN SPEED 50 M.P.H.
2. LATITUDE N 38° 22' 50" LONGITUDE W 87° 57' 14"
   ELEVATION 426'
3. SIGNAL "A" TO HAVE BELL.
4. LOCATE U/G UTILITIES & CABLE BEFORE DIGGING.
5. CROSSING LOCATED IN WABASH COUNTY.
6. NEAREST STREET ADDRESS IS
   10850 CR 170E 1000' (SOUTH)
7. NEAREST INTERSECTING STREET IS
   IL 15 (NORTH)
8. DISTANCE TO NEAREST INTERSECTING
   STREET IS 2250 FT.
9. 10 CU. YRDS. OF FILL REQUIRED IN QUAD. "A" - FOR NEW SIGNAL
   20 CU. YRDS. OF FILL REQUIRED IN QUAD. "B" - FOR NEW SIGNAL.
   25 CU. YRDS. OF FILL REQUIRED IN QUAD. "A" - FOR NEW CROSSING HOUSE
10. INSTALLING 90 DEGREE ELBOW AND 10' EXTENSION OF 24" CULVERT IN QUAD "B". WORK TO BE ADDRESSED BY APPROPRIATE PARTIES.
11. INSTALL 30' 24" CMP IN QUAD "A" - FOR NEW CROSSING HOUSE. WORK TO BE ADDRESSED BY APPROPRIATE PARTIES.
12. FIELD FORCES TO INSTALL BERM WALLS IN BOTH QUADRANTS "A" AND "B".
13. RAISE/RELOCATE O.H. LINES IN QUADRANT "A"
    CONTACT:
    POWER-AMEREN IL (800) 755-5000
14. UTILITIES IN THE AREAS - CONTACT:
    PHONE-WABASH TELEPHONE CO-OP (618) 665-3311
15. REUSE EXISTING AC SERVICE.
16. FIELD FORCES TO INSTALL WBS'S AROUND INSULATED JOINTS LOCATED 508' AND 530' EAST OF CROSSING ON SIDING.
17. FIELD FORCES TO BOND OUTER APPROACH ON SIDING.
18. FIELD FORCES TO CONVERT SERIES FOULING TO PARALLEL FOULING AT WEST SIMPSON CP (SEE RED/YELLOW DWG* 7C14000W).
19. FIELD FORCES TO CONTACT DUSTIN K. BUNTING (WABASH COUNTY ENGINEER) BEFORE START OF CONSTRUCTION TO HANDLE CULVERT/ROADWAY WORK.
    PHONE* (618) 262-4466 - EMAIL COUNTYENG@FRONTIER.COM

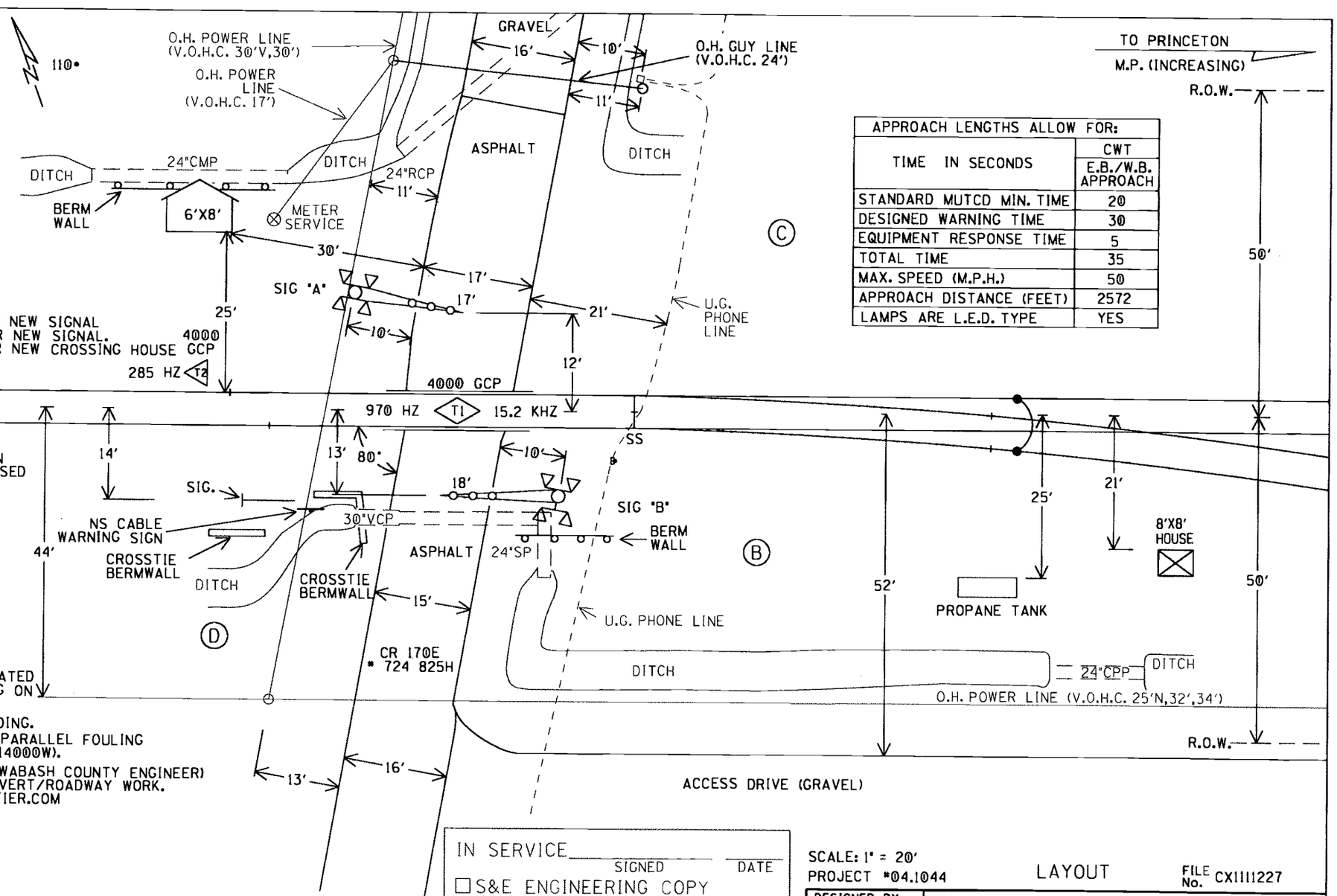

TO PRINCETON
M.P. (INCREASING)

APPROACH LENGTHS ALLOW FOR:	
TIME IN SECONDS	CWT E.B./W.B. APPROACH
STANDARD MUTCD MIN. TIME	20
DESIGNED WARNING TIME	30
EQUIPMENT RESPONSE TIME	5
TOTAL TIME	35
MAX. SPEED (M.P.H.)	50
APPROACH DISTANCE (FEET)	2572
LAMPS ARE L.E.D. TYPE	YES

MAINLINE 132*RE CWR

(A) (B) (C) (D) = QUADRANT MARKERS

IN SERVICE _____ SIGNED _____ DATE
☐ S&E ENGINEERING COPY
☐ CONSTRUCTION OFFICE COPY
RETURN TO S&E ENG. AFTER COMPLETION
☐ FIELD COPY
RETURN TO CASE AFTER COMPLETION
☐ PROJECT ENGINEER COPY

SCALE: 1" = 20'
PROJECT *04.1044
LAYOUT
FILE No. CX1111227

DESIGNED BY:	
TAH	07-01-15
DRAWN BY:	
RSD	07-01-15
CHECKED BY:	
JAR	07-01-15
IN SERVICE:	
	- -

NORFOLK SOUTHERN
OFFICE OF ASS'T. VICE PRESIDENT COMM. & SIGNAL, ATLANTA, GA.
M.P.: 139.91-W
BELLMONT, IL
FLGS AT CR 170 E
SOUTHERN WEST
FILE No. R-
CADD or DWG. No. SE9947P.01
SHEET No. 1 of 27

REVISION INITIALS

PROPERTY
NORFOLK SOUTHERN RAILWAY CO.

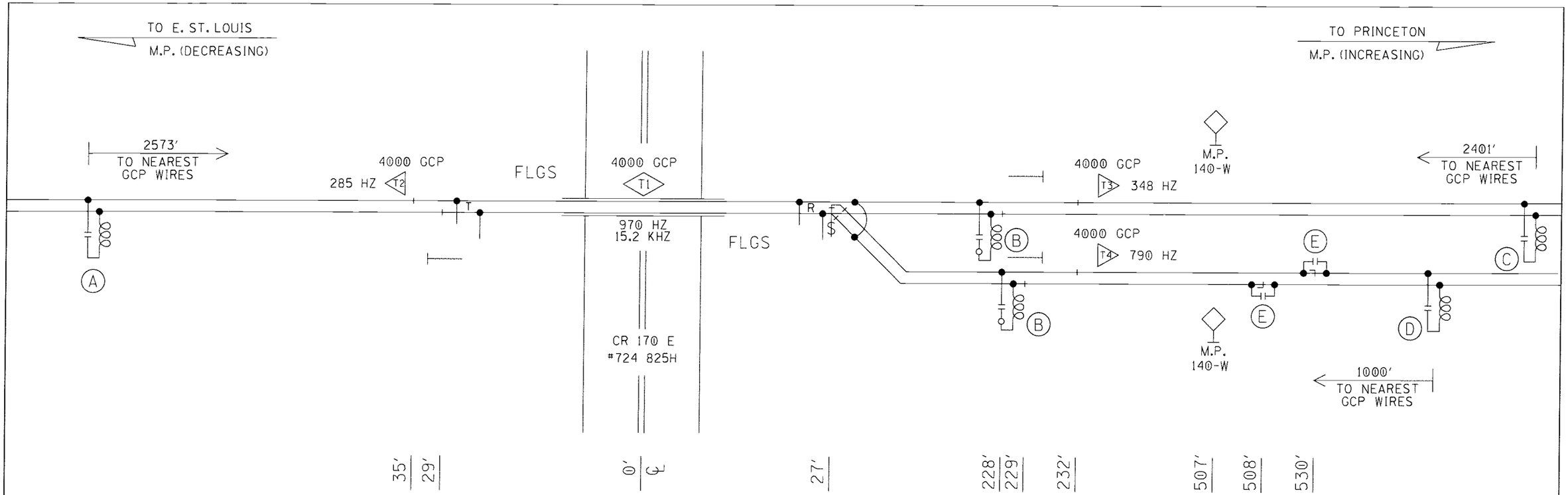

(A)- MF-NBS 62775-1543 (285HZ)

(B)- MF-NBS 62775-3497 (970HZ)
8V617 - 1000' D.L.

(C)- MF-NBS 62775-1543 (348HZ)

(D)- MF-NBS 62775-3497 (790HZ)

(E)- WBS

PROFILE

DESIGNED BY: TAH 07-01-15	NORFOLK SOUTHERN		
DRAWN BY: RSD 07-01-15	OFFICE OF ASS'T. VICE PRESIDENT COMM. & SIGNAL, ATLANTA, GA.	M.P.:	139.91-W
CHECKED BY: JAR 07-01-15	BELLMONT, IL FLGS AT CR 170 E		
IN SERVICE: - -	SOUTHERN WEST	FILE No. R-	
	CADD or DWG. No. SE9947P.02	SHEET No. 2	of 27

REVISION INITIALS										

PROPERTY
NORFOLK SOUTHERN RAILWAY CO.

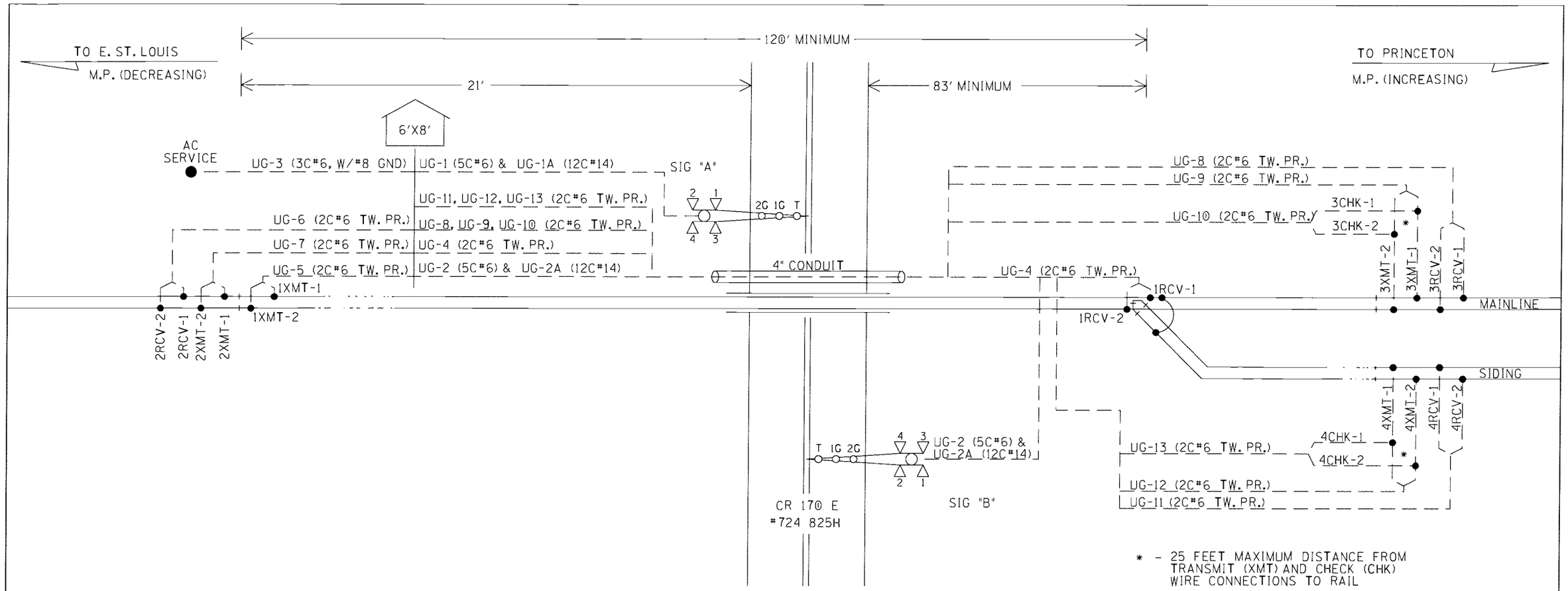

UG-1-5CUG #6
AEC
AEZ
AEB
B16-A
N16-A

UG-2-5CUG #6
BEC
BEZ
BEB
B16-B
N16-B

UG-1A-12CUG #14
NAXG
AXG
1AXX
AXX
XGP1
AGD
AGBX120
AGNX120
SPARE
SPARE
SPARE
SPARE

UG-2A-12CUG #14
NBXG
BXG
1BXX
BXX
XGP1
XGP
BGD
BGBX120
BGNX120
SPARE
SPARE
SPARE

UG-3-3CUG #6 W/#8 GND
BX120-A
BX120-B
NX120
GND

UG-4-TW. PR. #6
1RCV-1
1RCV-2

UG-5-TW. PR. #6
1XMT-1
1XMT-2

UG-6-TW. PR. #6
2RCV-1
2RCV-2

UG-7-TW. PR. #6
2XMT-1
2XMT-2

UG-8-TW. PR. #6
3RCV-1
3RCV-2

UG-9-TW. PR. #6
3XMT-1
3XMT-2

UG-10-TW. PR. #6
3CHK-1
3CHK-2

UG-11-TW. PR. #6
4RCV-1
4RCV-2

UG-12-TW. PR. #6
4XMT-1
4XMT-2

UG-13-TW. PR. #6
4CHK-1
4CHK-2

CABLE PLAN

DESIGNED BY: TAH 07-01-15	NORFOLK SOUTHERN		
DRAWN BY: RSD 07-01-15	OFFICE OF ASS'T. VICE PRESIDENT COMM. & SIGNAL, ATLANTA, GA.	M.P.:	139.91-W
CHECKED BY: JAR 07-01-15	BELLMONT, IL FLGS AT CR 170 E		
IN SERVICE: - -	SOUTHERN WEST	FILE No.	R-
	CADD or DWG. No. SE9947P.03	SHEET No.	3 of 27

REVISION INITIALS

PROPERTY
NORFOLK SOUTHERN RAILWAY CO.

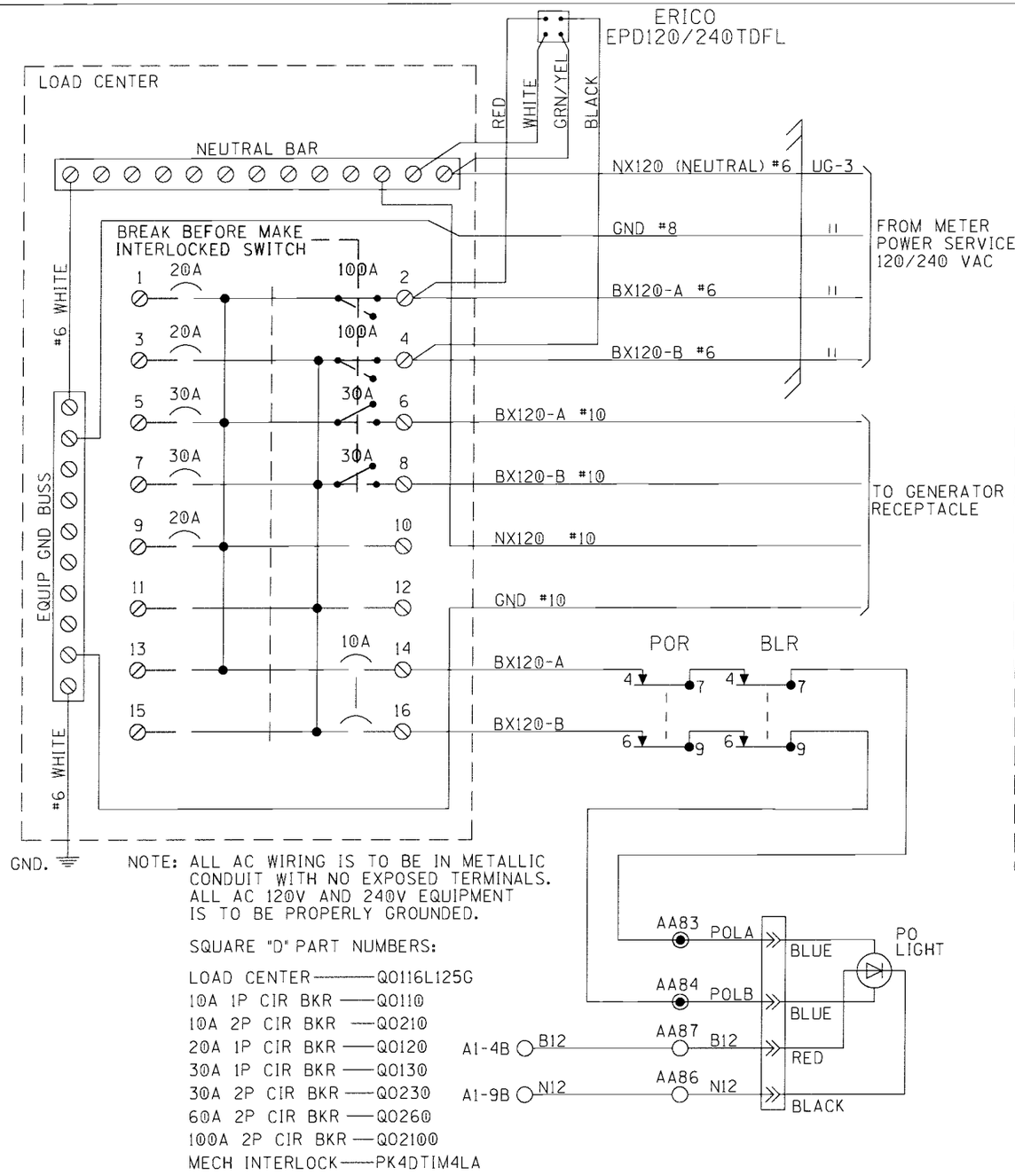

NOTE: ALL AC WIRING IS TO BE IN METALLIC CONDUIT WITH NO EXPOSED TERMINALS. ALL AC 120V AND 240V EQUIPMENT IS TO BE PROPERLY GROUNDED.

SQUARE "D" PART NUMBERS:

LOAD CENTER ——— Q0116L125G
10A 1P CIR BKR —— Q0110
10A 2P CIR BKR —— Q0210
20A 1P CIR BKR —— Q0120
30A 1P CIR BKR —— Q0130
30A 2P CIR BKR —— Q0230
60A 2P CIR BKR —— Q0260
100A 2P CIR BKR —— Q02100
MECH INTERLOCK —— PK4DTIM4LA

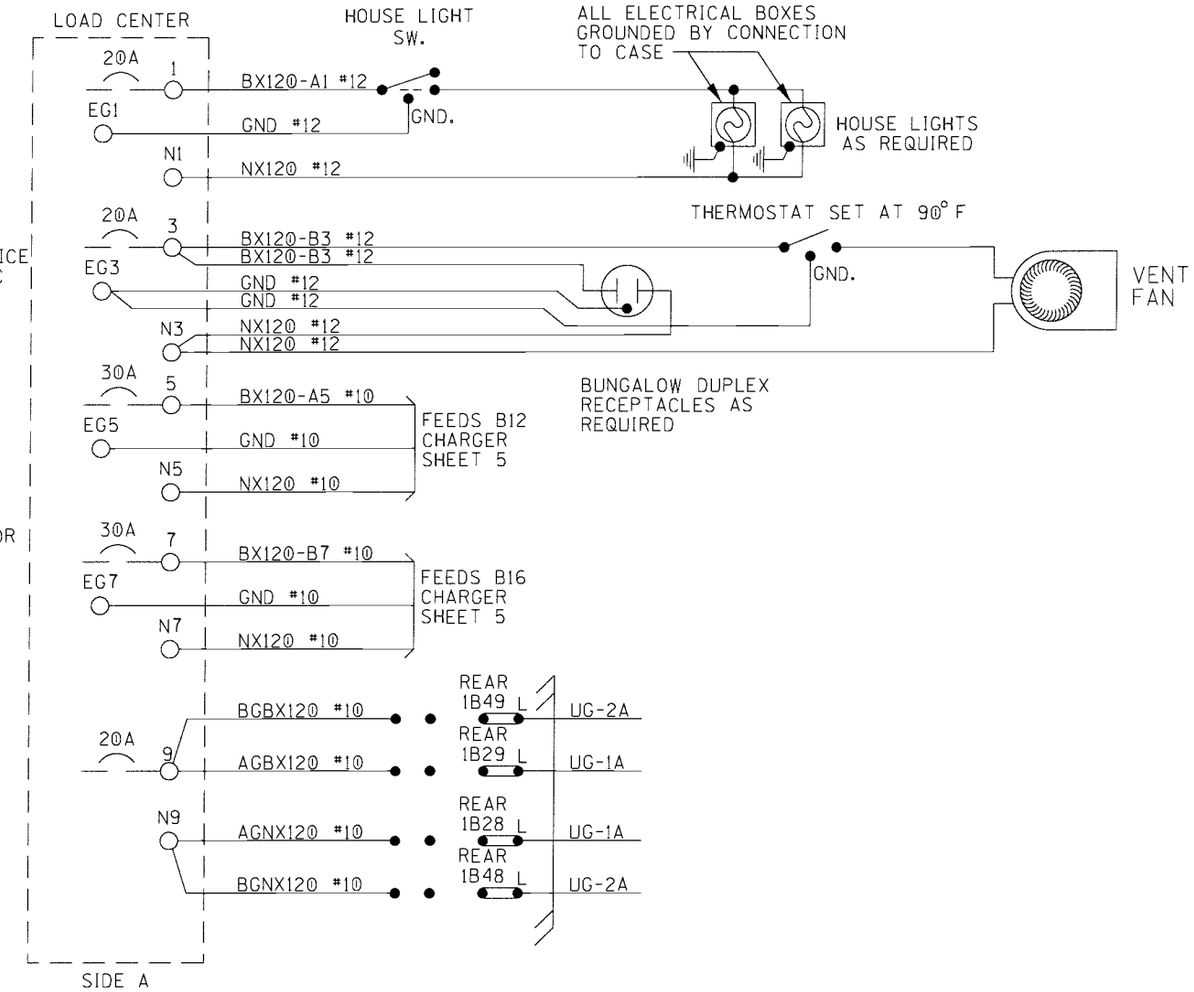

NOTE:
ALL WIRING TO BE #16AWG
UNLESS NOTED OTHERWISE.

GENERATOR RECEPTACLE:
MALE CONNECTOR - NEMA L1430-FI

LOAD CENTER

DESIGNED BY: TAH 07-01-15	NORFOLK SOUTHERN		
DRAWN BY: RSD 07-01-15	OFFICE OF ASS'T. VICE PRESIDENT COMM. & SIGNAL, ATLANTA, GA.	M.P.:	139.91-W
CHECKED BY: JAR 07-01-15	BELLMONT, IL FLGS AT CR 170 E		
IN SERVICE: - -	SOUTHERN WEST	FILE No. R-	
	CADD or DWG. No. SE9947P.04	SHEET No. 4	of 27

REVISION INITIALS											

PROPERTY
NORFOLK SOUTHERN RAILWAY CO.

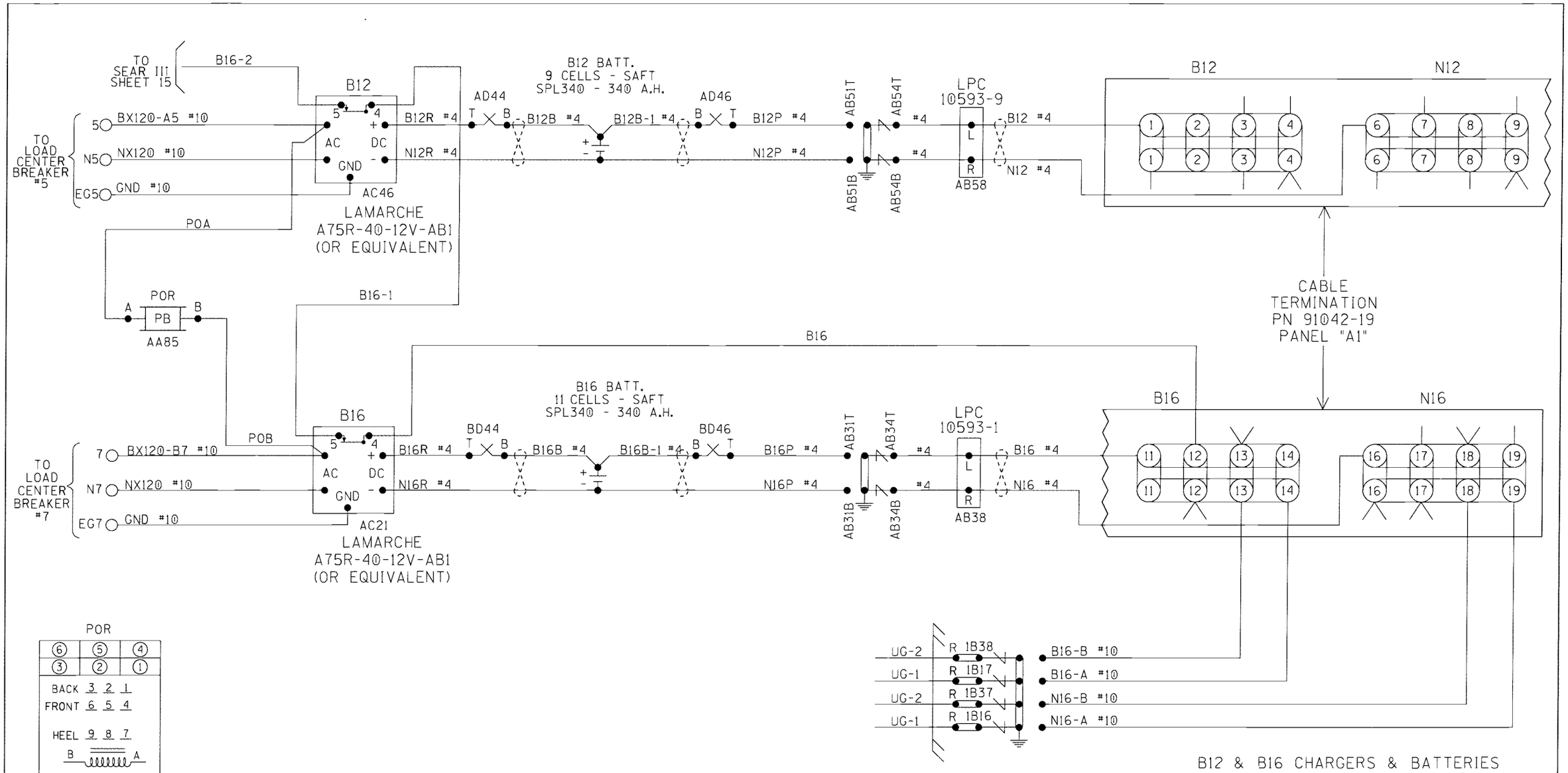

B12 & B16 CHARGERS & BATTERIES

NOTE:
ALL WIRING TO BE #16AWG UNLESS NOTED OTHERWISE.

DESIGNED BY: TAH 07-01-15	NORFOLK SOUTHERN		
DRAWN BY: RSD 07-01-15	OFFICE OF ASS'T. VICE PRESIDENT COMM. & SIGNAL, ATLANTA, GA.	M.P.:	139.91-W
CHECKED BY: JAR 07-01-15	BELLMONT, IL FLGS AT CR 170 E		
IN SERVICE: - -	SOUTHERN WEST	FILE No.	R-
	CADD or DWG. No. SE9947P.05	SHEET No.	5 of 27

REVISION INITIALS

PROPERTY
NORFOLK SOUTHERN RAILWAY CO.

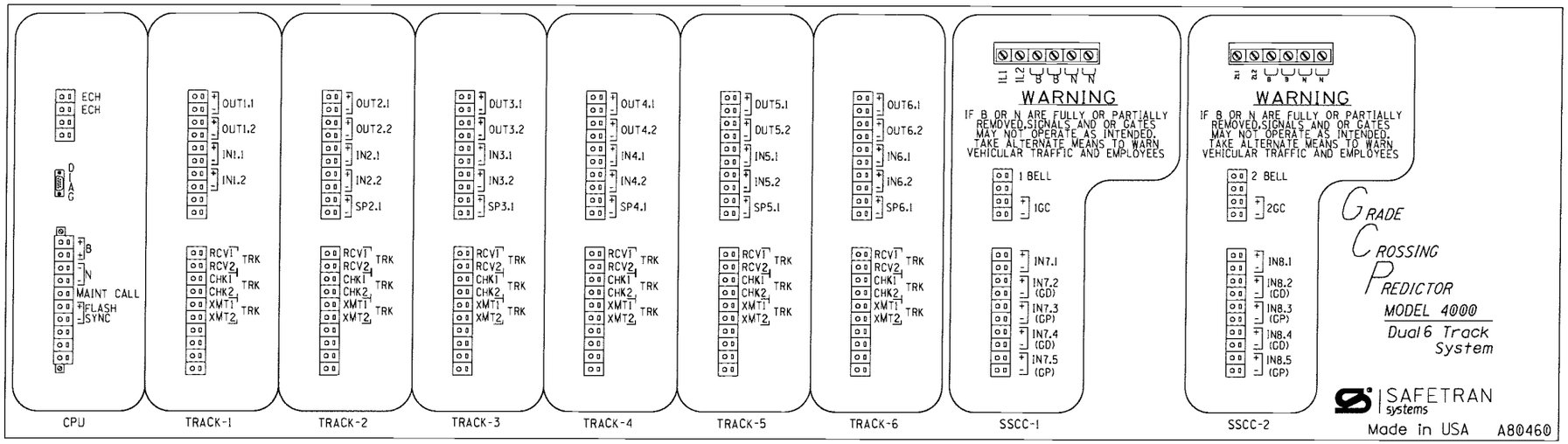

WARNING

REMOVAL OF THE SSCCIIII MODULE WILL CAUSE THE GATE(S) TO DROP BUT THE LIGHTS WILL NOT ACTIVATE

CAUTION

ASSURE CORRECT POLARITY OF THE SSCCIIII MODULE OR SEVERE DAMAGE WILL OCCUR.

ATTENTION!

ENSURE THE DISPLAY MODULE HEATER IS DISABLED. LEAVING THE DISPLAY HEATER ENABLED WILL REDUCE THE AMOUNT OF BATTERY STANDBY TIME IN THE EVENT OF AN AC POWER FAILURE.

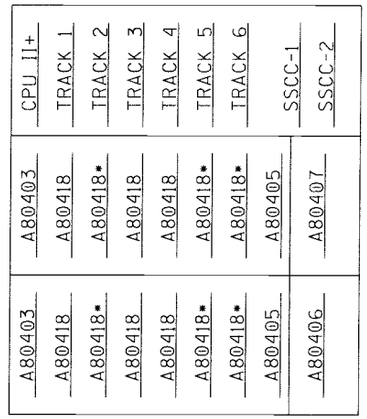

MODUAL BAYS SHOWN ON NEXT SHEET

HEATER FUNCTION IS JUMPER SELECTABLE ON THE DISPLAY MODULE BOARD.
THREE OPTIONS ARE AVAILABLE:
NORMAL LCD HTR (DEFAULT)
HI CURRENT
NO JUMPER (HEATER DISABLED)

*= MAIN AND STANDBY MAY USE RIO IN TRACKS 2, 5, AND 6 SLOTS (M3, M6, AND M7)

4000 GCP 6-TK CHASSIS AND I/O LAYOUT

DESIGNED BY: TAH 07-01-15	NORFOLK SOUTHERN		
DRAWN BY: RSD 07-01-15	OFFICE OF ASS'T. VICE PRESIDENT COMM. & SIGNAL, ATLANTA, GA.	M.P.:	139.91-W
CHECKED BY: JAR 07-01-15	BELLMONT, IL FLGS AT CR 170 E		
IN SERVICE: - -	SOUTHERN WEST	FILE No.	R-
	CADD or DWG. No. SE9947P.06	SHEET No.	6 of 27

REVISION INITIALS											

PROPERTY
NORFOLK SOUTHERN RAILWAY CO.

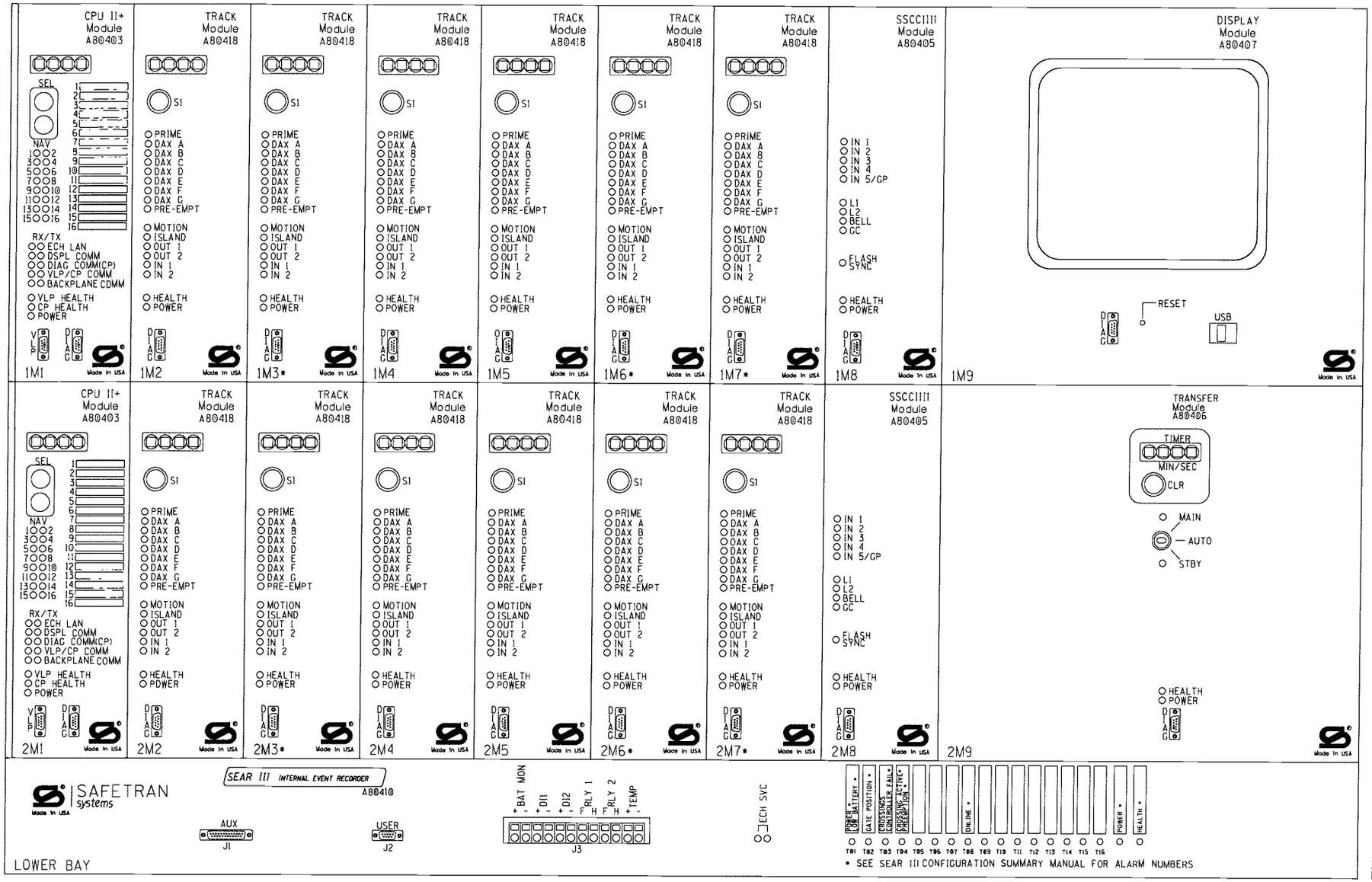

WARNING

REMOVAL OF THE SSCCIIII MODULE WILL CAUSE THE GATE(S) TO DROP BUT THE LIGHTS WILL NOT ACTIVATE

CAUTION

ASSURE CORRECT POLARITY OF THE SSCCIIII MODULE OR SEVERE DAMAGE WILL OCCUR.

ATTENTION!

ENSURE THE DISPLAY MODULE HEATER IS DISABLED. LEAVING THE DISPLAY HEATER ENABLED WILL REDUCE THE AMOUNT OF BATTERY STANDBY TIME IN THE EVENT OF AN AC POWER FAILURE.

HEATER FUNCTION IS JUMPER SELECTABLE ON THE DISPLAY MODULE BOARD.
THREE OPTIONS ARE AVAILABLE:
NORMAL LCD HTR (DEFAULT)
HI CURRENT
NO JUMPER (HEATER DISABLED)

*= MAIN AND STANDBY MAY USE RIO IN TRACKS 2, 5, AND 6 SLOTS (M3, M6, AND M7)

4000 GCP 6-TK CHASSIS AND MODULE LAYOUT

DESIGNED BY: TAH 07-01-15	NORFOLK SOUTHERN		
DRAWN BY: RSD 07-01-15	OFFICE OF ASS'T. VICE PRESIDENT COMM. & SIGNAL, ATLANTA, GA.	M.P.: 139.91-W	
CHECKED BY: JAR 07-01-15	BELLMONT, IL FLGS AT CR 170 E		
IN SERVICE: - -	SOUTHERN WEST	FILE No. R-	
	CADD or DWG. No. SE9947P.07	SHEET No. 7 of 27	

REVISION INITIALS

PROPERTY
NORFOLK SOUTHERN RAILWAY CO.

Program Report

Location and SIN

DOT Number: 724825H
Milepost Number: 139.91-W
Site Name: CR 170 E

SIN: 755053306316

MCF and Template Selection

MCF Name: GCP-T6X-02-1.mcf
MCF Revision: 021
MCFCRC: 6076E435

Template = 2D:1 Bi, 5 Rem

Check Numbers

Office Check No. (DT 4.6.0): 41889781
Office Check Number: 41889781
Config. Check Number: 591A80D6
(Based on MCF Revision 021)

Program

BASIC: module configuration
Track 1 Slot = Track
Track 2/RIO 1 Slot = Track
Track 3 Slot = Track
Track 4 Slot = Track
Track 5/RIO 2 Slot = Not Used
Track 6/RIO 3 Slot = Not Used
SSCC-1 Slot = SSCC3i
SSCC-2 Slot = SSCC3i
SEAR Used = Yes

BASIC: MS/GCP operation
Track 1 : MS/GCP Operation = Yes
Track 2 : MS/GCP Operation = Yes
Track 3 : MS/GCP Operation = Yes
Track 4 : MS/GCP Operation = Yes

BASIC: island operation
Track 1 : Island Used = Internal
Track 2 : Island Used = No
Track 3 : Island Used = No
Track 4 : Island Used = No

BASIC: preemption
Preempt Logic = No

BASIC: radio Dax links
Radio DAX link A Used = No
Radio DAX link B Used = No

BASIC: Vital Comms links
Vital Comms link 1 Used = No
Vital Comms link 2 Used = No

PREDICTORS: track 1
Track 1 : Prime Used = Yes
Track 1 : Dax A Used = No
Track 1 : Dax B Used = No
Track 1 : Dax C Used = No
Track 1 : Dax D Used = No
Track 1 : Dax E Used = No
Track 1 : Dax F Used = No
Track 1 : Dax G Used = No

PREDICTORS: track 2
Track 2 : Prime Used = Yes
Track 2 : Dax A Used = No
Track 2 : Dax B Used = No
Track 2 : Dax C Used = No
Track 2 : Dax D Used = No
Track 2 : Dax E Used = No
Track 2 : Dax F Used = No
Track 2 : Dax G Used = No

PREDICTORS: track 3
Track 3 : Prime Used = Yes
Track 3 : Dax A Used = No
Track 3 : Dax B Used = No
Track 3 : Dax C Used = No
Track 3 : Dax D Used = No
Track 3 : Dax E Used = No
Track 3 : Dax F Used = No
Track 3 : Dax G Used = No

PREDICTORS: track 4
Track 4 : Prime Used = Yes
Track 4 : Dax A Used = No
Track 4 : Dax B Used = No
Track 4 : Dax C Used = No
Track 4 : Dax D Used = No
Track 4 : Dax E Used = No
Track 4 : Dax F Used = No
Track 4 : Dax G Used = No

GCP: track 1
Track 1 : GCP Freq Category = Standard
Track 1 : GCP Frequency = 970 Hz
Track 1 : Approach Distance = 141 ft
Track 1 : Uni/Bi/Sim-Bidirnl = Sim. Bidirnl
Track 1 : GCP Transmit Level = Medium
Track 1 : Island Connection = Isl1
Track 1 : Island Distance = 120 ft
Track 1 : Computed Distance = 9999 ft
Track 1 : Linearization Steps = 100

GCP: track 1 enhanced det
Track 1 : Inbound PS Sensitivity = Off
Track 1 : Speed Limiting Used = Yes
Track 1 : Outbound False Act Lvl = Normal
Track 1 : Outbound PS Timer = 20 sec
Track 1 : Trailing Switch Logic = On
Track 1 : Post Joint Detn Time = 15 sec
Track 1 : Adv Appr Predn = No
Track 1 : Cancel Pickup Delay = This Isl

GCP: track 1 prime
Track 1 : Prime Offset Distance = 0 ft
Track 1 : Prime MS/GCP Mode = MS
Track 1 : Prime Pickup Delay = 15 sec
Track 1 : Prime UAX = Not Used

GCP: track 1 pos start
Track 1 : Positive Start = Off
Track 1 : Sudden Shnt Det Used = No
Track 1 : Low EZ Detection Used = No

GCP: track 1 MS Control
Track 1 : MS/GCP Ctrl IP Used = No
Track 1 : MS Sensitivity Level = 0
Track 1 : Compensation Level = 1300
Track 1 : Warn Time-Ballast Comp = High
Track 1 : Low EX Adjustment = 39
Track 1 : Bidirn Dax Passthru = No
Track 1 : False Act on Train Stop = No
Track 1 : EX Limiting Used = Yes
Track 1 : EZ Correction Used = Yes

GCP: track 2
Track 2 : GCP Freq Category = Standard
Track 2 : GCP Frequency = 285 Hz
Track 2 : Approach Distance = 2573 ft
Track 2 : Uni/Bi/Sim-Bidirnl = Sim. Bidirnl
Track 2 : GCP Transmit Level = Medium
Track 2 : Island Connection = Isl1
Track 2 : Island Distance = 0 ft
Track 2 : Computed Distance = 9999 ft
Track 2 : Linearization Steps = 100

GCP: track 2 enhanced det
Track 2 : Inbound PS Sensitivity = Off
Track 2 : Speed Limiting Used = Yes
Track 2 : Outbound False Act Lvl = Normal
Track 2 : Outbound PS Timer = 20 sec
Track 2 : Trailing Switch Logic = Off
Track 2 : Post Joint Detn Time = 15 sec
Track 2 : Adv Appr Predn = No
Track 2 : Cancel Pickup Delay = This Isl

GCP: track 2 prime
Track 2 : Prime Warning Time = 30 sec
Track 2 : Prime Offset Distance = 0 ft
Track 2 : Switch MS EZ Level = 0
Track 2 : Prime MS/GCP Mode = Pred
Track 2 : Prime Pickup Delay = 15 sec
Track 2 : Prime UAX = Not Used

GCP: track 2 pos start
Track 2 : Positive Start = Off
Track 2 : Sudden Shnt Det Used = No
Track 2 : Low EZ Detection Used = No

GCP: track 2 MS Control
Track 2 : MS/GCP Ctrl IP Used = No
Track 2 : MS Sensitivity Level = 0
Track 2 : Compensation Level = 1300
Track 2 : Warn Time-Ballast Comp = Low
Track 2 : Low EX Adjustment = 39
Track 2 : Bidirn Dax Passthru = No
Track 2 : False Act on Train Stop = No
Track 2 : EX Limiting Used = Yes
Track 2 : EZ Correction Used = Yes

GCP: track 3
Track 3 : GCP Freq Category = Standard
Track 3 : GCP Frequency = 348 Hz
Track 3 : Approach Distance = 2401 ft
Track 3 : Uni/Bi/Sim-Bidirnl = Sim. Bidirnl
Track 3 : GCP Transmit Level = Medium
Track 3 : Island Connection = No Islands
Track 3 : Island Distance = 0 ft
Track 3 : Computed Distance = 9999 ft
Track 3 : Linearization Steps = 100

GCP: track 3 enhanced det
Track 3 : Inbound PS Sensitivity = Off
Track 3 : Speed Limiting Used = Yes
Track 3 : Outbound False Act Lvl = Normal
Track 3 : Outbound PS Timer = 20 sec
Track 3 : Trailing Switch Logic = Off
Track 3 : Post Joint Detn Time = 15 sec
Track 3 : Adv Appr Predn = No
Track 3 : Cancel Pickup Delay = This Isl

GCP: track 3 prime
Track 3 : Prime Warning Time = 30 sec
Track 3 : Prime Offset Distance = 141 ft
Track 3 : Switch MS EZ Level = 0
Track 3 : Pickup Delay Mode = Auto
Track 3 : Prime MS/GCP Mode = Pred
Track 3 : Prime Pickup Delay = 15 sec
Track 3 : Prime UAX = Not Used

GCP: track 3 pos start
Track 3 : Positive Start = Off
Track 3 : Sudden Shnt Det Used = No
Track 3 : Low EZ Detection Used = No

GCP: track 3 MS Control
Track 3 : MS/GCP Ctrl IP Used = No
Track 3 : MS Sensitivity Level = 0
Track 3 : Compensation Level = 1300
Track 3 : Warn Time-Ballast Comp = Low
Track 3 : Low EX Adjustment = 39
Track 3 : Bidirn Dax Passthru = No
Track 3 : False Act on Train Stop = No
Track 3 : EX Limiting Used = Yes
Track 3 : EZ Correction Used = Yes

GCP: track 4
Track 4 : GCP Freq Category = Standard
Track 4 : GCP Frequency = 790 Hz
Track 4 : Approach Distance = 1000 ft
Track 4 : Uni/Bi/Sim-Bidirnl = Unidirnl
Track 4 : GCP Transmit Level = Medium
Track 4 : Island Connection = No Islands
Track 4 : Island Distance = 0 ft
Track 4 : Computed Distance = 9999 ft
Track 4 : Linearization Steps = 100

4000 GCP PROGRAMMING SETUP

DESIGNED BY: TAH 07-01-15	NORFOLK SOUTHERN		
DRAWN BY: RSD 07-01-15	OFFICE OF ASS'T. VICE PRESIDENT COMM. & SIGNAL, ATLANTA, GA.	M.P.:	139.91-W
CHECKED BY: JAR 07-01-15	BELLMONT, IL FLGS AT CR 170 E		
	SOUTHERN WEST	FILE No.	R-
IN SERVICE: - -	CADD or DWG. No. SE9947P.08	SHEET No.	8 of 27

REVISION INITIALS

PROPERTY
NORFOLK SOUTHERN RAILWAY CO.

GCP: track 4 enhanced det
Track 4 : Inbound PS Sensitivity = Off
Track 4 : Speed Limiting Used = Yes
Track 4 : Outbound False Act Lvl = Normal
Track 4 : Outbound PS Timer = 20 sec
Track 4 : Trailing Switch Logic = Off
Track 4 : Post Joint Detn Time = 15 sec
Track 4 : Adv Appr Predn = No
Track 4 : Cancel Pickup Delay = This Isl

GCP: track 4 prime
Track 4 : Prime Warning Time = 30 sec
Track 4 : Prime Offset Distance = 141 ft
Track 4 : Switch MS EZ Level = 0
Track 4 : Pickup Delay Mode = Auto
Track 4 : Prime MS/GCP Mode = Pred
Track 4 : Prime Pickup Delay = 15 sec
Track 4 : Prime UAX = Not Used

GCP: track 4 pos start
Track 4 : Positive Start = Off
Track 4 : Sudden Shnt Det Used = No
Track 4 : Low EZ Detection Used = No

GCP: track 4 MS Control
Track 4 : MS/GCP Ctrl IP Used = No
Track 4 : MS Sensitivity Level = 0
Track 4 : Compensation Level = 1300
Track 4 : Warn Time-Ballast Comp = Low
Track 4 : Low EX Adjustment = 39
Track 4 : Bidirn Dax Passthru = No
Track 4 : False Act on Train Stop = No
Track 4 : EX Limiting Used = Yes
Track 4 : EZ Correction Used = Yes

ISLAND: track 1
Track 1 : Isl Frequency = 15.2 kHz
Track 1 : Pickup Delay (2s +) = 0 sec
Track 1 : Isl Enable IP Used = No

AND: track Anding
AND 1 XR Used = Yes
AND 2 Used = No
AND 3 Used = No
AND 4 Used = No
AND 5 Used = No
AND 6 Used = No
AND 7 Used = No
AND 8 Used = No

AND: AND 1 XR
AND 1 XR Track 1 = Prime
AND 1 XR Track 2 = Prime
AND 1 XR Track 3 = Prime
AND 1 XR Track 4 = Prime
AND 1 Enable Used = Yes
And 1 Enable Pickup = 5 sec
AND 1 Enable Drop = 0 sec
AND 1 Wrap Used = No

ADVANCED: MS restart
MS/GCP Restart Used = No

ADVANCED: out of service
OOS Control = Display+OOS IPs
OOS Timeout = Yes
OOS Timeout = 1 hrs

ADVANCED: out of service 2
T1 OOS Control = OOS Input 1
T2 OOS Control = OOS Input 1
T3 OOS Control = OOS Input 1
T4 OOS Control = OOS Input 1

ADVANCED: track wrap circuits
Wrap LOS Timer = 5 sec
Track 1 Wrap Used = No
Track 2 Wrap Used = No
Track 3 Wrap Used = No
Track 4 Wrap Used = No

ADVANCED: trk 1 overrides
Track 1 : All Predictors Override Used = No

ADVANCED: trk 2 overrides
Track 2 : All Predictors Override Used = No

ADVANCED: trk 3 overrides
Track 3 : All Predictors Override Used = No

ADVANCED: trk 4 overrides
Track 4 : All Predictors Override Used = No

ADVANCED: OR logic
OR 1 Used = No
OR 2 Used = No
OR 3 Used = No
OR 4 Used = No

ADVANCED: internal I/O 1
Pass Thrus = No
Int.1 Sets = Not Used
Int.1 Set by = Not Used
Int.2 Sets = Not Used
Int.2 Set by = Not Used
Int.3 Sets = Not Used
Int.3 Set by = Not Used
Int.4 Sets = Not Used
Int.4 Set by = Not Used

ADVANCED: internal I/O 2
Int.5 Sets = Not Used
Int.5 Set by = Not Used
Int.6 Sets = Not Used
Int.6 Set by = Not Used
Int.7 Sets = Not Used
Int.7 Set by = Not Used
Int.8 Sets = Not Used
Int.8 Set by = Not Used

ADVANCED: internal I/O 3
Int.9 Sets = Not Used
Int.9 Set by = Not Used
Int.10 Sets = Not Used
Int.10 Set by = Not Used
Int.11 Sets = Not Used
Int.11 Set by = Not Used
Int.12 Sets = Not Used
Int.12 Set by = Not Used

ADVANCED: internal I/O 4
Int.13 Sets = Not Used
Int.13 Set by = Not Used
Int.14 Sets = Not Used
Int.14 Set by = Not Used
Int.15 Sets = Not Used
Int.15 Set by = Not Used
Int.16 Sets = Not Used
Int.16 Set by = Not Used

ADVANCED: site options
Daylight Savings = On
Units = Standard
Maint Call Rpt IP Used = No
Emergency Activate IP = No
EZ/EX Logging = Change
EZ/EX Point Change = 3

SSCC
Gates Used = Yes
SSCC1+2 GPs Coupled = Yes
Min Activation = 0 sec
Rmt Activation Cancel = 2 min
Bell On Gate Rising = No
Mute Bell On Gate Down = No
SSCCIV Controller Used = No

SSCC: 1
SSCC-1 Activation = AND 1 XR
SSCC-1 Gate Delay = 6 sec
SSCC-1 Number of GPs = 1
SSCC-1 Number of GDs = 2
SSCC 1 : Flash Rate = 40
SSCC 1 : Low Battery Detection = No
SSCC 1 : Flash Sync = master
SSCC 1 : Invert Gate Output = No
SSCC 1 : Lamp Neutral Test = Off
Aux-1 Xng Ctrl Used = No

SSCC: 2
SSCC-2 Activation = AND 1 XR
SSCC-2 Gate Delay = 6 sec
SSCC-2 Number of GPs = 0
SSCC-2 Number of GDs = 0
SSCC 2 : Flash Rate = 40
SSCC 2 : Low Battery Detection = No
SSCC 2 : Flash Sync = slave
SSCC 2 : Invert Gate Output = No
SSCC 2 : Lamp Neutral Test = Off
Aux-2 Xng Ctrl Used = No

OUTPUT: assignment page 1
OUT 1.1 = Not Used
OUT 1.2 = Not Used
OUT 2.1 = Not Used
OUT 2.2 = Not Used
OUT 3.1 = Not Used
OUT 3.2 = Not Used
OUT 4.1 = Not Used
OUT 4.2 = Not Used

INPUT: assignment page 1
IN 1.1 = Not Used
IN 1.2 = Not Used
IN 2.1 = Not Used
IN 2.2 = Not Used
IN 3.1 = Not Used
IN 3.2 = Not Used
IN 4.1 = Not Used
IN 4.2 = Not Used

IO: assignment SSCC
OUT GC 1 = Gate Output 1
OUT GC 2 = Gate Output 2
IN 7.1 = Not Used
IN 7.2 = GD 1.2
IN 7.3 = AND 1 XR Enable
IN 7.4 = GD 1.1
IN 7.5 = GP 1.1
IN 8.1 = Out Of Service IP 1
IN 8.2 = Not Used
IN 8.3 = Not Used
IN 8.4 = Not Used
IN 8.5 = Not Used

SEAR
SEAR Subnode = 3
DI 1 = Not Used
DI 2 = Not Used
Rly 1 = General 1
Rly 2 = Not Used

SEAR: inputs
SP 2.1 = POK 1
SP 3.1 = Not Used
SP 4.1 = Not Used
SP 5.1 = Not Used
SP 6.1 = Not Used

SEAR: slot 1-4 inputs
IN 1.1 = Not Used
IN 1.2 = Not Used
IN 2.1 = Not Used
IN 2.2 = Not Used
IN 3.1 = Not Used
IN 3.2 = Not Used
IN 4.1 = Not Used
IN 4.2 = Not Used

SEAR: inputs slot 5
IN 5.1 = Not Used
IN 5.2 = Not Used

SEAR: inputs slot 6
IN 6.1 = Not Used
IN 6.2 = Not Used

SEAR: slot 7-8 inputs
IN 7.1 = Not Used
IN 8.2 = Not Used
IN 8.3 = Not Used
IN 8.4 = Not Used
IN 8.5 = Not Used

SITE: programming
Radio Subnode = 1
Field Password = Off
Low Battery Enabled = Off

Configuration Package File

Filename: SE9947.pac

4000 GCP PROGRAMMING SETUP

DESIGNED BY: TAH 07-01-15	NORFOLK SOUTHERN		
DRAWN BY: RSD 07-01-15	OFFICE OF ASS'T. VICE PRESIDENT COMM. & SIGNAL, ATLANTA, GA.	M.P.:	139.91-W
CHECKED BY: JAR 07-01-15	BELLMONT, IL FLGS AT CR 170 E		
IN SERVICE: - -	SOUTHERN WEST	FILE No.	R-
	CADD or DWG. No. SE9947P.09	SHEET No.	9 of 27

REVISION INITIALS

PROPERTY
NORFOLK SOUTHERN RAILWAY CO.

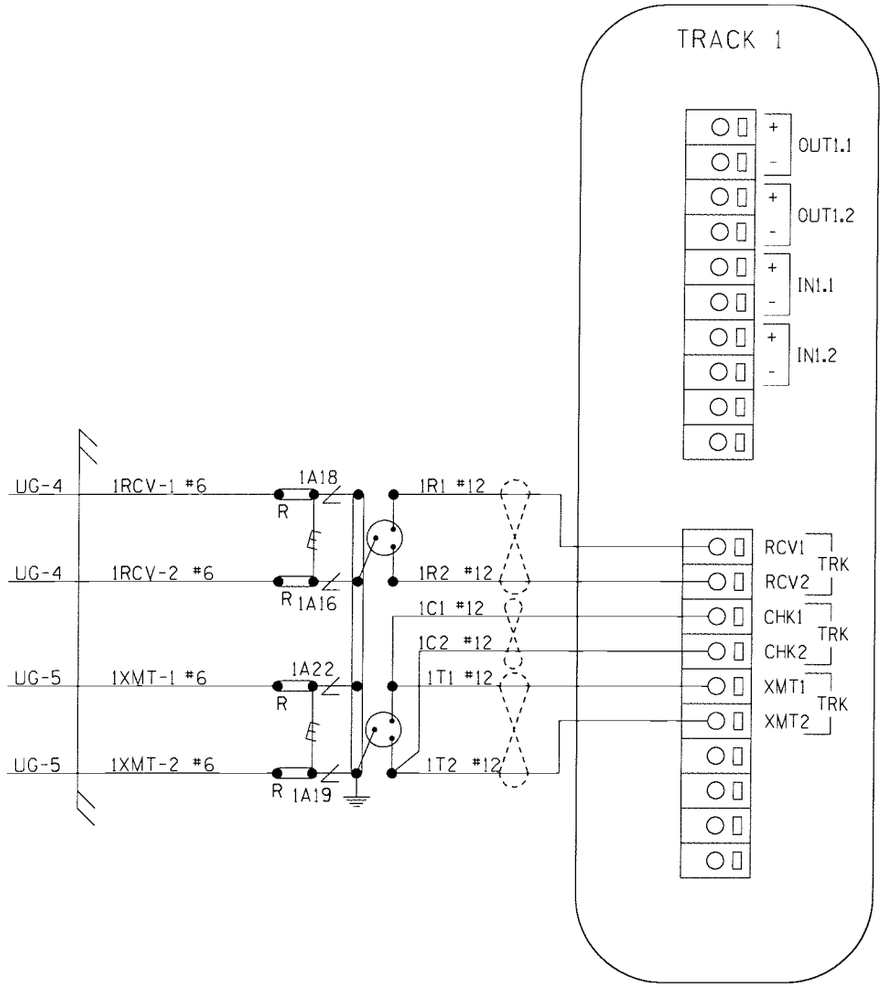

NOTES:
ALL WIRING TO BE #16AWG
UNLESS NOTED OTHERWISE.

= TWIST

CONNECTORS FOR TRACK MODULES

DESIGNED BY: TAH 07-01-15	NORFOLK SOUTHERN		
DRAWN BY: RSD 07-01-15	OFFICE OF ASS'T. VICE PRESIDENT COMM. & SIGNAL, ATLANTA, GA.	M.P.:	139.91-W
CHECKED BY: JAR 07-01-15	BELLMONT, IL FLGS AT CR 170 E		
IN SERVICE: - -	SOUTHERN WEST	FILE No. R-	
	CADD or DWG. No. SE9947P.10	SHEET No. 10	of 27

REVISION INITIALS

PROPERTY
NORFOLK SOUTHERN RAILWAY CO.

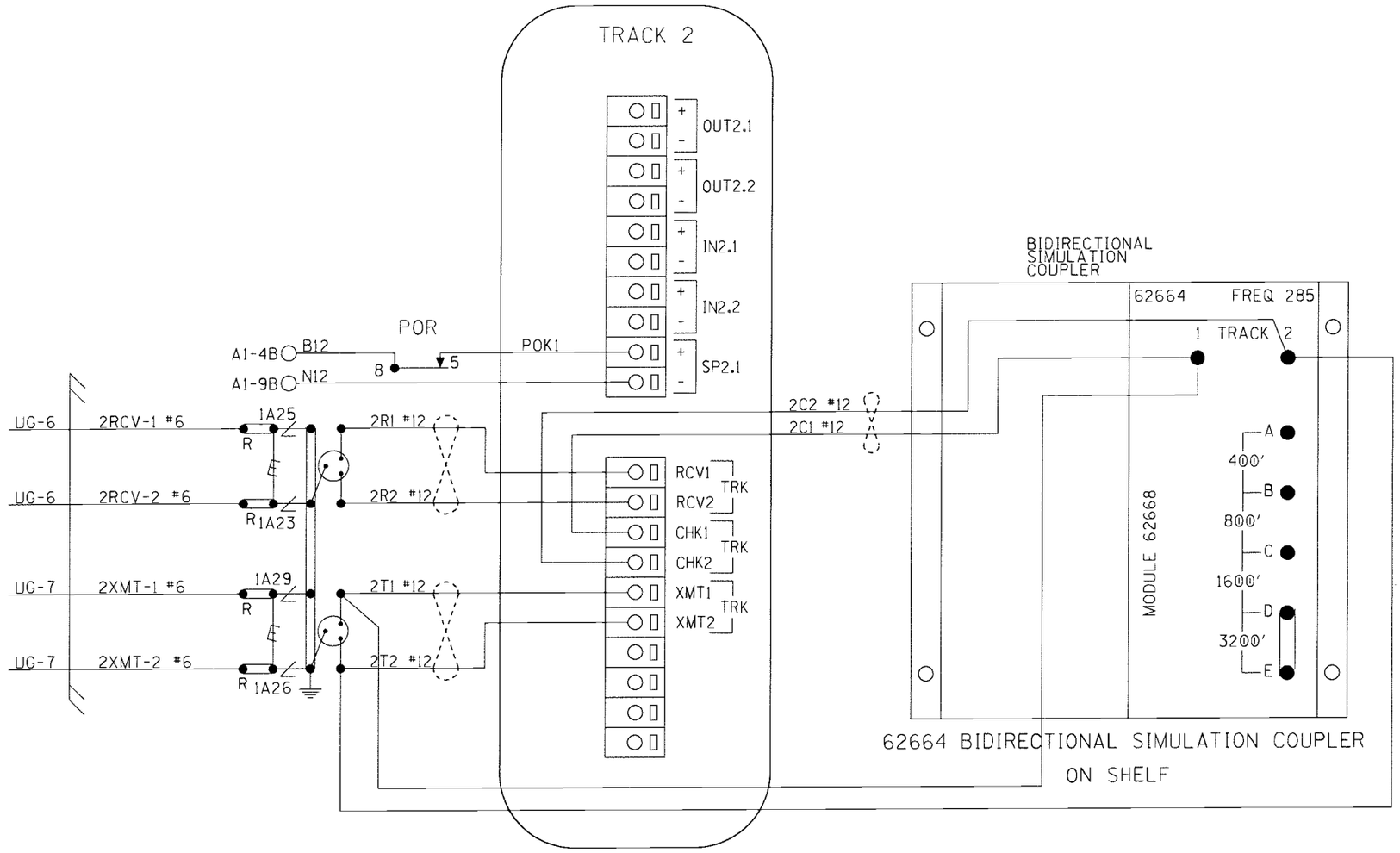

CONNECTORS FOR TRACK MODULES

NOTES:
ALL WIRING TO BE #16AWG
UNLESS NOTED OTHERWISE.

= TWIST

DESIGNED BY: TAH 07-01-15	NORFOLK SOUTHERN		
DRAWN BY: RSD 07-01-15	OFFICE OF ASS'T. VICE PRESIDENT COMM. & SIGNAL, ATLANTA, GA.	M.P.:	139.91-W
CHECKED BY: JAR 07-01-15	BELLMONT, IL FLGS AT CR 170 E		
IN SERVICE: - -	SOUTHERN WEST	FILE No.	R-
	CADD or DWG. No. SE9947P.11	SHEET No.	11 of 27

REVISION INITIALS

PROPERTY
NORFOLK SOUTHERN RAILWAY CO.

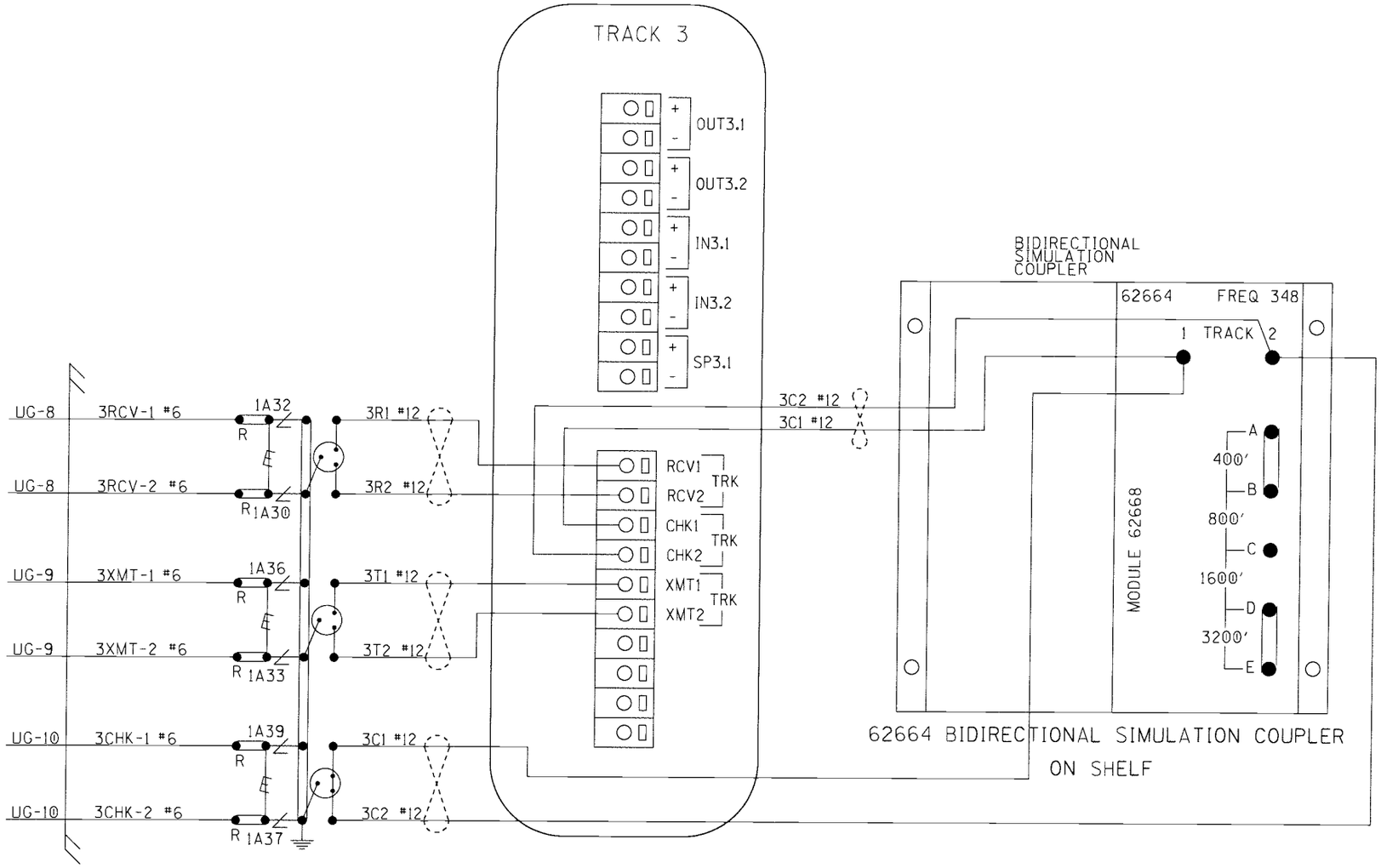

CONNECTORS FOR TRACK MODULES

NOTES:
ALL WIRING TO BE #16AWG UNLESS NOTED OTHERWISE.

= TWIST

DESIGNED BY: TAH 07-01-15	NORFOLK SOUTHERN		
DRAWN BY: RSD 07-01-15	OFFICE OF ASS'T. VICE PRESIDENT COMM. & SIGNAL, ATLANTA, GA.	M.P.: 139.91-W	
CHECKED BY: JAR 07-01-15	BELLMONT, IL FLGS AT CR 170 E		
IN SERVICE: - -	SOUTHERN WEST	FILE No. R-	
	CADD or DWG. No. SE9947P.12	SHEET No. 12 of 27	

REVISION INITIALS

PROPERTY
NORFOLK SOUTHERN RAILWAY CO.

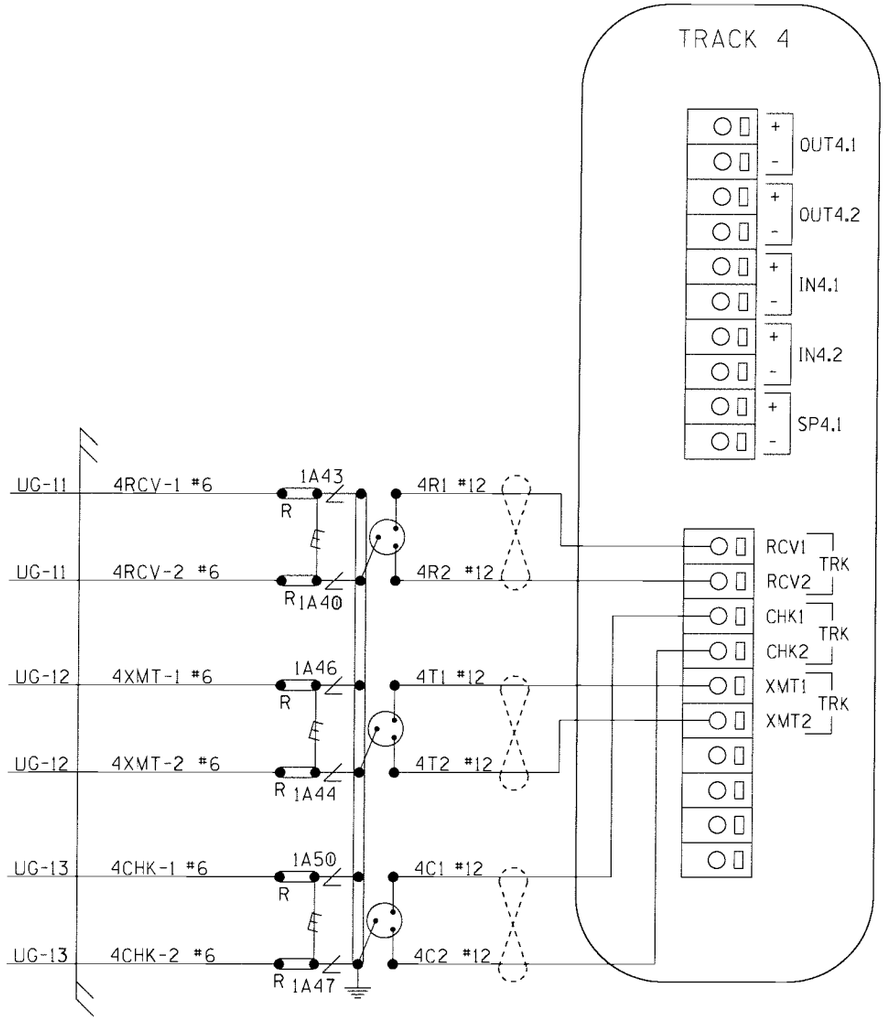

NOTES:
ALL WIRING TO BE #16AWG
UNLESS NOTED OTHERWISE.

= TWIST

CONNECTORS FOR TRACK MODULES

DESIGNED BY: TAH 07-01-15	NORFOLK SOUTHERN		
DRAWN BY: RSD 07-01-15	OFFICE OF ASS'T. VICE PRESIDENT COMM. & SIGNAL, ATLANTA, GA.	M.P.: 139.91-W	
CHECKED BY: JAR 07-01-15	BELLMONT, IL FLGS AT CR 170 E		
IN SERVICE: - -	SOUTHERN WEST	FILE No. R-	
	CADD or DWG. No. SE9947P.13	SHEET No. 13 of 27	

REVISION INITIALS

PROPERTY
NORFOLK SOUTHERN RAILWAY CO.

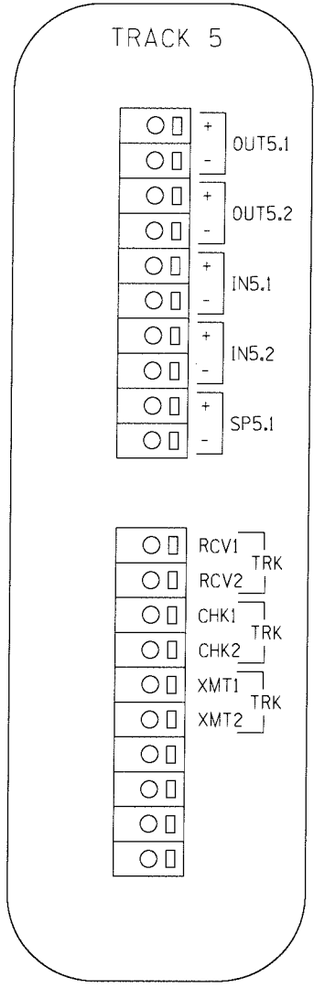

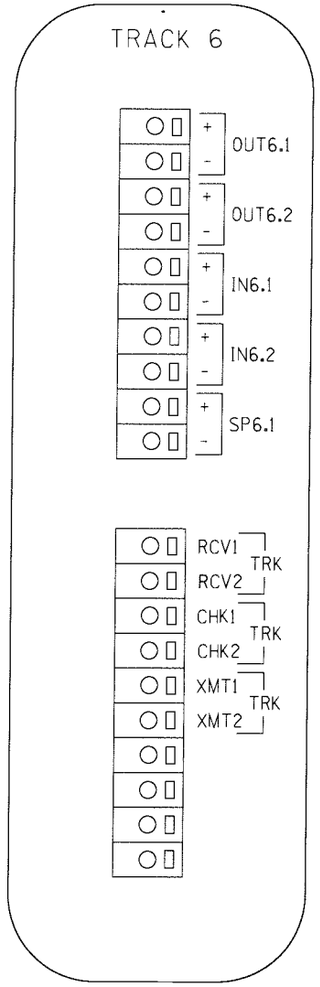

CONNECTORS FOR TRACK MODULES

NOTES:
ALL WIRING TO BE #16AWG
UNLESS NOTED OTHERWISE.

= TWIST

DESIGNED BY: TAH 07-01-15	NORFOLK SOUTHERN		
DRAWN BY: RSD 07-01-15	OFFICE OF ASS'T. VICE PRESIDENT COMM. & SIGNAL, ATLANTA, GA.	M.P.:	139.91-W
CHECKED BY: JAR 07-01-15	BELLMONT, IL FLGS AT CR 170 E		
IN SERVICE: - -	SOUTHERN WEST	FILE No. R-	
	CADD or DWG. No. SE9947P.14	SHEET No. 14	of 27

REVISION INITIALS										

PROPERTY
NORFOLK SOUTHERN RAILWAY CO.

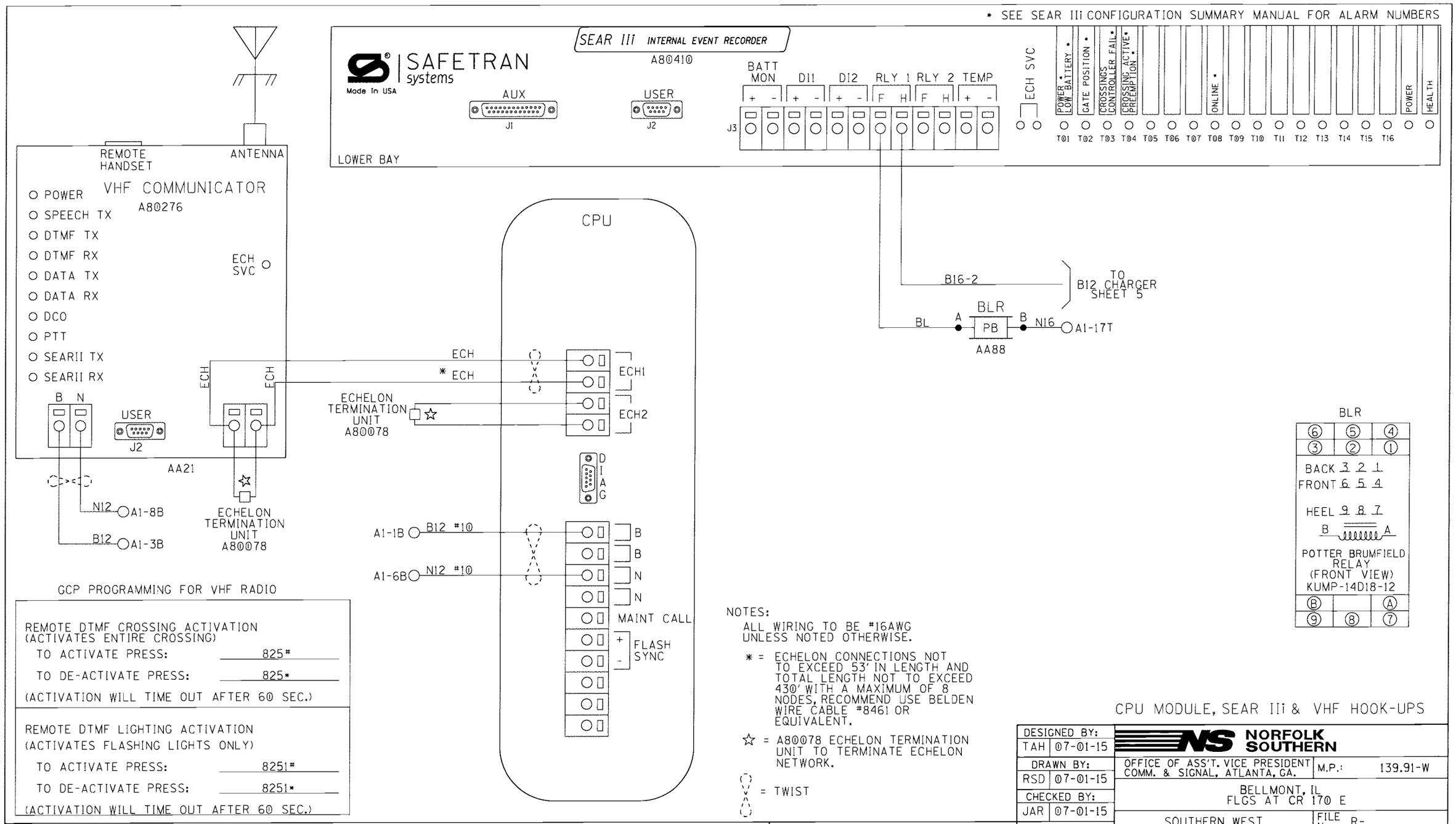
* SEE SEAR III CONFIGURATION SUMMARY MANUAL FOR ALARM NUMBERS
SAFETRAN systems
Made In USA
SEAR III INTERNAL EVENT RECORDER
A80410
AUX
J1
USER
J2
BATT MON
DI1
DI2
RLY 1
RLY 2
TEMP
J3
ECH SVC
POWER LOW BATTERY *
GATE POSITION *
CROSSINGS CONTROLLER FAIL *
CROSSING ACTIVE PREEMPTION *
ONLINE *
POWER
HEALTH
T01 T02 T03 T04 T05 T06 T07 T08 T09 T10 T11 T12 T13 T14 T15 T16
LOWER BAY
REMOTE HANDSET
ANTENNA
VHF COMMUNICATOR
A80276
POWER
SPEECH TX
DTMF TX
DTMF RX
DATA TX
DATA RX
DCO
PTT
SEARII TX
SEARII RX
ECH SVC
B N
USER
J2
AA21
ECH
ECH
N12
A1-8B
B12
A1-3B
ECHELON TERMINATION UNIT
A80078
CPU
ECH
* ECH
ECHELON TERMINATION UNIT
A80078
ECH1
ECH2
DIAG
A1-1B
B12 #10
A1-6B
N12 #10
B
B
N
N
MAINT CALL
FLASH SYNC
B16-2
TO B12 CHARGER SHEET 5
BLR
BL
A
PB
B
N16
A1-17T
AA88
BLR
BACK 3 2 1
FRONT 6 5 4
HEEL 9 8 7
B A
POTTER BRUMFIELD RELAY (FRONT VIEW) KUMP-14D18-12
NOTES:
ALL WIRING TO BE #16AWG UNLESS NOTED OTHERWISE.
* = ECHELON CONNECTIONS NOT TO EXCEED 53' IN LENGTH AND TOTAL LENGTH NOT TO EXCEED 430' WITH A MAXIMUM OF 8 NODES, RECOMMEND USE BELDEN WIRE CABLE #8461 OR EQUIVALENT.
☆ = A80078 ECHELON TERMINATION UNIT TO TERMINATE ECHELON NETWORK.
= TWIST
GCP PROGRAMMING FOR VHF RADIO
REMOTE DTMF CROSSING ACTIVATION (ACTIVATES ENTIRE CROSSING)
TO ACTIVATE PRESS: 825#
TO DE-ACTIVATE PRESS: 825*
(ACTIVATION WILL TIME OUT AFTER 60 SEC.)
REMOTE DTMF LIGHTING ACTIVATION (ACTIVATES FLASHING LIGHTS ONLY)
TO ACTIVATE PRESS: 8251#
TO DE-ACTIVATE PRESS: 8251*
(ACTIVATION WILL TIME OUT AFTER 60 SEC.)
CPU MODULE, SEAR III & VHF HOOK-UPS
DESIGNED BY: TAH 07-01-15
DRAWN BY: RSD 07-01-15
CHECKED BY: JAR 07-01-15
IN SERVICE: - -
NORFOLK SOUTHERN
OFFICE OF ASS'T. VICE PRESIDENT COMM. & SIGNAL, ATLANTA, GA.
M.P.: 139.91-W
BELLMONT, IL
FLGS AT CR 170 E
SOUTHERN WEST
FILE No. R-
CADD or DWG. No. SE9947P.15
SHEET No. 15 of 27
REVISION INITIALS
PROPERTY
NORFOLK SOUTHERN RAILWAY CO.

	SITE SET UP PROCEDURE	
	FUNCTION	LED DISPLAY
	DATE/TIME	
	AUTOMATIC DST ADJUSTMENT	YES
	TIME ZONE	CST
	SITE NAME	CR 170 E
	MILEPOST	139.91-W
	DOT #	724825H
	TESTER TYPE	CROSSING
	DATE FORMAT	MM-DD-YYYY
	TEMP FORMAT	FAHRENHEIT
	INDICATE HOLD (SEC)	0
	INDICATE REFRESH (SEC)	60
	SITE ATCS	7.550.533.063.03.01
	SITE TYPE	NO COMMUNICATION
**	OFFICE ATCS ADDRESS	2.550.01.9100
**	PRIMARY HOP ADDR	7.RRR.LLL.GGG.XX.XX
**	BACKUP HOP ADDR 1	7.RRR.LLL.GGG.XX.XX
**	BACKUP HOP ADDR 2	7.RRR.LLL.GGG.XX.XX
**	POLL ID	1
**	MODE	GEN/ATCS
**	WAMS XID	DISABLED
**	OFFICE COMM DEVICE	MCM (ECHELON)
**	RADIO ATCS ADDR	7.RRR.LLL.GGG.01.01
**	PHONE #	(OFFICE NUMBER)
**	INIT STRING	
**	FIELD COMM DEVICE	NONE
***	USER PORT BAUD	57600
***	USER PORT DATA BITS	8
***	USER PORT PARITY	NONE
***	USER PORT STOP BITS	1
***	USER PORT FLOW CONTROL	NONE
***	AUX PORT BAUD	9600
***	AUX PORT DATA BITS	8
***	AUX PORT PARITY	NONE
***	AUX PORT STOP BITS	1
***	AUX PORT FLOW CONTROL	NONE

	CONTROL SYSTEM CONFIGURATION MENU QUESTIONS	
	THE QUESTION	SELECT FROM MENU OPTION
	RESET NAMES AND MODULES?	YES
	RAILROAD NUMBER	550
	CROSSING CONFIGURATION	NORMAL
	AND 1 USED AS XR?	YES
	AND 2 USED AS XR?	NO
	AND 3 USED AS XR?	NO
	AND 4 USED AS XR?	NO
	AND 5 USED AS XR?	NO
	AND 6 USED AS XR?	NO
	AND 7 USED AS XR?	NO
	AND 8 USED AS XR?	NO
*	XR CONTROLLED BY FOREIGN RR	
	ENTRANCE GATES	2
	85% VOLTAGE RELAY OUT	YES
*	GATES CONTROLLED BY FOREIGN RR	
	BATTERY BANKS	2
	BATTERY MON USED	NO
	PREEMPTION	NO
	INTERNAL CROSSING CONTROLLERS	2
	EXTERNAL CROSSING CONTROLLERS	0
	VHF COMMUNICATOR	YES
	DTMF ACTIVATION	YES
****	ACTIVATION CODE	825
	ACTIVATION TIMEOUT (SECONDS)	60
	ILOD MODULES	0
*****	ANY LED BULBS USED	YES
	VHF VOICE CHANNEL	2
	VHF DATA CHANNEL	2
	USE CELL MODEM NON-CRITICAL FEATURE	NO

PROGRAM MENU QUESTIONS	PROGRAM
EDIT DIGITAL INPUTS	NO
EDIT BATTERIES	NO
EDIT RELAYS	NO
EDIT INDICATOR LEDS	NO
EDIT TEST LEDS	NO
EDIT ILOD SENSORS	NO
EDIT VHF SETTINGS	NO
GCP4K ATCS SUBNODE	16

NOTES:

* = DISPLAYED IF CROSSING CONFIGURATION IS SPLIT GATE.

** = IF SITE TYPE = NO COMMUNICATION, THEN THESE OPTIONS ARE NOT DISPLAYED.

*** = THESE SETTINGS SHOULD BE LEFT AT THE DEFAULT SETTING.

**** = USE LAST 3 NUMBERS FROM DOT NUMBER.

***** = IF ILOD MODULE >0.

TO CONFIGURE SEARIII PRESS SITE SETUP KEY.
USE ARROW KEYS TO MAKE SELECTION,
PRESS ENTER AFTER SELECTION HAS BEEN MADE.

SEAR III PROGRAMMING SETUP

DESIGNED BY: TAH 07-01-15	NORFOLK SOUTHERN		
DRAWN BY: RSD 07-01-15	OFFICE OF ASS'T. VICE PRESIDENT COMM. & SIGNAL, ATLANTA, GA.	M.P.:	139.91-W
CHECKED BY: JAR 07-01-15	BELLMONT, IL FLGS AT CR 170 E		
IN SERVICE: - -	SOUTHERN WEST	FILE No.	R-
	CADD or DWG. No. SE9947P.16	SHEET No.	16 of 27

REVISION INITIALS

PROPERTY
NORFOLK SOUTHERN RAILWAY CO.

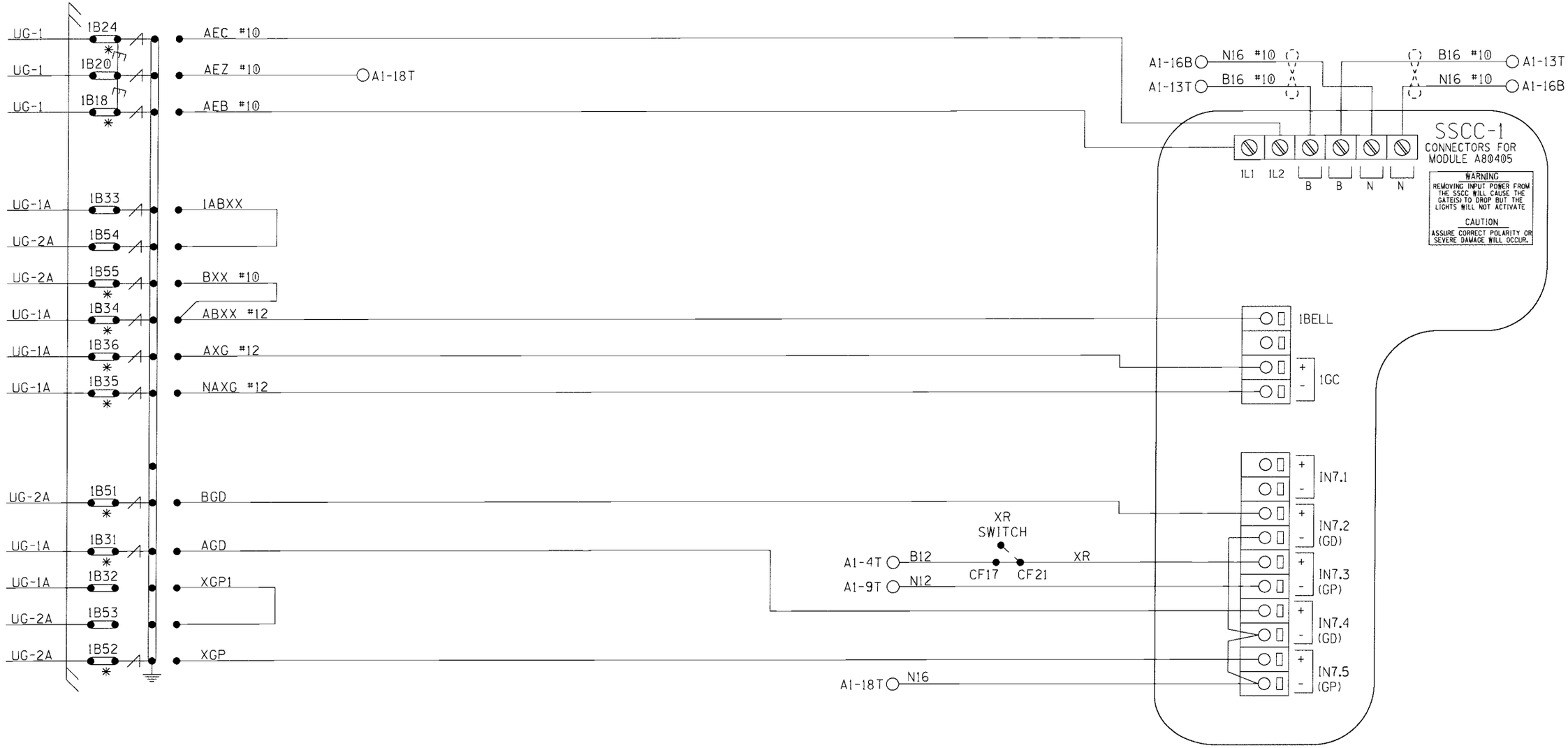

NOTES: ALL WIRING TO BE #16AWG UNLESS NOTED OTHERWISE.

* = TEST LINKS MUST BE OPENED TEMPORARILY FOR NEW COLD START OF NEW OR REPLACEMENT SSCC MODULE AND CAN ONLY BE CLOSED IN SEQUENCE WITH MFR. INSTRUCTIONS: SECTION 8 OF THE GCP 4000 REFERENCE MANUAL.

= TWIST

SSCC#1 MODULE HOOK-UP

DESIGNED BY: TAH 07-01-15	NORFOLK SOUTHERN		
DRAWN BY: RSD 07-01-15	OFFICE OF ASS'T. VICE PRESIDENT COMM. & SIGNAL, ATLANTA, GA.	M.P.:	139.91-W
CHECKED BY: JAR 07-01-15	BELLMONT, IL FLGS AT CR 170 E		
IN SERVICE: - -	SOUTHERN WEST	FILE No. R-	
	CADD or DWG. No. SE9947P.17	SHEET No. 17	of 27

REVISION INITIALS

PROPERTY
NORFOLK SOUTHERN RAILWAY CO.

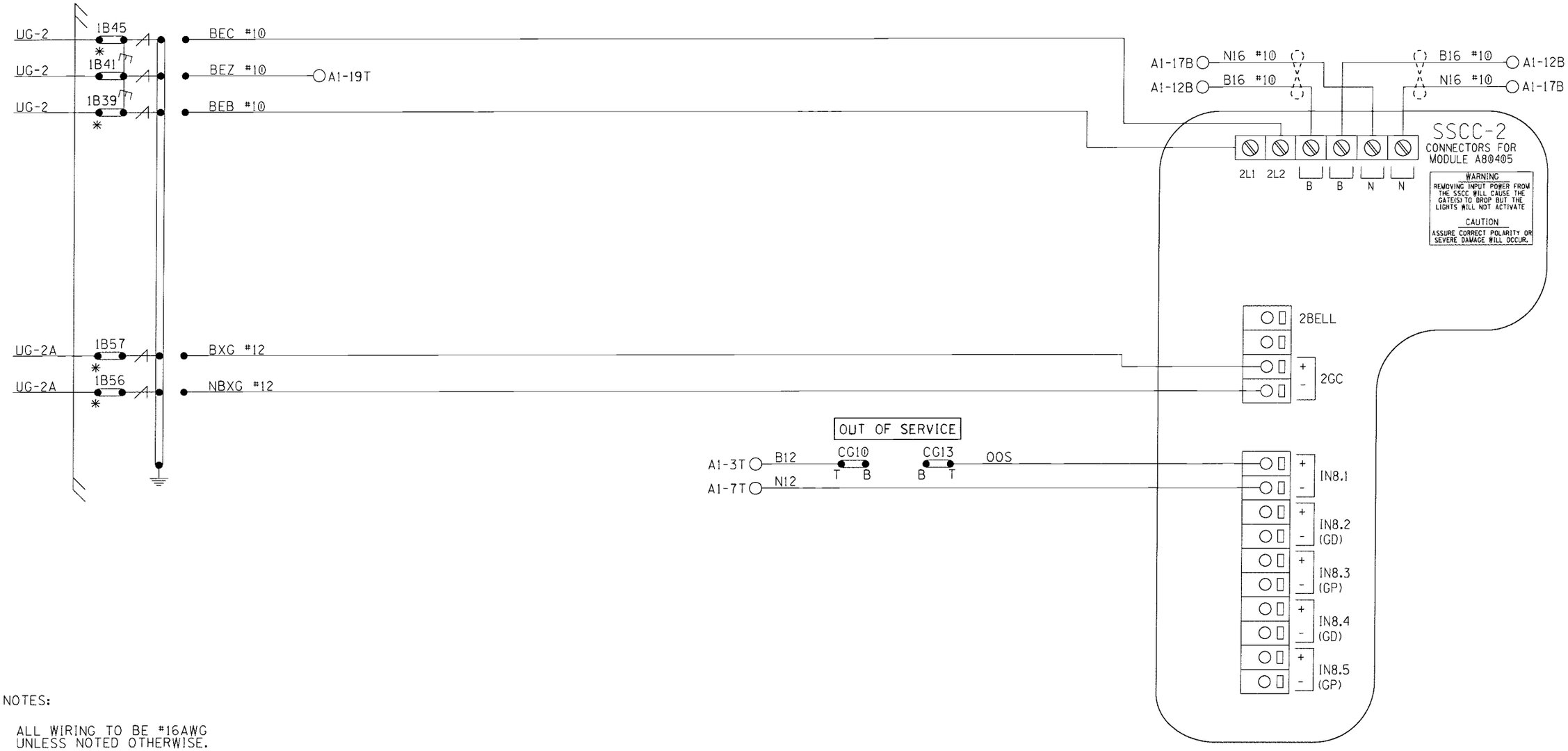

NOTES:

ALL WIRING TO BE #16AWG
UNLESS NOTED OTHERWISE.

* = TEST LINKS MUST BE OPENED TEMPORARILY FOR NEW COLD START OF NEW OR REPLACEMENT SSCC MODULE AND CAN ONLY BE CLOSED IN SEQUENCE WITH MFR. INSTRUCTIONS: SECTION 8 OF THE GCP 4000 REFERENCE MANUAL.

= TWIST

SSCC#2 MODULE HOOK-UP

DESIGNED BY: TAH 07-01-15	NORFOLK SOUTHERN		
DRAWN BY: RSD 07-01-15	OFFICE OF ASS'T. VICE PRESIDENT COMM. & SIGNAL, ATLANTA, GA.	M.P.:	139.91-W
CHECKED BY: JAR 07-01-15	BELLMONT, IL FLGS AT CR 170 E		
IN SERVICE: - -	SOUTHERN WEST	FILE No. R-	
	CADD or DWG. No. SE9947P.18	SHEET No. 18	of 27

REVISION INITIALS

PROPERTY
NORFOLK SOUTHERN RAILWAY CO.

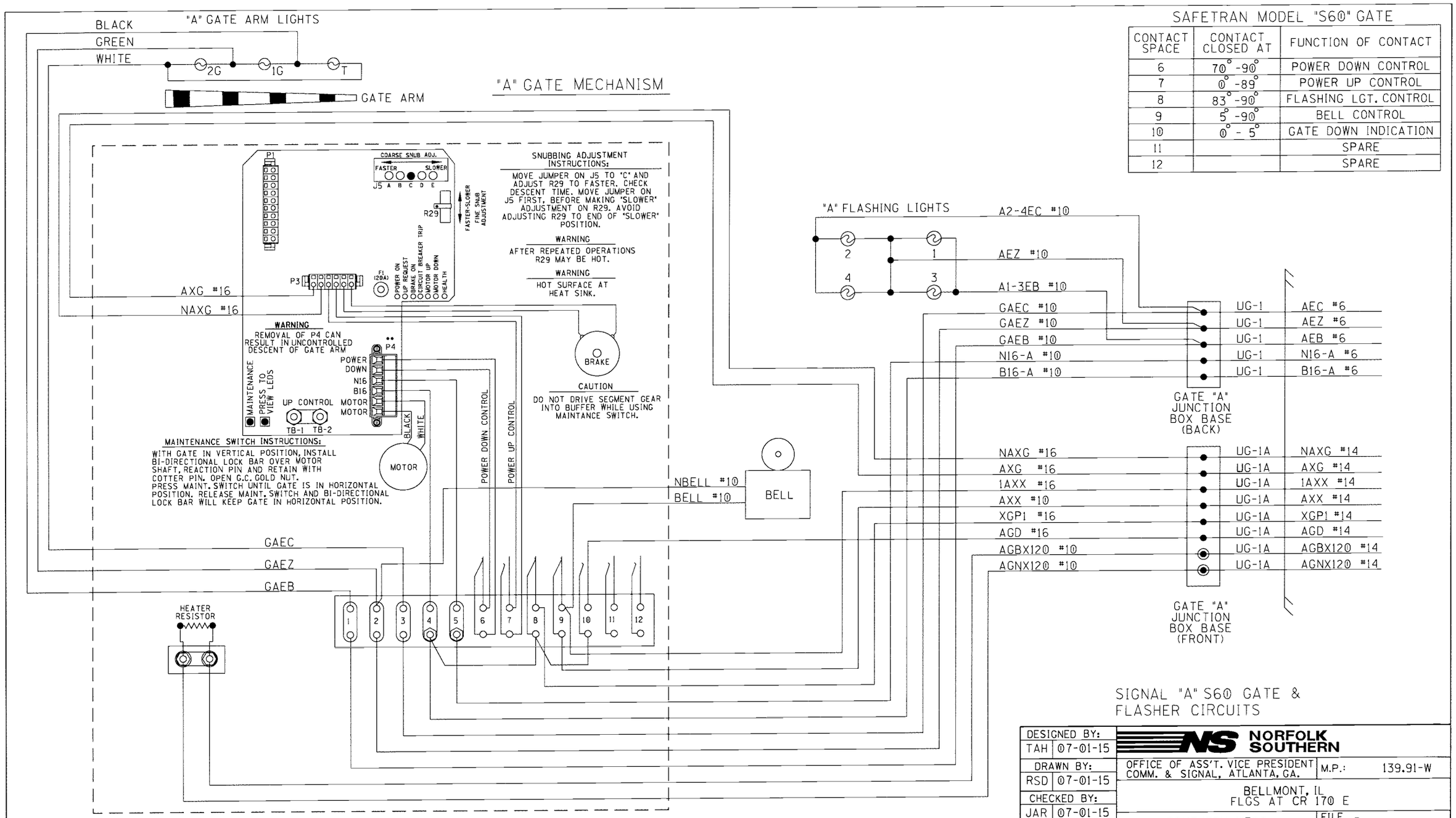

SAFETRAN MODEL "S60" GATE

CONTACT SPACE	CONTACT CLOSED AT	FUNCTION OF CONTACT
6	70° -90°	POWER DOWN CONTROL
7	0° -89°	POWER UP CONTROL
8	83° -90°	FLASHING LGT. CONTROL
9	5° -90°	BELL CONTROL
10	0° - 5°	GATE DOWN INDICATION
11		SPARE
12		SPARE

SIGNAL "A" S60 GATE & FLASHER CIRCUITS

DESIGNED BY: TAH 07-01-15	NORFOLK SOUTHERN		
DRAWN BY: RSD 07-01-15	OFFICE OF ASS'T. VICE PRESIDENT COMM. & SIGNAL, ATLANTA, GA.	M.P.:	139.91-W
CHECKED BY: JAR 07-01-15	BELLMONT, IL FLGS AT CR 170 E		
IN SERVICE: - -	SOUTHERN WEST	FILE No. R-	
	CADD or DWG. No. SE9947P.19	SHEET No. 19 of 27	

REVISION INITIALS

PROPERTY
NORFOLK SOUTHERN RAILWAY CO.

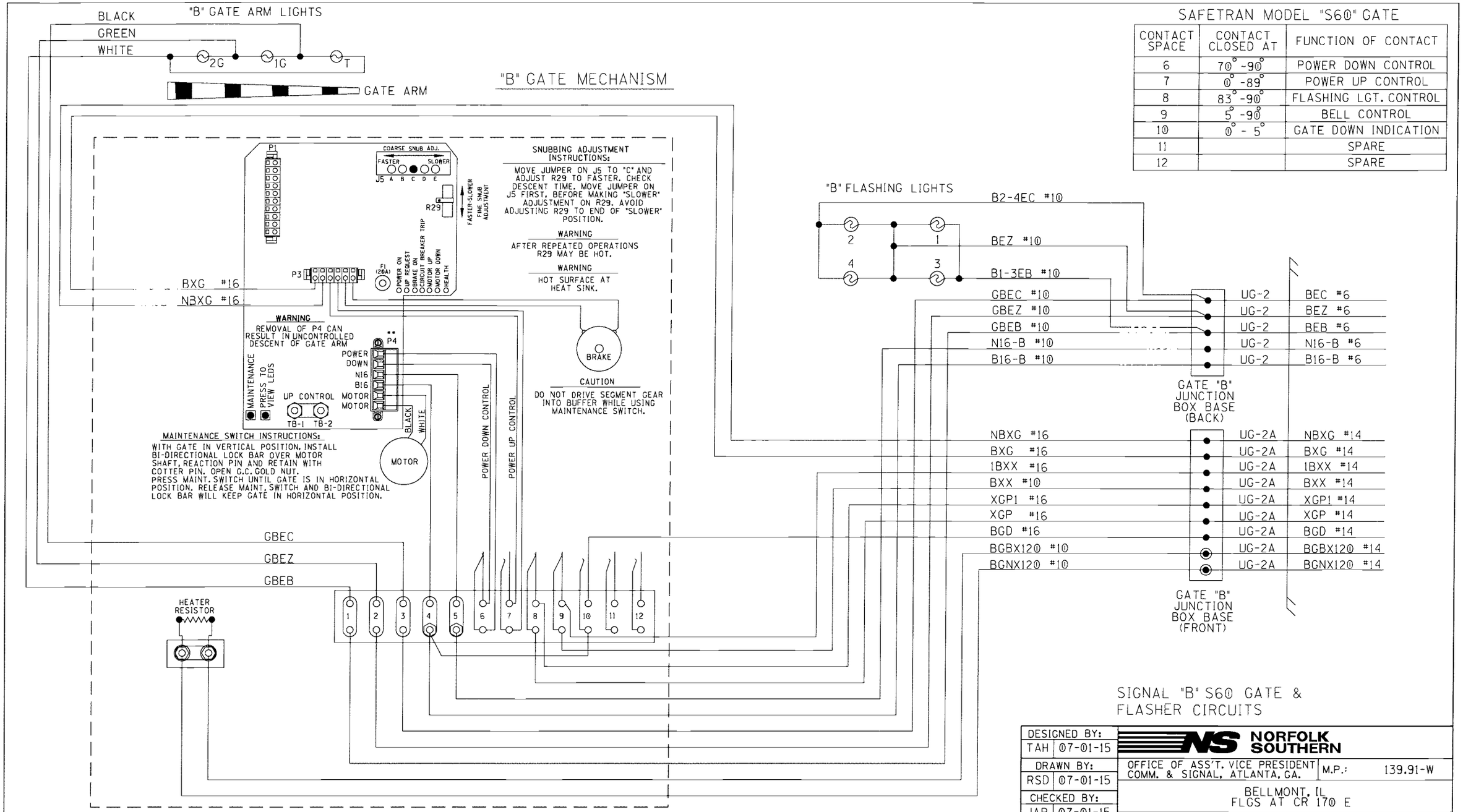

SAFETRAN MODEL "S60" GATE

CONTACT SPACE	CONTACT CLOSED AT	FUNCTION OF CONTACT
6	70° -90°	POWER DOWN CONTROL
7	0° -89°	POWER UP CONTROL
8	83° -90°	FLASHING LGT. CONTROL
9	5° -90°	BELL CONTROL
10	0° - 5°	GATE DOWN INDICATION
11		SPARE
12		SPARE

SIGNAL "B" S60 GATE & FLASHER CIRCUITS

DESIGNED BY: TAH 07-01-15	NORFOLK SOUTHERN		
DRAWN BY: RSD 07-01-15	OFFICE OF ASS'T. VICE PRESIDENT COMM. & SIGNAL, ATLANTA, GA.	M.P.:	139.91-W
CHECKED BY: JAR 07-01-15	BELLMONT, IL FLGS AT CR 170 E		
IN SERVICE: - -	SOUTHERN WEST	FILE No.	R-
	CADD or DWG. No. SE9947P.20	SHEET No.	20 of 27

REVISION INITIALS

PROPERTY
NORFOLK SOUTHERN RAILWAY CO.

LEFT TWO ROWS TERMINAL BOARD 1

"1A" "1B"

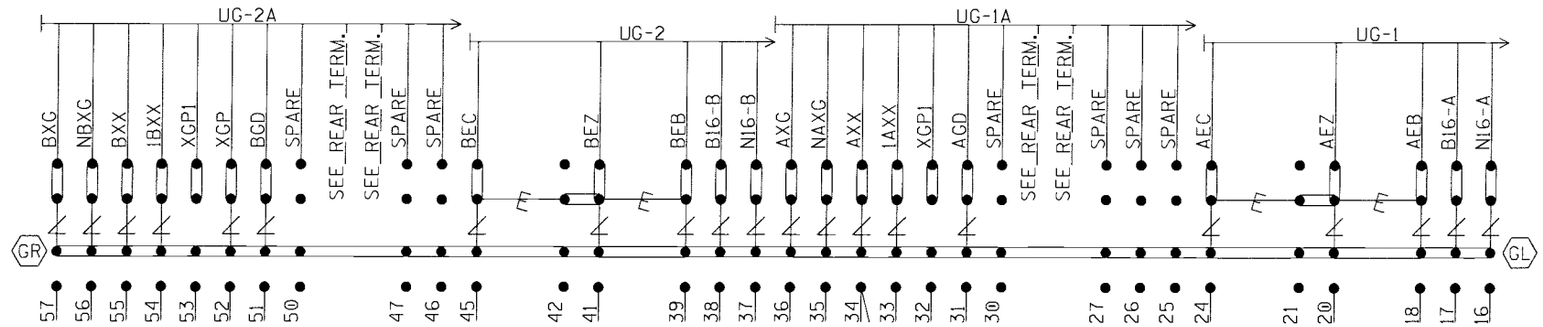

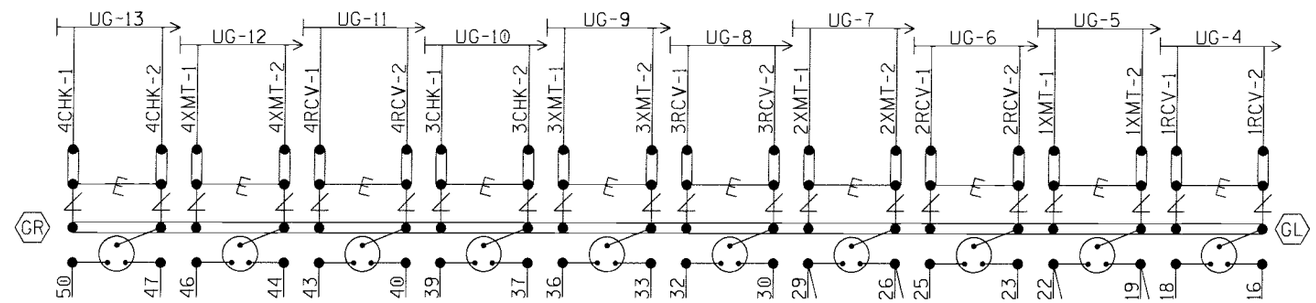

NOTE: INSTALL TEST LINKS ON ALL TRACK WIRES AND ON ALL LOW VOLTAGE UNDERGROUND CABLE TERMINATIONS.

= Heavy Duty Equalizer (022700-1X)

= Clearview Lightning Arrester (022585-1X)

= LPC-10560-51

SEE FARADAY SHIELD DETAILS - 1A & 1B FOR HOW THIS PORTION OF THE FARADAY SHIELD IS PREDRILLED. ONLY INSTALL AND USE THE TERMINALS NEEDED.

GR / GL = TERMINALS GROUNDED TO SHIELD. 4 POST BLOCKS USE EITHER - GR - SERMMI PART NO. 61278 GL - SERMMI PART NO. 61278-1.

BACKBOARD 1A & 1B

DESIGNED BY: TAH 07-01-15	NORFOLK SOUTHERN		
DRAWN BY: RSD 07-01-15	OFFICE OF ASS'T. VICE PRESIDENT COMM. & SIGNAL, ATLANTA, GA.	M.P.:	139.91-W
CHECKED BY: JAR 07-01-15	BELLMONT, IL FLGS AT CR 170 E		
IN SERVICE: - -	SOUTHERN WEST	FILE No.	R-
	CADD or DWG. No. SE9947P.21	SHEET No.	21 of 27

REVISION INITIALS											

PROPERTY
NORFOLK SOUTHERN RAILWAY CO.

REAR VIEW OF LEFT TWO ROWS TERMINAL BOARD 1
"1A"
"1B"

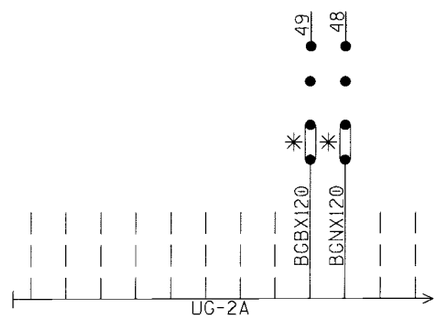

(SEE PREVIOUS SHEET FOR OTHER WIRES IN CABLE)

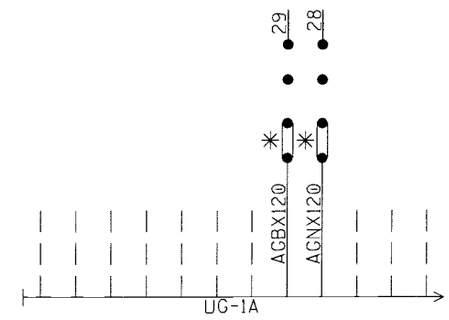

(SEE PREVIOUS SHEET FOR OTHER WIRES IN CABLE)

NOTE: ALL 120VAC AND ABOVE WILL BE WIRED TO THE REAR OF FARADAY BACKBOARD. INSULATED NUTS MUST BE USED ON ALL TERMINALS.

✳ = CLOSED DURING WINTER MONTHS

REAR BACKBOARD 1A & 1B

DESIGNED BY: TAH 07-01-15	NORFOLK SOUTHERN		
DRAWN BY: RSD 07-01-15	OFFICE OF ASS'T. VICE PRESIDENT COMM. & SIGNAL, ATLANTA, GA.	M.P.:	139.91-W
CHECKED BY: JAR 07-01-15	BELLMONT, IL FLGS AT CR 170 E		
IN SERVICE: - -	SOUTHERN WEST	FILE No. R-	
	CADD or DWG. No. SE9947P.22	SHEET No. 22	of 27

REVISION INITIALS											

PROPERTY
NORFOLK SOUTHERN RAILWAY CO.

NOTE: IF THE FARADAY SHIELD WOULD EVER NEED TO BE DRILLED IN THE FIELD, PROPER PRECAUTIONS MUST BE TAKEN TO INSURE METAL SHAVINGS DO NOT GET INTO EXISTING TERMINALS/WIRES.

AREA BELOW IS SCALED WITH AS=.75

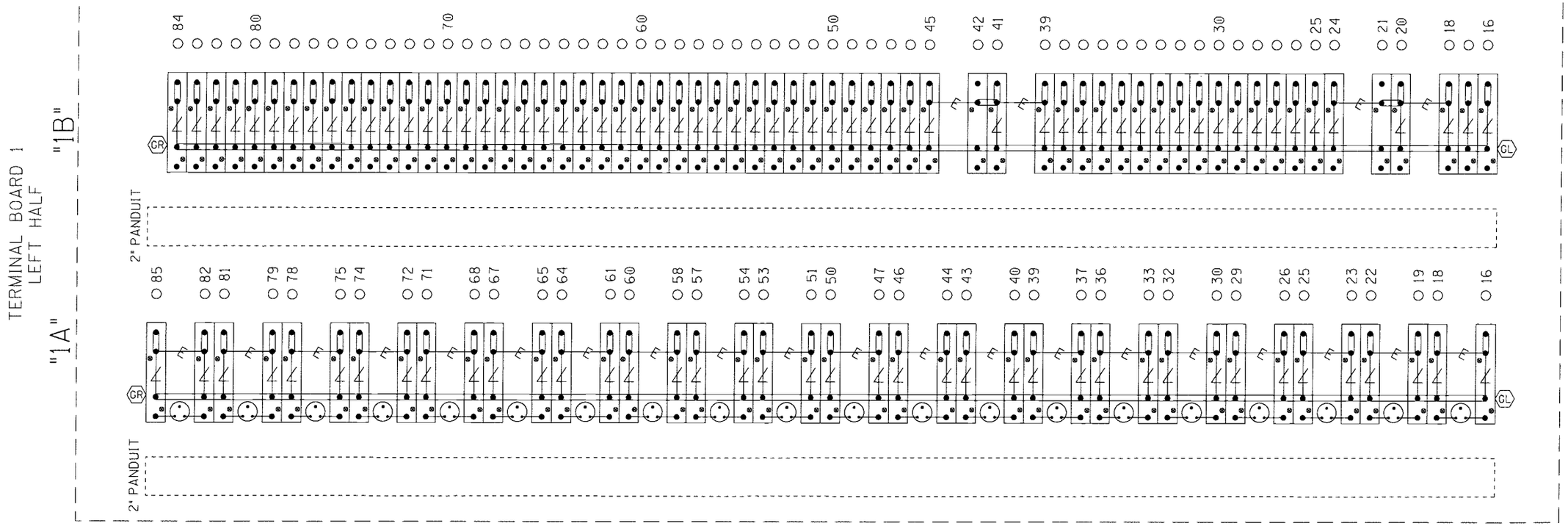

= Heavy Duty Equalizer (022700-1X)

= Clearview Lightning Arrester (022585-1X)

= LPC-10560-51

FARADAY SHIELD 1A & 1B

= INDICATES PLACEMENT OF PANDUIT

THIS SHEET IS FOR REFERENCE ONLY, TO REFLECT HOW THE FARADAY SHIELD IS PREDRILLED. ONLY INSTALL AND USE THE TERMINALS NEEDED.

GR / GL = TERMINALS GROUNDED TO SHIELD. 4 POST BLOCKS USE EITHER - GR - SERMMI PART NO. 61278 GL - SERMMI PART NO. 61278-1.

DESIGNED BY: TAH 07-01-15	NORFOLK SOUTHERN		
DRAWN BY: RSD 07-01-15	OFFICE OF ASS'T. VICE PRESIDENT COMM. & SIGNAL, ATLANTA, GA.	M.P.:	139.91-W
CHECKED BY: JAR 07-01-15	BELLMONT, IL FLGS AT CR 170 E		
IN SERVICE: - -	SOUTHERN WEST	FILE No.	R-
	CADD or DWG. No. SE9947P.23	SHEET No.	23 of 27

REVISION INITIALS

PROPERTY NORFOLK SOUTHERN RAILWAY CO.

NOTE: IF THE FARADAY SHIELD WOULD EVER NEED TO BE DRILLED IN THE FIELD, PROPER PRECAUTIONS MUST BE TAKEN TO INSURE METAL SHAVINGS DO NOT GET INTO EXISTING TERMINALS/WIRES.

AREA BELOW IS SCALED WITH AS=.75

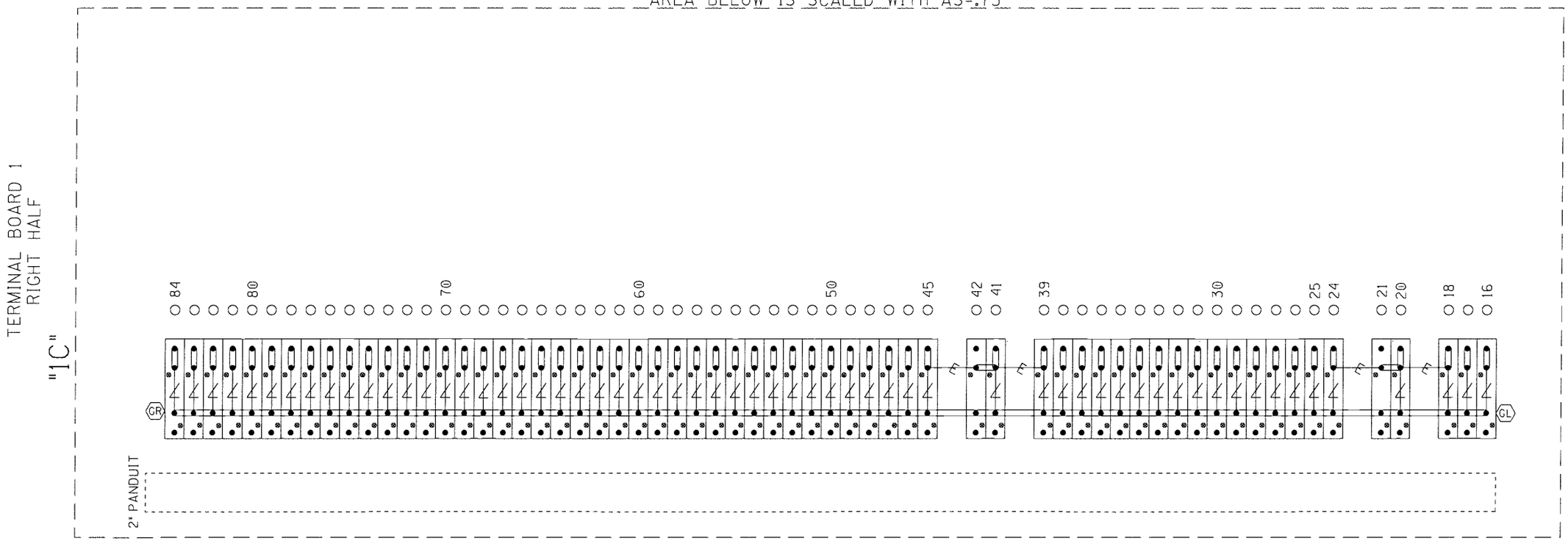

= Heavy Duty Equalizer (022700-1X)

Clearview = Lightning Arrester (022585-1X)

= LPC-10560-51

FARADAY SHIELD 1C

= INDICATES PLACEMENT OF PANDUIT

THIS SHEET IS FOR REFERENCE ONLY, TO REFLECT HOW THE FARADAY SHIELD IS PREDRILLED. ONLY INSTALL AND USE THE TERMINALS NEEDED.

GR / GL = TERMINALS GROUNDED TO SHIELD. 4 POST BLOCKS USE EITHER - GR - SERMMI PART NO. 61278 GL - SERMMI PART NO. 61278-1.

DESIGNED BY: TAH 07-01-15	NORFOLK SOUTHERN		
DRAWN BY: RSD 07-01-15	OFFICE OF ASS'T. VICE PRESIDENT COMM. & SIGNAL, ATLANTA, GA.	M.P.:	139.91-W
CHECKED BY: JAR 07-01-15	BELLMONT, IL FLGS AT CR 170 E		
IN SERVICE: - -	SOUTHERN WEST	FILE No.	R-
	CADD or DWG. No. SE9947P.24	SHEET No.	24 of 27

REVISION INITIALS											

PROPERTY
NORFOLK SOUTHERN RAILWAY CO.

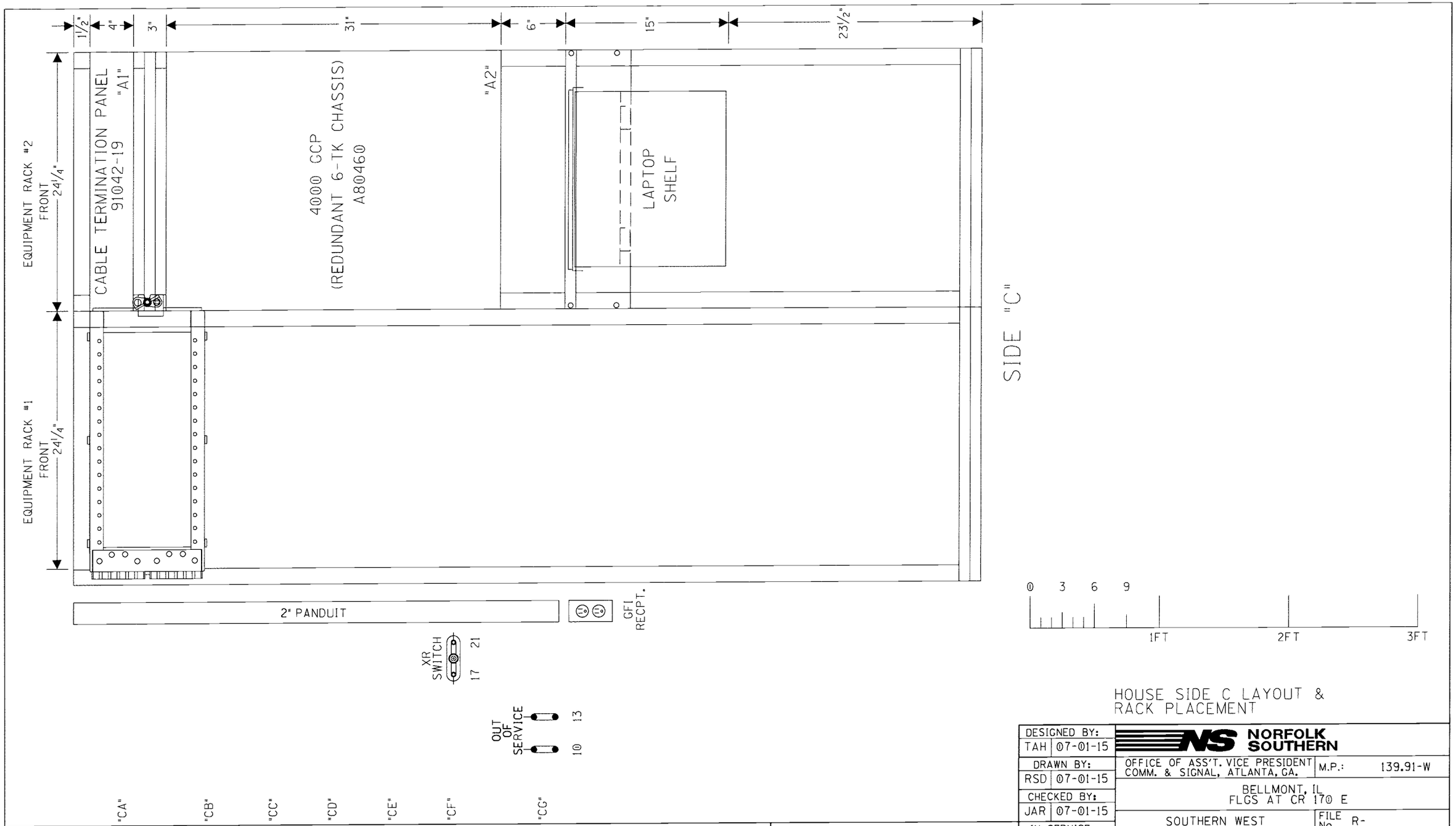

HOUSE SIDE C LAYOUT &
RACK PLACEMENT

DESIGNED BY: TAH 07-01-15	NORFOLK SOUTHERN		
DRAWN BY: RSD 07-01-15	OFFICE OF ASS'T. VICE PRESIDENT COMM. & SIGNAL, ATLANTA, GA.	M.P.:	139.91-W
CHECKED BY: JAR 07-01-15	BELLMONT, IL FLGS AT CR 170 E		
IN SERVICE: - -	SOUTHERN WEST	FILE No.	R-
	CADD or DWG. No. SE9947P.25	SHEET No.	25 of 27

REVISION INITIALS	"CA"	"CB"	"CC"	"CD"	"CE"	"CF"	"CG"			

PROPERTY
NORFOLK SOUTHERN RAILWAY CO.

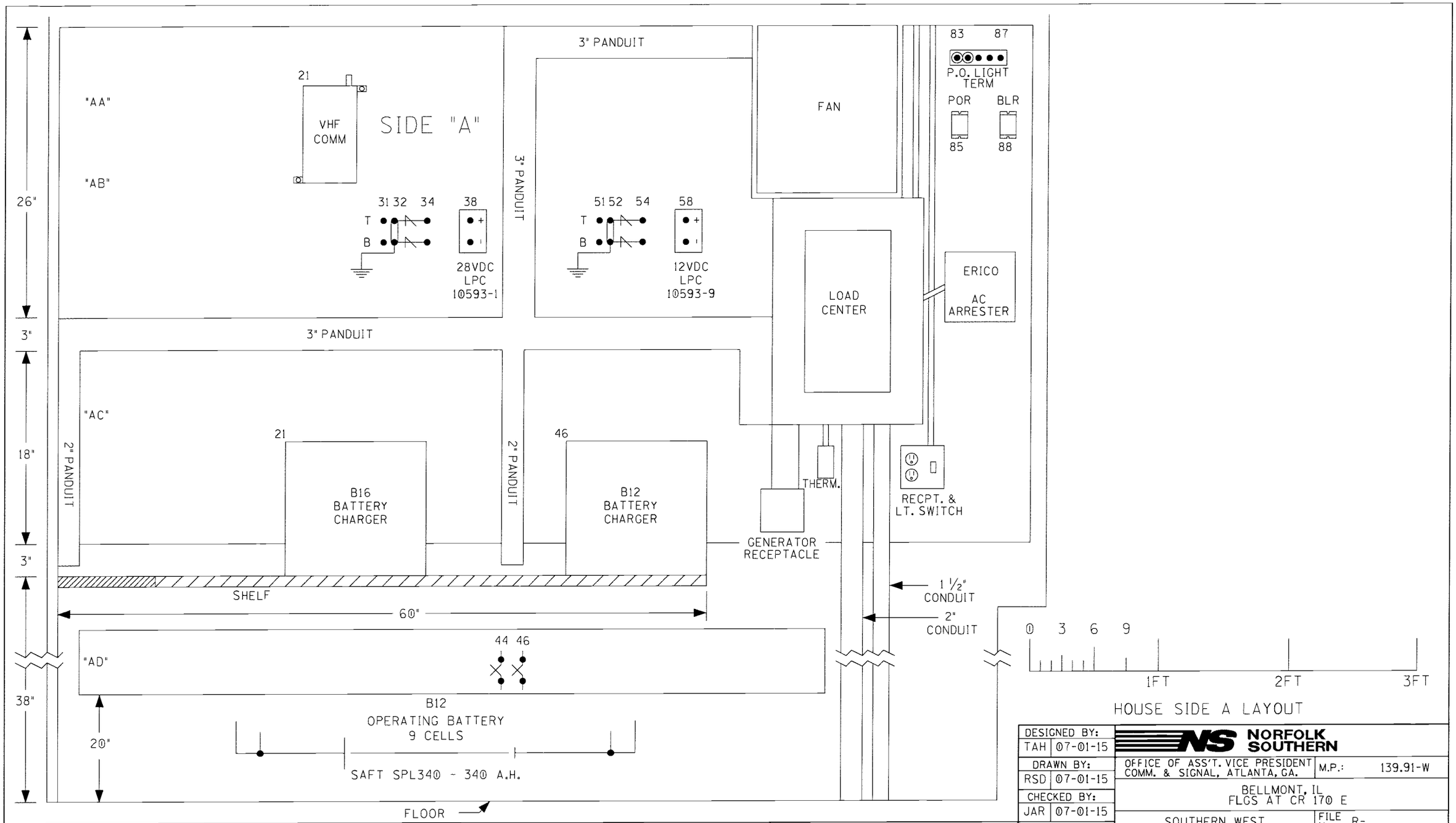

HOUSE SIDE A LAYOUT

DESIGNED BY: TAH 07-01-15	NORFOLK SOUTHERN		
DRAWN BY: RSD 07-01-15	OFFICE OF ASS'T. VICE PRESIDENT COMM. & SIGNAL, ATLANTA, GA.	M.P.:	139.91-W
CHECKED BY: JAR 07-01-15	BELLMONT, IL FLGS AT CR 170 E		
IN SERVICE: - -	SOUTHERN WEST	FILE No.	R-
	CADD or DWG. No. SE9947P.26	SHEET No.	26 of 27

REVISION INITIALS

PROPERTY
NORFOLK SOUTHERN RAILWAY CO.

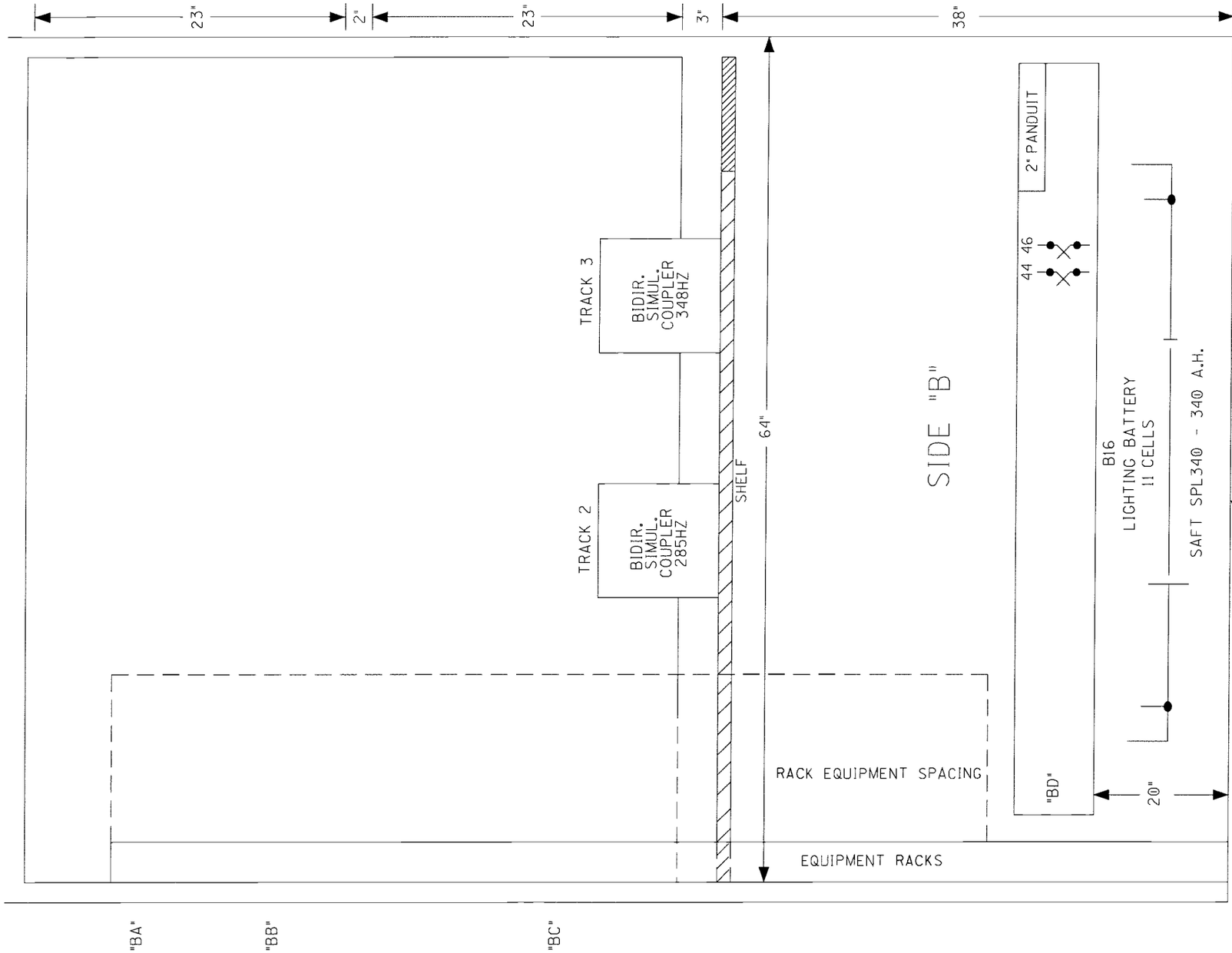

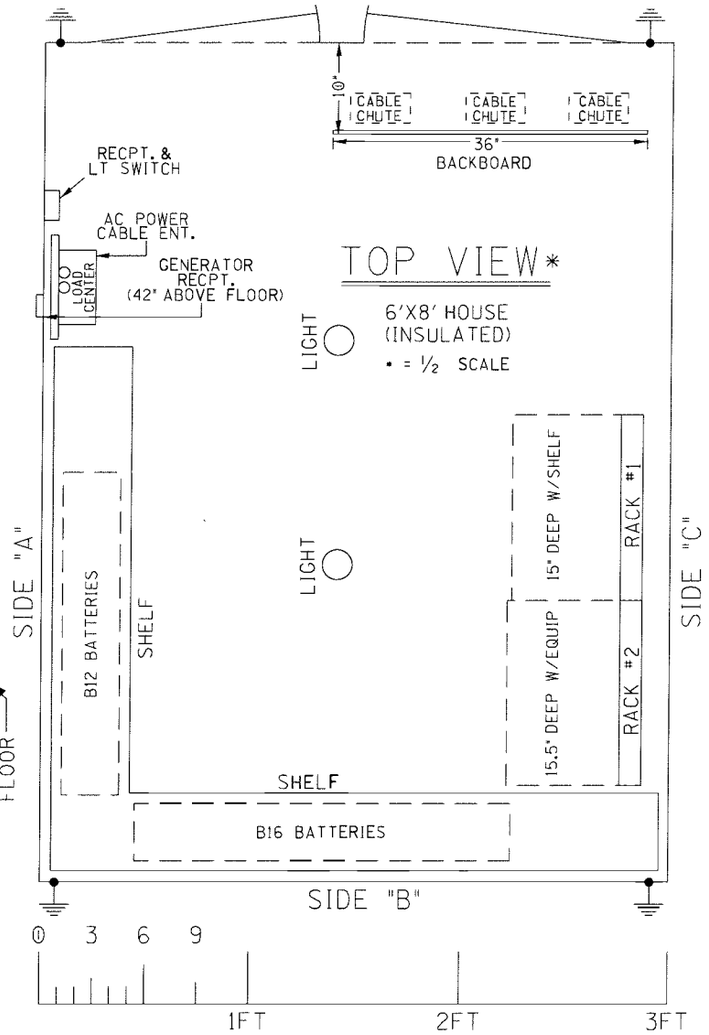

HOUSE SIDE B LAYOUT & TOP VIEW

DESIGNED BY: TAH 07-01-15	NORFOLK SOUTHERN		
DRAWN BY: RSD 07-01-15	OFFICE OF ASS'T. VICE PRESIDENT COMM. & SIGNAL, ATLANTA, GA.	M.P.:	139.91-W
CHECKED BY: JAR 07-01-15	BELLMONT, IL FLGS AT CR 170 E		
IN SERVICE: - -	SOUTHERN WEST	FILE No. R-	
	CADD or DWG. No. SE9947P.27	SHEET No. 27	of 27

REVISION INITIALS										

PROPERTY
NORFOLK SOUTHERN RAILWAY CO.