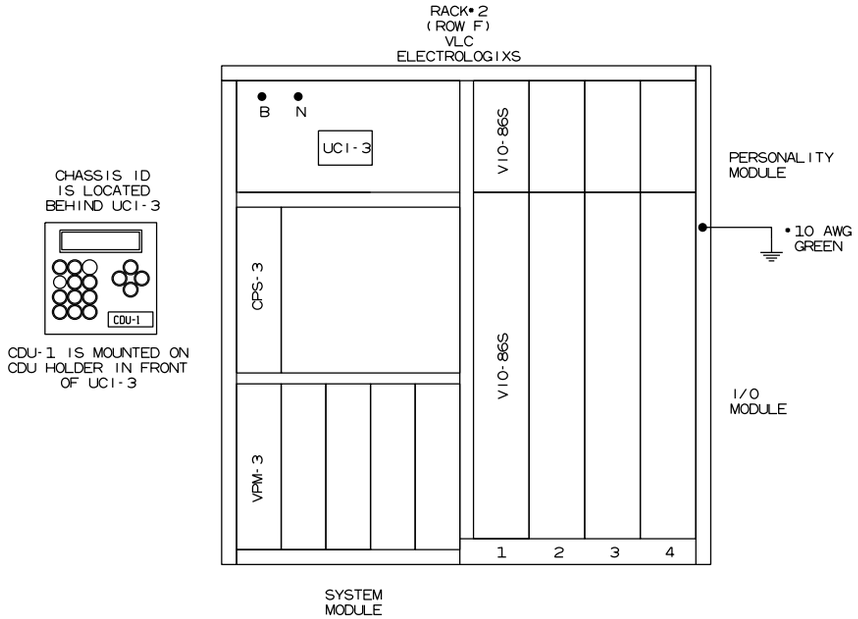

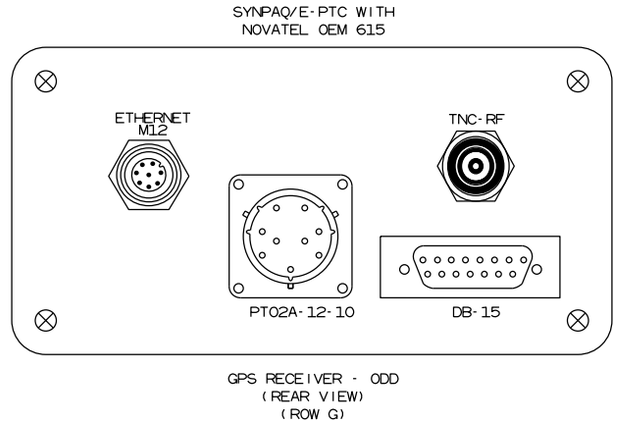

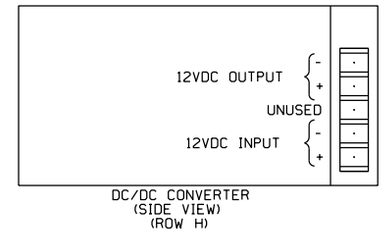

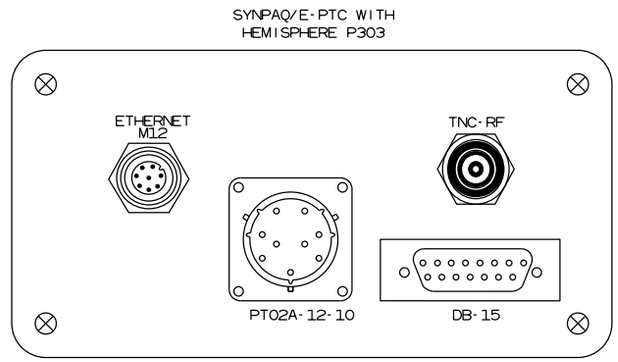

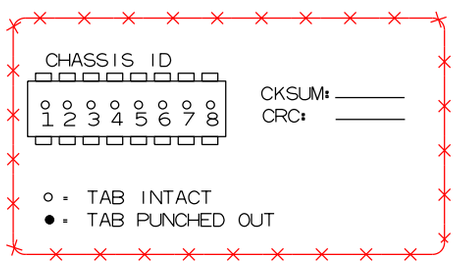

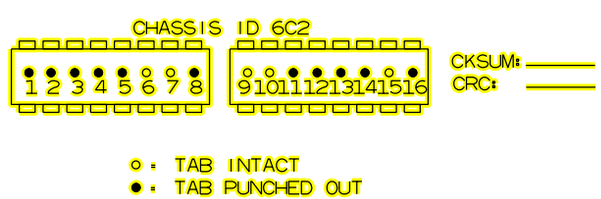

= IN
= OUT

NEW SHEET

						Designed: 2/25/15 TIER 3 PHASE 3 M.P.177.00 TO M.P.160.00 HSR SCOPE CHANGE Rec#: WO#:22820 IS: MWK/ /NST/JVJ	Designed: 08/21/12 TIER 3 PHASE 3 M.P.177.00 TO M.P.160.00 UPGRADE XINGS AND CP'S FOR HIGH SPEED RAIL Rec#: WO#:22820 IS: /MWK /NST/MJF	CIRCUIT MODIFICATIONS ARE NOT TO BE MADE WITHOUT AUTHORITY FROM THE OFFICE OF SIGNAL DESIGN	Date: 08/21/12 Des: NST Chk: MWK AFE: 22820	UNION PACIFIC RAILROAD WILLIAMSVILLE, ILLINOIS MAIN STREET SPRINGFIELD SUBDIVISION Office of AVP Engineering - Signal Omaha, Nebraska	Sh.: 14C DOT 294275U MP: 173.02 ID: CSL17302.14CX

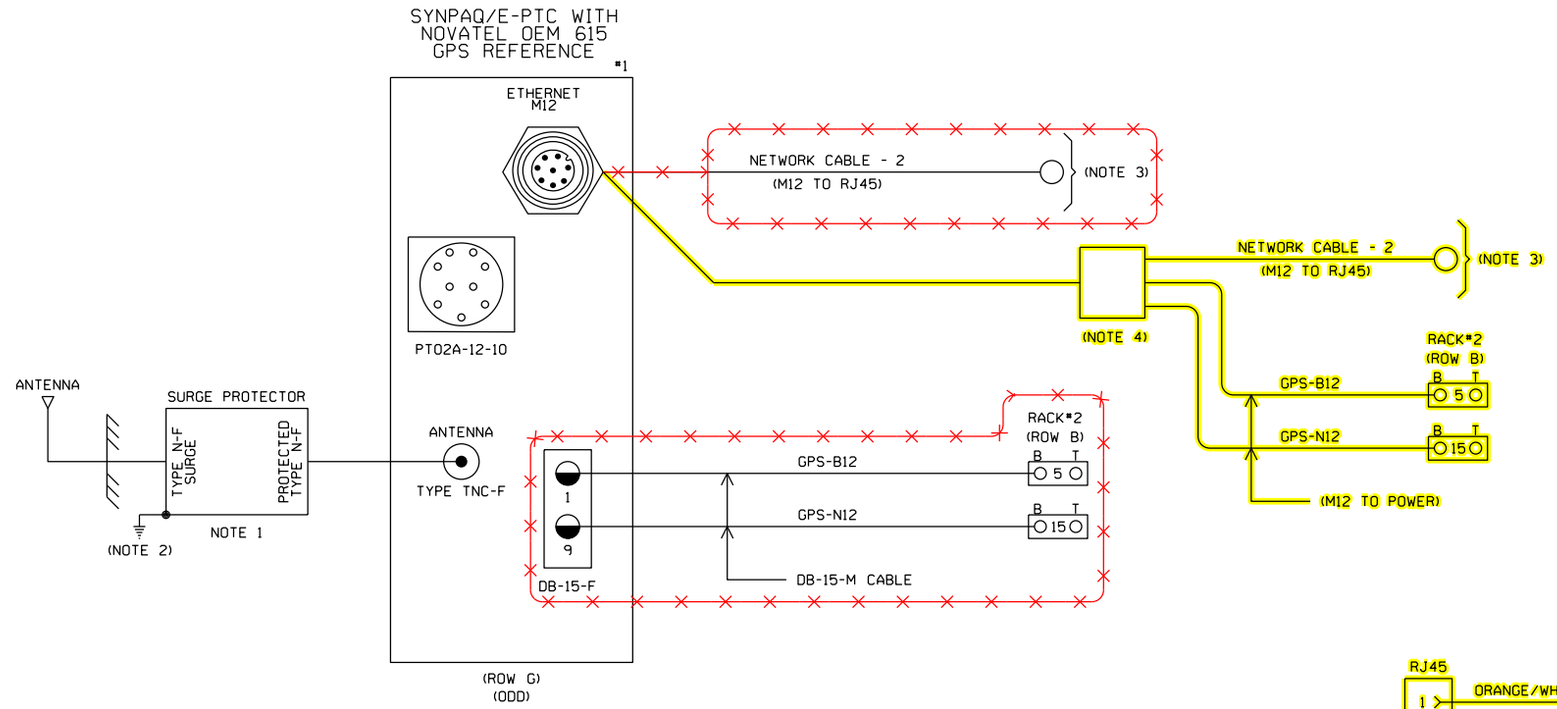

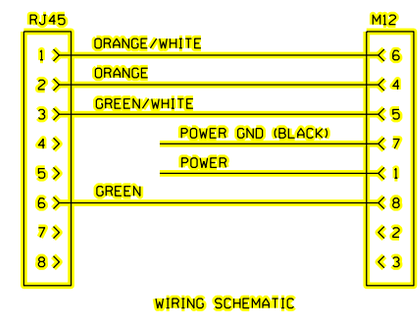

WIRING SCHEMATIC

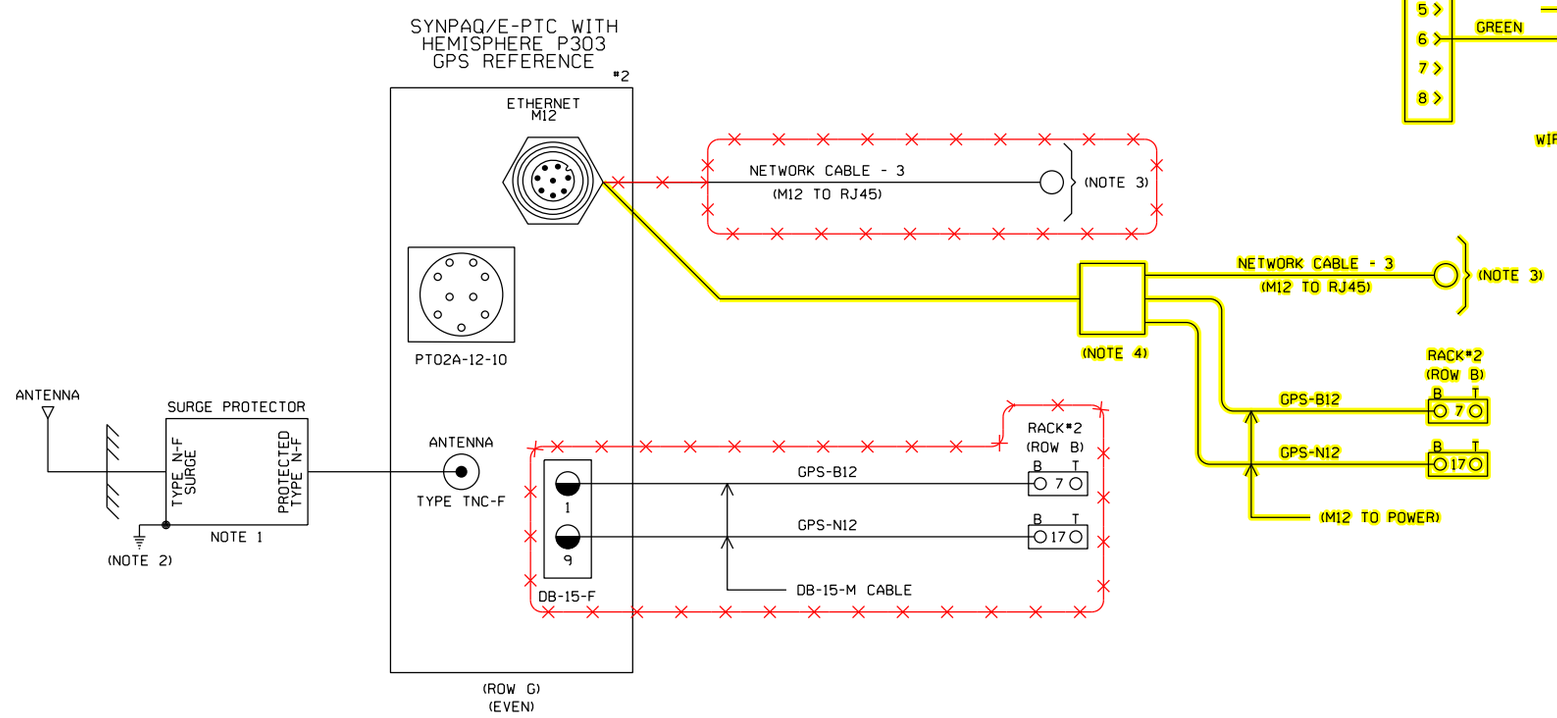

= IN
= OUT

NOTES:

1. ANTENNA SURGE PROTECTOR TO BE INSTALLED "AS CLOSE TO THE HOUSE ENTRANCE AS POSSIBLE".
2. CONNECT TO HOUSE GROUND PLATE WITH #10 AWG (GREEN).
3. TO NETWORK SWITCH (SUPPLIED BY RR)
4. GETSPN 1010749-901 M12 TO RJ45/POWER CABLE.

NEW SHEET

						Designed: 2/25/15 TIER 3 PHASE 3 M.P.177.00 TO M.P.160.00 HSR SCOPE CHANGE Rec#: IS: WO#:22820 / NST/JVJ	Designed: 08/21/12 TIER 3 PHASE 3 M.P.177.00 TO M.P.160.00 UPGRADE XINGS AND CP'S FOR HIGH SPEED RAIL Rec#: IS: WO#:22820 / MWK / NST/MJF	CIRCUIT MODIFICATIONS ARE NOT TO BE MADE WITHOUT AUTHORITY FROM THE OFFICE OF SIGNAL DESIGN	Date: 08/21/12 Des: NST Chk: MWK AFE: 22820	UNION PACIFIC RAILROAD WILLIAMSVILLE, ILLINOIS MAIN STREET SPRINGFIELD SUBDIVISION Office of AVP Engineering - Signal Omaha, Nebraska	Sh.: 14D DOT 294275U MP: 173.02 ID: CSL17302.14DX

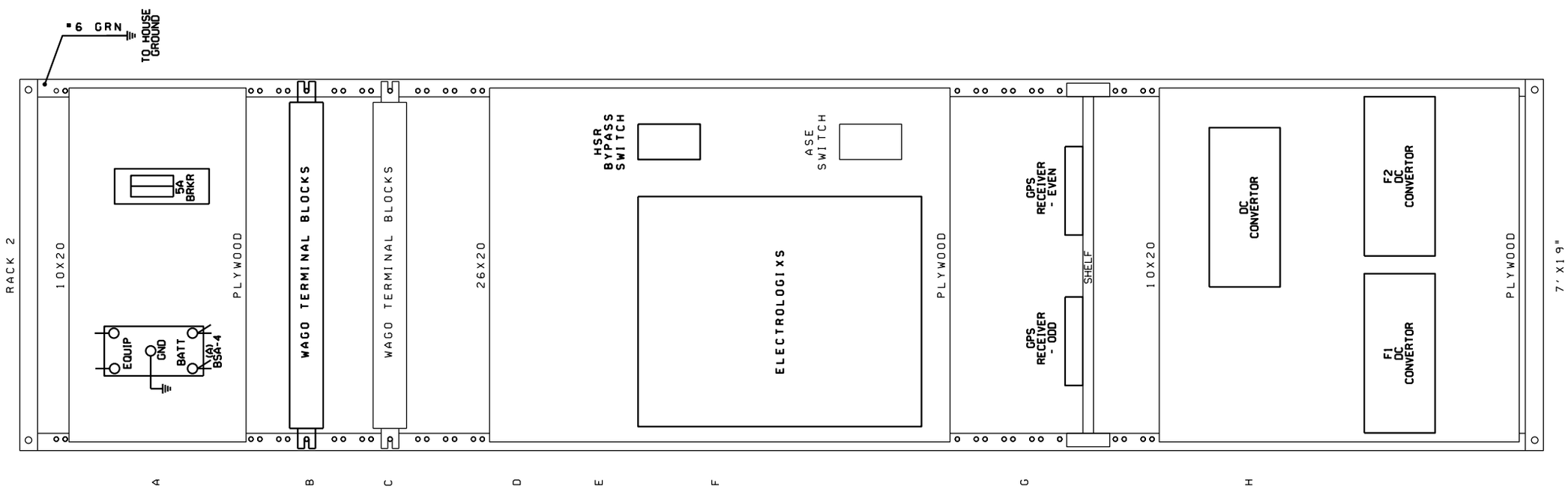

——— = IN

REDRAWN

							Designed: 08/21/12 TIER 3 PHASE 3 M.P.177.00 TO M.P.160.00 UPGRADE XINGS AND CP'S FOR HIGH SPEED RAIL Rec#: WO#:22820 IS: /MWK /NST/MJF	CIRCUIT MODIFICATIONS ARE NOT TO BE MADE WITHOUT AUTHORITY FROM THE OFFICE OF SIGNAL DESIGN	Date: 08/21/12 Des: NST Chk: MWK AFE: 22820	UNION PACIFIC RAILROAD WILLIAMSVILLE, ILLINOIS MAIN STREET SPRINGFIELD SUBDIVISION Office of AVP Engineering - Signal Omaha, Nebraska	Sh.: 14E DOT 294275U MP: 173.02 ID: CSL17302.14EX

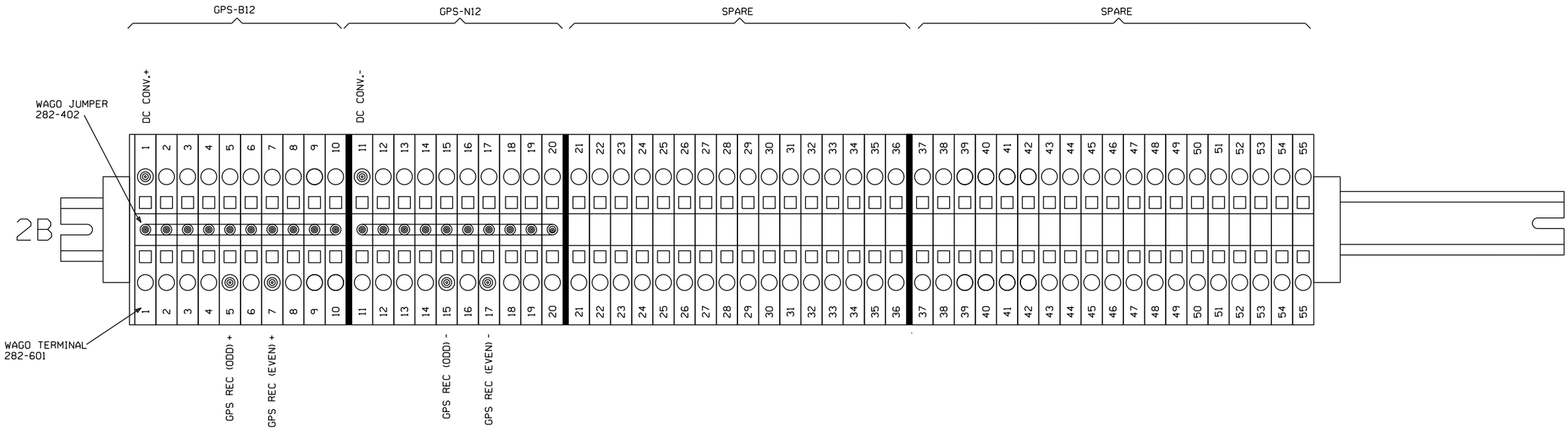

REUSED AND REDRAWN FROM VOIDED SHT. 9F

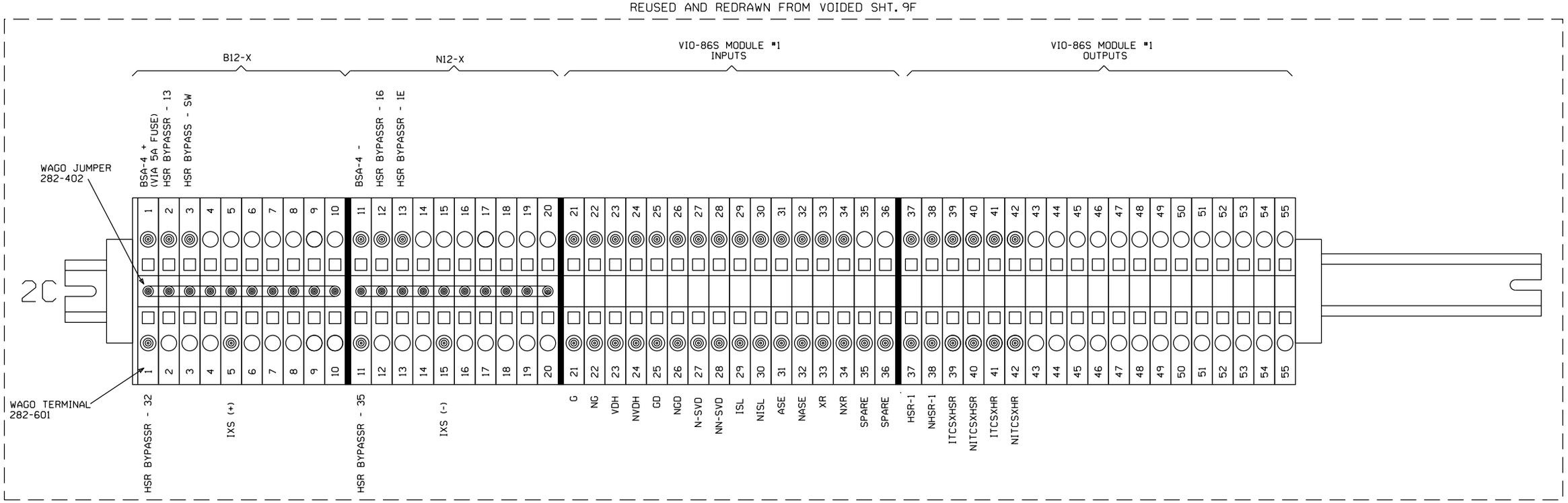

NEW SHEET

						Designed: 08/21/12 TIER 3 PHASE 3 M.P.177.00 TO M.P.160.00 UPGRADE XINGS AND CP'S FOR HIGH SPEED RAIL Rec#: IS: WO#:22820 /MWK /NST/MJF	CIRCUIT MODIFICATIONS ARE NOT TO BE MADE WITHOUT AUTHORITY FROM THE OFFICE OF SIGNAL DESIGN	Date: 08/21/12 Des: NST Chk: MWK AFE: 22820	UNION PACIFIC RAILROAD WILLIAMSVILLE, ILLINOIS MAIN STREET SPRINGFIELD SUBDIVISION Office of AVP Engineering - Signal Omaha, Nebraska	Sh.: 14F DOT 294275U MP: 173.02 ID: CSL17302.14FX

EGMS
PROGRAM INFORMATION

PROGRAM VERSION ~~4.3~~ 4.4

EGMS DISPLAY PARAMETERS

PARAMETER	
STARTUP LOGO	UPRR
BACKLIGHT TIMEOUT	015
BUZZER ENABLE	YES
DIRECTION INDICATORS	↓E ↑W
BUNGALOW QUAD	NB EXIT
DISPLAY QZI	NO
LOCAL PREFIX	'R'
REMOTE PREFIX	'T'
CROSSING NAME	MAIN ST.
CROSSING DESCRIPTION	4 QUAD PUB AT GRADE
CROSSING DOT #	294275U

EGMS ALARM PARAMETERS

PARAMETER	
GATO ALARM DELAY	000
GATO GATE DELAY	000
MAX GATE RELEASE	09.0 •
MAX GATE RESPONSE	03.0 •
CYCLE RESTORE	001
MTCD PRESENCE	000
DET FAIL ALARM	YES
DET RESTORE DELAY	000
MAX DET FAILS	000
AUX IN 1 ENABLE	NO
AUX IN 1 RESTORE	000
AUX IN 2 ENABLE	NO
AUX IN 2 RESTORE	000
AUX IN 3 ENABLE	NO
AUX IN 3 RESTORE	000
AUX IN 4 ENABLE	NO
AUX IN 4 RESTORE	000

• ADJUST GATE RELEASE, AND RESPONSE TIMES IN FIELD BASED ON ACTUAL GATE OPERATIONS, AS NECESSARY.

EGMS OPERATIONAL PARAMETERS

PARAMETER	
PRIMARY MODE	DYNAMIC
SECONDARY MODE	NONE
DIS ENTR DETS	NO
DELAY ON DOWN	01.0
REV DET ENABLE	NO
DYNAMIC EGCT	000
TIMED EGCT	012
ISLAND INHIBIT TIME	015
XR DET DISABLE	YES
BIDIR DELAY	04.0
DYN ENTRANCE MONITOR	YES
ENTRANCE DOWN REQ	YES
EXIT UP REQ	NO
EGH SENSE	B12 HOLDS
ISL 2 ENABLE	NO
DUAL EGMS ENABLED	NO

EGMS AUX OUTPUT MAPPING

PARAMETER	
AUX OUT 1 FUNCTION	DET XRISL
AUX OUT 1 SOURCE	BOTH
AUX OUT 2 FUNCTION	DET HLTH
AUX OUT 2 SOURCE	BOTH
AUX OUT 3 FUNCTION	GP
AUX OUT 3 SOURCE	BOTH
AUX OUT 4 FUNCTION	~~ALARM~~ DET OBSTL
AUX OUT 4 SOURCE	BOTH

GATE PARAMETERS

GATE	1(A)	2(B)	3(C)	4(D)	5(E)	6(F)	7(G)	8(H)
GATE TYPE	ENTRANCE	ENTRANCE	EXIT	EXIT	NONE•	NONE•	NONE•	NONE•
GATE DIRECTION	↓E	↑W	↓E	↑W	↓S	↓S	↓S	↓S
VERTICAL CHATTER TIME	01.0	01.0	01.0	01.0	02.0	02.0	02.0	02.0
HORIZONTAL CHATTER TIME	01.0	01.0	01.0	01.0	02.0	02.0	02.0	02.0
MINIMUM ASCENT TIME	003	003	003	003	003	003	003	003
MAXIMUM ASCENT TIME	015	015	015	015	015	015	015	015
MINIMUM DESCENT TIME	003	003	003	003	003	003	003	003
MAXIMUM DESCENT TIME	015	015	015	015	015	015	015	015

• GATE TYPE = "NONE" ALL OTHER PARAMETERS IGNORED

DETECTOR PARAMETERS

	(1) E-1400				(2) E-1400				(3) E-1400				(4) E-1400			
DETECTOR	1	2	3	4	5	6	7	8	9	10	11	12	13	14	15	16
DETECTOR TYPE	ENTR	ENTR	EXIT	EXIT	NONE	NONE	NONE	NONE	NONE	NONE	NONE	NONE	NONE	NONE	NONE	NONE
DETECTOR DIRECTION	↓E	↑W	↓E	↑W	↓S	↑N	↓S	↓S	↓S	↓S	↓S	↓S	↓S	↓S	↓S	↓S
STRETCH TIME•	01.0	01.0	01.0	01.0	01.0	01.0	01.0	01.0	01.0	01.0	01.0	01.0	01.0	01.0	01.0	01.0
LONG-TERM OBSTRUCTION	001	001	001	001	000	000	000	000	000	000	000	000	000	000	000	000
DISABLE ON DOWN	NO	NO	NO	NO	NO	NO	NO	NO	NO	NO	NO	NO	NO	NO	NO	NO
AUX OUTPUT 1	YES	YES	YES	YES	YES	YES	YES	YES	YES	YES	YES	YES	YES	YES	YES	YES
AUX OUTPUT 2	YES	YES	YES	YES	YES	YES	YES	YES	YES	YES	YES	YES	YES	YES	YES	YES
AUX OUTPUT 3	YES	YES	YES	YES	YES	YES	YES	YES	YES	YES	YES	YES	YES	YES	YES	YES
AUX OUTPUT 4	YES	YES	YES	YES	YES	YES	YES	YES	YES	YES	YES	YES	YES	YES	YES	YES

• INCREASE STRETCH TIME AS NECESSARY TO MAINTAIN VEHICLE DETECTION FROM LOOP TO LOOP.
•• DETECTORS 5 - 16 DEFAULT TO "NONE" AND MUST BE CONFIGURED MANUALLY
DETECTORS 5 & 6 DEFAULT TO "INT" WHEN 2TK DEFAULT CONFIGURATION IS SELECTED.
WHEN DETECTOR TYPE IS "NONE", ALL OTHER PARAMETERS IGNORED.

= IN
~~= OUT~~

~~NEW SHEET~~

Designed: 2/25/15
TIER 3 PHASE 3
M.P.177.00 TO
M.P.160.00
HSR SCOPE CHANGE
Rec*: WO*:22820
IS: MWK/
/ /NST/JVJ

Designed: 08/21/12
TIER 3 PHASE 3
M.P.177.00 TO
M.P.160.00
UPGRADE XINGS AND
CP'S FOR HIGH
SPEED RAIL
Rec*: WO*:22820
IS: MWK/
/ /NST/MJF

MODIFICATION LEVEL	
O.A. LAST LEVEL CHECKED	DU
LAST LEVEL MOD THIS TYPICAL	DU
LAST LEVEL BY DESIGNER	DU
CHANGED FROM TYPICAL?	Y

REV 01.24.11 4K 2TKEGMS.8

CIRCUIT MODIFICATIONS ARE NOT TO BE MADE WITHOUT AUTHORITY FROM THE OFFICE OF SIGNAL DESIGN

Date: 08/21/12
Des: NST
Chk: MWK
AFE: 22820

UNION PACIFIC RAILROAD
WILLIAMSVILLE, ILLINOIS
MAIN STREET
SPRINGFIELD SUBDIVISION
Office of AVP Engineering - Signal Omaha, Nebraska

Sh.: 15
DOT 294275U
MP: 173.02
ID: CSL17302.15X

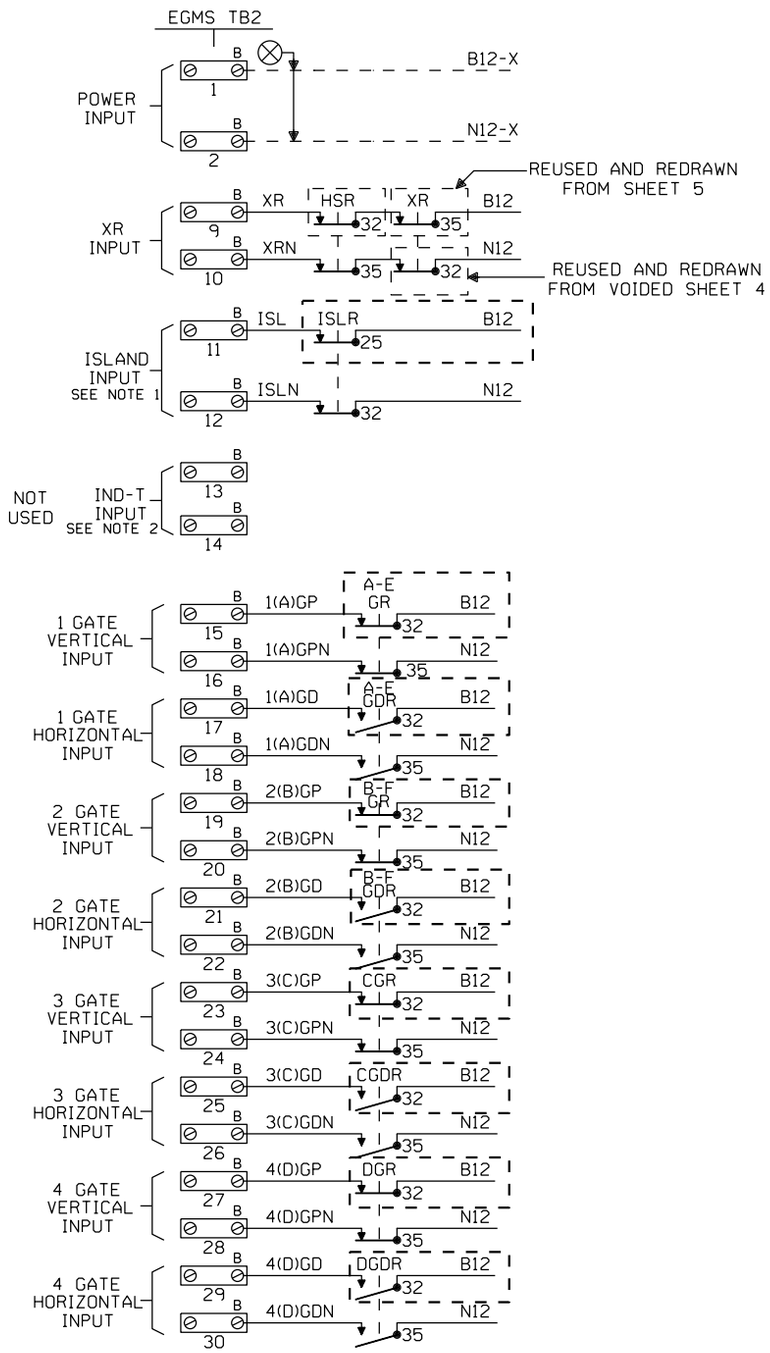

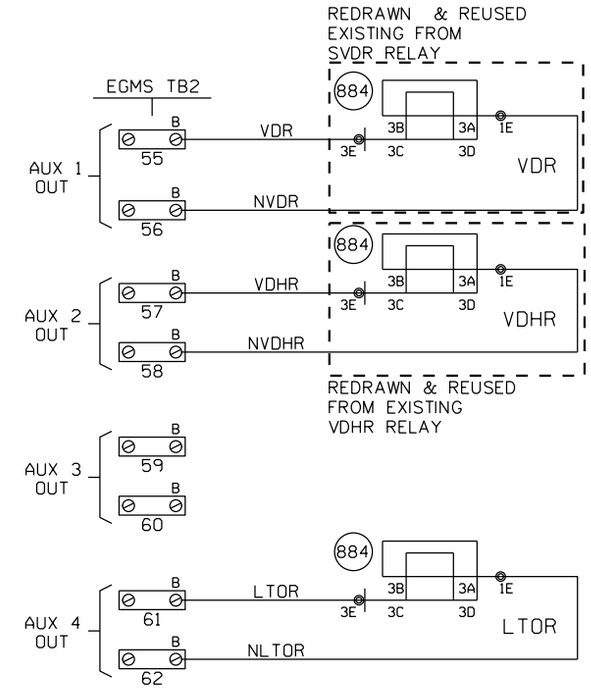

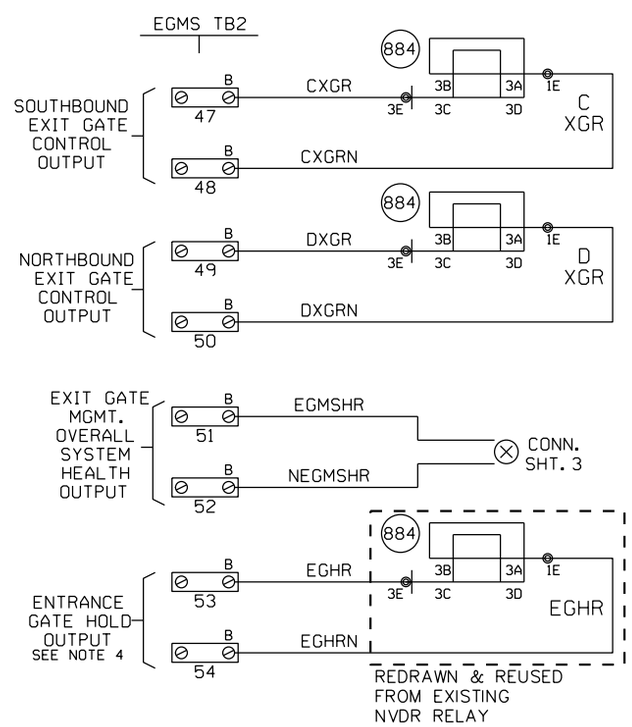

NOTES

1. EGMS ISL1 INPUT: "AND" ISLAND INPUTS FROM ALL TRACKS. NOTE THAT WHEN THIS INPUT IS DE-ENERGIZED THE XR INPUT ON TB2, 9 & 10 MUST ALSO BE DE-ENERGIZED BEFORE THE EXIT GATES MAY BE DRIVEN DOWN.
2. EGMS ISL2 INPUT: MAY BE USED FOR STAND ALONE ISLAND INPUT. THIS INPUT IS NOT DEPENDENT UPON THE STATUS OF XR INPUT ON TB2, 9 & 10. THIS INPUT MUST BE FIELD SELECTED AND ENABLED DURING EGMS SETUP.
3. ALL WIRING TO EGMS TO BE #16 AWG FLEX.
4. ENTRANCE GATE HOLD (EGH) CAN BE PROGRAMMED AS A NORMALLY ENERGIZED OR NORMALLY DE-ENERGIZED OUTPUT.

– – – = REDRAWN & REUSED FROM SHEET 2

NEW SHEET

Designed: 08/21/12
TIER 3 PHASE 3
M.P.177.00 TO M.P.160.00
UPGRADE XINGS AND CP'S FOR HIGH SPEED RAIL
Rec#: WO#:22820
IS: MWK/ / /NST/MJF

MODIFICATION LEVEL	
O.A. LAST LEVEL CHECKED	DU
LAST LEVEL MOD THIS TYPICAL	DU
LAST LEVEL BY DESIGNER	DU
CHANGED FROM TYPICAL?	Y
REV 01.24.11 4K 2TKEGMS.8A	

CIRCUIT MODIFICATIONS ARE NOT TO BE MADE WITHOUT AUTHORITY FROM THE OFFICE OF SIGNAL DESIGN

Date: 08/21/12
Des: NST
Chk: MWK
AFE: 22820

UNION PACIFIC RAILROAD
WILLIAMSVILLE, ILLINOIS
MAIN STREET
SPRINGFIELD SUBDIVISION
Office of AVP Engineering - Signal Omaha, Nebraska

Sh.: 15A
DOT 294275U
MP: 173.02
ID: CSL17302.15AX

(1) E-1400 SETUP PARAMETERS

FUNCTION	CH. 1	CH. 2	CH. 3	CH. 4
FREQUENCY SETTING	2	4	6	8
SENSITIVIY SETTING	6*	6*	6*	6*
OPTION 1 (TEMP L DISPLAY)	OFF			
OPTION 2 (TEMP ΔL/L DISPLAY)	OFF			
OPTION 3 (NOISE FILTER)	3.00	3.00	3.00	3.00
OPTION 4 (TRACKING)	4.02	4.02	4.02	4.02
OPTION 5 (SENSITIVITY BOOST)	5.00	5.00	5.00	5.00
OPTION 6 (TEMP AUDIBLE SIGNAL)	OFF	OFF	OFF	OFF
CHECKLOOP INTERVAL	005	005	005	005
DETECTOR ID	000			
OPTION 7 (DETECTOR SYNC)	7.01			
OPTION 8 (ISL OPTION)	OFF			
OPTION 9 (SHUNT ENHANCEMENT SE)	OFF	OFF	OFF	OFF
MAIN VITAL OUTPUT DELAY	00.0	00.0	00.0	00.0
MAIN VITAL OUTPUT EXTENSION	00.0	00.0	00.0	00.0
MAIN VITAL OUTPUT MAPPING	10	20	40	80
AUX VITAL OUTPUT MAPPING	001	002	004	008
LOOP FREQUENCY (Khz)				
LOOP INDUCTANCE (MICRO HENRIES)				

SOFTWARE VERSION 4.02
• FIELD VERIFY

(2) E-1400 SETUP PARAMETERS

FUNCTION	CH. 1	CH. 2	CH. 3	CH. 4
FREQUENCY SETTING	2	4	6	8
SENSITIVIY SETTING	6*	6*	OFF*	OFF*
OPTION 1 (TEMP L DISPLAY)	OFF			
OPTION 2 (TEMP ΔL/L DISPLAY)	OFF			
OPTION 3 (NOISE FILTER)	3.00	3.00	3.00	3.00
OPTION 4 (TRACKING)	4.02	4.02	4.02	4.02
OPTION 5 (SENSITIVITY BOOST)	5.00	5.00	5.00	5.00
OPTION 6 (TEMP AUDIBLE SIGNAL)	OFF	OFF	OFF	OFF
CHECKLOOP INTERVAL	005	005	005	005
DETECTOR ID	001			
OPTION 7 (DETECTOR SYNC)	7.01			
OPTION 8 (ISL OPTION)	OFF			
OPTION 9 (SHUNT ENHANCEMENT SE)	OFF	OFF	OFF	OFF
MAIN VITAL OUTPUT DELAY	00.0	00.0	00.0	00.0
MAIN VITAL OUTPUT EXTENSION	00.0	00.0	00.0	00.0
MAIN VITAL OUTPUT MAPPING	10	20	40	80
AUX VITAL OUTPUT MAPPING	001	002	004	008
LOOP FREQUENCY (Khz)				
LOOP INDUCTANCE (MICRO HENRIES)				

SOFTWARE VERSION 4.02
• FIELD VERIFY

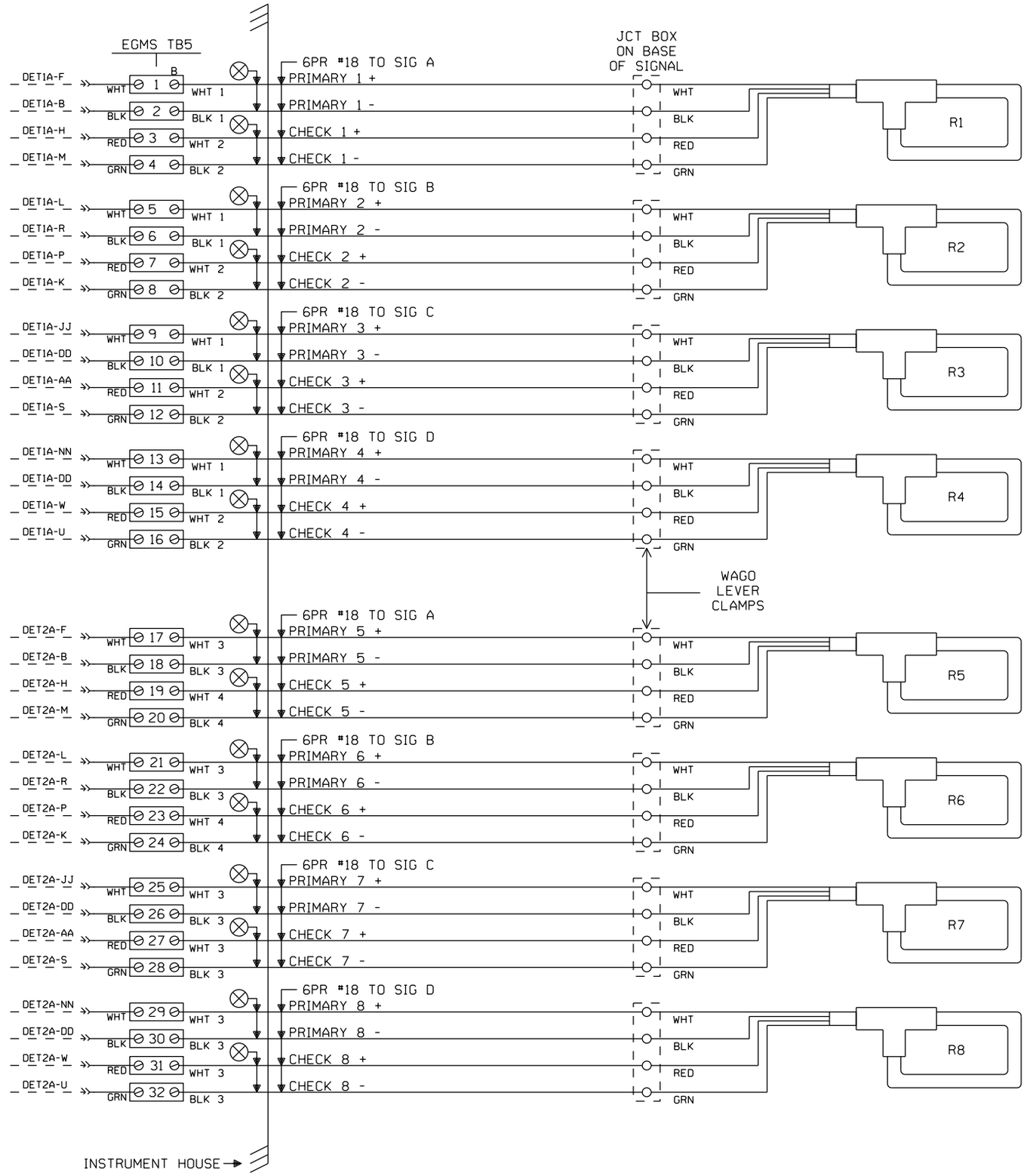

CABLE TABULATION

CABLE NO. (21) 6/PR #18 U.G.C. TO JCT BOX ON BASE OF GATE "A" (RCL PART #03-094-005)
CABLE NO. (22) 6/PR #18 U.G.C. TO JCT BOX ON BASE OF GATE "B" (RCL PART #03-094-005)
CABLE NO. (23) 6/PR #18 U.G.C. TO JCT BOX ON BASE OF GATE "C" (RCL PART #03-094-005)
CABLE NO. (24) 6/PR #18 U.G.C. TO JCT BOX ON BASE OF GATE "D" (RCL PART #03-094-005)

NEW SHEET

Designed: 08/21/12
TIER 3 PHASE 3
M.P.177.00 TO M.P.160.00
UPGRADE XINGS AND CP'S FOR HIGH SPEED RAIL
Rec#: WO#:22820
IS: MWK/ / /NST/MJF

MODIFICATION LEVEL	
O. A. LAST LEVEL CHECKED	DU
LAST LEVEL MOD THIS TYPICAL	DU
LAST LEVEL BY DESIGNER	DU
CHANGED FROM TYPICAL?	Y

rev 01.24.11 4K 2TKEGMS.9

CIRCUIT MODIFICATIONS ARE NOT TO BE MADE WITHOUT AUTHORITY FROM THE OFFICE OF SIGNAL DESIGN

Date: 08/21/12
Des: NST
Chk: MWK
AFE: 22820

UNION PACIFIC RAILROAD
WILLIAMSVILLE, ILLINOIS
MAIN STREET
SPRINGFIELD SUBDIVISION
Office of AVP Engineering - Signal Omaha, Nebraska

Sh.: 15B
DOT 294275U
MP: 173.02
ID: CSL17302.15BX

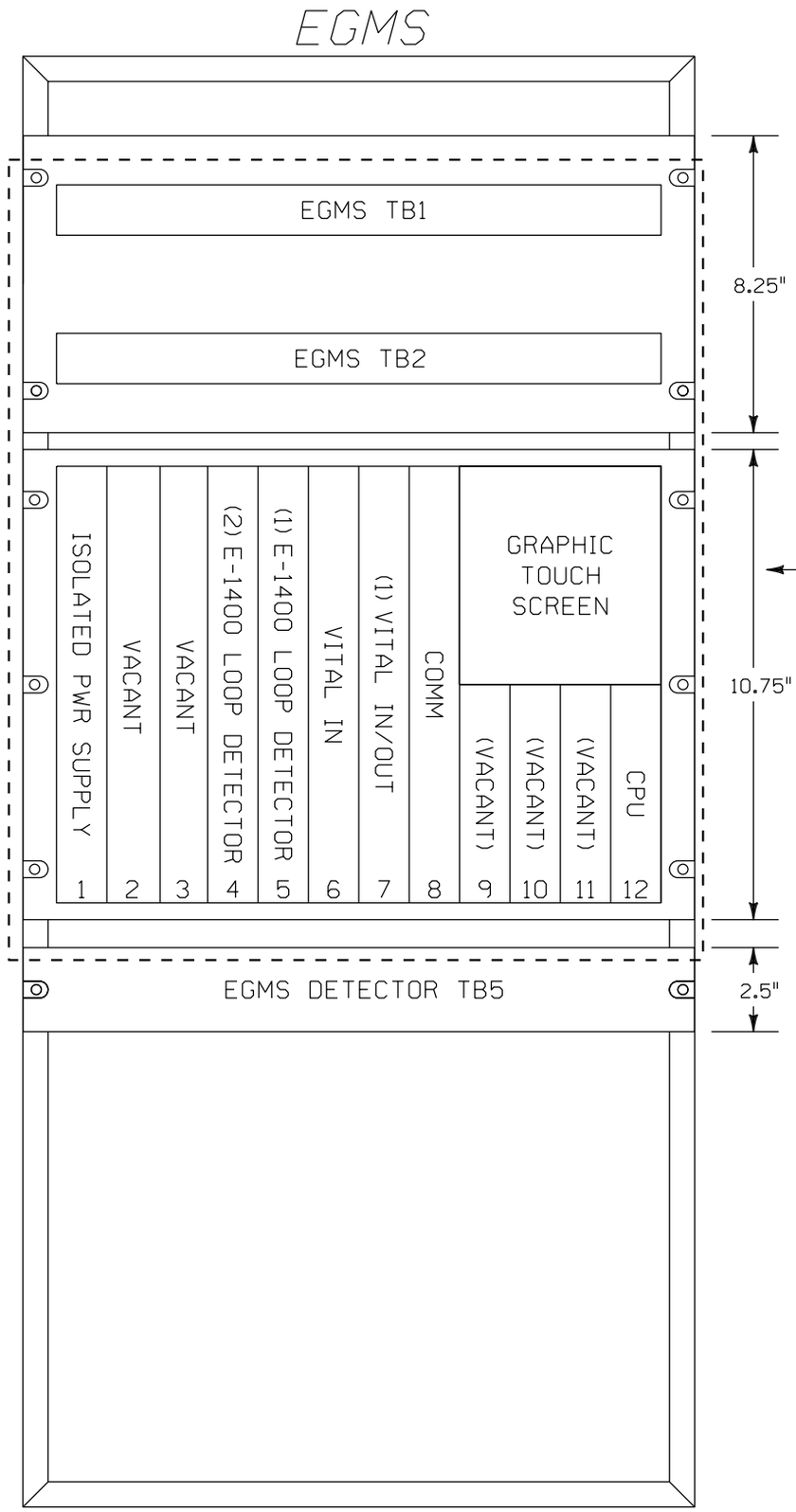

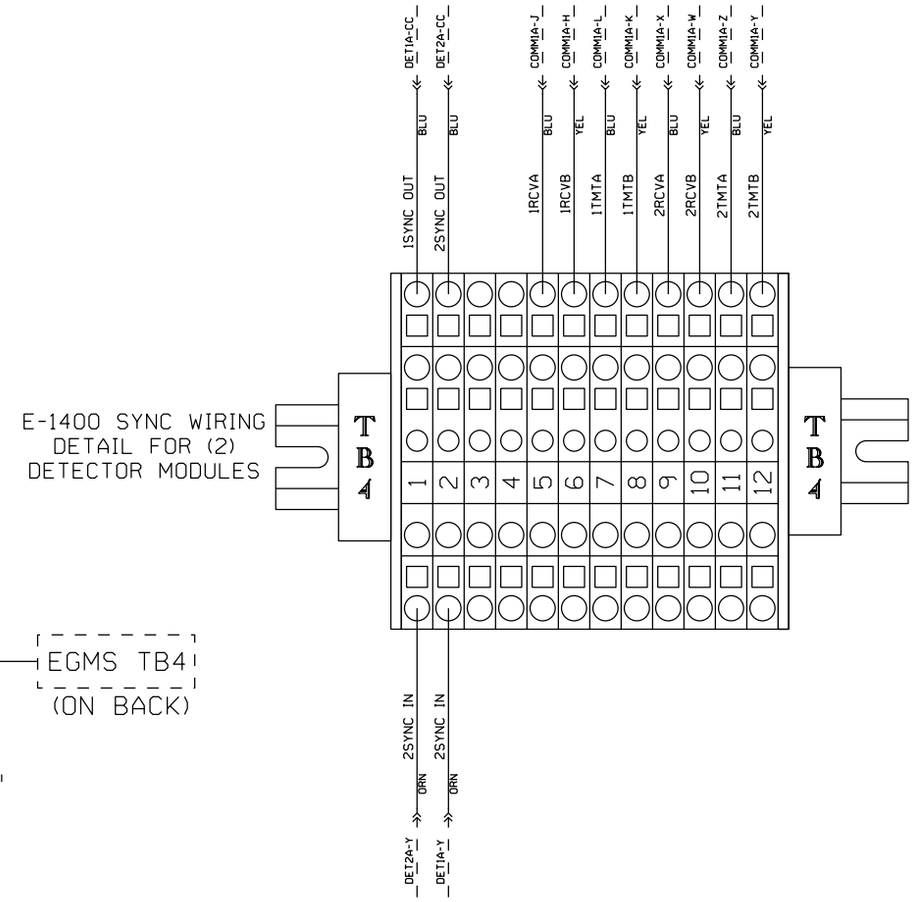

- - - = EXISTING

NEW SHEET

					Designed: 08/21/12 TIER 3 PHASE 3 M.P.177.00 TO M.P.160.00 UPGRADE XINGS AND CP'S FOR HIGH SPEED RAIL Rec#: WO#:22820 IS: MWK/ / /NST/MJF	MODIFICATION LEVEL D. A. LAST LEVEL CHECKED DU LAST LEVEL MOD THIS TYPICAL DU LAST LEVEL BY DESIGNER DU CHANGED FROM TYPICAL? Y REV 01.24.11 4K 2TKEGMS.9B	CIRCUIT MODIFICATIONS ARE NOT TO BE MADE WITHOUT AUTHORITY FROM THE OFFICE OF SIGNAL DESIGN	Date: 08/21/12 Des: NST Chk: MWK AFE: 22820	UNION PACIFIC RAILROAD WILLIAMSVILLE, ILLINOIS MAIN STREET SPRINGFIELD SUBDIVISION Office of AVP Engineering - Signal Omaha, Nebraska	Sh.: 15C DOT 294275U MP: 173.02 ID: CSL17302.15CX

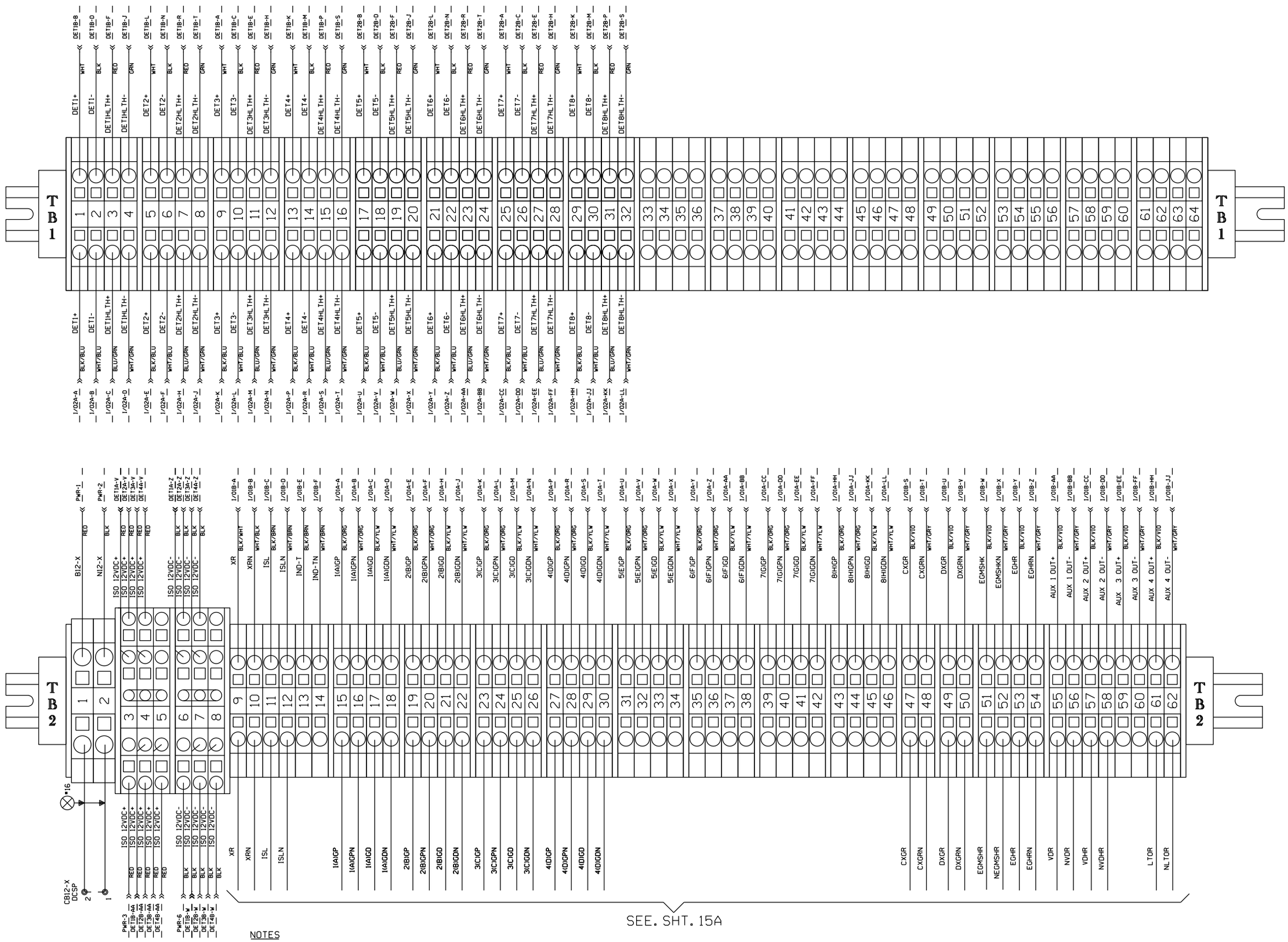

NOTES

1. TB1 PROVIDES AN EXTERNAL PASS THROUGH BETWEEN THE E-1400 MODULES AND THE VITAL INPUT MODULE IN CHASSIS POSITION 6. EGMS OR EGMS+ UNITS CONFIGURED FOR LESS THAN 4 EACH E-1400 MODULES WILL ONLY BE WIRED AS REQUIRED.
2. TB2-3 THROUGH TB2-8 PROVIDE A CONNECTION BUS FOR INTERNAL SUPPLY VOLTAGES AND MUST NOT BE USED TO SUPPLY OTHER CIRCUITS.

NEW SHEET

					Designed: 08/21/12 TIER 3 PHASE 3 M.P.177.00 TO M.P.160.00 UPGRADE XINGS AND CP'S FOR HIGH SPEED RAIL Rec#: WO#:22820 IS: MWK/ / /NST/MJF	MODIFICATION LEVEL O.A. LAST LEVEL CHECKED DU LAST LEVEL MOD THIS TYPICAL DU LAST LEVEL BY DESIGNER DU CHANGED FROM TYPICAL? Y REV 01.24.11 4K 2TKEGMS.9C	CIRCUIT MODIFICATIONS ARE NOT TO BE MADE WITHOUT AUTHORITY FROM THE OFFICE OF SIGNAL DESIGN	Date: 08/21/12 Des: NST Chk: MWK AFE: 22820	UNION PACIFIC RAILROAD WILLIAMSVILLE, ILLINOIS MAIN STREET SPRINGFIELD SUBDIVISION Office of AVP Engineering - Signal Omaha, Nebraska	Sh.: 15D DOT 294275U MP: 173.02 ID: CSL17302.15DX

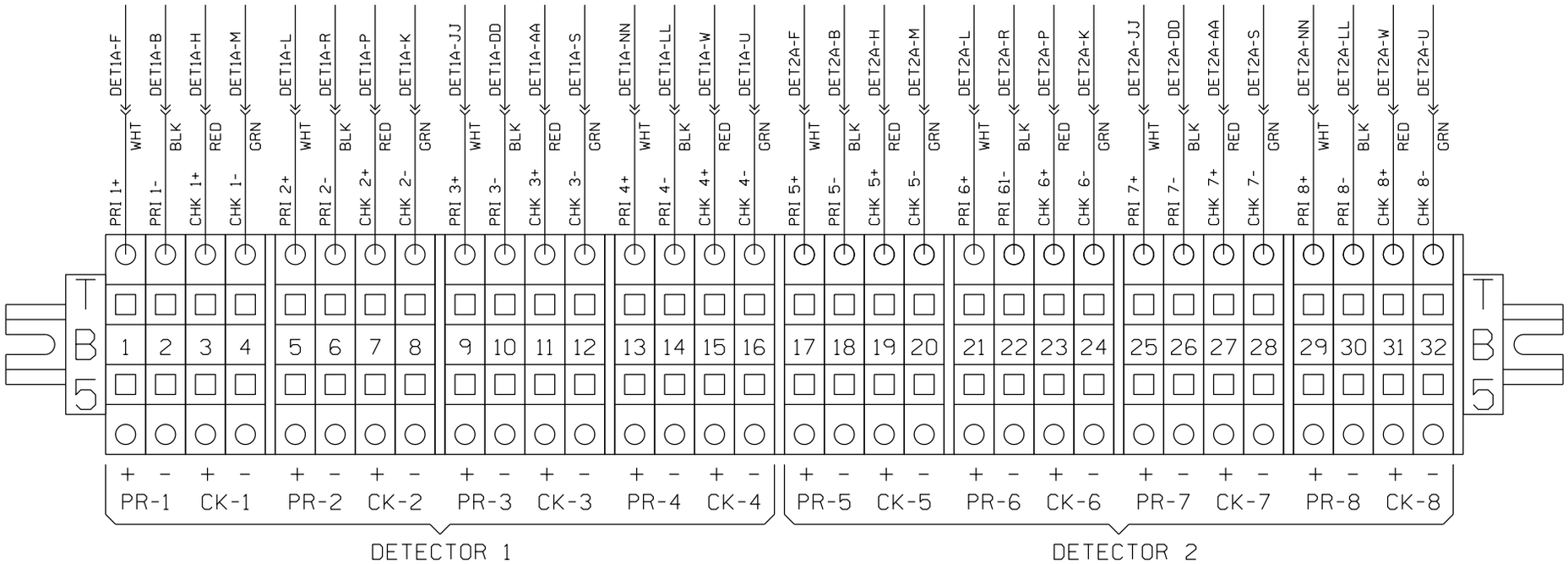

NEW SHEET

					Designed: 08/21/12 TIER 3 PHASE 3 M.P.177.00 TO M.P.160.00 UPGRADE XINGS AND CP'S FOR HIGH SPEED RAIL Rec#: WO#:22820 IS: MWK/ / /NST/MJF	MODIFICATION LEVEL O. A. LAST LEVEL CHECKED DU LAST LEVEL MOD THIS TYPICAL DU LAST LEVEL BY DESIGNER DU CHANGED FROM TYPICAL? Y REV 01.24.11 4K 2TKEGMS.9D	CIRCUIT MODIFICATIONS ARE NOT TO BE MADE WITHOUT AUTHORITY FROM THE OFFICE OF SIGNAL DESIGN	Date: 08/21/12 Des: NST Chk: MWK AFE: 22820	UNION PACIFIC RAILROAD WILLIAMSVILLE, ILLINOIS MAIN STREET SPRINGFIELD SUBDIVISION Office of AVP Engineering - Signal Omaha, Nebraska	Sh.: 15E DOT 294275U MP: 173.02 ID: CSL17302.15EX

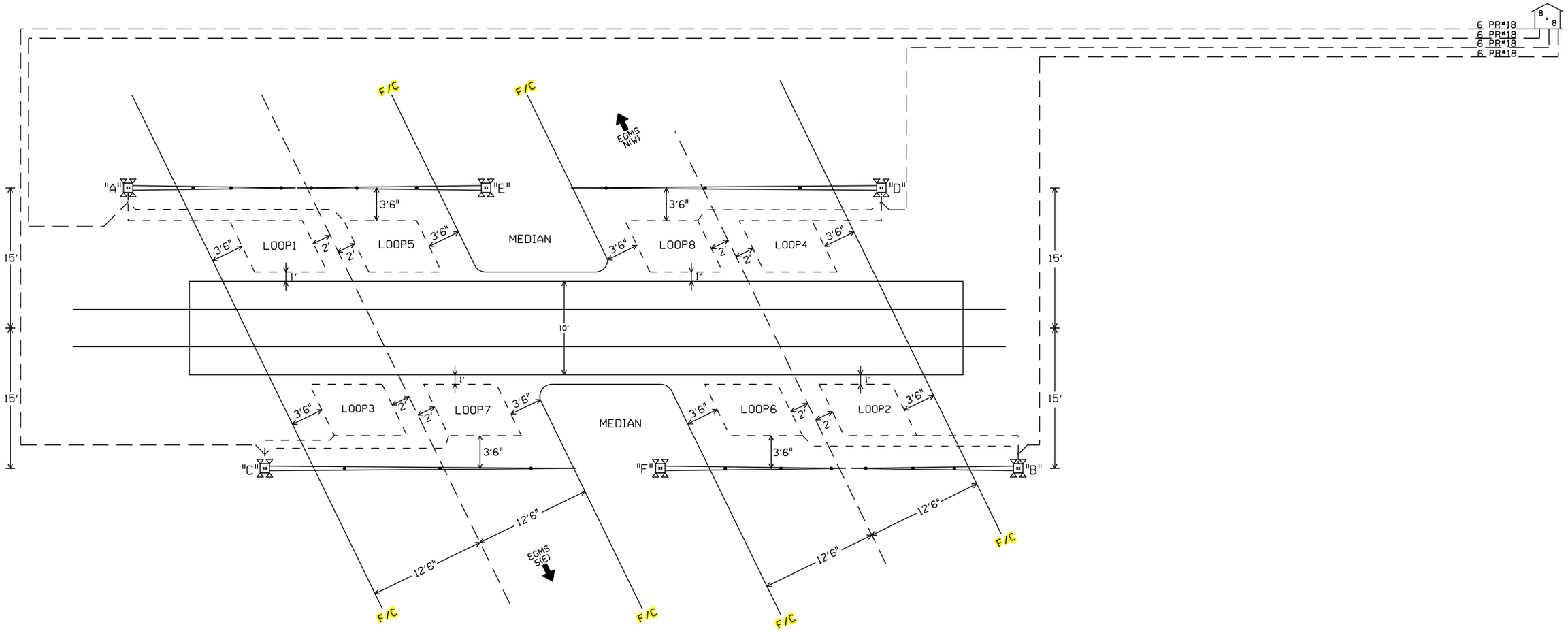

LOOP SIZES

LOOP #	LOOP PERIMETER	LOOP LEAD-IN	PART #
1	28′	25′	PLC-28-25
2	28′	25′	PLC-28-25
3	28′	25′	PLC-28-25
4	28′	25′	PLC-28-25
5	28′	50′	PLC-28-50
6	28′	50′	PLC-28-50
7	28′	25′	PLC-28-25
8	28′	25′	PLC-28-25

NOTES:

1. DIMENSIONS ON THIS PAGE ARE SHOWN TO PROVIDE GUIDANCE FOR CONSTRUCTION CREWS AND FUTURE MAINTENANCE REPAIRS.
2. REFER TO SAFETRAN EGMS STANDARDS AND RECOMENDED PRACTICES FOR LOOP LAYOUT DESIGN DETAILS.
3. SAFETRAN EGMS JUNCTION BOX INSTALLED ON TOP OF EACH FOUNDATION.
4. INSTALL SAFETRAN 6 PAIR #18 CABLE FROM JUNCTION BOX TO BUNGALOW.
5. COMBINATION CURB & GUTTER TYPE B-6.18
6. F/C = FACE OF CURB

℄ +

LOOP PLACEMENT SKETCH

NOT TO SCALE

= IN

= OUT

LOOP PARAMETERS

7′9½"

LOOPS

(MIN. 5′) 1,2,3,4 (MIN. 5′)

6′1½" 5,6,7&8 6′1½"

AREA = 42.9 SqFt

PERIMETER = 27′9¾"

~~NEW~~ ~~SHEET~~

				Designed: 2/25/15 TIER 3 PHASE 3 M.P.177.00 TO M.P.160.00 HSR SCOPE CHANGE Rec#: WO#:22820 IS: MWK/ / /NST/JVJ	Designed: 08/21/12 TIER 3 PHASE 3 M.P.177.00 TO M.P.160.00 UPGRADE XINGS AND CP'S FOR HIGH SPEED RAIL Rec#: WO#:22820 IS: MWK/ / /NST/MJF	MODIFICATION LEVEL O. A. LAST LEVEL CHECKED DU LAST LEVEL MOD THIS TYPICAL DU LAST LEVEL BY DESIGNER DU CHANGED FROM TYPICAL? Y REV 01.24.11 4K 2TKEGMS.8B	CIRCUIT MODIFICATIONS ARE NOT TO BE MADE WITHOUT AUTHORITY FROM THE OFFICE OF SIGNAL DESIGN	Date: 08/21/12 Des: NST Chk: MWK AFE: 22820	UNION PACIFIC RAILROAD WILLIAMSVILLE, ILLINOIS MAIN STREET SPRINGFIELD SUBDIVISION Office of AVP Engineering-Signal Omaha, Nebraska	Sh.: 15F DOT 294275U MP: 173.02 ID: CSL17302.15FX

NOTES:

⊗ = TWISTED WIRES

⊘ = OBSERVE CORRECT POLARITY. EQUIPMENT WILL BE DAMAGED IF CONNECTIONS ARE REVERSED

ALL WIRING TO TRACK 2C. NO.6 U.G.B.T. CABLE UNLESS OTHERWISE SPECIFIED.

ALL CASE WIRING TO BE NO.16 UNLESS OTHERWISE SPECIFIED.

ALL GROUND CONNECTIONS TO BE #6 OR LARGER. SIGNAL WIRING SHOP TO RUN ALL GROUND CONNECTIONS.

ENSURE TRACK POLARITY IS TRANSPOSED ACROSS ALL INSULATED JOINTS.

⧖ = TEST TERMINALS MUST BE INSTALLED ON ALL WIRING CONNECTED TO EXTERNAL CABLES (EXCEPT TRACK AND A.C. POWER WIRES).

PORTABLE GENERATOR EXTENSION CORD FOR 240V TO 240V IS PROVIDED AS WELL AS A 120V TO 240V ADAPTER.

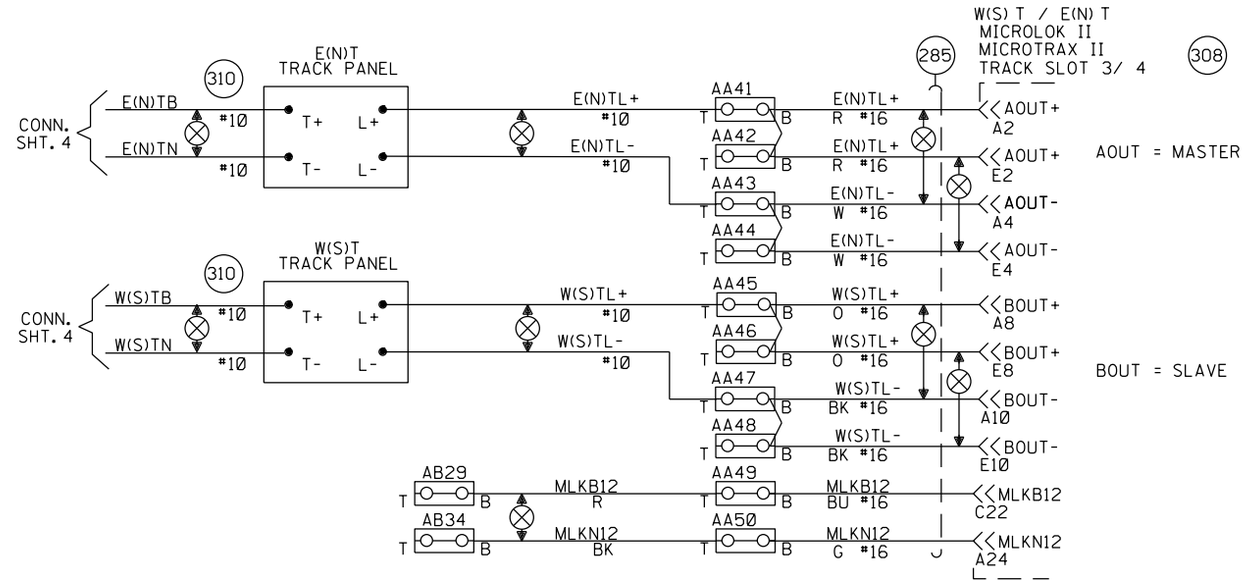

NEW SHEET

					Designed: 08/21/12 TIER 3 PHASE 3 M.P.177.00 TO M.P.160.00 UPGRADE XINGS AND CP'S FOR HIGH SPEED RAIL Rec#: WO#:22820 IS: MWK/ / /NST/MJF	MODIFICATION LEVEL		CIRCUIT MODIFICATIONS ARE NOT TO BE MADE WITHOUT AUTHORITY FROM THE OFFICE OF SIGNAL DESIGN	Date: 08/21/12	UNION PACIFIC RAILROAD	Sh.: 16
						O.A. LAST LEVEL CHECKED	DU		Des: NST	WILLIAMSVILLE, ILLINOIS MAIN STREET SPRINGFIELD SUBDIVISION	DOT 294275U
						LAST LEVEL MOD THIS TYPICAL	DU		Chk: MWK		MP: 173.02
						LAST LEVEL BY DESIGNER	DU		AFE: 22820		ID: CSL17302.16S
						CHANGED FROM TYPICAL?	Y			Office of AVP Engineering - Signal Omaha, Nebraska	
						REV 8/20/10 1TMLHBINTU.1					

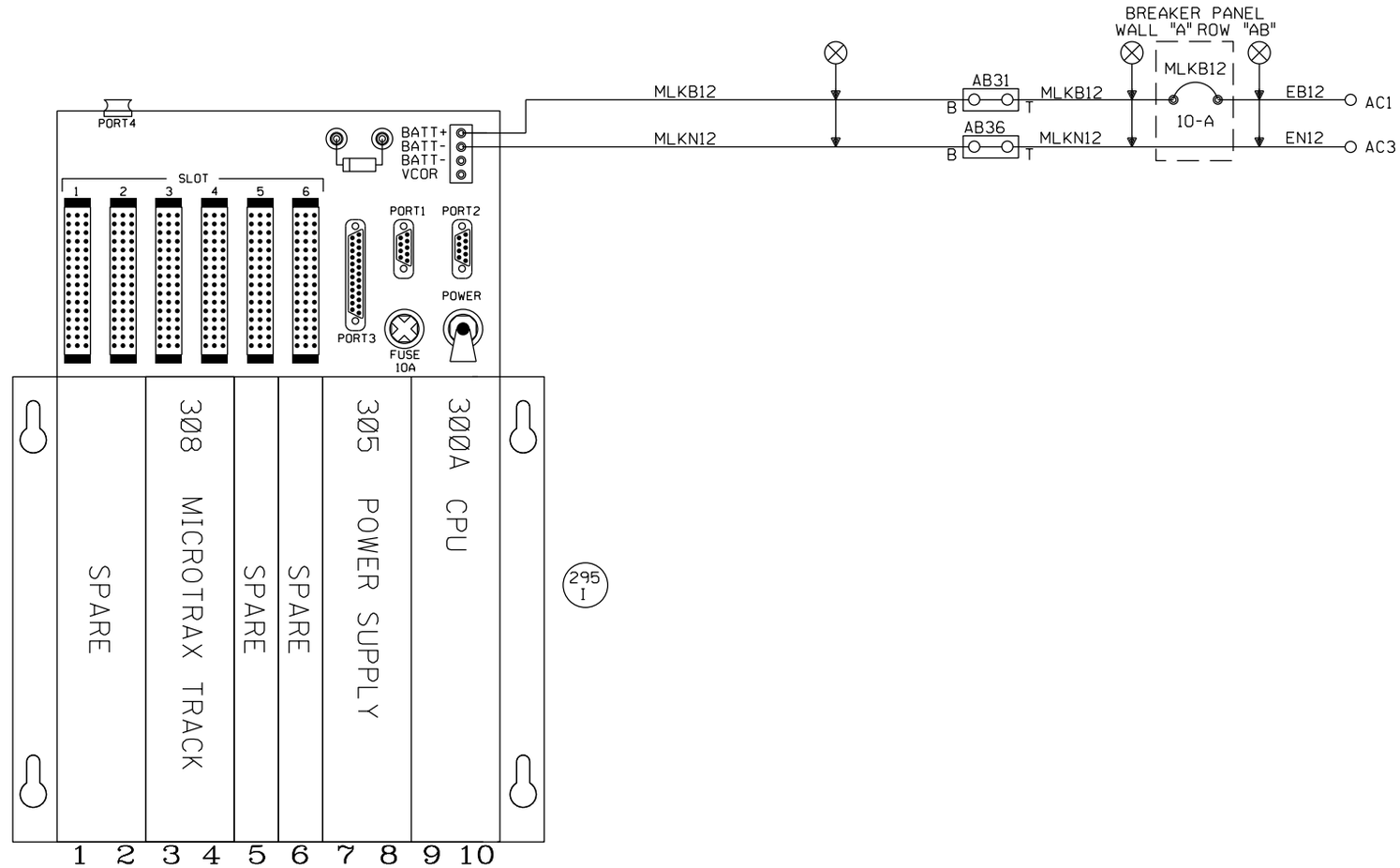

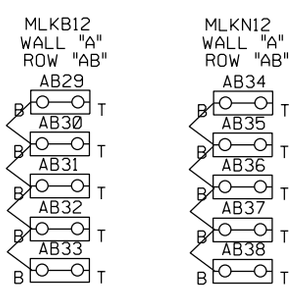

NEW SHEET

					Designed: 08/21/12 TIER 3 PHASE 3 M.P.177.00 TO M.P.160.00 UPGRADE XINGS AND CP'S FOR HIGH SPEED RAIL Rec#: WO#:22820 IS: MWK/ / /NST/MJF	MODIFICATION LEVEL O. A. LAST LEVEL CHECKED DU LAST LEVEL MOD THIS TYPICAL DU LAST LEVEL BY DESIGNER DU CHANGED FROM TYPICAL? Y REV 8/20/10 ITMLHBINTU.4	CIRCUIT MODIFICATIONS ARE NOT TO BE MADE WITHOUT AUTHORITY FROM THE OFFICE OF SIGNAL DESIGN	Date: 08/21/12 Des: NST Chk: MWK AFE: 22820	UNION PACIFIC RAILROAD WILLIAMSVILLE, ILLINOIS MAIN STREET SPRINGFIELD SUBDIVISION Office of AVP Engineering - Signal Omaha, Nebraska	Sh.: 17 DOT 294275U MP: 173.02 ID: CSL17302.17S

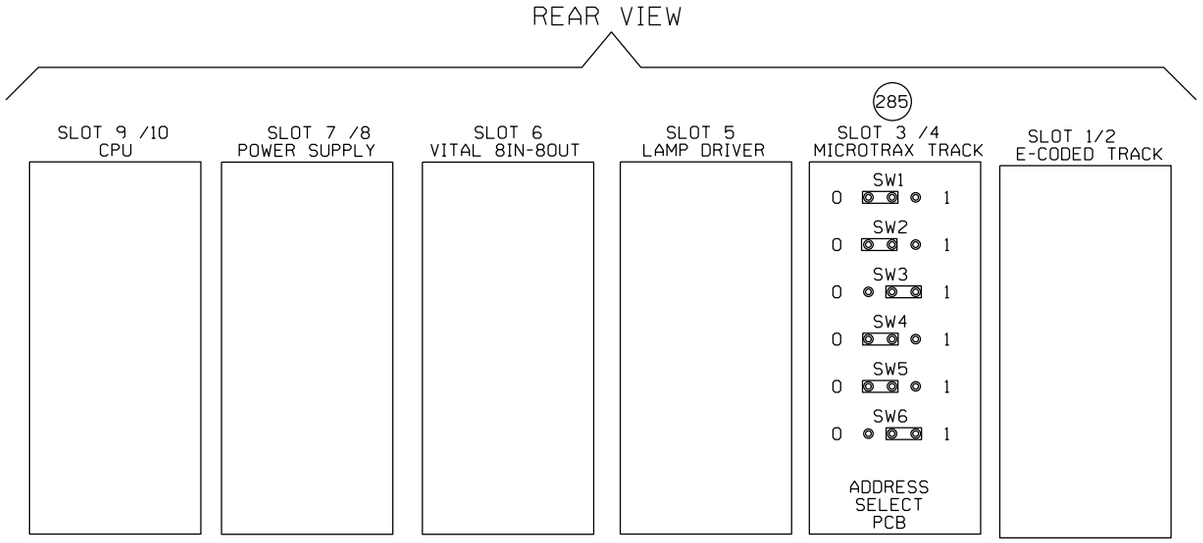

NOTE: FOR PTC COMPATIBLE CPU JUMPER SETTINGS REFER TO ANSALDO MANUAL 1D1.0028 PAGE 1-26 1-27 1-28 REV.1 DATE 8/2009

ML8RRH REV. B

15 SEC SLOW PICK ET TO PREVENT JOINT HOP	
15 SEC SLOW PICK WT TO PREVENT JOINT HOP	
PROGRAM ID 1 (BINARY 1)	
PROGRAM ID 2 (BINARY 2)	
PROGRAM ID 3 (BINARY 4)	X
PROGRAM ID 4 (BINARY 8)	
PROGRAM ID 5 (BINARY 16)	
PROGRAM ID 6 (BINARY 32)	X
PROGRAM ID 7 (BINARY 64)	X
PROGRAM ID 8 (BINARY 128)	
CODE P?	X

NEW SHEET

Designed: 08/21/12
TIER 3 PHASE 3
M.P.177.00 TO
M.P.160.00
UPGRADE XINGS AND
CP'S FOR HIGH
SPEED RAIL
Rec#: WO#:22820
IS: MWK/
/ /NST/MJF

MODIFICATION LEVEL	
O.A. LAST LEVEL CHECKED	DU
LAST LEVEL MOD THIS TYPICAL	DU
LAST LEVEL BY DESIGNER	DU
CHANGED FROM TYPICAL?	Y

REV 8/20/10 1TMLHBINTU.5

CIRCUIT MODIFICATIONS ARE NOT TO BE MADE WITHOUT AUTHORITY FROM THE OFFICE OF SIGNAL DESIGN

Date: 08/21/12
Des: NST
Chk: MWK
AFE: 22820

UNION PACIFIC RAILROAD
WILLIAMSVILLE, ILLINOIS
MAIN STREET
SPRINGFIELD SUBDIVISION
Office of AVP Engineering - Signal Omaha, Nebraska

Sh.: 18
DOT 294275U
MP: 173.02
ID: CSL17302.18S

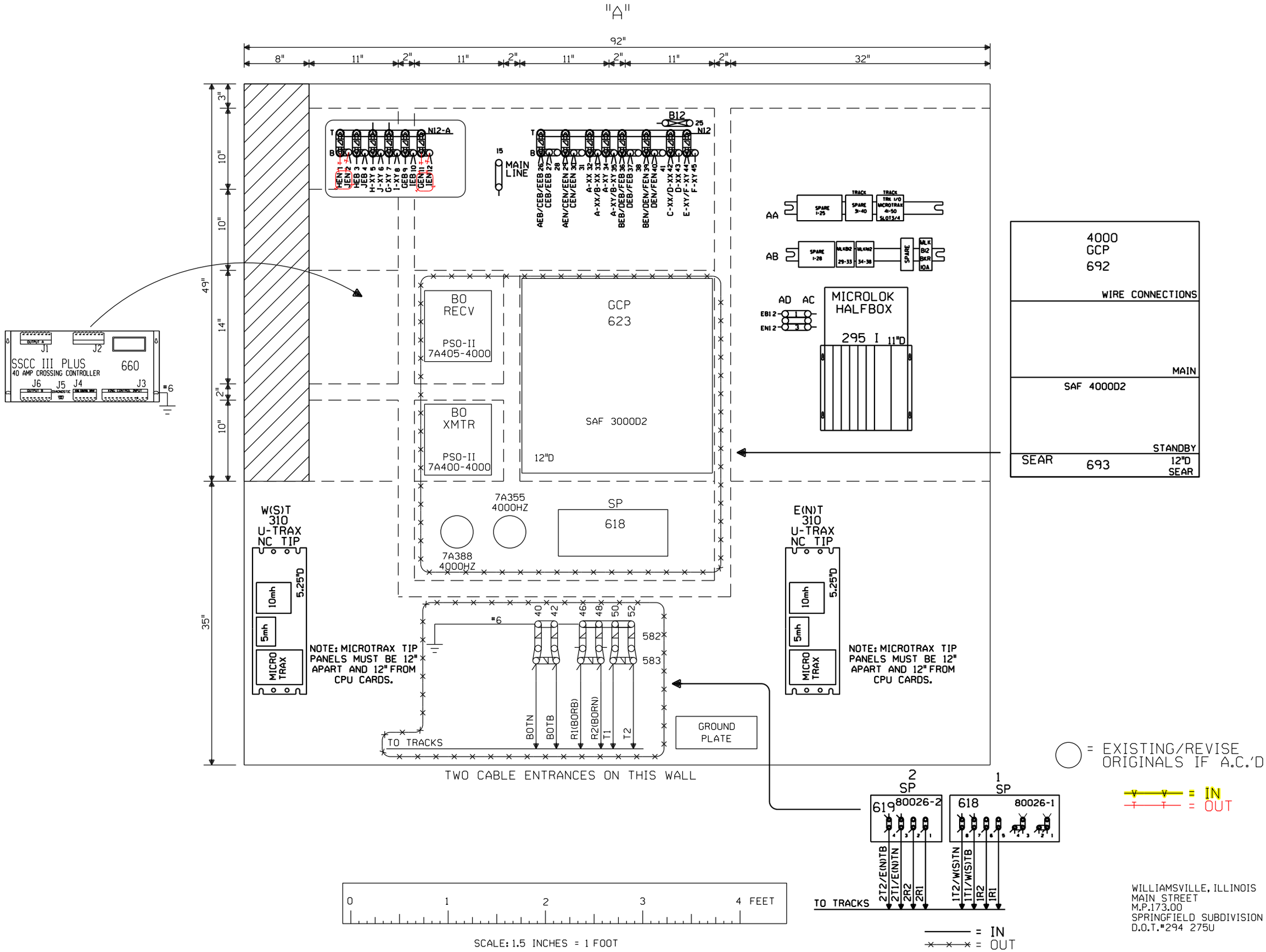

Designed: 2/25/15
TIER 3 PHASE 3
M.P.177.00 TO
M.P.160.00
HSR SCOPE CHANGE
Rec#: WO#:22820
IS: MWK/
NST/JVJ

Designed: 08/21/12
TIER 3 PHASE 3
M.P.177.00 TO
M.P.160.00
UPGRADE XINGS AND
CP'S FOR HIGH
SPEED RAIL
Rec#: WO#:22820
IS: MWK/
/NST/MJF

REV. 6-20-08
UPGRADED CROSSING
PROTECTION FOR THE
HIGH SPEED RAIL
PROJ. FROM MAZONIA
TO SPRINGFIELD
W.O. # 00183
REC. #15265
3-14-06 JJF
GNT/WITT/WITT/JNM

MODIFICATION LEVEL	
Q.A. LAST LEVEL CHK'D.	DA
LAST LEVEL MOD. THIS TYP.	CZ
LAST LEVEL BY DESIGNER.	DD
CHANGED FROM TYP.? Y/N	Y

CIRCUIT MODIFICATIONS ARE NOT TO BE MADE WITHOUT AUTHORITY FROM THE OFFICE OF SIGNAL DESIGN

DES: WITT.IND.
DIG: WITT.IND.
CHK: J.J.F.
A.F.E. 00183
ID= CSL17300.DX
19X

UNION PACIFIC RAILROAD
BLOOMINGTON, ILLINOIS TO
VALLEY JCT., ILLINOIS
C.T.C. CIRCUITS
Office of AVP Engineering-Signal OMAHA NEBR.

DATE 4-1-02
SHEET 10 19
DWG 173.00
RTE-CSL

(REV. 7-9-00) (HOUSE.TYP)

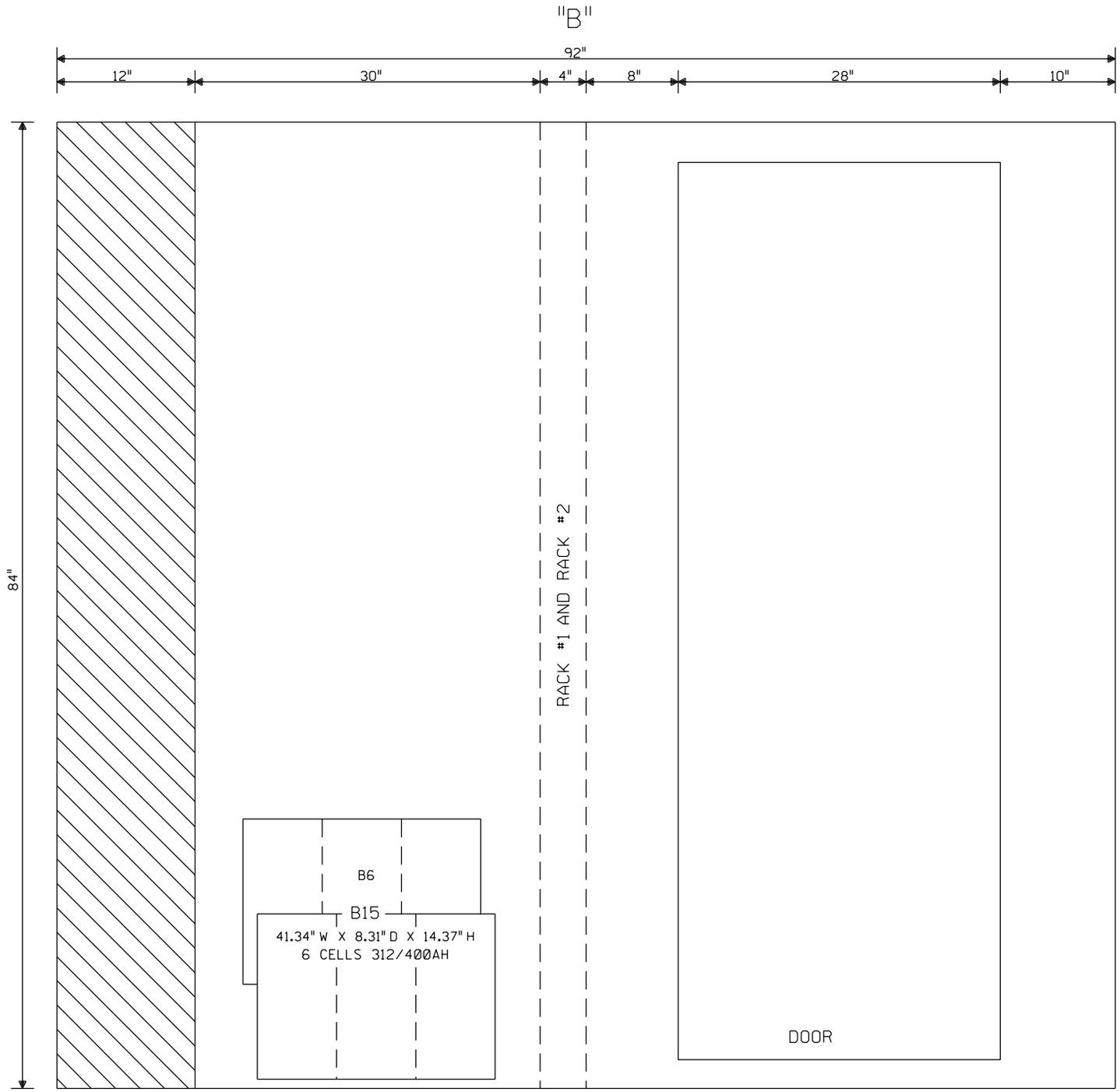

PLAN VIEW
8'x8' HOUSE
-NO SCALE-

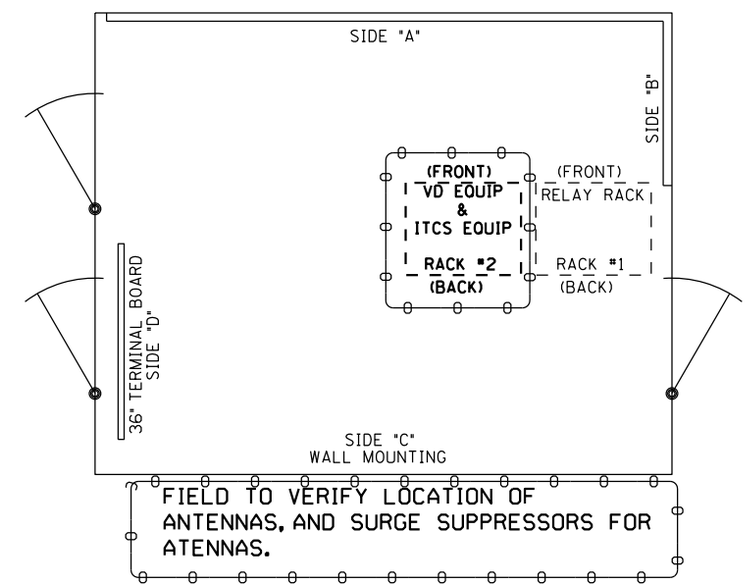

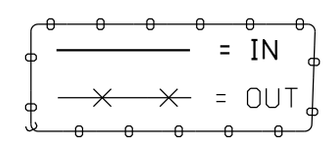

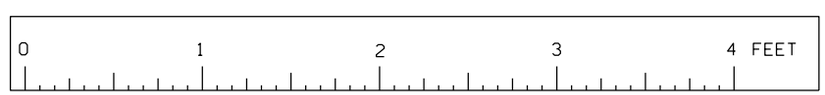

SCALE: 1.5 INCHES = 1 FOOT

= IN
= OUT

WILLIAMSVILLE, ILLINOIS
MAIN STREET
M.P.173.00
SPRINGFIELD SUBDIVISION
D.O.T.#294 275U

Designed: 08/21/12
TIER 3 PHASE 3
M.P.177.00 TO
M.P.160.00
UPGRADE XINGS AND
CP'S FOR HIGH
SPEED RAIL
Rec#: WO#:22820
IS: MWK/
/NST/MJF

02-24-09
INSTALL MONITOR RACK
FOR XINGS
W.O. 87933 MAS

REV. 6-20-08
UPGRADED CROSSING
PROTECTION FOR THE
HIGH SPEED RAIL
PROJ. FROM MAZONIA
TO SPRINGFIELD
W.O. # 00183
REC. #15265
3-14-06 JJF
GNT/WITT/WITT/JNM

MODIFICATION LEVEL	
Q.A. LAST LEVEL CHK'D.	DA
LAST LEVEL MOD. THIS TYP.	CZ
LAST LEVEL BY DESIGNER.	DD
CHANGED FROM TYP.? Y/N	Y

CIRCUIT MODIFICATIONS ARE NOT TO BE MADE WITHOUT AUTHORITY FROM THE OFFICE OF SIGNAL DESIGN

DES: WITT.IND.
DIG: WITT.IND.
CHK: J.J.F.
A.F.E. 00183
ID= CSL17300(11X)
20X

UNION PACIFIC RAILROAD
BLOOMINGTON, ILLINOIS TO
VALLEY JCT., ILLINOIS
C.T.C. CIRCUITS
Office of AVP Engineering-Signal OMAHA NEBR.

DATE 4-1-02
SHEET (11) 20
DWG 173.00
RTE-CSL

(REV. 7-9-00) (HOUSE.TYP)

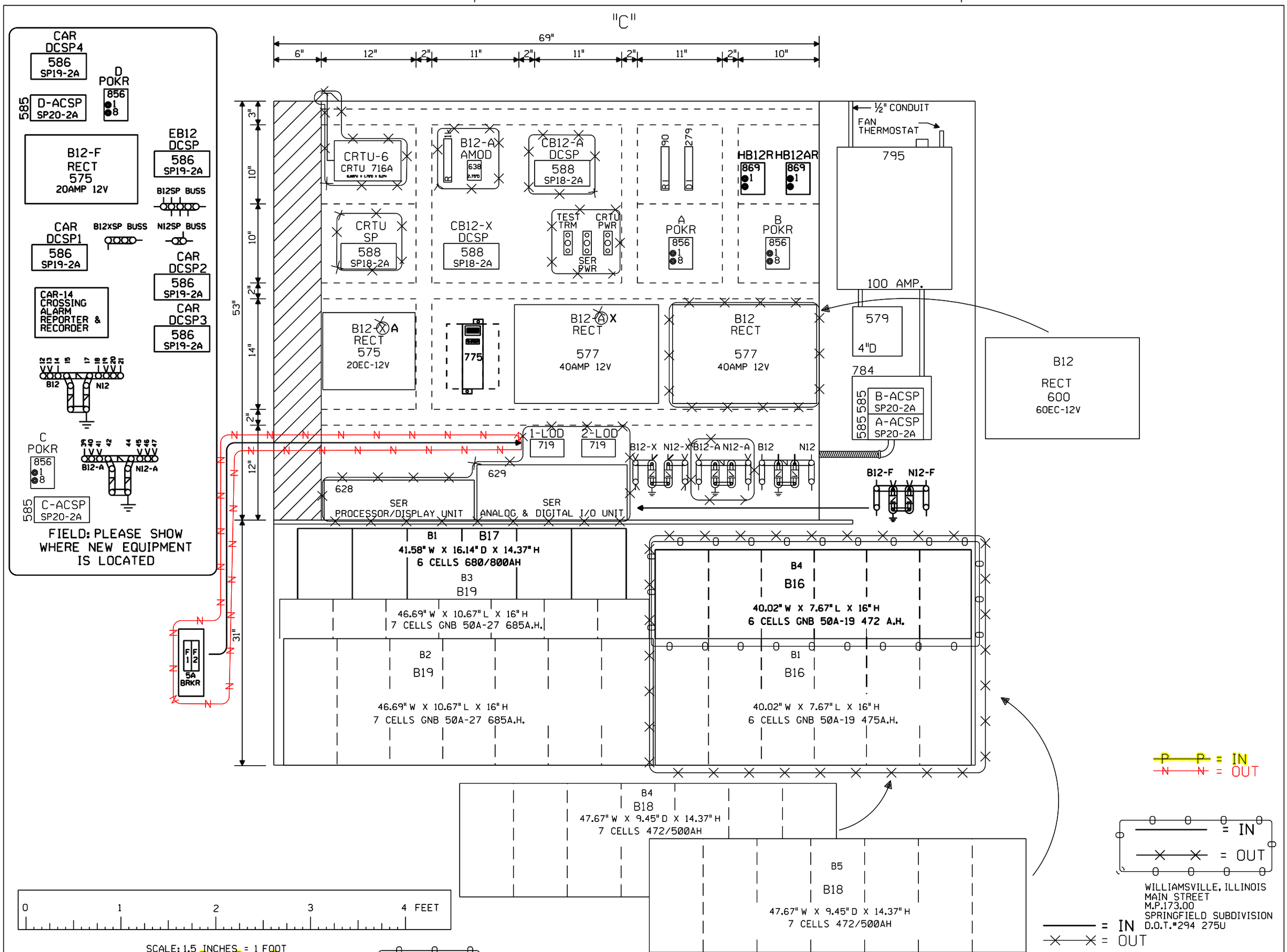

Designed: 2/25/15
TIER 3 PHASE 3
M.P.177.00 TO
M.P.160.00
HSR SCOPE CHANGE
Rec#:
JS:
WO#:22820
MWK/
/NST/JVJ

Designed: 08/21/12
TIER 3 PHASE 3
M.P.177.00 TO
M.P.160.00
UPGRADE XINGS AND
CP'S FOR HIGH
SPEED RAIL
WO#:22820
MWK/
/NST/MJF

02-24-09
INSTALL MONITOR RACK
FOR XINGS
W.O. 87933 MAS

REV. 6-20-08
UPGRADED CROSSING
PROTECTION FOR THE
HIGH SPEED RAIL
PROJ. FROM MAZONIA
TO SPRINGFIELD
W.O. # 00183
REC. #15265
3-14-06 JJF
GNT/WITT/WITT/JNM

MODIFICATION LEVEL	
Q.A. LAST LEVEL CHK'D.	DA
LAST LEVEL MOD. THIS TYP.	CZ
LAST LEVEL BY DESIGNER.	DD
CHANGED FROM TYP.? Y/N	Y

CIRCUIT MODIFICATIONS ARE NOT TO BE MADE WITHOUT AUTHORITY FROM THE OFFICE OF SIGNAL DESIGN

DES: WITT.IND.
DIG: WITT.IND.
CHK: J.J.F.
A.F.E. 00183
ID= CSL17300(12) 21X

UNION PACIFIC RAILROAD
BLOOMINGTON, ILLINOIS TO
VALLEY JCT., ILLINOIS
C.T.C. CIRCUITS
Office of AVP Engineering-Signal OMAHA NEBR.

DATE 4-1-02
SHEET (12) 21
DWG 173.00
RTE-CSL

(REV. 7-9-00) (HOUSE.TYP)

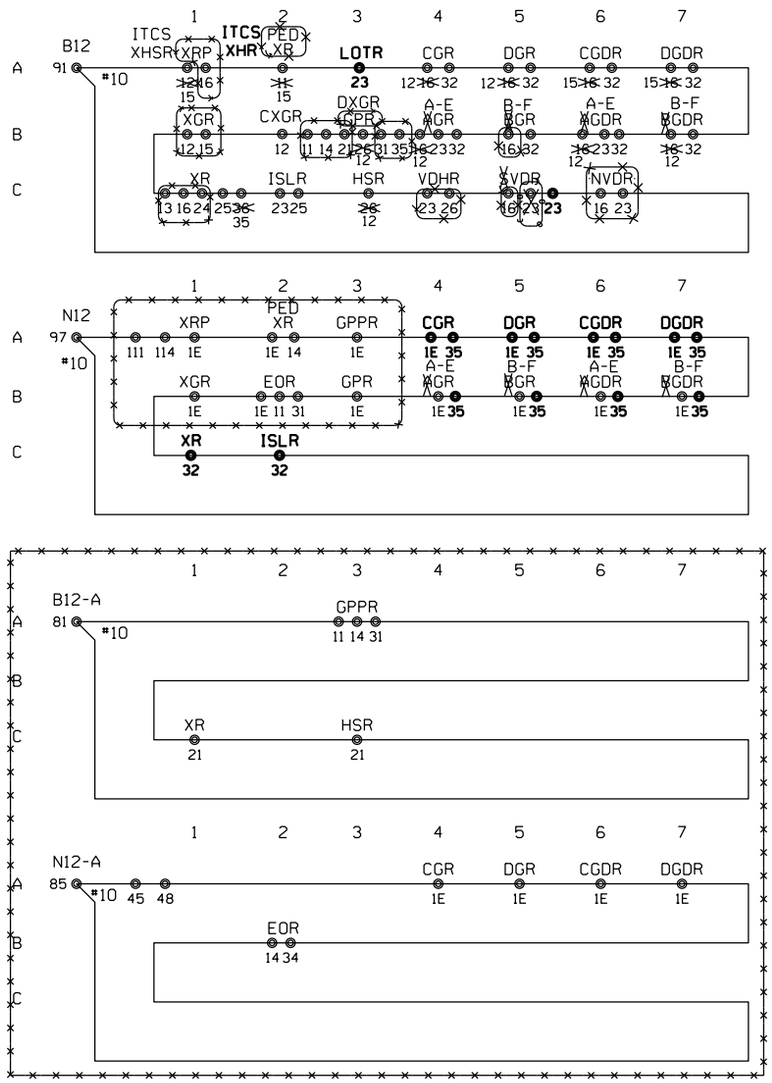

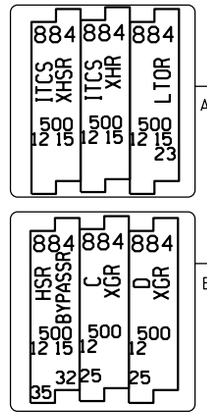

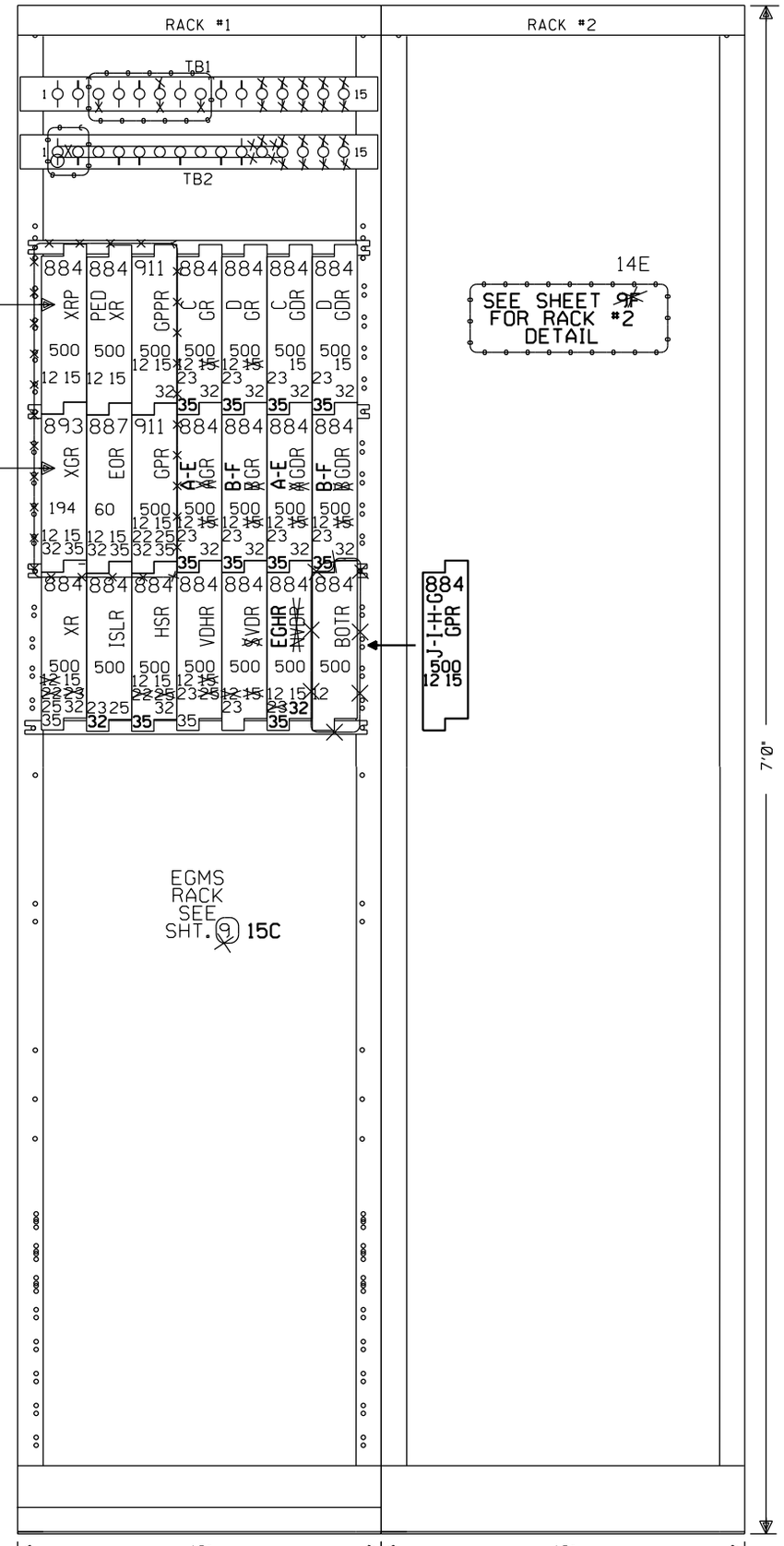

= EXISTING/REVISE ORIGINALS IF A.C.'D

= IN

= OUT

WILLIAMSVILLE, ILLINOIS
MAIN STREET
M.P.173.00
SPRINGFIELD SUBDIVISION
D.O.T.#294 275U

= IN

= OUT

Designed: 08/21/12
TIER 3 PHASE 3
M.P.177.00 TO
M.P.160.00
UPGRADE XINGS AND
CP'S FOR HIGH
SPEED RAIL
Rec*: WO*:22820
IS: MWK/
/ /NST/MJF

02-24-09
INSTALL MONITOR RACK FOR XINGS
W.O. 87933 MAS

REV. 6-20-08
UPGRADED CROSSING
PROTECTION FOR THE
HIGH SPEED RAIL
PROJ. FROM MAZONIA
TO SPRINGFIELD
W.O. # 00183
REC. #15265
3-14-06 JJF
GNT/WITT/WITT/JNM

MODIFICATION LEVEL	
Q.A. LAST LEVEL CHK'D.	DA
LAST LEVEL MOD. THIS TYP.	CZ
LAST LEVEL BY DESIGNER.	DD
CHANGED FROM TYP.? Y/N	Y

CIRCUIT MODIFICATIONS ARE NOT TO BE MADE WITHOUT AUTHORITY FROM THE OFFICE OF SIGNAL DESIGN

DES: WITT.IND.
DIG: WITT.IND.
CHK: J.J.F.
A.F.E. 00183
ID= CSL17300(13x) 22x

UNION PACIFIC RAILROAD
BLOOMINGTON, ILLINOIS TO
VALLEY JCT., ILLINOIS
C.T.C. CIRCUITS
Office of AVP Engineering-Signal OMAHA NEBR.

DATE 4-1-02
SHEET 13 22
DWG 173.00
RTE-CSL

(REV. 7-9-00) (HOUSE.TYP)

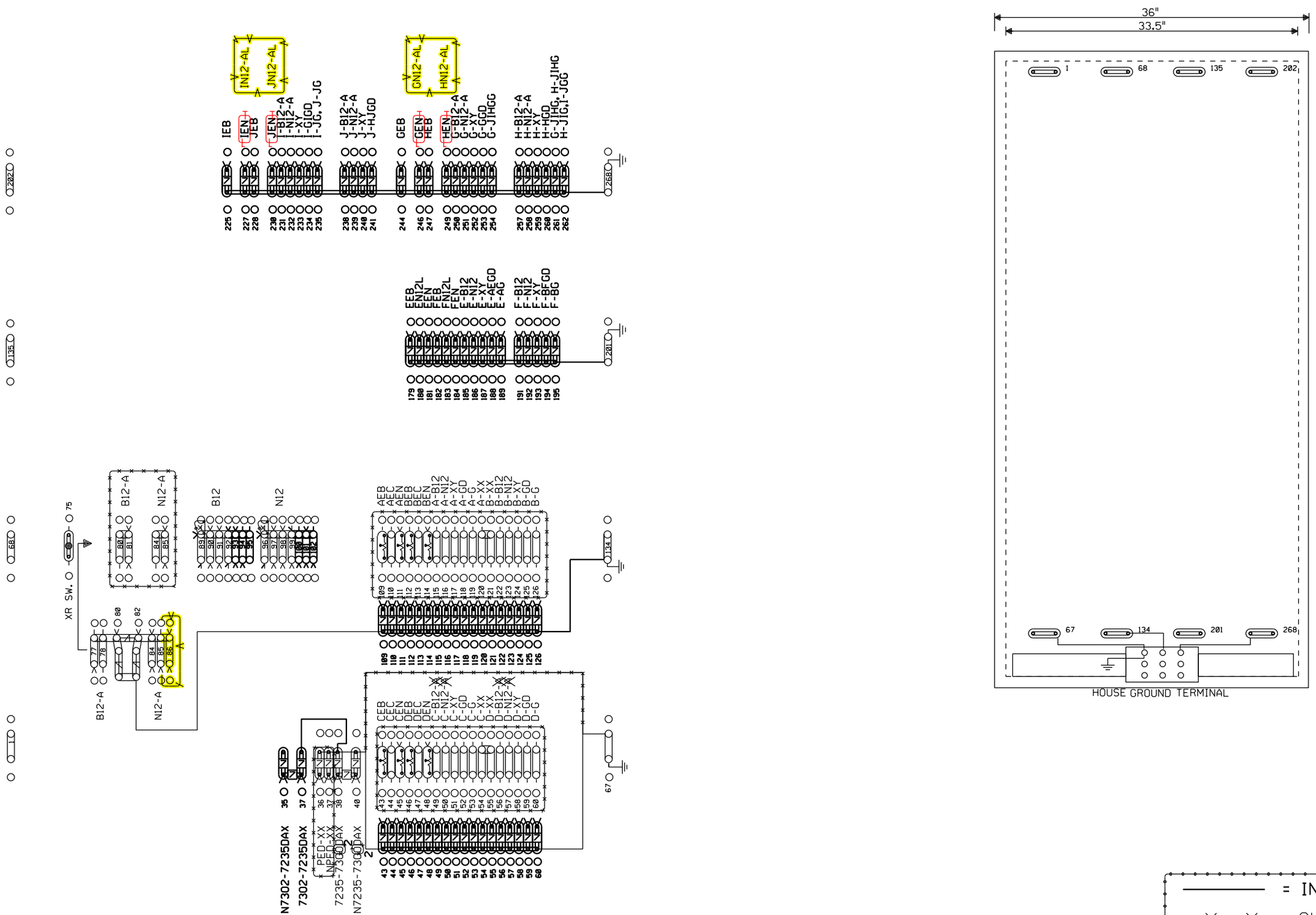

WILLIAMSVILLE, ILLINOIS
MAIN STREET
M.P.173.00
SPRINGFIELD SUBDIVISION
D.O.T.#294 275U

Designed: 2/25/15
TIER 3 PHASE 3
M.P.177.00 TO
M.P.160.00
HSR SCOPE CHANGE
Rec#:
IS:
WO#:22820
MWK/
NST/JVJ

Designed: 08/21/12
TIER 3 PHASE 3
M.P.177.00 TO
M.P.160.00
UPGRADE XINGS AND
CP'S FOR HIGH
SPEED RAIL
Rec#:
IS:
WO#:22820
MWK/
/NST/MJF

02-24-09
INSTALL MONITOR RACK
FOR XINGS
W.O. 87933 MAS

REV. 6-20-08
UPGRADED CROSSING
PROTECTION FOR THE
HIGH SPEED RAIL
PROJ. FROM MAZONIA
TO SPRINGFIELD
W.O. # 00183
REC. #15265
3-14-06 JJF
GNT/WITT/WITT/JNM

MODIFICATION LEVEL	
Q.A. LAST LEVEL CHK'D.	DA
LAST LEVEL MOD. THIS TYP.	CZ
LAST LEVEL BY DESIGNER.	DD
CHANGED FROM TYP.? Y/N	Y

CIRCUIT MODIFICATIONS ARE NOT TO BE MADE WITHOUT AUTHORITY FROM THE OFFICE OF SIGNAL DESIGN

DES: WITT.IND.
DIG: WITT.IND.
CHK: J.J.F.
A.F.E. 00183
ID= CSL17300 (14) 23X

UNION PACIFIC RAILROAD
BLOOMINGTON, ILLINOIS TO
VALLEY JCT., ILLINOIS
C.T.C. CIRCUITS
Office of AVP Engineering-Signal OMAHA NEBR.

DATE 4-1-02
SHEET (14) 23
DWG 173.00
RTE-CSL

(REV. 7-9-00) (HOUSE.TYP)

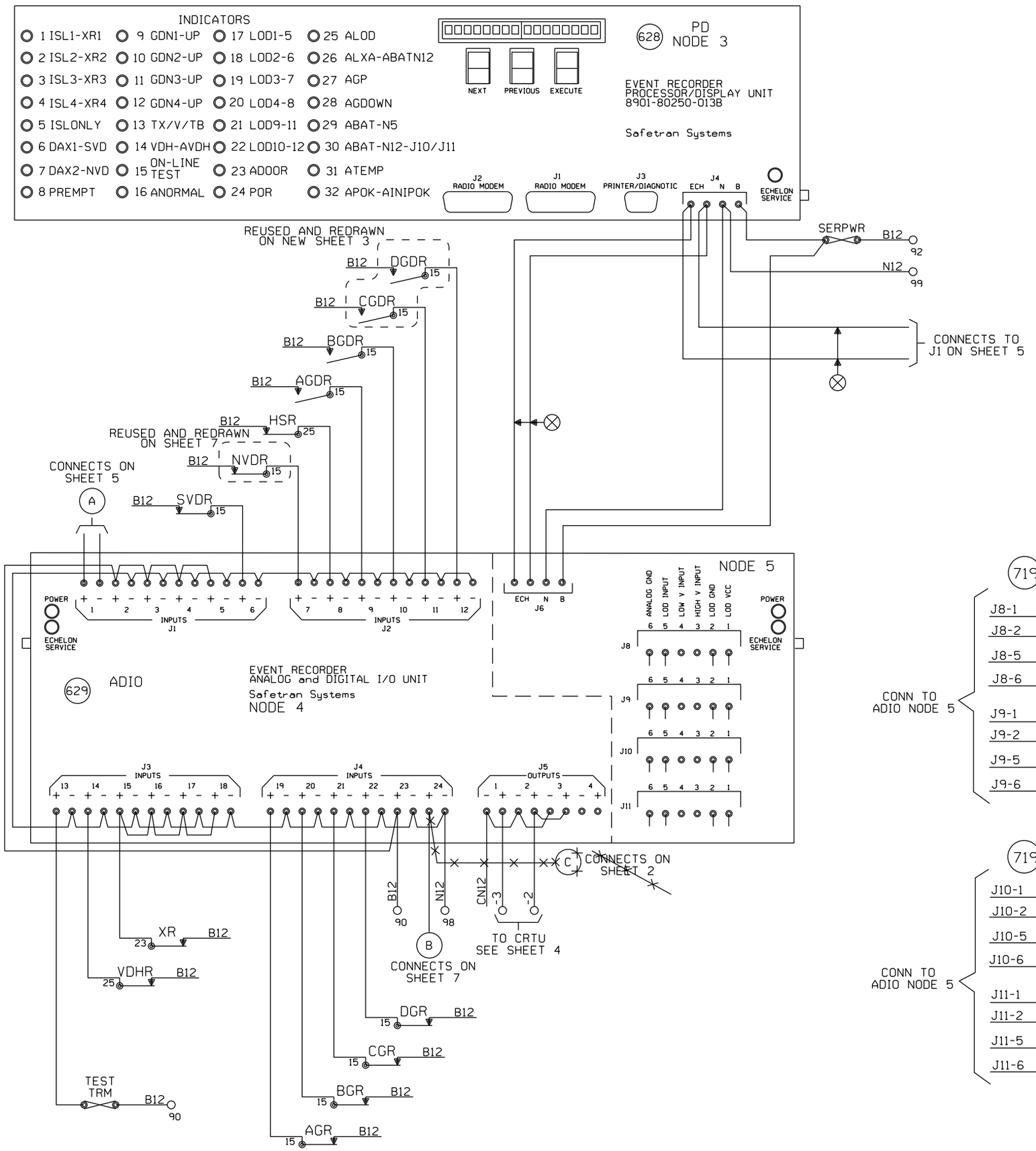

NODE #4
DIGITAL INPUTS:
1.ISL1
2.ISL2
3.ISL3
4.ISL4
5.ISONLY
6.DAX1-SVD
7.DAX2-NVD
8.PREMPT
9.GDWN1
10.GDWN2
11.GDWN3
12.GDWN4
13.TX/V/TB
14.VDH
15.XR1
16.XR2
17.XR3
18.XR4
19.GP1
20.GP2
21.GP3
22.GP4
23.POK/DO
24.POR

NODE #4
DIGITAL OUTPUTS:
J5-1 ALRM1
J5-2 ALRM2
J5-3 HEALTH
J5-4 DOORBUZ

NODE #5
ANALOG INPUTS:
J8-LOD1
J9-LOD2
J10-LOD3
J11-LOD4
NB-BATT5

GCP NODES:
6 GCP NORMAL
16 GCP STANDBY

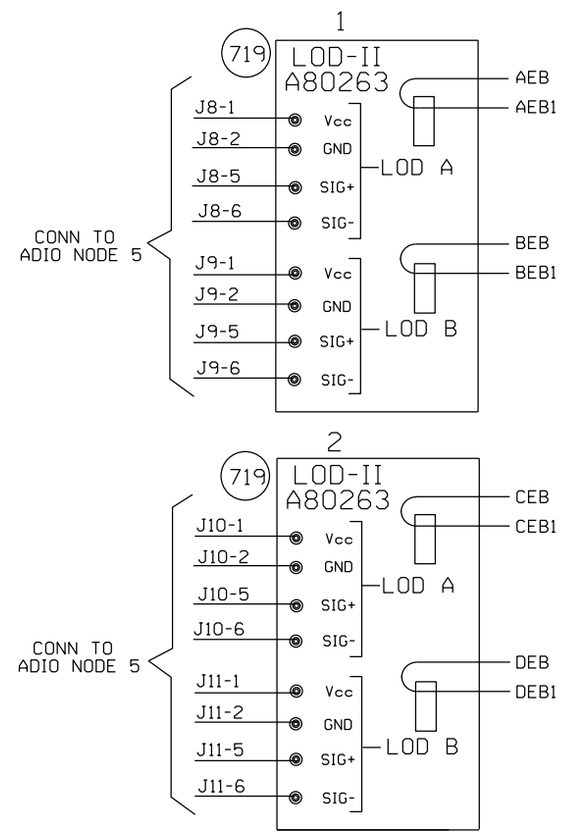

SER NOTES:
1. JUMPER ALL UNUSED DIGITAL "+" INPUTS TO THE B TERMINAL
2. JUMPER ALL UNUSED DIGITAL "-" INPUTS TO THE N TERMINAL.
3. DO NOT JUMPER INPUTS WITH DIFFERENT VOLTAGE REFERENCES TOGETHER.
4. WHEN L.E.D. #15 IS LIT THE SER IS IN TEST MODE.

⊗ = TWISTED WIRES.

TO BE VOIDED

08/21/12
W.O. 22820 NST/MJF

——— = IN
—×—×—×— = OUT

WILLIAMSVILLE, ILLINOIS
MAIN STREET
M.P. 173.00
SPRINGFIELD SUBDIVISION
D.O.T.#294 275U

02-24-09 INSTALL CONCENTRATOR RACK FOR XINGS W.O. 87933 MAS	REV. 6-20-08 UPGRADED CROSSING PROTECTION FOR THE HIGH SPEED RAIL PROJ. FROM MAZONIA TO SPRINGFIELD W.O. # 00183 REC. #15265 3-14-06 JJF GNT/WITT/WITT/JNM	MODIFICATION LEVEL: Q.A. LAST LEVEL CHK'D. DA; LAST LEVEL MOD. THIS TYP. CZ; LAST LEVEL BY DESIGNER. DD; CHANGED FROM TYP.? Y/N Y	CIRCUIT MODIFICATIONS ARE NOT TO BE MADE WITHOUT AUTHORITY FROM THE OFFICE OF SIGNAL DESIGN

DES: WITT.IND.
DIG: WITT.IND.
CHK: J.J.F.
A.F.E. 00183
ID= CSL17300.3X

UNION PACIFIC RAILROAD
BLOOMINGTON, ILLINOIS TO VALLEY JCT., ILLINOIS
C.T.C. CIRCUITS
Office of AVP Engineering-Signal OMAHA NEBR.

DATE 4-1-02
SHEET 3
DWG 173.00
RTE-CSL

(REV. 4-4-00) (SER.TYP)

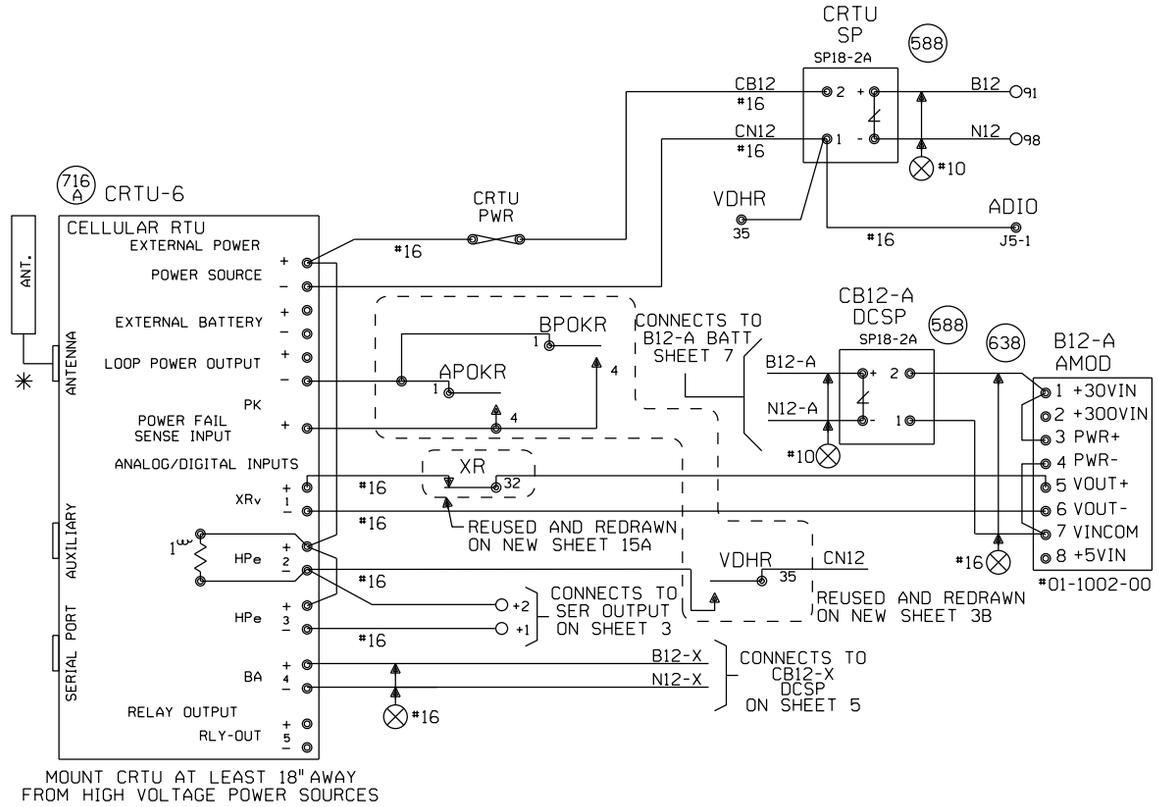

NOTES:

ALL DIODES 1N5060 OR 1N4004 UNLESS OTHERWISE NOTED.
✳ MOUNT ANTENNA ON TOP OF HOUSE.
ALL WIRES #18 UNLESS OTHERWISE NOTED.
ALL UNUSED 'NC' INPUTS MUST BE TIED HIGH TO BATTERY
ALL UNUSED ANALOG INPUTS MUST BE TIED HIGH TO BATTERY
ALL UNUSED 'NO' INPUTS MUST BE DISCONNECTED

CRTU FRONT PANEL DISPLAYCHART INDICATES NORMAL STATE

■ DIGITAL INPUT HIGH, OR POWER FAIL INPUT CLOSED
□ DIGITAL INPUT LOW, OR POWER FAIL INPUT OPEN

NORMAL STATE FOR ANALOG CHANNELS IS EQUAL TO THE STORED NOMINAL VOLTAGE +120% OR -81%

■ L ← LATCH IS SET BECAUSE CRTU DETECTED AN ALARM CONDITION
12.06V L

'sRUN MODE' 'sRUN MODE-SILENT'
CRTU RADIO IS DISABLED. REPROGRAM CRTU WITH LAPTOP.

MEASURE NOMINAL VOLTAGE ON ANALOG INPUT MODULE BETWEEN 1 +30VIN AND 7 VINCOM

ANALOG AND AC INPUT MODULES MUST BE MOUNTED LESS THAN 12" FROM THE CRTU

ANALOG MODULES CONVERT DC VOLTAGE TO A SQUARE WAVE. A WORKING ANALOG MODULE WILL HAVE 4.5VDC TO 8.0VDC BETWEEN 5VOUT+ AND 6VOUT-. WHERE, 0VOLTS = 0HZ OUT, 30VOLTS = 10KHZ OUT, AND 15VOLTS = 5KHZ OUT MAKE SURE CRTU IS PROGRAMMED WITH CALIBRATION SETTINGS.

TO BE VOIDED

08/21/12
W.O. 22820 NST/MJF

UNIT INSTALLATION AND SETUP

R.R. SITE ID WHERE; SSSS = 4 CHARACTER SUBDIVISION ID. FILL WITH PRECEDING ZEROS AS REQUIRED. THE MAIN TRACK SUBDIVISION ID# IS IN THE CURRENT TIMETABLE. INDUSTRIAL LEADS, LEASED, AND LEAD TRACKS LISTED WITHIN THE SUBDIVISION MAY HAVE THEIR OWN UNIQUE SUBDIVISION ID#. ALWAYS REFER TO CURRENT PRINTED COPY OF THE TIMETABLE.
LLLLLLLL = 8 CHARACTERS USE DOT# AT CROSSINGS, AND
WDLLLLLL = USE 'WD' THEN MP# AT WAYSIDE LOCATIONS.
EXAMPLE = 0785WD1801.5UT
HBLLLLLL = USE 'HB' THEN MP# AT HBD SITES.
EXAMPLE = 0100-HB55.62TX
THE MP# MUST USE A DECIMAL POINT TO SEPARATE NUMBERS. FILL WITH PRECEDING DASHES AS REQUIRED.
AA = 2 CHARACTER STATE NAME FOR ALL LOCATIONS. MUST BE 14 CHARACTERS LONG, NO SPACES ALLOWED.

SITE IDENTIFIER: SSSSLLLLLLLLAA	0029-294275UIL
OPERATION TO RESUME:	RUN
SIGNAL STRENGTH dBm	
CARRIER ID	
FIRMWARE VERSION	2.3.
BOOT VERSION:	
CMM VERSION:	
SERIAL NUMBER	
MIN ASSIGNMENT	
ESN: (MICROBURST ONLY)	
CONFIGURATION NET	CELLEMETRY
SILENCE INTERVAL	60 MINUTES
HEALTHCHECK INTERVAL	EVERY 2 DAYS
ALARM DEFER DELAY	240 MINUTES (4 HOURS)
SIGNAL STATUS	
SCADANET STATUS	
CALIBRATION CONSTANT CH1	
CALIBRATION CONSTANT CH2	
CALIBRATION CONSTANT CH3	
CALIBRATION CONSTANT CH4	
CALIBRATION CONSTANT PS	

FIELD PROVIDES: SAMPLED NOMINAL VOLTAGES, SCADANET STATUS CALIBRATION CONSTANTS, SERIAL NUMBER, AND SIGNAL STATUS.

CHANNEL SETUP - STANDARD CONFIGURATION 3:XRv,HPe,HPe,Ba

CHANNEL NORMAL STATE	SENSE (NO/NC)	NAME FUNCTION	RECOGNITION DELAY SECONDS ACTIVE	RECOGNITION DELAY SECONDS NORMAL	RETURN TO NORMAL	REPORTING MODE	ALARM LINKED CHANNEL	ALARM LINKED CRITERIA	EVENT LOGGING ENABLED OPTIONS
POWER FAIL (CH5) ■	POWER FAIL DETECT NO	PF1n-PK AC POWER FAIL	7,200 ALARM	300 NORMAL	ENABLED	ALERT	DISABLED	N/A	
CH1 STORED NOMINAL VOLTAGE	ANALOG INPUT N/A	CH1-XR/V XR DOWN TO LONG BATTERY LOW	1800 ALARM	1200 NORMAL	ENABLED	ALERT W/UPDATE	DISABLED	N/A	ANALOG VALUE SENT
CH2 □	DIGITAL INPUT NO	CH2-HPe LIGHT OUT GATE NOT UP/DOWN	120 ALARM	10 NORMAL	ENABLED	ALERT	DISABLED	N/A	
CH3 ■	DIGITAL INPUT NO	CH3-HPe VEHICLE DETECTOR HEALTH FAILURE	120 ALARM	10 NORMAL	ENABLED	ALERT	DISABLED	N/A	DIGITAL EVENTS
CH4 STORED NOMINAL VOLTAGE	ANALOG INPUT N/A	CH4-Ba/V BATTERY MONITOR BATTERY LOW	600 ALARM	1200 NORMAL	ENABLED	ALERT W/UPDATE	DISABLED	N/A	PF1n-PK CH2-HPe CH3-HPe
POWER SOURCE (CH6)	ANALOG INPUT N/A	PS-Ba/V BATTERY MONITOR BATTERY LOW	600 ALARM	1200 NORMAL	ENABLED	ALERT W/UPDATE	DISABLED	N/A	

ANALOG CHANNEL	USEFUL RANGE VOLTS LOW	USEFUL RANGE VOLTS HIGH	DISPLAYED RANGE VOLTS LOW	DISPLAYED RANGE VOLTS HIGH	RELATIVE ALARM POINT LOW	RELATIVE ALARM POINT HIGH	ABSOLUTE ALARM POINT LOW	ABSOLUTE ALARM POINT HIGH	AUTOMATIC UPDATE INTERVAL	STORED NOMINAL VOLTAGE	SAMPLED NOMINAL VOLTAGE
CH1	0.0	30.00	0.0	30.00	81%	120%	10.0	29.0	14 DAYS	12.69	
CH2											
CH3											
CH4	0.0	30.00	0.0	30.00	81%	120%	10.0	29.0	14 DAYS	12.69	
POWER SOURCE	0.0	30.00	0.0	30.00	81%	120%	10.0	29.0	14 DAYS	12.69	

RELAY OUTPUT	NAME	ACTIVE	NORMAL	PULSE DURATION		
	RLY-OUT	SET-UP-OPEN	CLR-DN-CLOSE		15 SECONDS	StdCfg Ver: 2.3.3 REV'D 9-20-02

MAINTENANCE OPERATIONS

TO START OR ABORT ANY PROCEDURE

1. PRESS THE 'CANCEL' BUTTON FIRST

WHEN RESPONDING TO A CALL, PUT THE CRTU IN THE 'SILENCE ALARMS' MODE

1. PRESS 'SELECT' AND THEN '+ ARROW' BUTTON UNTIL
   DISPLAY: ACTION?
   SILENCE ALARMS
2. PRESS THE 'SELECT' BUTTON TWICE
3. CORRECT PROBLEM AND SIMULATE NORMAL TRAIN MOVEMENT THROUGH THE LOCATION
4. EXAMINE EACH CHANNEL ON THE CRTU
5. PRESS THE '+/- ARROW' BUTTON
   VERIFY ALL CHANNELS INDICATE A NORMAL STATE
NORMAL STATES ARE ON THE CHANNEL SETUP CHART

CLEAR TIMERS, LATCHES AND SEND ALL NORMAL

1. DO STEPS #1 - #5 ABOVE, AND PRESS 'CANCEL'.
2. PRESS 'SELECT' AND THEN '- ARROW' BUTTON UNTIL
   DISPLAY: ACTION?
   SERVICE MODE
3. PRESS 'SELECT' AGAIN TO RESET TIMERS, AND IF
   DISPLAY: SERVICE MODE
   ALL NORMAL
4. PRESS 'SELECT' AGAIN TO CLEAR LATCHES, AND SEND ALL NORMAL. SKIP STEPS #5-#6.
5. HOWEVER, IF ALARMS ARE NOT CLEARED:
   DISPLAY: SERVICE MODE
   ALARMS PENDING/PRESENT
6. PRESS 'CANCEL', CORRECT PROBLEM AND REPEAT STEPS #2 THRU #5 UNTIL ALL NORMAL SENT.

TO CANCEL THE 'SILENCE ALARMS' MODE

1. PRESS 'SELECT' AND THEN '+ ARROW' BUTTON UNTIL
   DISPLAY: ACTION?
   CANCEL SILENCE
2. PRESS THE 'SELECT' BUTTON AGAIN

EXAMINE & SET BATTERY VOLTAGE NOMINAL VALUE

1. PRESS THE '+ ARROW' OR '- ARROW' BUTTON UNTIL THE DESIRED CHANNEL IS DISPLAYED.
   DISPLAY: PS-Ba:
   13.83V NORMAL
2. VERIFY THE DISPLAYED READING WITH A DIGITAL VOLTMETER
3. PRESS THE 'SELECT' BUTTON, AND THE CRTU DISPLAY WILL SWITCH BETWEEN CURRENT/SAVED NOMINAL VOLTAGE VALUES.
   DISPLAY: NOMINAL ON #6? (CURRENT)
   13.83
   DISPLAY: SAVED NOMINAL 6 (STORED)
   12.69
4. PRESS THE 'SELECT' BUTTON AND THE CURRENT OR 'NOMINAL ON' VALUE WILL BE SAMPLED AND STORED AS THE 'SAVED NOMINAL' VALUE
5. VERIFY THE 'NOMINAL ON' AND 'SAVED NOMINAL' VALUES ARE EQUIVALENT, REPEAT STEPS #1 THRU #3 & PRESS THE 'CANCEL' BUTTON.

WILLIAMSVILLE, ILLINOIS
MAIN STREET
M.P. 173.00
SPRINGFIELD SUBDIVISION
D.O.T.#294 275U

REV. 6-20-08
UPGRADED CROSSING PROTECTION FOR THE HIGH SPEED RAIL PROJ. FROM MAZONIA TO SPRINGFIELD
W.O. # 00183
REC. #15265
3-14-06 JJF
GNT/WITT/WITT/JNM

MODIFICATION LEVEL	
Q.A. LAST LEVEL CHK'D.	DA
LAST LEVEL MOD. THIS TYP.	CZ
LAST LEVEL BY DESIGNER.	DD
CHANGED FROM TYP.? Y/N	Y

CIRCUIT MODIFICATIONS ARE NOT TO BE MADE WITHOUT AUTHORITY FROM THE OFFICE OF SIGNAL DESIGN

DES: WITT.IND.
DIG: WITT.IND.
CHK: J.J.F.
A.F.E. 00183
ID= CSL17300.4X

UNION PACIFIC RAILROAD
BLOOMINGTON, ILLINOIS TO VALLEY JCT., ILLINOIS
C.T.C. CIRCUITS
Office of AVP Engineering-Signal OMAHA NEBR.

DATE 4-1-02
SHEET 4
DWG 173.00
RTE-CSL

EGMS
PROGRAM INFORMATION

PROGRAM VERSION 2.1

EGMS PARAMETERS

PARAMETER	DEFAULT
PRIMARY MODE	DYNAMIC
SECONDARY MODE	TIMED
DIS ENTR DETS	NO
DELAY ON DOWN	01.0
REV DET ENABLE	NO
DYNAMIC EGCT	000
TIMED EGCT	012
XR DET DISABLE	YES
BIDIR DELAY	04.0
ENTRANCE DOWN REQ	YES
EXIT UP REQ	NO
ISL 2 ENABLE	NO
GATO ALARM DELAY	000
GATO GATE DELAY	005

NOTES

1. EGMS ISL1 INPUT: "AND" ISLAND INPUTS FROM ALL TRACKS. NOTE THAT WHEN THIS INPUT IS DE-ENERGIZED THE XR INPUT ON TB2, 15 & 16 MUST ALSO BE DE-ENERGIZED BEFORE THE EXIT GATES MAY BE DRIVEN DOWN.
2. EGMS ISL2 INPUT: MAY BE USED FOR STAND ALONE ISLAND INPUT. THIS INPUT IS NOT DEPENDENT UPON THE STATUS OF XR INPUT ON TB2, 15 & 16. THIS INPUT MUST BE FIELD SELECTED AND ENABLED DURING EGMS SETUP.
3. ALL WIRING TO EGMS TO BE #16 AWG FLEX.

GATE PARAMETERS

GATE	1	2	3	4	5	6	7	8
GATE TYPE	ENTRANCE	ENTRANCE	EXIT	EXIT	NONE•	NONE•	NONE•	NONE•
GATE DIRECTION	SOUTH	NORTH	SOUTH	NORTH	S/N	S/N	S/N	S/N
VERTICAL CHATTER TIME	00.0	00.0	00.0	00.0	00.0	00.0	00.0	00.0
HORIZONTAL CHATTER TIME	01.0	01.0	01.0	01.0	01.0	01.0	01.0	01.0
MAXIMUM ASCENT TIME	025	025	025	025	025	025	025	025
MAXIMUM DESCENT TIME	025	025	025	025	025	025	025	025

• GATE TYPE = "NONE" ALL OTHER PARAMETERS IGNORED

DETECTOR PARAMETERS

	(1) E-1400				(2) E-1400				(3) E-1400				(4) E-1400			
DETECTOR	1	2	3	4	5	6	7	8	9	10	11	12	13	14	15	16
DETECTOR TYPE	ENTR	ENTR	EXIT	EXIT	NONE	NONE	NONE	NONE	NONE	NONE	NONE	NONE	NONE	NONE	NONE	NONE
DETECTOR DIRECTION	S	N	S	N	S/N	S/N	S/N	S/N	S/N	S/N	S/N	S/N	S/N	S/N	S/N	S/N
STRETCH TIME•	01.0	01.0	01.0	01.0	01.0	01.0	01.0	01.0	01.0	01.0	01.0	01.0	01.0	01.0	01.0	01.0

• INCREASE STRETCH TIME AS NECESSARY TO MAINTAIN VEHICLE DETECTION FROM LOOP TO LOOP.
•• DETECTORS 5 - 16 DEFAULT TO "NONE" AND MUST BE CONFIGURED MANUALLY

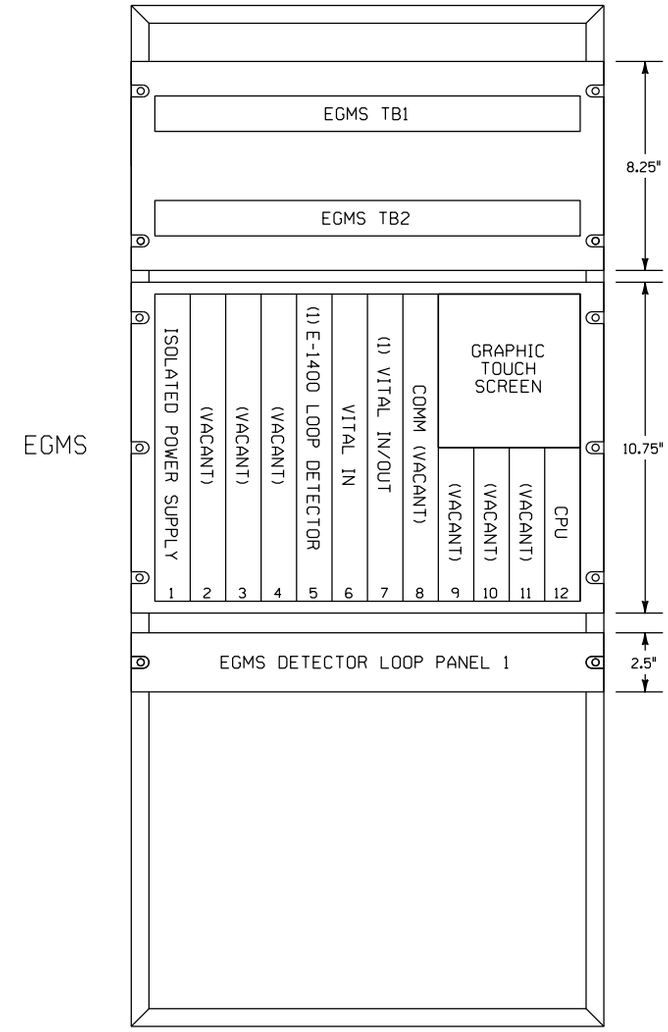

NOTES

1. E-1400 LOOP DETECTOR MODULES AND EGMS DETECTOR LOOP PANELS MAY BE REMOVED AS REQUIRED.

(1) E-1400 SETUP PARAMETERS

FUNCTION	CH. 1	CH. 2	CH. 3	CH. 4
FREQUENCY SETTING	2	4	6	8
SENSITIVIY SETTING	6•	6•	6•	6•
OPTION 1 (TEMP L DISPLAY)	OFF			
OPTION 2 (TEMP ΔL/L DISPLAY)	OFF			
OPTION 3 (NOISE FILTER)	3.00	3.00	3.00	3.00
OPTION 4 (TRACKING)	4.02	4.02	4.02	4.02
OPTION 5 (SENSITIVITY BOOST)	5.00	5.00	5.00	5.00
OPTION 6 (TEMP AUDIBLE SIGNAL)	OFF	OFF	OFF	OFF
CHECKLOOP INTERVAL	005	005	005	005
DETECTOR ID	000			
OPTION 7 (DETECTOR SYNC)	7.00			
OPTION 8 (ISL OPTION)	OFF			
OPTION 9 (SHUNT ENHANCEMENT SE)	OFF	OFF	OFF	OFF
MAIN VITAL OUTPUT DELAY	00.0	00.0	00.0	00.0
MAIN VITAL OUTPUT EXTENSION	00.0	00.0	00.0	00.0
MAIN VITAL OUTPUT MAPPING	10	20	40	80
AUX VITAL OUTPUT MAPPING	001	002	004	008
LOOP FREQUENCY (Khz)				
LOOP INDUCTANCE (MICRO HENRIES)				

SOFTWARE VERSION ___.__
• FIELD VERIFY
•• OPTION #8, #9 ONLY AVAILABLE W/ E-1400 SOFTWARE VERSION 4.0 AND HIGHER

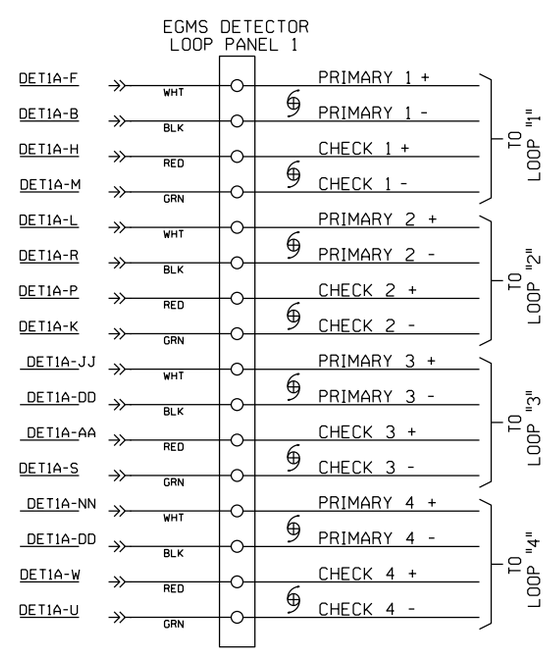

TO BE VOIDED

08/21/12
W.O. 22820 NST/MJF

WILLIAMSVILLE, ILLINOIS
MAIN STREET
M.P. 173.00
SPRINGFIELD SUBDIVISION
D.O.T.#294 275U

REV. 6-20-08
UPGRADED CROSSING PROTECTION FOR THE HIGH SPEED RAIL PROJ. FROM MAZONIA TO SPRINGFIELD
W.O. # 00183
REC. #15265
3-14-06 JJF
GNT/WITT/WITT/JNM

CIRCUIT MODIFICATIONS ARE NOT TO BE MADE WITHOUT AUTHORITY FROM THE OFFICE OF SIGNAL DESIGN

DES: WITT.IND.
DIG: WITT.IND.
CHK: J.J.F.
A.F.E. 00183
ID= CSL17300.9X

UNION PACIFIC RAILROAD
BLOOMINGTON, ILLINOIS TO VALLEY JCT., ILLINOIS
C.T.C. CIRCUITS
Office of AVP Engineering-Signal OMAHA NEBR.

DATE 6-20-08
SHEET 9
DWG 173.00
RTE-CSL

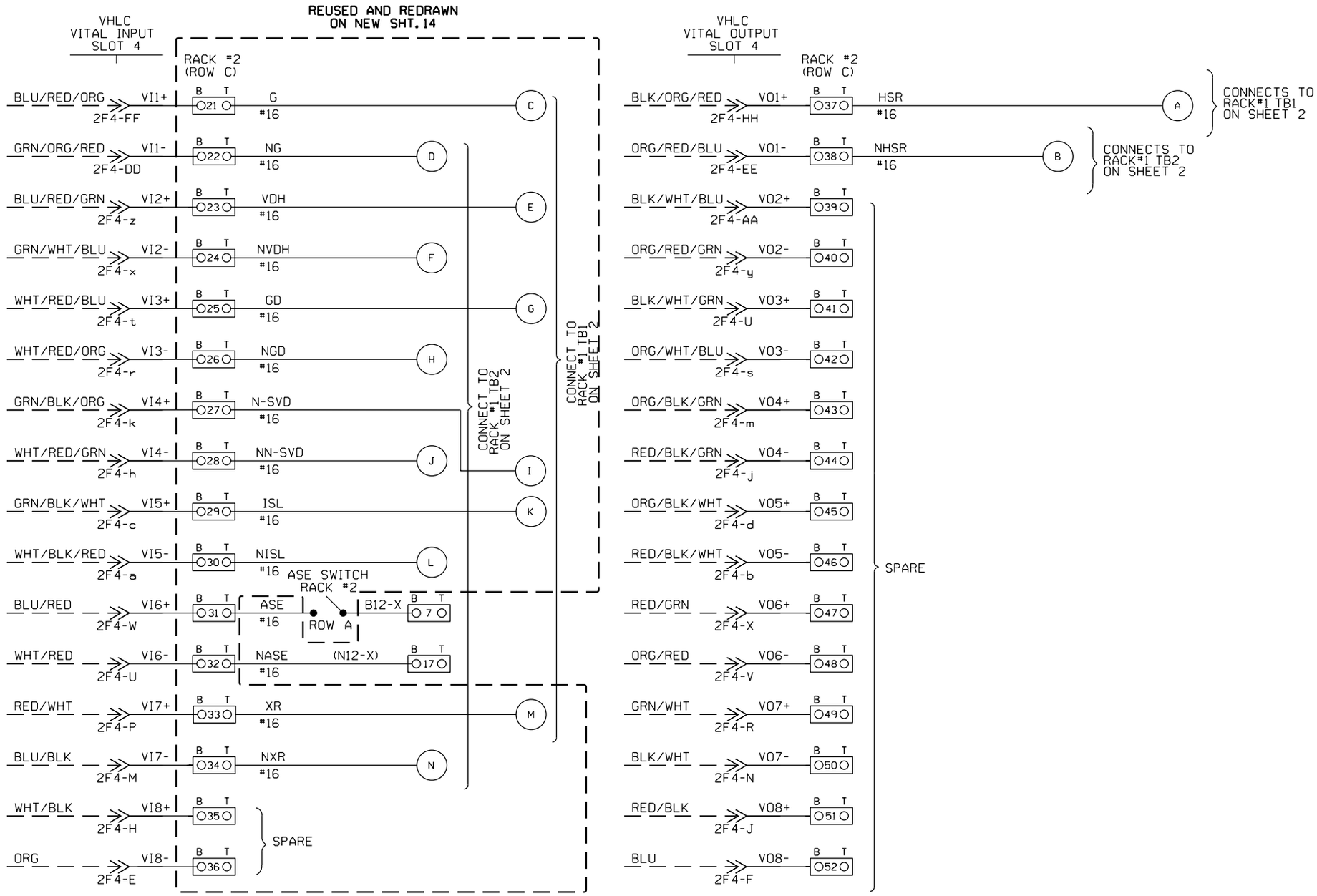

TO BE VOIDED

08/21/12
W.O. 22820 NST/MJF

NOTES:

1. INPUT WIRES, OUTPUT WIRES POWER WIRES, PUT IN SEPARATE BUNDLES.
2. ALL WIRES #16 UNLESS NOTED.

-O??O- 2 POSITION WAGO BLOCK.

NEW SHEET

							02-24-09 INSTALL CONCENTRATOR RACK FOR XINGS W.O. 87933 MAS	CIRCUIT MODIFICATIONS ARE NOT TO BE MADE WITHOUT AUTHORITY FROM THE OFFICE OF SIGNAL DESIGN	Date: 09-25-08 Des: CRK Chk: AFE: 87933	UNION PACIFIC RAILROAD WILLIAMSVILLE, ILLINOIS MAIN STREET SPRINGFIELD SUBDIVISION Office of AVP Engineering-Signal Omaha, Nebraska	Sh.: 9A DOT 294275U MP: 173.00 ID: CSL17300.9AX

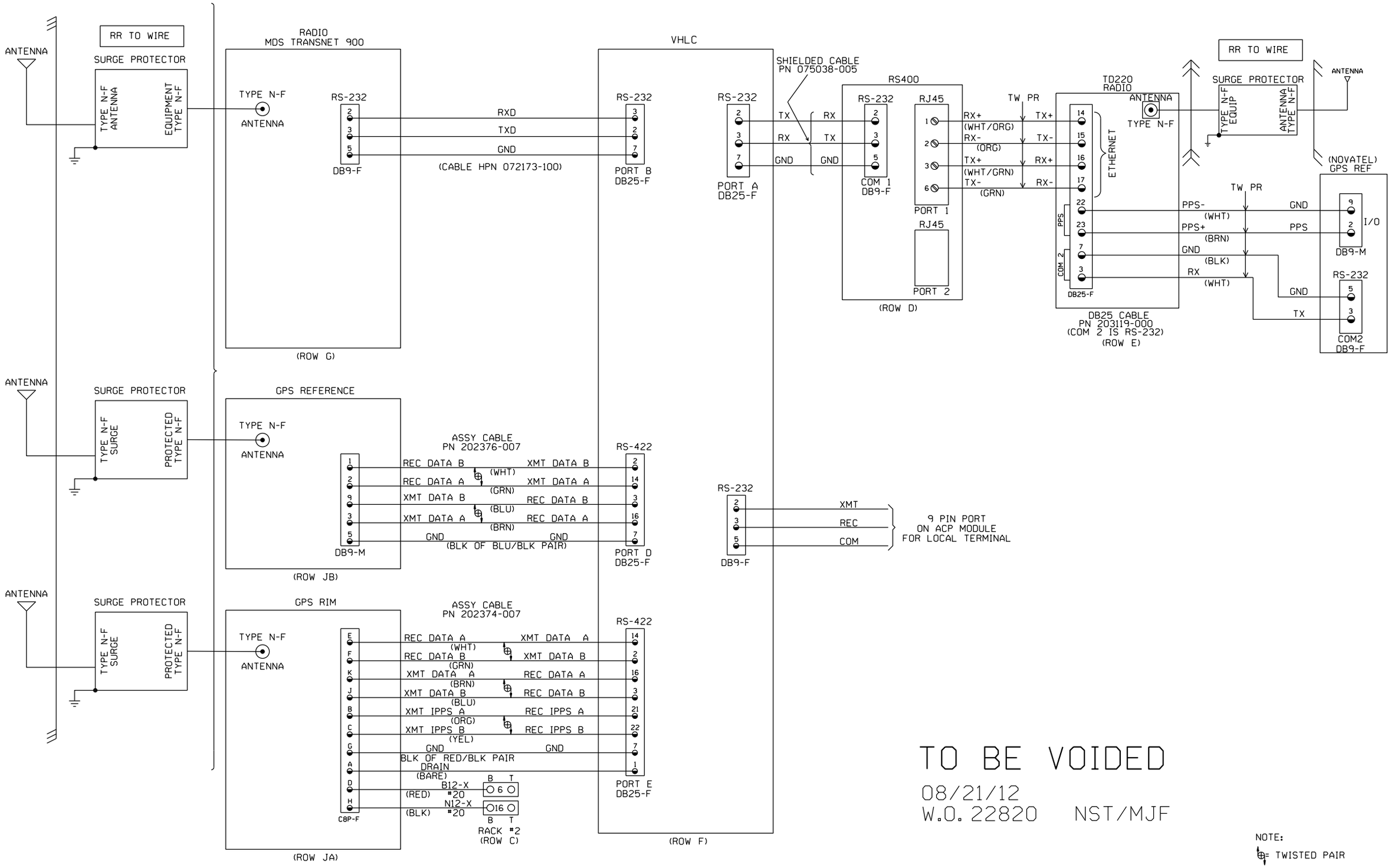

TO BE VOIDED

08/21/12
W.O. 22820 NST/MJF

NOTE:
= TWISTED PAIR

NEW SHEET

							02-24-09 INSTALL CONCENTRATOR RACK FOR XINGS W.O. 87933 MAS	CIRCUIT MODIFICATIONS ARE NOT TO BE MADE WITHOUT AUTHORITY FROM THE OFFICE OF SIGNAL DESIGN	Date: 09-25-08	UNION PACIFIC RAILROAD	Sh.: 9B
									Des: CRK	WILLIAMSVILLE, ILLINOIS	DOT 294275U
									Chk:	MAIN STREET	MP: 173.00
									AFE: 87933	SPRINGFIELD SUBDIVISION	ID: CSL17300.9BX
										Office of AVP Engineering-Signal Omaha, Nebraska	

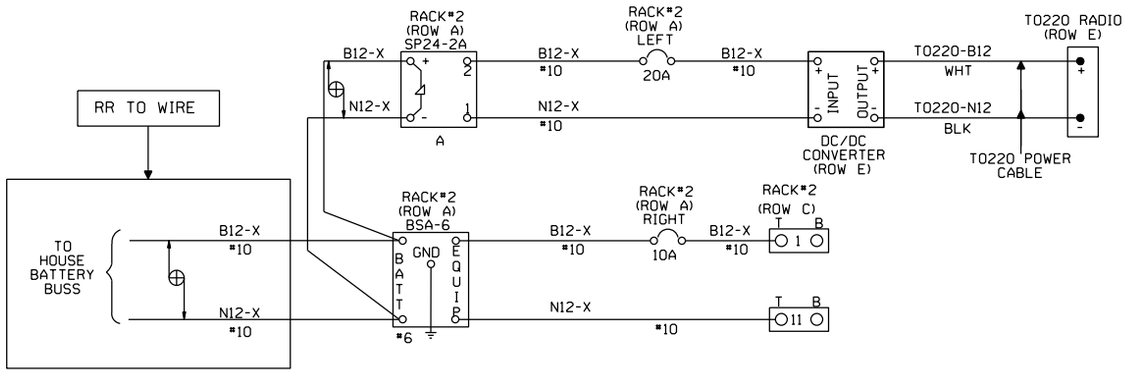

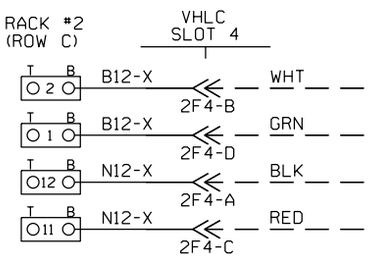

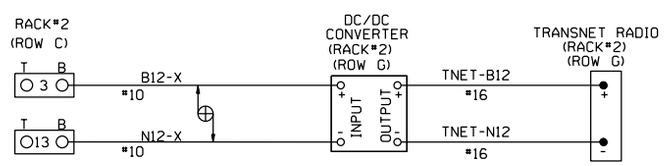

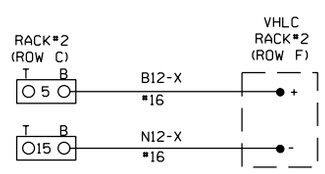

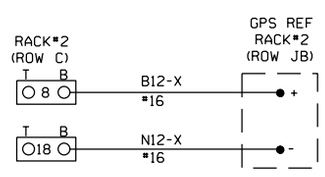

TO BE VOIDED

08/21/12
W.O. 22820 NST/MJF

NOTES:

DENOTES TWISTED PAIR

O?? O 2 POSITION WAGO BLOCK

NEW SHEET

							02-24-09 INSTALL CONCENTRATOR RACK FOR XINGS W.O. 87933 MAS	CIRCUIT MODIFICATIONS ARE NOT TO BE MADE WITHOUT AUTHORITY FROM THE OFFICE OF SIGNAL DESIGN	Date: 09-25-08 Des: CRK Chk: AFE: 87933	UNION PACIFIC RAILROAD WILLIAMSVILLE, ILLINOIS MAIN STREET SPRINGFIELD SUBDIVISION Office of AVP Engineering-Signal Omaha, Nebraska	Sh.: 9C DOT 294275U MP: 173.00 ID: CSL17300.9CX

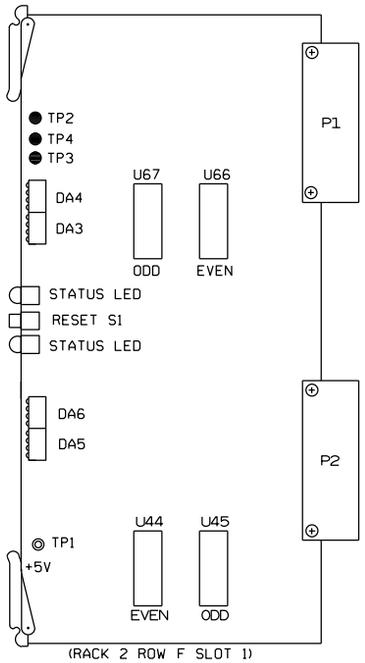

VITAL LOGIC PROCESSOR

202546-007

EXEC V.4.15

U44 CKSUM 31E2 U66 CKSUM ED13

U45 CKSUM CAC1 U67 CKSUM 4E3E

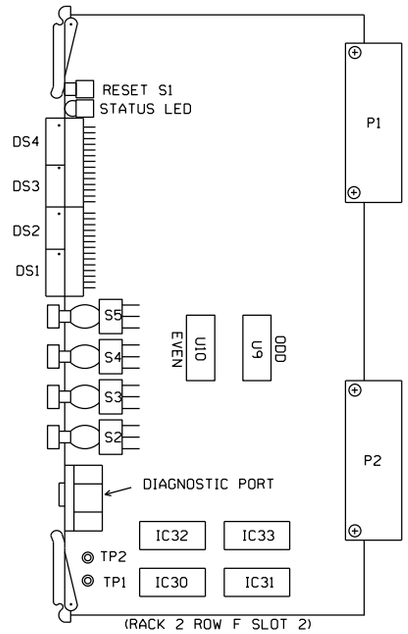

AUXILIARY COMMUNICATIONS PROCESSOR

GENYSIS V.2.3

202636-003

IC32 CKSUM CC63 IC33 CKSUM 3416

IC30 CKSUM 27C1 IC31 CKSUM A9B1

U9 CKSUM ____ U10 CKSUM ____

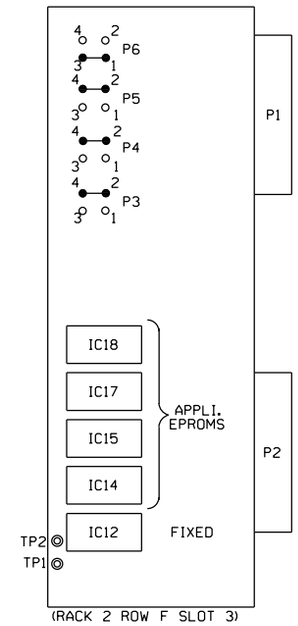

SITE SPECIFIC MODULE

GENYSIS V.2.3

CKSUM ____

IC15 CKSUM ____

IC17 CKSUM ____

IC18 CKSUM ____

SITE SPECIFIC MODULE JUMPER LOCATIONS SLOT F3

	EPROM	P3	P4	P5	P6
	27C64	1-3	1-3	1-3	1-3
	27C128	1-3	1-3	1-3	1-3
	27C256	2-4	1-3	1-3	1-3
	27C512	2-4	2-4	1-3	1-3
■	27C010	2-4	2-4	2-4	1-3

CHASSIS ID 06C2 HEX

LSB MSB

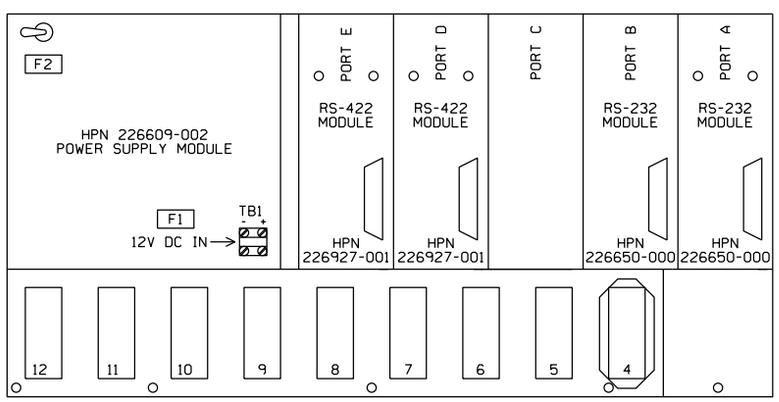

VITAL HARMON LOGIC CONTROLLER (REAR VIEW)

TO BE VOIDED

08/21/12

W.O. 22820 NST/MJF

NEW SHEET

							02-24-09 INSTALL CONCENTRATOR RACK FOR XINGS W.O. 87933 MAS	CIRCUIT MODIFICATIONS ARE NOT TO BE MADE WITHOUT AUTHORITY FROM THE OFFICE OF SIGNAL DESIGN	Date: 09-25-08 Des: CRK Chk: AFE: 87933	UNION PACIFIC RAILROAD WILLIAMSVILLE, ILLINOIS MAIN STREET SPRINGFIELD SUBDIVISION Office of AVP Engineering-Signal Omaha, Nebraska	Sh.: 9D DOT 294275U MP: 173.00 ID: CSL17300.9DX

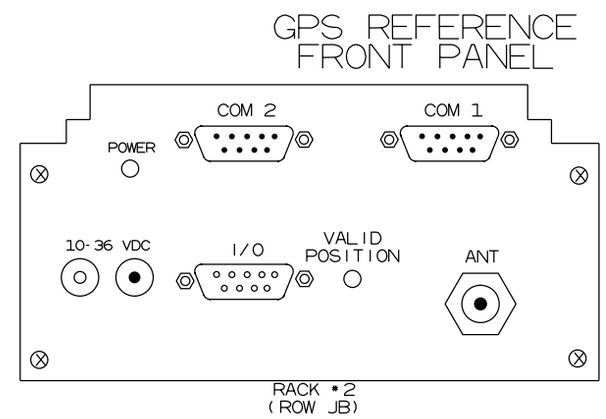

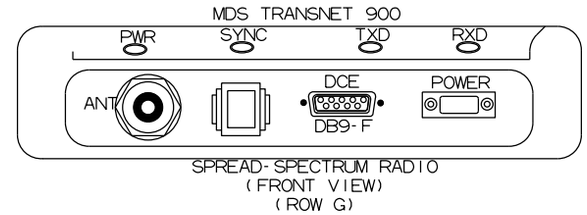

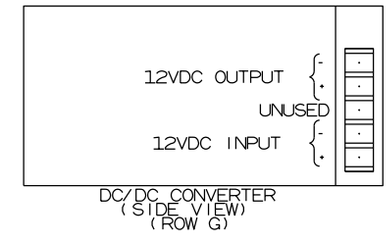

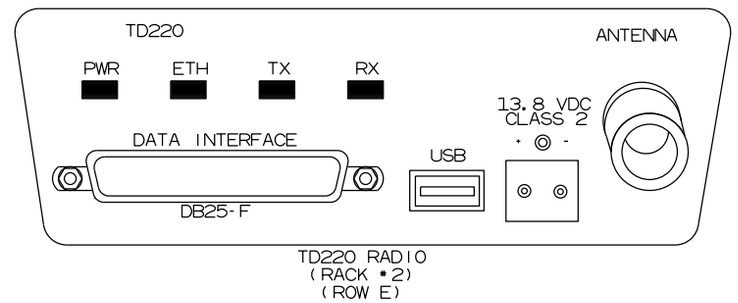

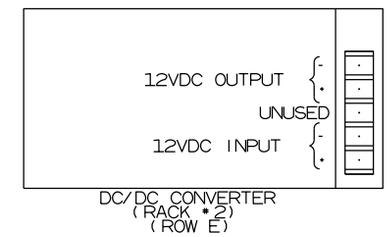

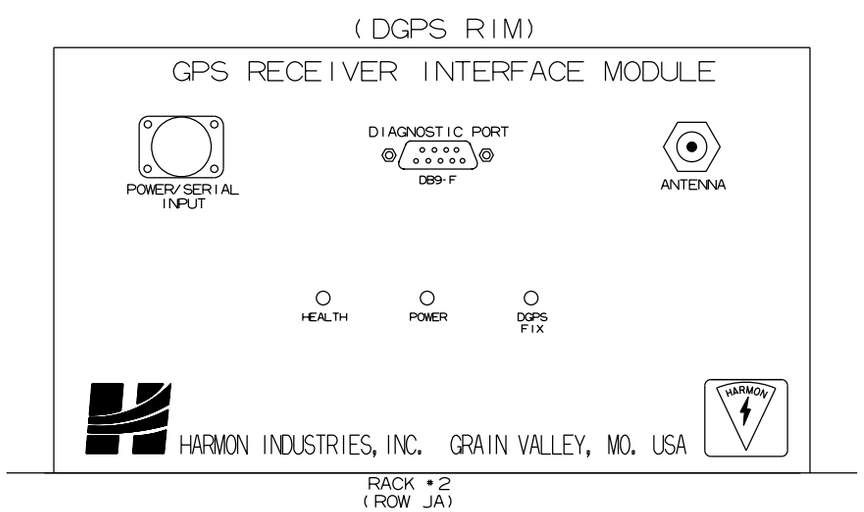

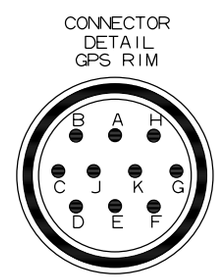

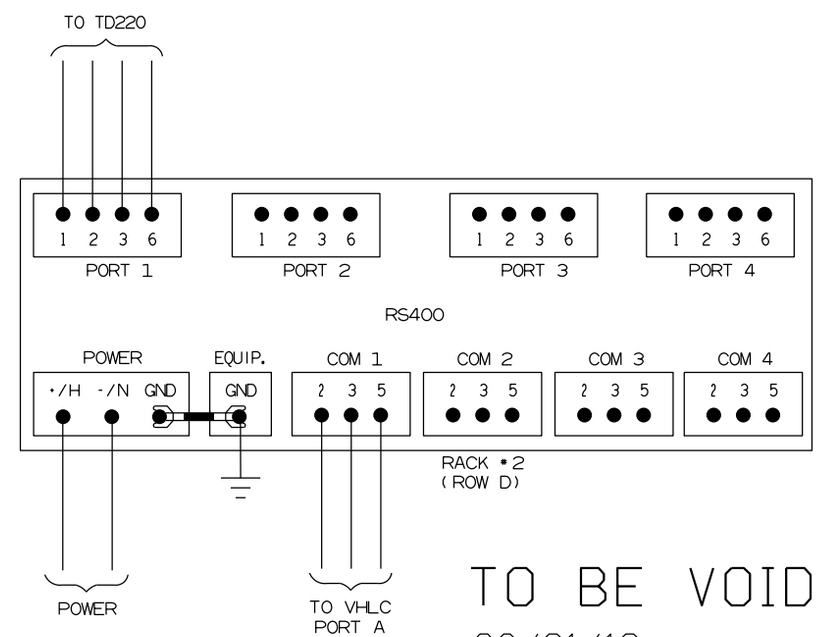

TO BE VOIDED

08/21/12
W.O. 22820 NST/MJF

NEW SHEET

							02-24-09 INSTALL CONCENTRATOR RACK FOR XINGS W.O. 87933 MAS	CIRCUIT MODIFICATIONS ARE NOT TO BE MADE WITHOUT AUTHORITY FROM THE OFFICE OF SIGNAL DESIGN	Date: 09-25-08 Des: CRK Chk: AFE: 87933	UNION PACIFIC RAILROAD WILLIAMSVILLE, ILLINOIS MAIN STREET SPRINGFIELD SUBDIVISION Office of AVP Engineering-Signal Omaha, Nebraska	Sh.: 9E DOT 294275U MP: 173.00 ID: CSL17300.9EX

REUSED AND REDRAWN ON NEW SHT.14F

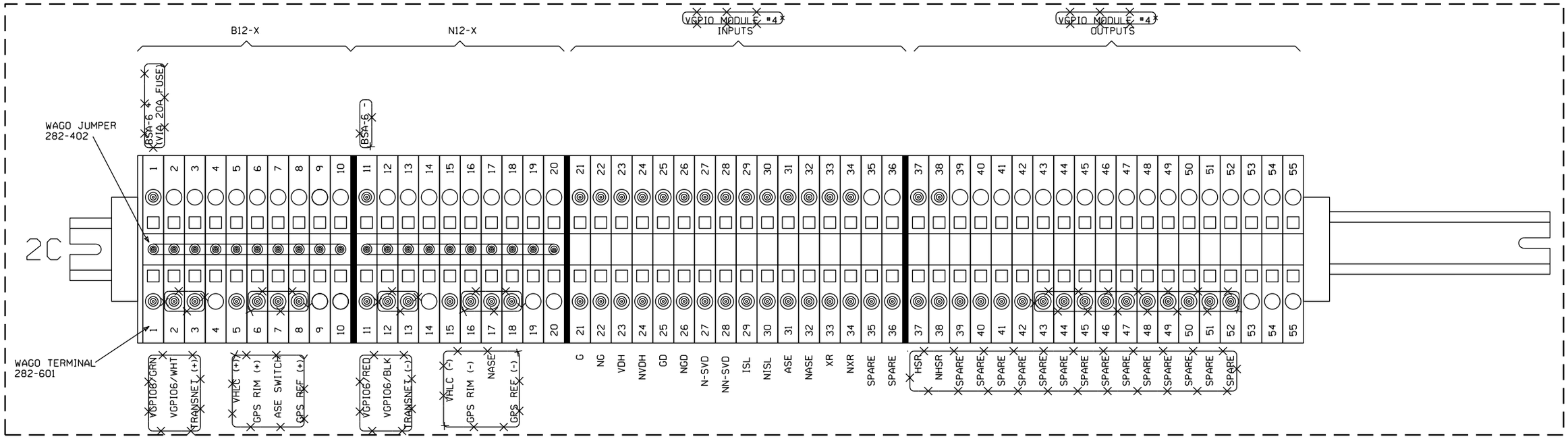

REUSED AND REDRAWN ON NEW SHT.14E

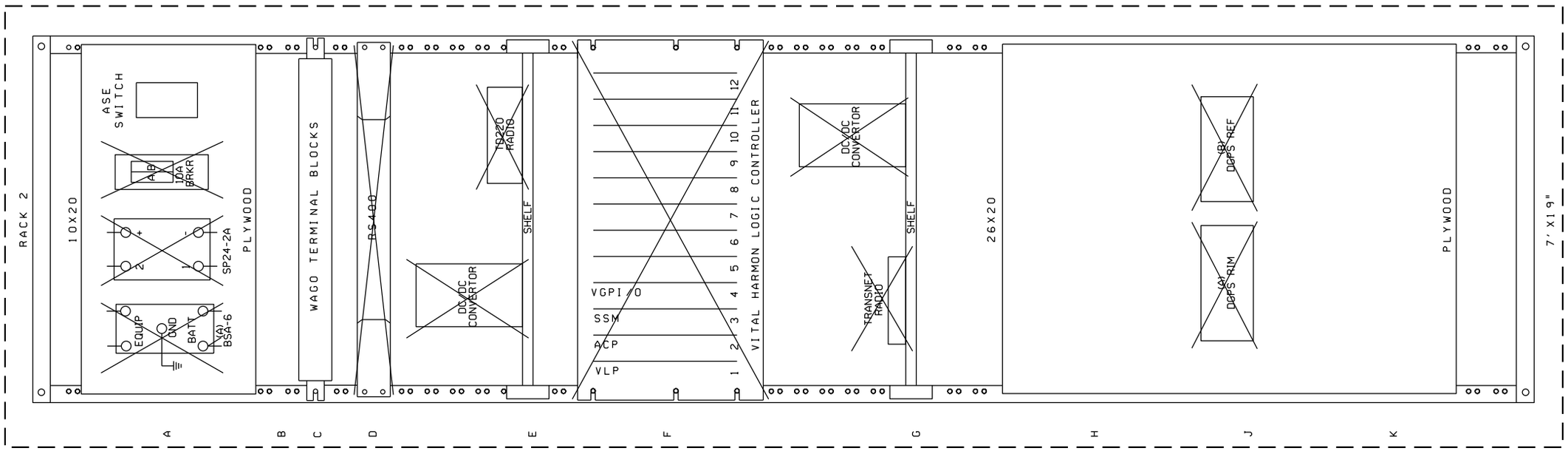

TO BE VOIDED

08/21/12
W.O. 22820 NST/MJF

NEW SHEET

02-24-09 INSTALL CONCENTRATOR RACK FOR XINGS W.O. 87933 MAS	CIRCUIT MODIFICATIONS ARE NOT TO BE MADE WITHOUT AUTHORITY FROM THE OFFICE OF SIGNAL DESIGN	Date: 09-25-08 Des: CRK Chk: AFE: 87933	**UNION PACIFIC RAILROAD** WILLIAMSVILLE, ILLINOIS MAIN STREET SPRINGFIELD SUBDIVISION Office of AVP Engineering-Signal Omaha, Nebraska

Sh.:	9F
DOT	294275U
MP:	173.00
ID:	CSL17300.9FX