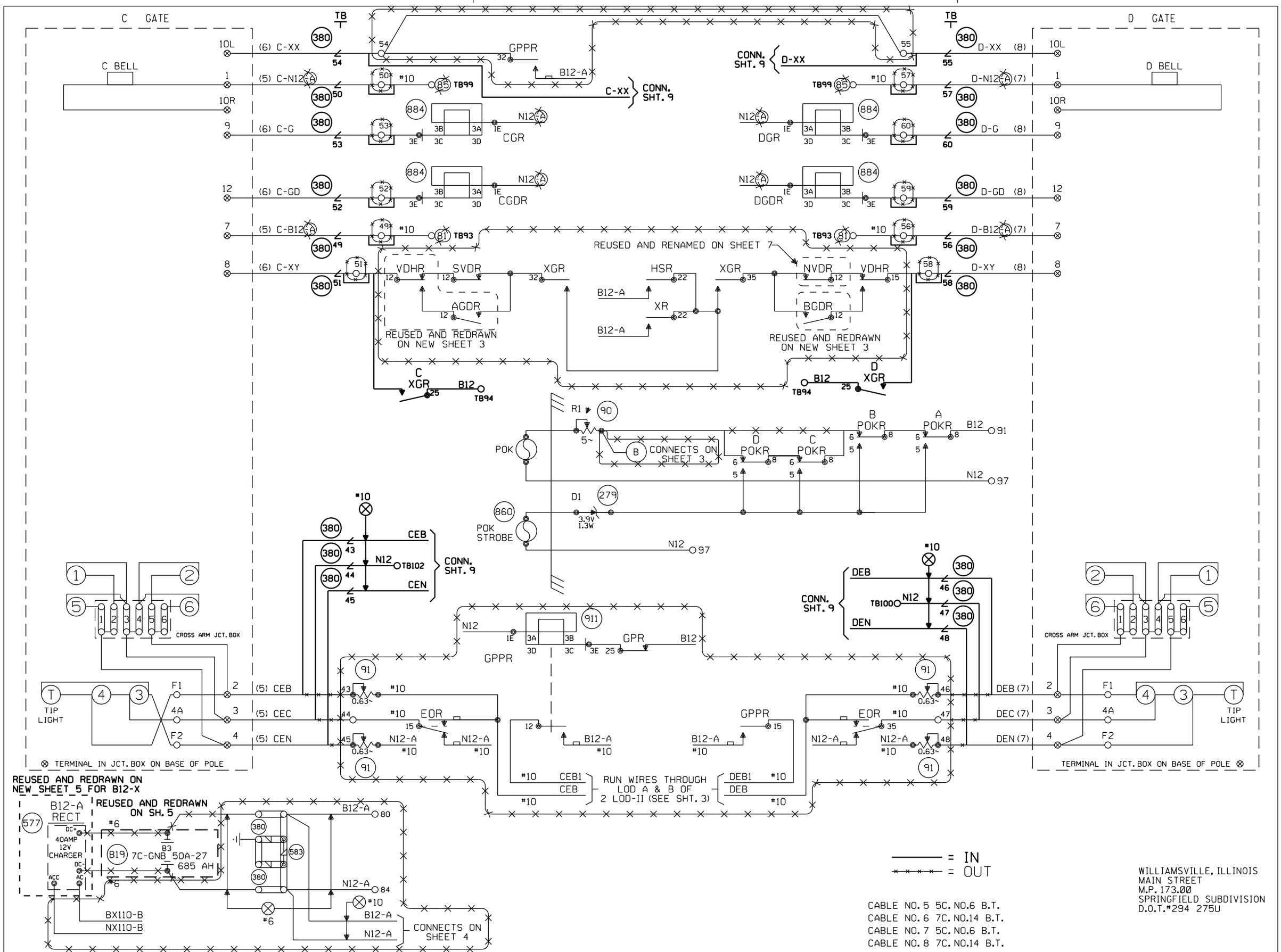

Designed: 08/21/12
TIER 3 PHASE 3
M.P.177.00 TO
M.P.160.00
UPGRADE XINGS AND
CP'S FOR HIGH
SPEED RAIL
Rec#: WO#:22820
IS: MWK/
/NST/MJF

REV. 6-20-08
UPGRADED CROSSING
PROTECTION FOR THE
HIGH SPEED RAIL
PROJ. FROM MAZONIA
TO SPRINGFIELD
W.O. # 00183
REC. #15265
3-14-06 JJF
GNT/WITT/WITT/JNM

MODIFICATION LEVEL	
Q.A. LAST LEVEL CHK'D.	DA
LAST LEVEL MOD. THIS TYP.	CZ
LAST LEVEL BY DESIGNER.	DD
CHANGED FROM TYP.? Y/N	Y

CIRCUIT MODIFICATIONS ARE NOT TO BE MADE WITHOUT AUTHORITY FROM THE OFFICE OF SIGNAL DESIGN

DES: WITT.IND.
DIG: WITT.IND.
CHK: J.J.F.
A.F.E. 00183
ID= CSL17300.7X
8X

UNION PACIFIC RAILROAD
BLOOMINGTON, ILLINOIS TO
VALLEY JCT., ILLINOIS
C.T.C. CIRCUITS
Office of AVP Engineering-Signal OMAHA NEBR.

DATE 4-1-02
SHEET ~~7~~ 8
DWG 173.00
RTE-CSL

(REV. 7-9-00) (4GTYP.6)

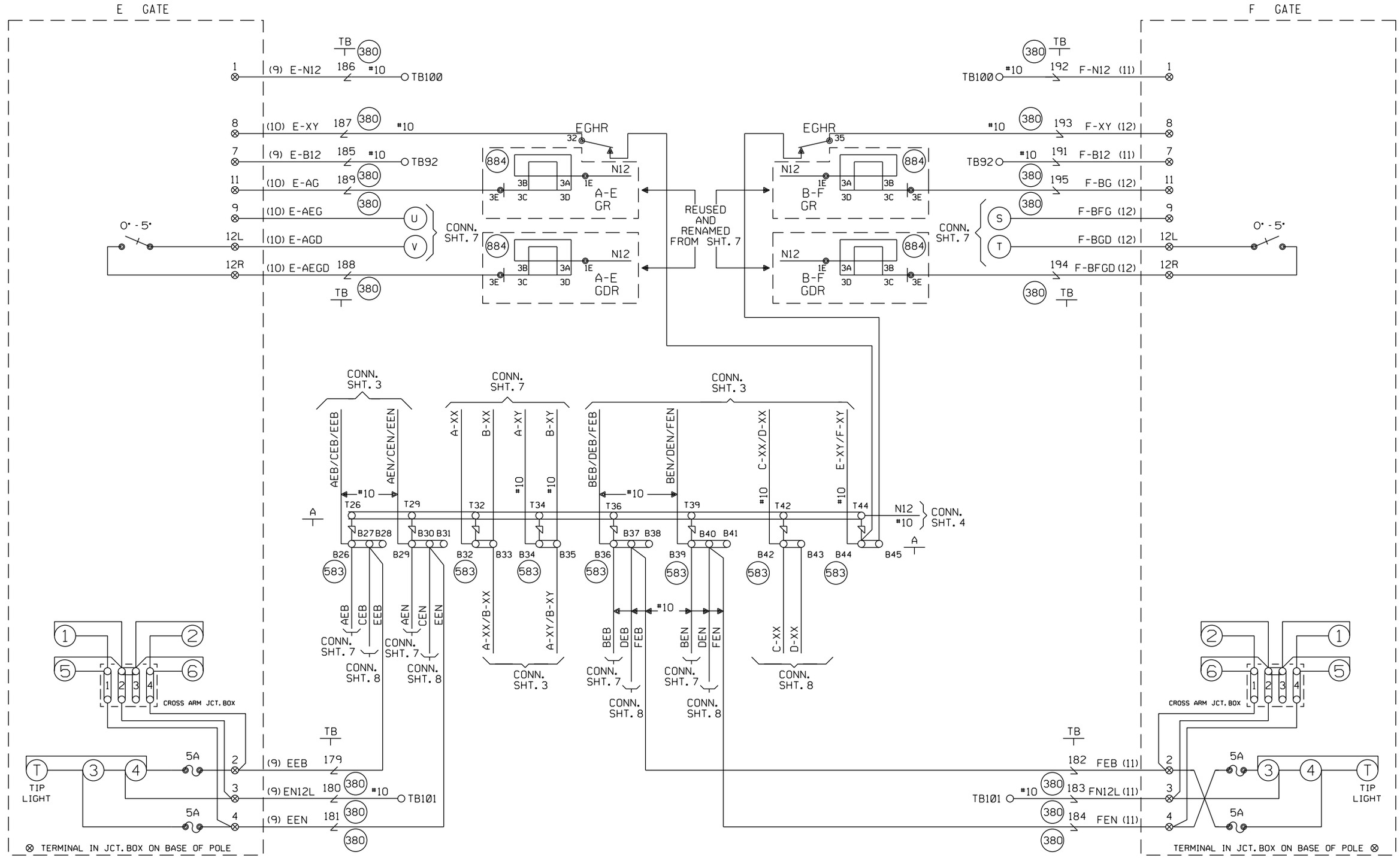

CABLE TABULATION

CABLE NO. 9 5C. NO.6 U.G.B.T. TO GATE E
CABLE NO. 10 7C. NO.14 U.G.B.T. TO GATE E
CABLE NO. 11 5C. NO.6 U.G.B.T. TO GATE F
CABLE NO. 12 7C. NO.14 U.G.B.T. TO GATE F

NEW SHEET

					Designed: 08/21/12 TIER 3 PHASE 3 M.P.177.00 TO M.P.160.00 UPGRADE XINGS AND CP'S FOR HIGH SPEED RAIL Rec#: WO#: 22820 IS: MWK/ / /NST/MJF	MODIFICATION LEVEL Q. A. LAST LEVEL CHECKED DU LAST LEVEL MOD THIS TYPICAL DU LAST LEVEL BY DESIGNER DU CHANGED FROM TYPICAL? Y REV 01.24.11 4K 4GFTYP.6	CIRCUIT MODIFICATIONS ARE NOT TO BE MADE WITHOUT AUTHORITY FROM THE OFFICE OF SIGNAL DESIGN	Date: 08/21/12 Des: NST Chk: MWK AFE: 22820	UNION PACIFIC RAILROAD WILLIAMSVILLE, ILLINOIS MAIN STREET SPRINGFIELD SUBDIVISION Office of AVP Engineering - Signal Omaha, Nebraska	Sh.: 9 DOT 294275U MP: 173.02 ID: CSL17302.9X

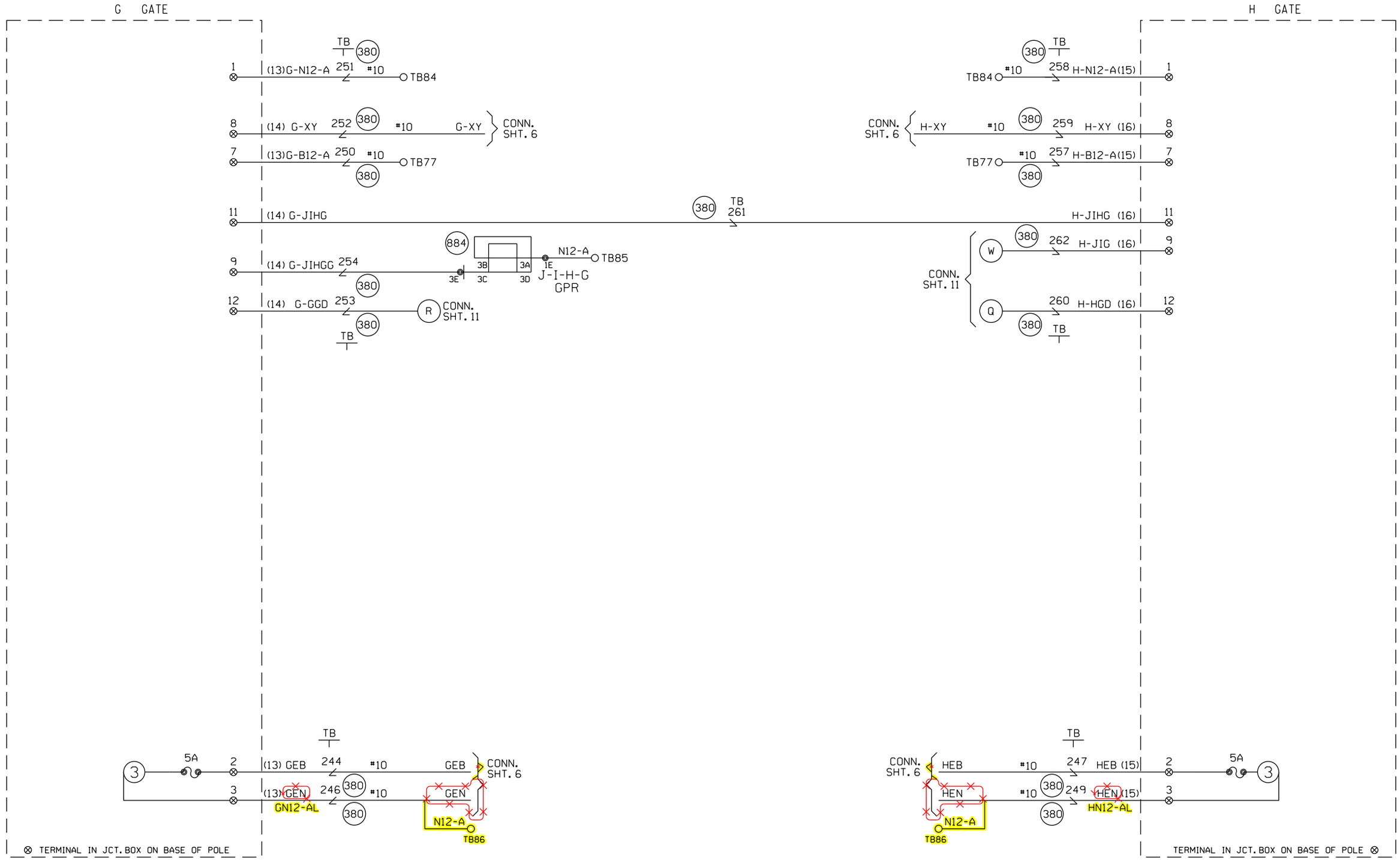

= IN
= OUT

CABLE TABULATION

CABLE NO. 13 5C. NO.6 U.G.B.T. TO GATE G
CABLE NO. 14 7C. NO.14 U.G.B.T. TO GATE G
CABLE NO. 15 5C. NO.6 U.G.B.T. TO GATE H
CABLE NO. 16 7C. NO.14 U.G.B.T. TO GATE H

~~NEW SHEET~~

Designed: 2/25/15
TIER 3 PHASE 3
M.P.177.00 TO
M.P.160.00
HSR SCOPE CHANGE
Rec#: WO#:22820
IS: MWK/
/ /NST/JVJ

Designed: 08/21/12
TIER 3 PHASE 3
M.P.177.00 TO
M.P.160.00
UPGRADE XINGS AND
CP'S FOR HIGH
SPEED RAIL
Rec#: WO#:22820
IS: MWK/
/ /NST/MJF

MODIFICATION LEVEL	
O.A. LAST LEVEL CHECKED	DU
LAST LEVEL MOD THIS TYPICAL	DU
LAST LEVEL BY DESIGNER	DU
CHANGED FROM TYPICAL?	Y

REV 01.24.11 4K 4GFTYP.6

CIRCUIT MODIFICATIONS ARE NOT TO BE MADE WITHOUT AUTHORITY FROM THE OFFICE OF SIGNAL DESIGN

Date: 08/21/12
Des: NST
Chk: MWK
AFE: 22820

UNION PACIFIC RAILROAD
WILLIAMSVILLE, ILLINOIS
MAIN STREET
SPRINGFIELD SUBDIVISION
Office of AVP Engineering - Signal Omaha, Nebraska

Sh.: 10
DOT 294275U
MP: 173.02
ID: CSL17302.10X

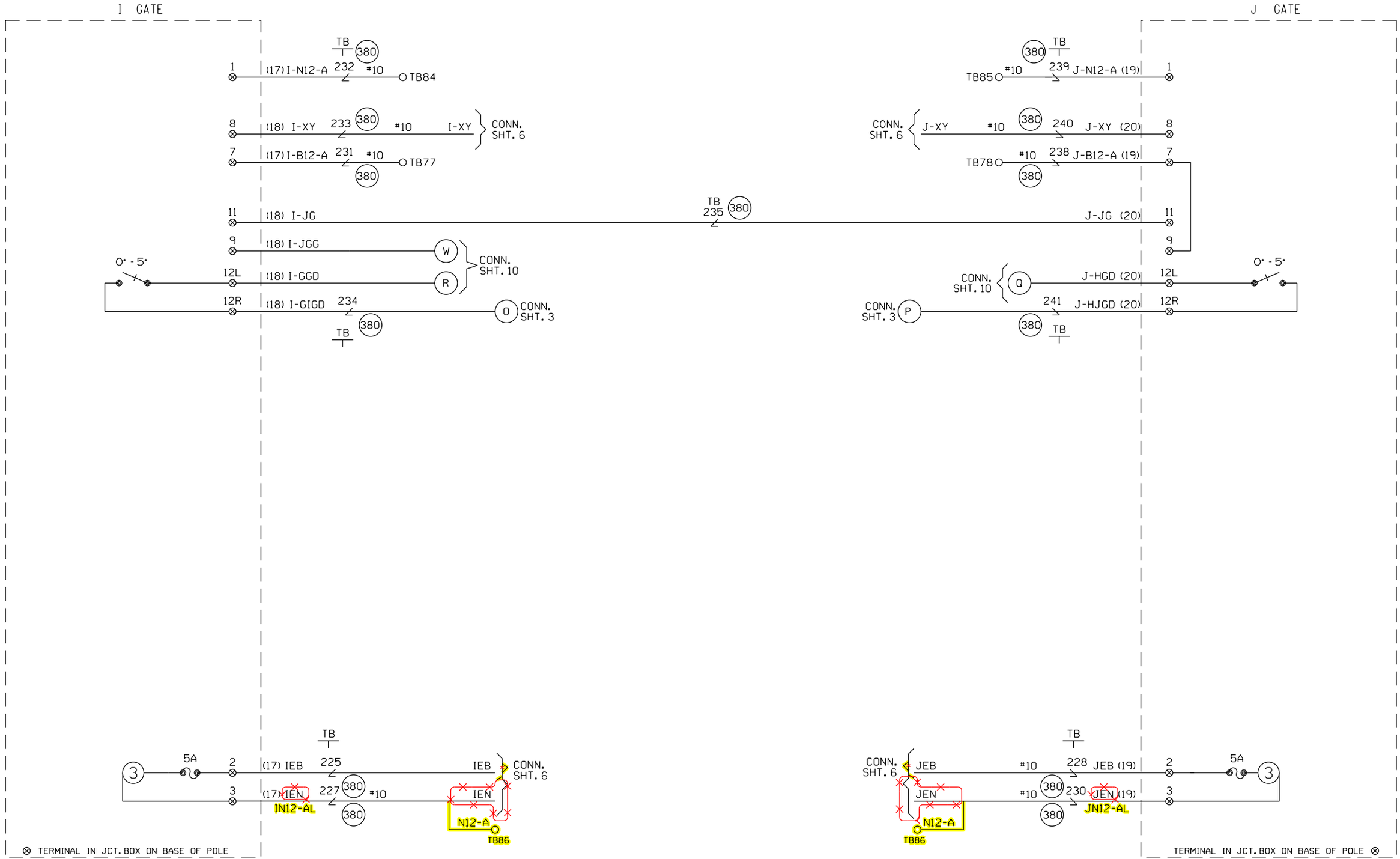

= IN
= OUT

CABLE TABULATION

CABLE NO. 17 5C. NO.6 U.G.B.T. TO GATE I
CABLE NO. 18 7C. NO.14 U.G.B.T. TO GATE I
CABLE NO. 19 5C. NO.6 U.G.B.T. TO GATE J
CABLE NO. 20 7C. NO.14 U.G.B.T. TO GATE J

~~NEW SHEET~~

Designed: 2/25/15
TIER 3 PHASE 3
M.P.177.00 TO
M.P.160.00
HSR SCOPE CHANGE
Rec#: WO#:22820
IS: MWK/
/ /NST/JVJ

Designed: 08/21/12
TIER 3 PHASE 3
M.P.177.00 TO
M.P.160.00
UPGRADE XINGS AND
CP'S FOR HIGH
SPEED RAIL
Rec#: WO#:22820
IS: MWK/
/ /NST/MJF

MODIFICATION LEVEL	
O.A. LAST LEVEL CHECKED	DU
LAST LEVEL MOD THIS TYPICAL	DU
LAST LEVEL BY DESIGNER	DU
CHANGED FROM TYPICAL?	Y

REV 01.24.11 4K 4GFTYP.6

CIRCUIT MODIFICATIONS ARE NOT TO BE MADE WITHOUT AUTHORITY FROM THE OFFICE OF SIGNAL DESIGN

Date: 08/21/12
Des: NST
Chk: MWK
AFE: 22820

UNION PACIFIC RAILROAD

WILLIAMSVILLE, ILLINOIS
MAIN STREET
SPRINGFIELD SUBDIVISION

Office of AVP Engineering - Signal Omaha, Nebraska

Sh.: 11
DOT 294275U
MP: 173.02
ID: CSL17302.11X

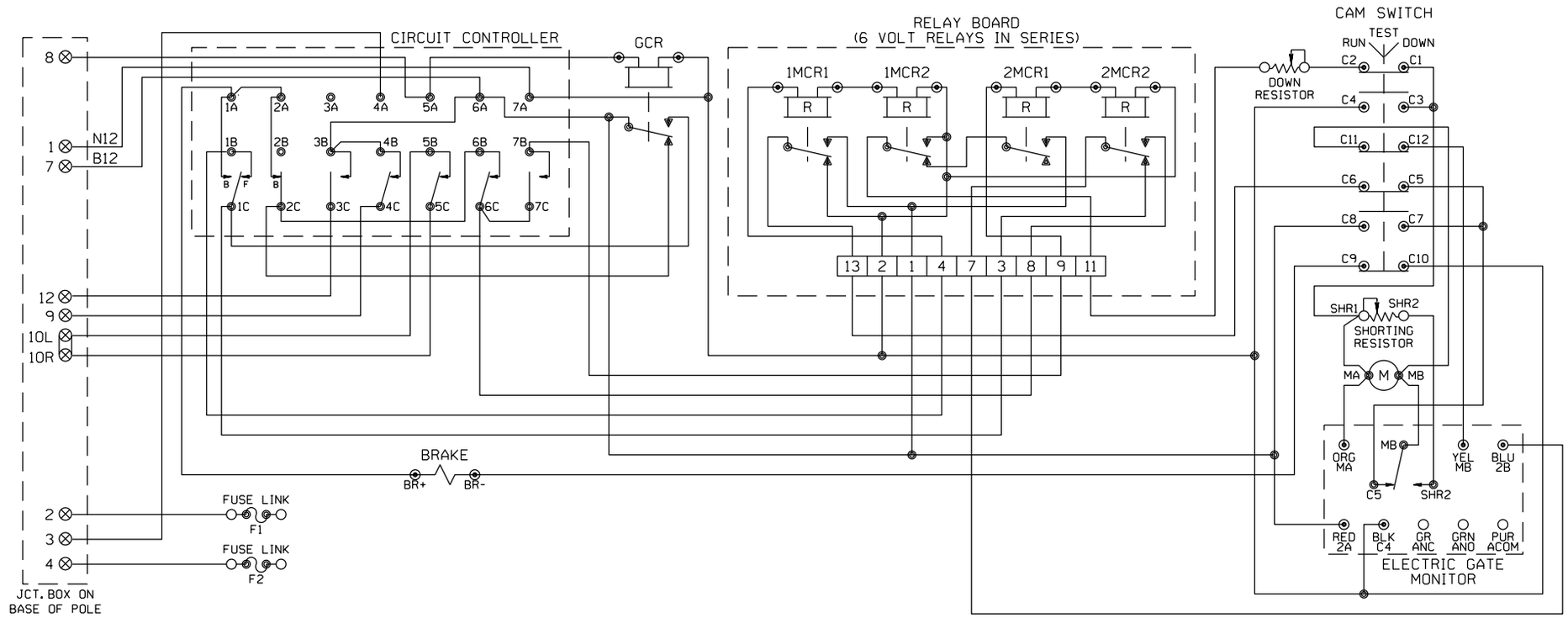

FOR WIRING GATES "C" AND "D"

WCH 3597 EXIT GATE

CONTACT	CLOSED	FUNCTION
1F	90-2	POWER DOWN
1B	2-0	ENGAGE BRAKE DOWN
2B	86-90	ENGAGE BRAKE UP
3	0-10	GATE DOWN
4	82-90	GATE CLEAR
5	10-90	BELL
6	60-90	POWER UP
7	0-75	DROP POWER UP

MECHANISM SHOWN IN CLEAR POSITION

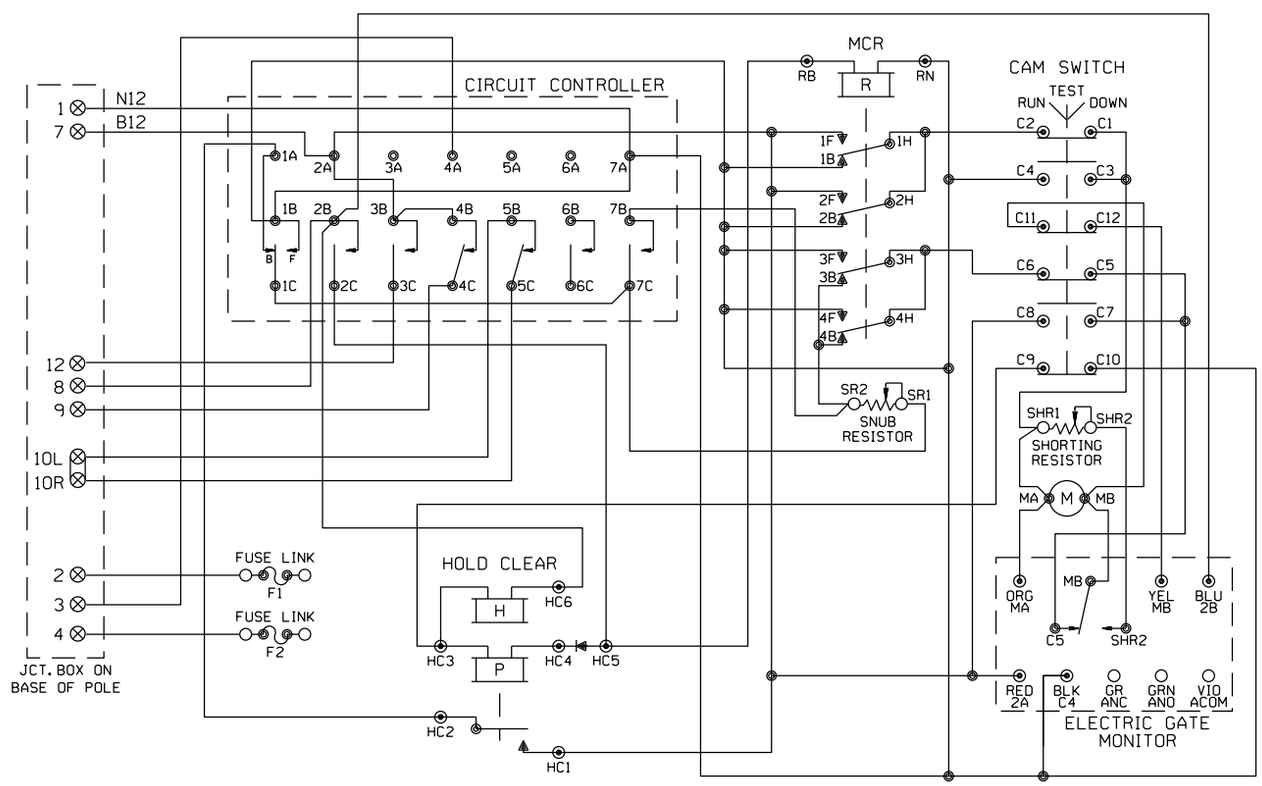

FOR WIRING GATES "A" AND "B"

WCH 3597 ENTRANCE GATE

CONTACT	CLOSED	FUNCTION
1B	75-90	POWER DOWN
1F	0-70	SNUB DOWN
2	0-86	POWER UP
3	0-10	GATE DOWN
4	82-90	GATE CLEAR
5	10-90	BELL
6	SPARE	SPARE
7	0-10	SNUB

MECHANISM SHOWN IN CLEAR POSITION

——— = IN
—×—×— = OUT

WILLIAMSVILLE, ILLINOIS
MAIN STREET
M.P. 173.00
SPRINGFIELD SUBDIVISION
D.O.T.#294 275U

Designed: 08/21/12
TIER 3 PHASE 3
M.P.177.00 TO
M.P.160.00
UPGRADE XINGS AND
CP'S FOR HIGH
SPEED RAIL
Rec#: WO#:22820
IS: MWK/
/ /NST/MJF

REV. 6-20-08
UPGRADED CROSSING
PROTECTION FOR THE
HIGH SPEED RAIL
PROJ. FROM MAZONIA
TO SPRINGFIELD
W.O. # 00183
REC. #15265
3-14-06 JJF
GNT/WITT/WITT/JNM

MODIFICATION LEVEL	
Q.A. LAST LEVEL CHK'D.	DA
LAST LEVEL MOD. THIS TYP.	CZ
LAST LEVEL BY DESIGNER.	DD
CHANGED FROM TYP.? Y/N	Y

CIRCUIT MODIFICATIONS ARE NOT TO BE MADE WITHOUT AUTHORITY FROM THE OFFICE OF SIGNAL DESIGN

DES: WITT.IND.
DIG: WITT.IND.
CHK: J.J.F.
A.F.E. 00183
ID= CSL173008X
12x

UNION PACIFIC RAILROAD
BLOOMINGTON, ILLINOIS TO
VALLEY JCT., ILLINOIS
C.T.C. CIRCUITS
Office of AVP Engineering-Signal OMAHA NEBR.

DATE 4-1-02
SHEET 8 12
DWG 173.00
RTE-CSL

(REV. 7-9-00)(GWIRING.DGN)

WCH 3593-E

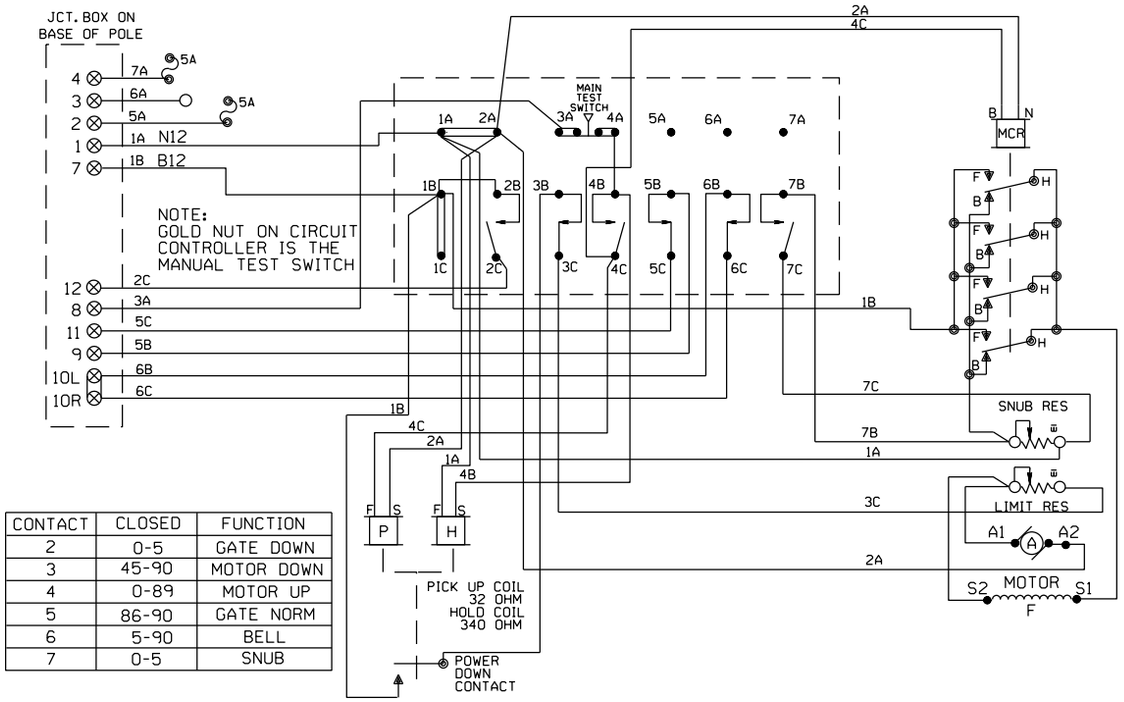

CONTACT	CLOSED	FUNCTION
2	0-5	GATE DOWN
3	45-90	MOTOR DOWN
4	0-89	MOTOR UP
5	86-90	GATE NORM
6	5-90	BELL
7	0-5	SNUB

WCH 3597-E

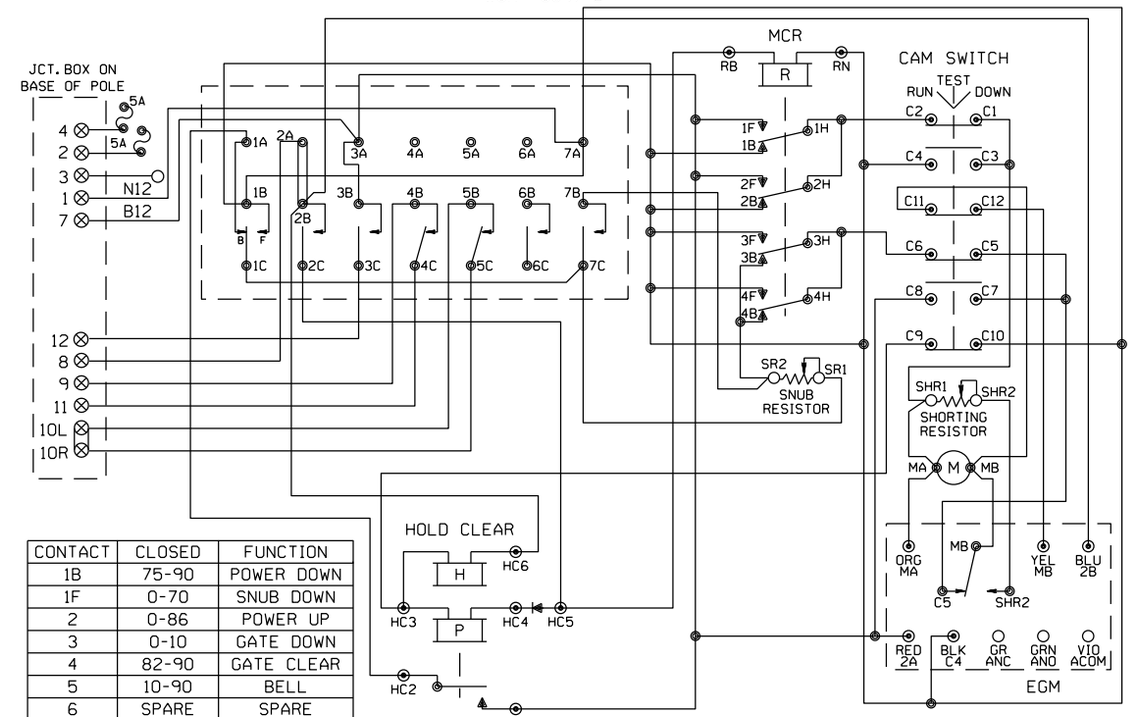

CONTACT	CLOSED	FUNCTION
1B	75-90	POWER DOWN
1F	0-70	SNUB DOWN
2	0-86	POWER UP
3	0-10	GATE DOWN
4	82-90	GATE CLEAR
5	10-90	BELL
6	SPARE	SPARE
7	0-10	SNUB

WCH 3597-RB

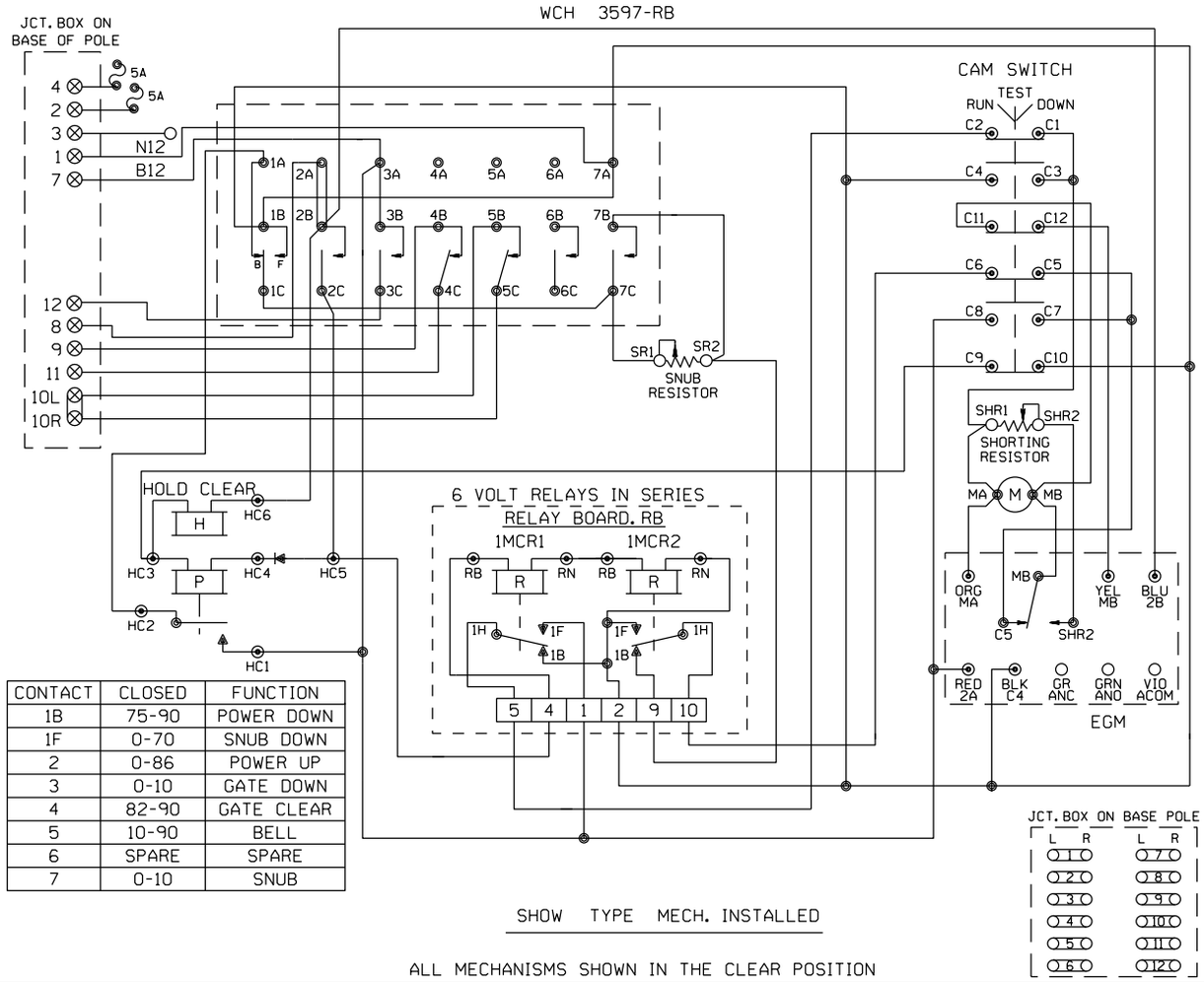

CONTACT	CLOSED	FUNCTION
1B	75-90	POWER DOWN
1F	0-70	SNUB DOWN
2	0-86	POWER UP
3	0-10	GATE DOWN
4	82-90	GATE CLEAR
5	10-90	BELL
6	SPARE	SPARE
7	0-10	SNUB

SHOW TYPE MECH. INSTALLED

ALL MECHANISMS SHOWN IN THE CLEAR POSITION

SAFETRAN S-60

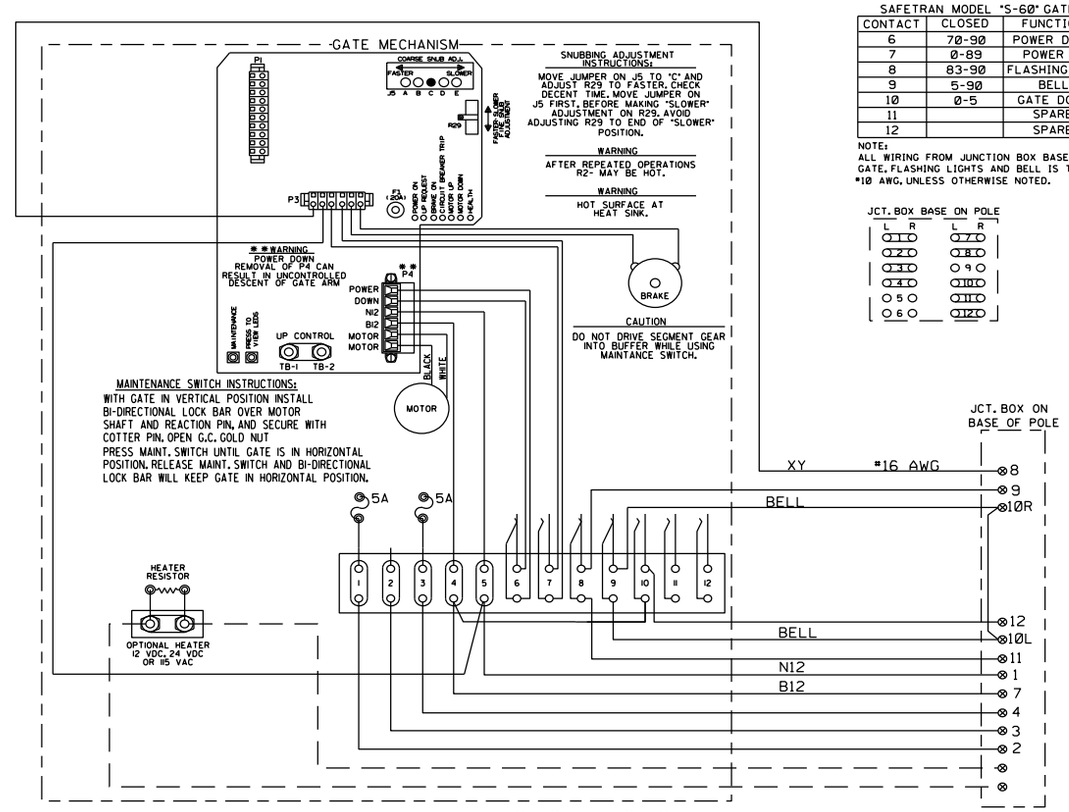

SAFETRAN MODEL "S-60" GATE

CONTACT	CLOSED	FUNCTION
6	70-90	POWER DOWN
7	0-89	POWER UP
8	83-90	FLASHING LGT.
9	5-90	BELL
10	0-5	GATE DOWN
11		SPARE
12		SPARE

NOTE:
ALL WIRING FROM JUNCTION BOX BASE TO GATE. FLASHING LIGHTS AND BELL IS TO BE #10 AWG. UNLESS OTHERWISE NOTED.

JCT. BOX BASE ON POLE

FOR WIRING GATES "G" & "H"

NEW SHEET

Designed: 08/21/12
TIER 3 PHASE 3
M.P.177.00 TO M.P.160.00
UPGRADE XINGS AND CP'S FOR HIGH SPEED RAIL
Rec#: WO#:22820
IS: MWK/ / /NST/MJF

MODIFICATION LEVEL	
O. A. LAST LEVEL CHECKED	DU
LAST LEVEL MOD THIS TYPICAL	DU
LAST LEVEL BY DESIGNER	DU
CHANGED FROM TYPICAL?	Y
REV 01.24.11 4K GWIRING.7	

CIRCUIT MODIFICATIONS ARE NOT TO BE MADE WITHOUT AUTHORITY FROM THE OFFICE OF SIGNAL DESIGN

Date: 08/21/12
Des: NST
Chk: MWK
AFE: 22820

UNION PACIFIC RAILROAD
WILLIAMSVILLE, ILLINOIS
MAIN STREET
SPRINGFIELD SUBDIVISION
Office of Sr AVP Engineering - Signal/TCO Omaha, Nebraska

Sh.: 13
DOT 294275U
MP: 173.02
ID: CSL17302.13X

WCH 3593-E

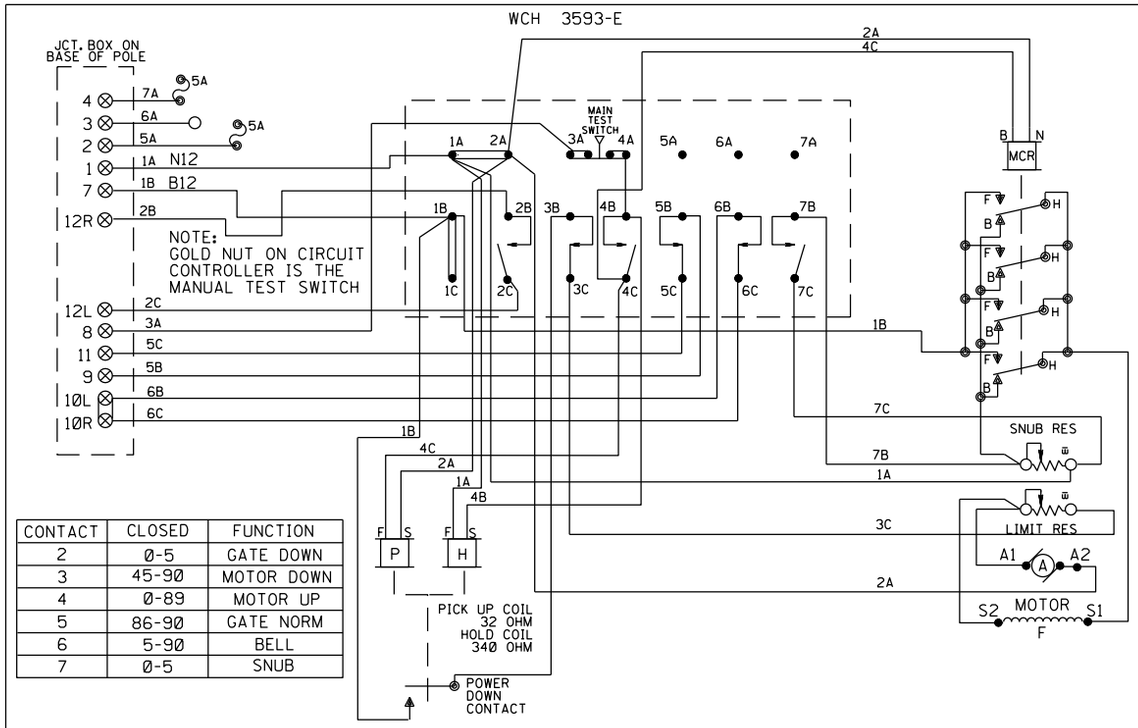

CONTACT	CLOSED	FUNCTION
2	0-5	GATE DOWN
3	45-90	MOTOR DOWN
4	0-89	MOTOR UP
5	86-90	GATE NORM
6	5-90	BELL
7	0-5	SNUB

WCH 3597-E

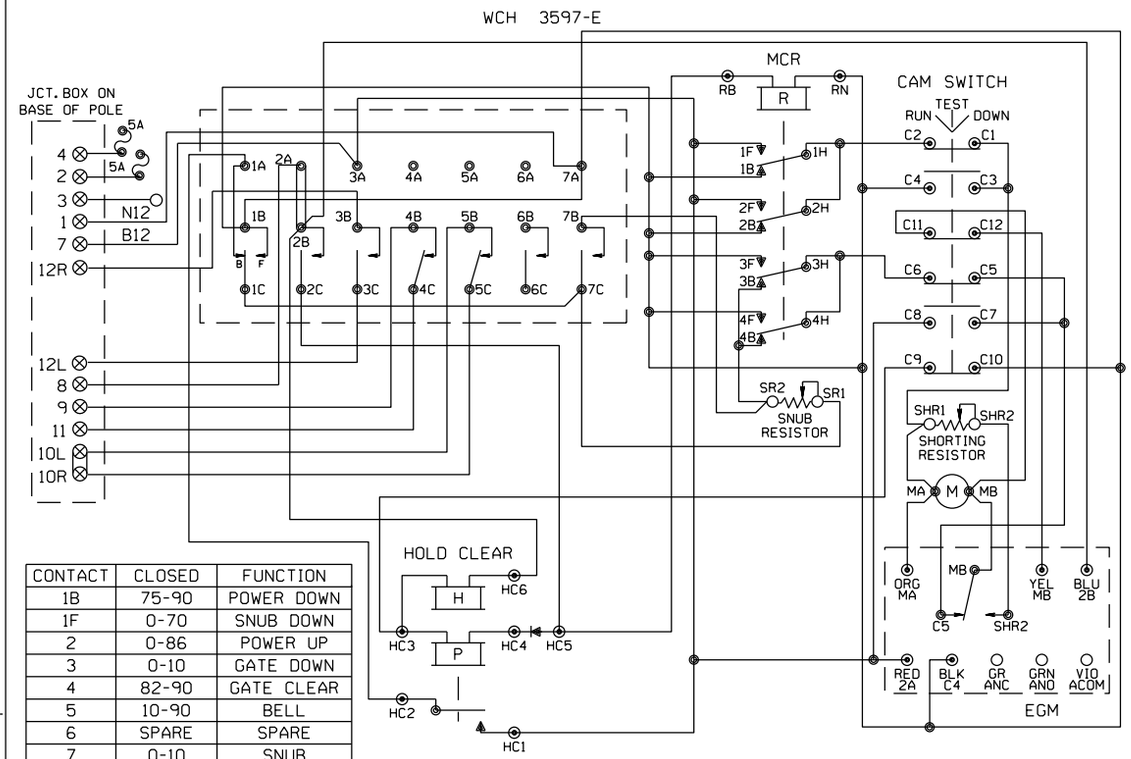

CONTACT	CLOSED	FUNCTION
1B	75-90	POWER DOWN
1F	0-70	SNUB DOWN
2	0-86	POWER UP
3	0-10	GATE DOWN
4	82-90	GATE CLEAR
5	10-90	BELL
6	SPARE	SPARE
7	0-10	SNUB

WCH 3597-RB

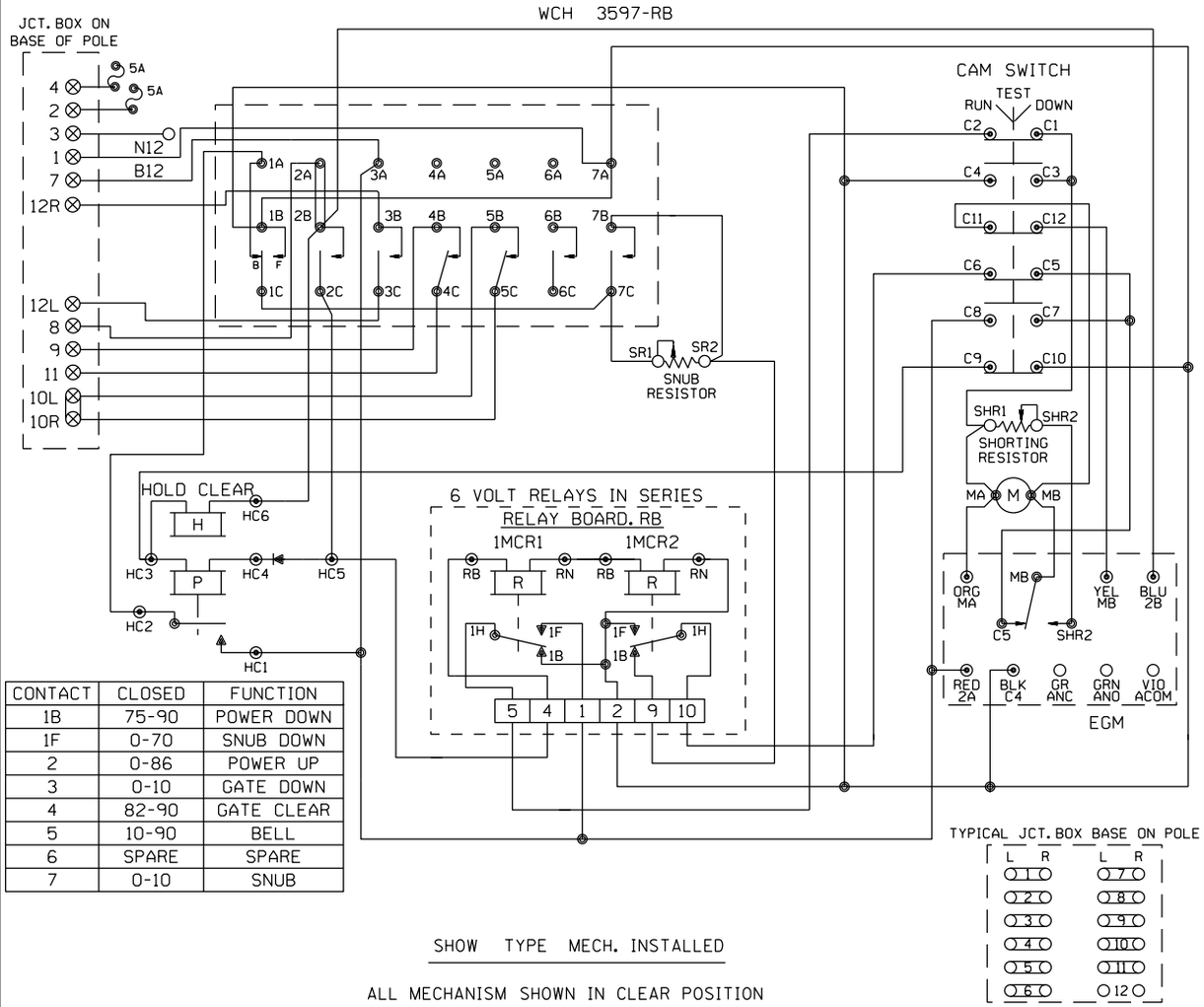

CONTACT	CLOSED	FUNCTION
1B	75-90	POWER DOWN
1F	0-70	SNUB DOWN
2	0-86	POWER UP
3	0-10	GATE DOWN
4	82-90	GATE CLEAR
5	10-90	BELL
6	SPARE	SPARE
7	0-10	SNUB

SHOW TYPE MECH. INSTALLED

ALL MECHANISM SHOWN IN CLEAR POSITION

SAFETRAN S-60

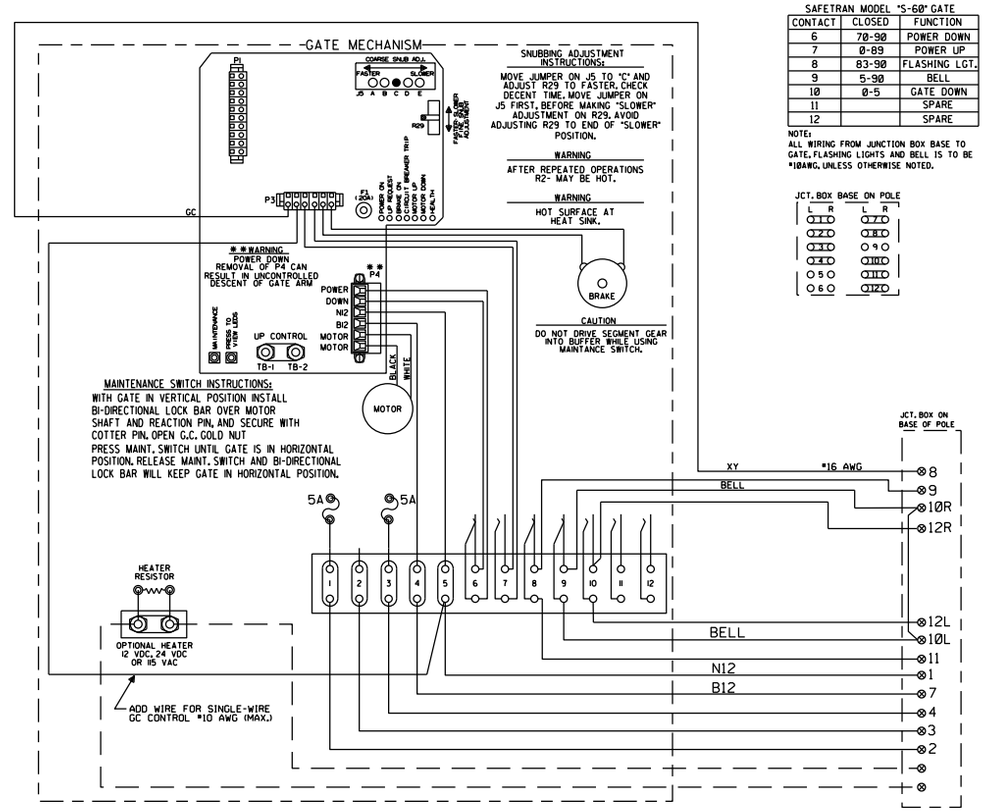

SAFETRAN MODEL "S-60" GATE

CONTACT	CLOSED	FUNCTION
6	70-90	POWER DOWN
7	0-89	POWER UP
8	83-90	FLASHING LGT.
9	5-90	BELL
10	0-5	GATE DOWN
11		SPARE
12		SPARE

NOTE: ALL WIRING FROM JUNCTION BOX BASE TO GATE, FLASHING LIGHTS AND BELL IS TO BE #10AWG, UNLESS OTHERWISE NOTED.

JCT. BOX BASE ON POLE

FOR WIRING GATES "E", "F", "I", AND "J"

NEW SHEET

Designed: 08/21/12
TIER 3 PHASE 3
M.P.177.00 TO M.P.160.00
UPGRADE XINGS AND CP'S FOR HIGH SPEED RAIL
Rec#: WO#:22820
IS: MWK/ / /NST/MJF

MODIFICATION LEVEL	
O.A. LAST LEVEL CHECKED	DU
LAST LEVEL MOD THIS TYPICAL	DU
LAST LEVEL BY DESIGNER	DU
CHANGED FROM TYPICAL?	N

REV 01.24.11 4K 4GWIRING.8

CIRCUIT MODIFICATIONS ARE NOT TO BE MADE WITHOUT AUTHORITY FROM THE OFFICE OF SIGNAL DESIGN

Date: 08/21/12
Des: NST
Chk: MWK
AFE: 22820

UNION PACIFIC RAILROAD
WILLIAMSVILLE, ILLINOIS
MAIN STREET
SPRINGFIELD SUBDIVISION
Office of AVP Engineering - Signal Omaha, Nebraska

Sh.: 13A
DOT 294275U
MP: 173.02
ID: CSL17302.13AX

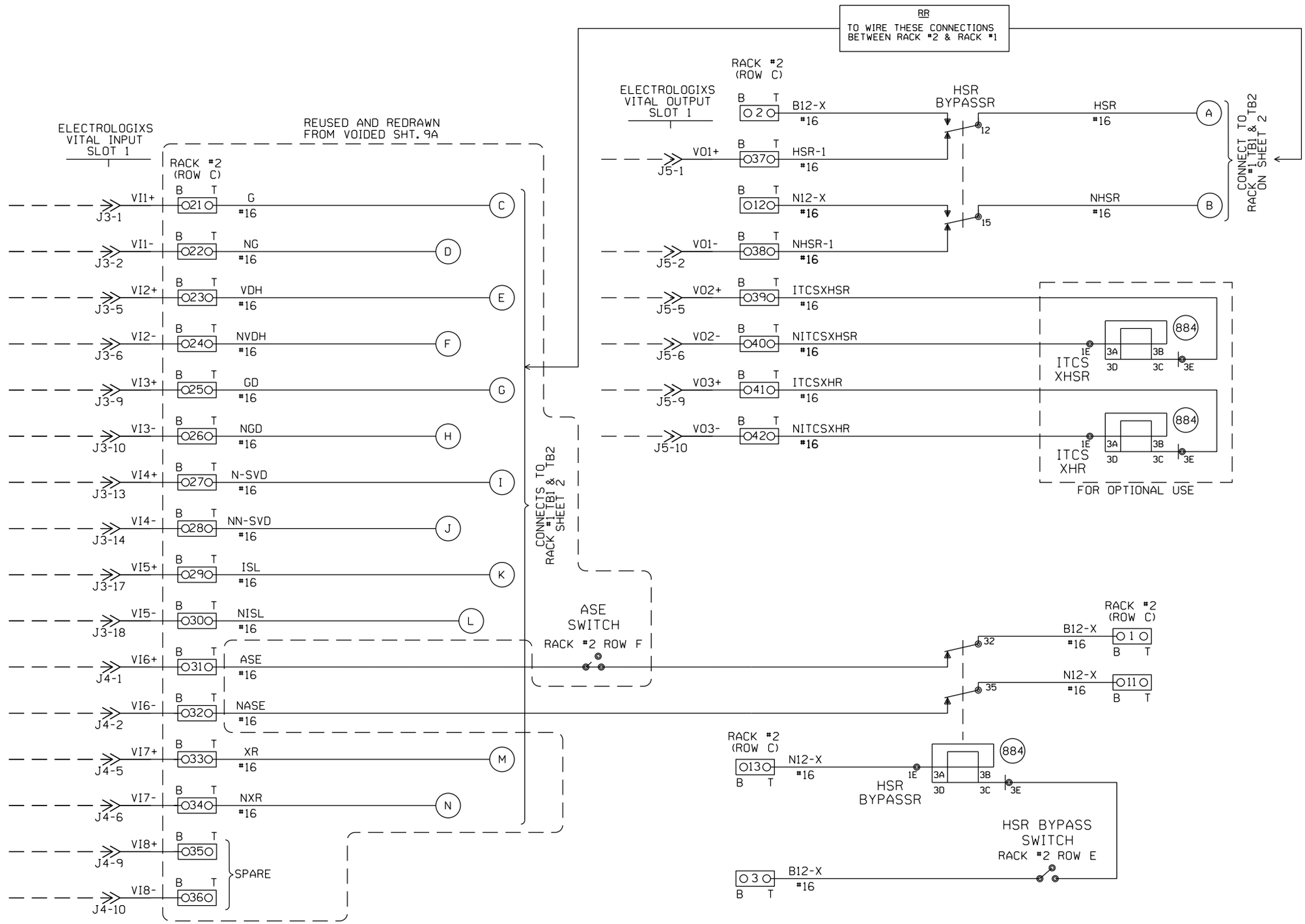

NOTES:

1. INPUT WIRES, OUTPUT WIRES, POWER WIRES, PUT IN SEPARATE BUNDLES.
2. ALL WIRES #16 UNLESS NOTED.
3. O?? O 2 POSITION WAGO BLOCK.

NEW SHEET

							Designed: 08/21/12 TIER 3 PHASE 3 M.P.177.00 TO M.P.160.00 UPGRADE XINGS AND CP'S FOR HIGH SPEED RAIL Rec": WO": 22820 IS: /MWK /NST/MJF	CIRCUIT MODIFICATIONS ARE NOT TO BE MADE WITHOUT AUTHORITY FROM THE OFFICE OF SIGNAL DESIGN	Date: 08/21/12	UNION PACIFIC RAILROAD	Sh.: 14
									Des: NST	WILLIAMSVILLE, ILLINOIS MAIN STREET SPRINGFIELD SUBDIVISION	DOT 294275U
									Chk: MWK		MP: 173.02
									AFE: 22820	Office of AVP Engineering - Signal Omaha, Nebraska	ID: CSL17302.14X

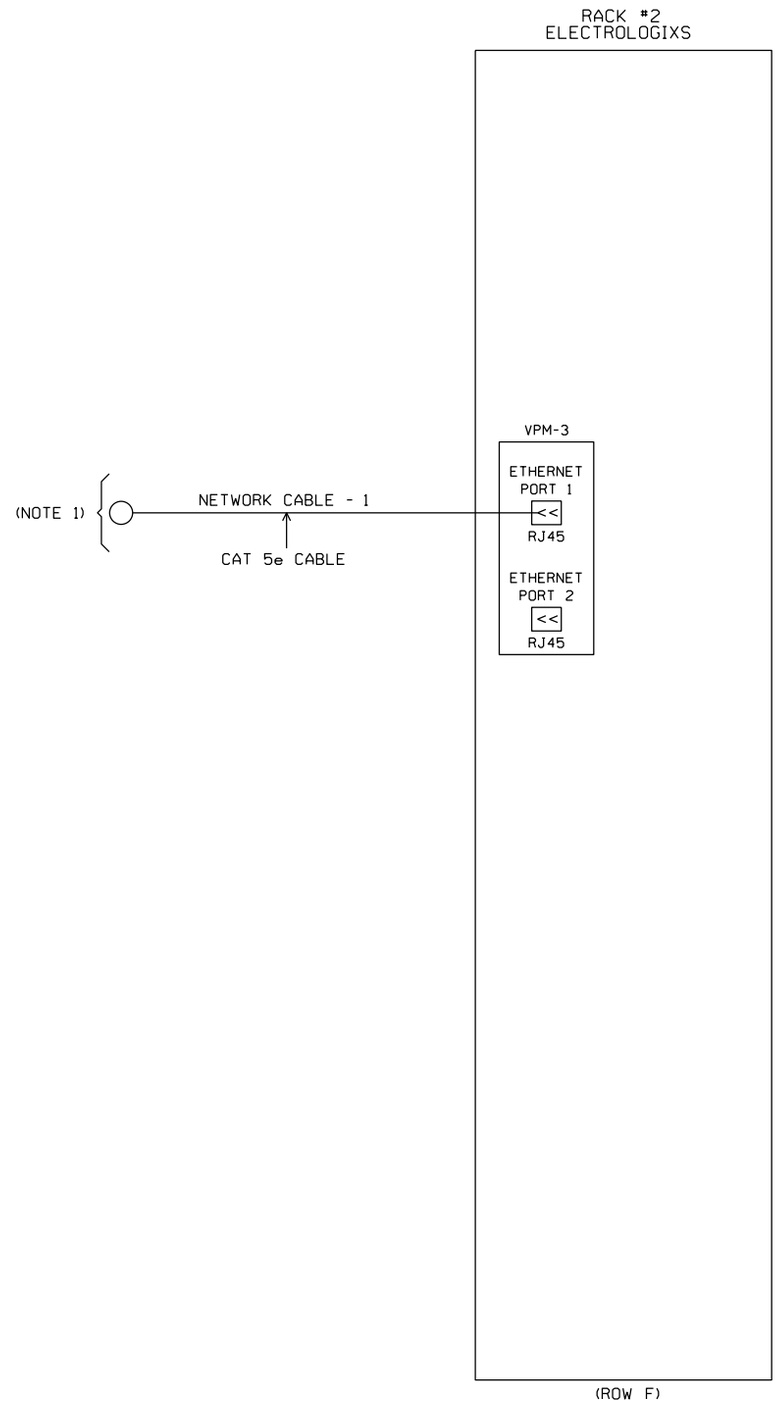

NOTES:

1. TO NETWORK SWITCH
   (SUPPLIED BY RR)

NEW SHEET

							Designed: 08/21/12 TIER 3 PHASE 3 M.P.177.00 TO M.P.160.00 UPGRADE XINGS AND CP'S FOR HIGH SPEED RAIL Rec#: WO#:22820 IS: /MWK / /NST/MJF	CIRCUIT MODIFICATIONS ARE NOT TO BE MADE WITHOUT AUTHORITY FROM THE OFFICE OF SIGNAL DESIGN	Date: 08/21/12 Des: NST Chk: MWK AFE: 22820	UNION PACIFIC RAILROAD WILLIAMSVILLE, ILLINOIS MAIN STREET SPRINGFIELD SUBDIVISION Office of AVP Engineering - Signal Omaha, Nebraska	Sh.: 14A DOT 294275U MP: 173.02 ID: CSL17302.14AX

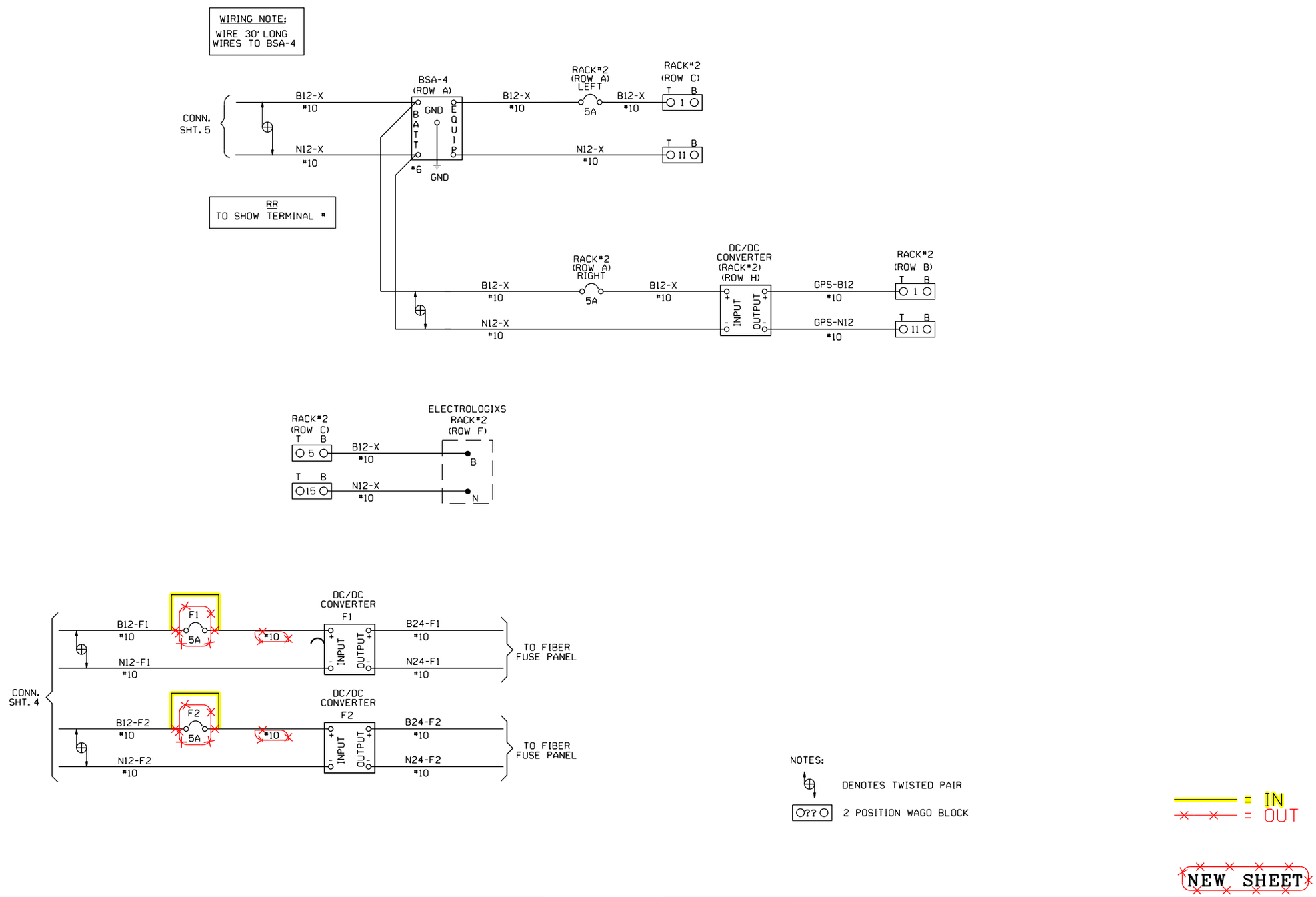

NEW SHEET

						Designed: 2/25/15 TIER 3 PHASE 3 M.P.177.00 TO M.P.160.00 HSR SCOPE CHANGE Rec#: WO#: 22820 IS: MWK / / NST/JVJ	Designed: 08/21/12 TIER 3 PHASE 3 M.P.177.00 TO M.P.160.00 UPGRADE XINGS AND CP'S FOR HIGH SPEED RAIL Rec#: WO#: 22820 IS: MWK / / NST/MJF	CIRCUIT MODIFICATIONS ARE NOT TO BE MADE WITHOUT AUTHORITY FROM THE OFFICE OF SIGNAL DESIGN	Date: 08/21/12 Des: NST Chk: MWK AFE: 22820	UNION PACIFIC RAILROAD WILLIAMSVILLE, ILLINOIS MAIN STREET SPRINGFIELD SUBDIVISION Office of AVP Engineering - Signal Omaha, Nebraska	Sh.: 14B DOT 294275U MP: 173.02 ID: CSL17302.14BX