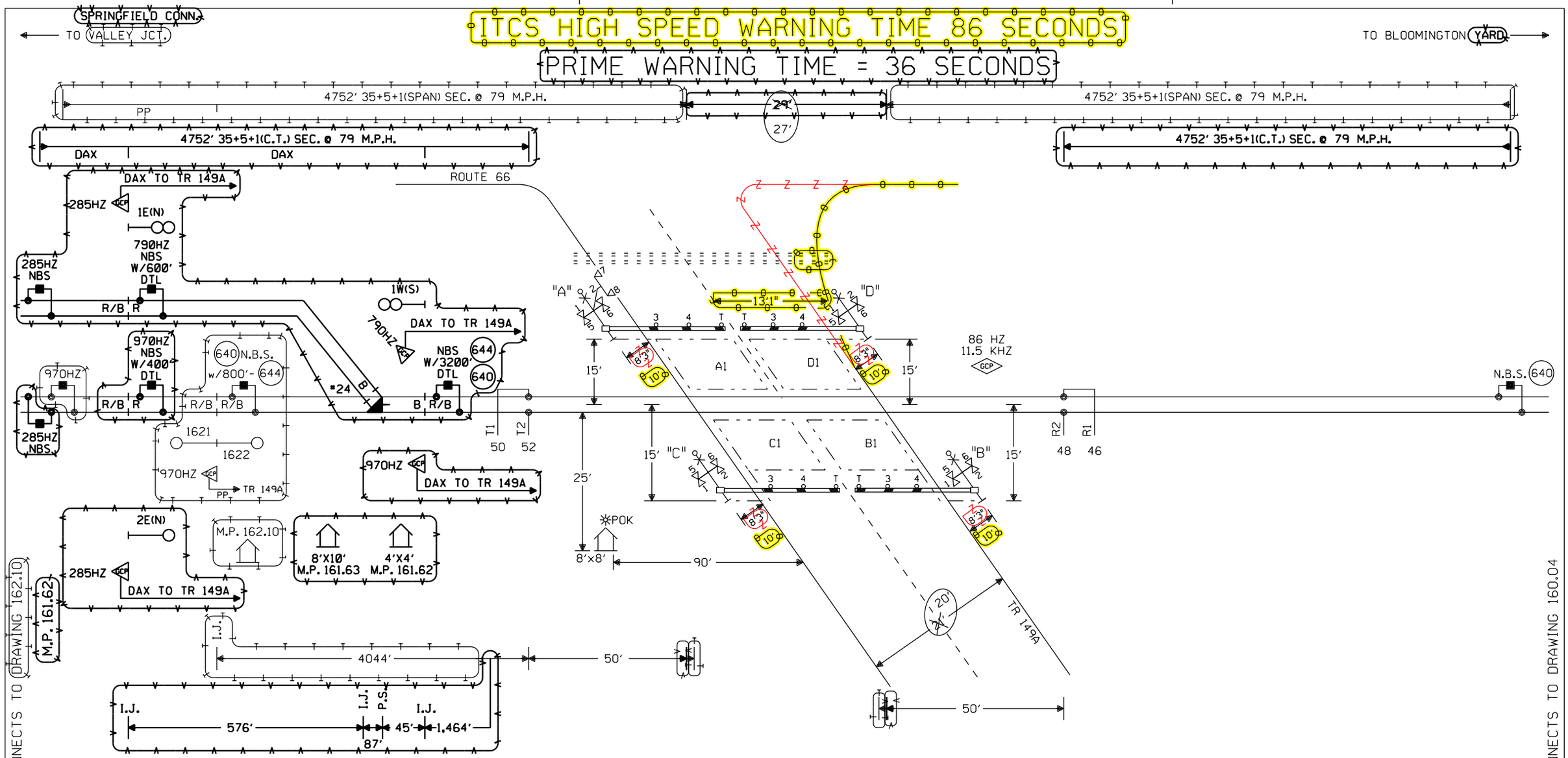

NOTES:

⊗ = TWISTED WIRES
INSULATED 1 TWIST PER FT.
ALL TRACK WIRES 2C. #6

TRANSMITTER AND RECEIVER LEADS TO BE SEPARATED BY AT LEAST 12" IN TRENCH, LENGTHS SHOULD NOT EXCEED MANUFACTURES RECOMMENDATION.

TOP OF FOUNDATION TO BE AT SAME ELEVATION AS THE SURFACE OF THE TRAVELED WAY & NO MORE THAN 4" ABOVE THE SURFACE OF THE GROUND.

ALL BUNGALOW WIRING TO BE #16 AWG FLEX UNLESS OTHERWISE SPECIFIED EXCEPT ALL GROUND WIRE TO BE #6 AWG FLEX OR LARGER.

ALL WIRING IN GATE MECHANISM TO BE #10 "AWG FLEX".

REFER TO UP STANDARD DWG FOR BUNGALOW GROUNDING.

DO NOT USE 7 CELLS OF B12 BATTERY UNLESS REQUIRED TO MAINTAIN MINIMUM LAMP VOLTAGE.

ALL LIGHTS TO BE 12" ROUNDELS.

= = = = = = = 4" X 100' 70' CONDUIT

LIGHTS: LED LIGHTS

GATE A, C: 23'

GATE B, D: 23'

CRTU CELLEMETRY

EXIT GATE MANAGEMENT SYSTEM (EGMS) LOOP LOCATION:

1.) 12" FROM CONCRETE CROSSING PANEL. MAY VARY FROM 6" TO 12" DEPENDING ON PAVEMENT QUALITY.

2.) 2' FROM CROSSING CENTERLINE.

3.) 3.5' FROM GATE ARM.

4.) 2' FROM THE EDGE OF THE TRAVELED WAY. MAY BE INCREASED UP TO A MAXIMUM OF 5' WHERE AN IMPROVED SHOULDER OR OTHER EXISTS.

5.) MAXIMUM LOOP WIDTH NOT TO EXCEED 8' AND MINIMUM WIDTH NOT TO BE LESS THAN 3'.

— - - = EGMS LOOP

= EXISTING/REVISE ORIGINALS IF A.C.'D

= IN

= OUT

= EXISTING/REVISE ORIGINALS IF A.C.'D

= IN

= OUT

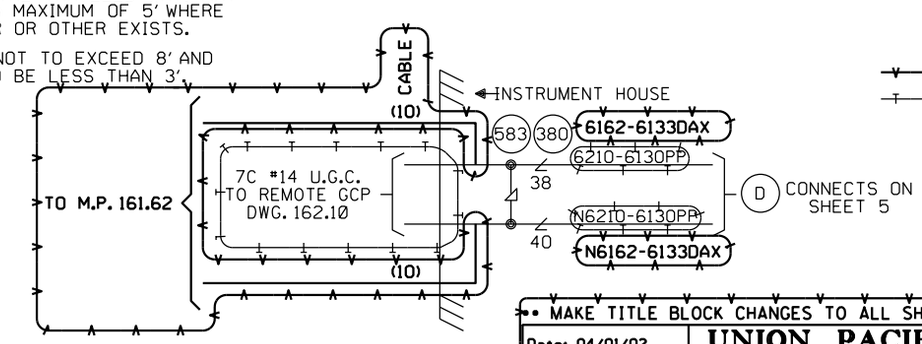

BROADWELL, ILLINOIS
TR 149A
M.P. 161.30
SPRINGFIELD SUBDIVISION
D.O.T.#294 261L

S ← → N

CABLE TABULATION

CABLE NO. 10 #14 U.G.B.T. HOUSE TO M.P. 161.62

•• MAKE TITLE BLOCK CHANGES TO ALL SHEETS ••

Date: 04/01/02	UNION PACIFIC RAILROAD	Sh.: 1	
Des: WIT	BROADWELL, ILLINOIS TR 149A SPRINGFIELD SUBDIVISION	DOT 294261L	
Chk: JJF		MP: 161.33	
AFE: 00183	Office of AVP Engineering-Signal Omaha, Nebraska	ID: CSL16133.1X	
DES: WITT.IND.	UNION PACIFIC RAILROAD BLOOMINGTON, ILLINOIS TO VALLEY JCT., ILLINOIS C.T.C. CIRCUITS	DATE 1-1-02	
DIG: WITT.IND.		SHEET 1	
CHK: J.J.F.		DWG 161.30	
A.F.E. 00183	Office of AVP Engineering-Signal OMAHA NEBR.	RTE-CSL	
ID= CSL16130.1X			

Designed: 2/25/15
TIER 3 PHASE 3 M.P.177.00 TO M.P.160.00 HSR SCOPE CHANGE
Rec*: IS: WO*: 22820 MWK/ /NST/JVJ

Designed: 08/21/12
TIER 3 PHASE 3 M.P.177.00 TO M.P.160.00 UPGRADE XINGS AND CP'S FOR HIGH SPEED RAIL
Rec*: IS: WO*: 22820 /MWK / /NST/MJF

REV. 6-20-08
UPGRADED CROSSING PROTECTION FOR THE HIGH SPEED RAIL PROJ. FROM MAZONIA TO SPRINGFIELD
W.O. # 00183
REC. #15265
3-21-06 JJF
JM/WITT/WITT/JNM

MODIFICATION LEVEL	
Q.A. LAST LEVEL CHK'D.	DA
LAST LEVEL MOD. THIS TYP.	CZ
LAST LEVEL BY DESIGNER.	DD
CHANGED FROM TYP.? Y/N	Y

CIRCUIT MODIFICATIONS ARE NOT TO BE MADE WITHOUT AUTHORITY FROM THE OFFICE OF SIGNAL DESIGN

(REV. 7-9-00)(1TKBG.1)

The Incremental Train Control System (ITCS) provides advance activation of the crossings for all ITCS equipped trains travleing over 20 M.P.H. The ITCS is a communication-based train control system that provides enforcement and advanced start of public crossings. ITCS vitally monitors the existing crossings as a basis for determining permissible action and uses a radio frequency (RF) data link with a vital communication protocol to send wayside status to the trains. Enforcement of speed limits is performed vitally by an onboard computer (OBC). The wayside components monitor Crossing Warning Systems and relay the information to the train over the RF network as a list of device statuses. The OBC interprets the statuses and enforces all speed limits and braking based upon those statuses. The OBC must receive an acknowledgment from the crossing, verifying the proper operation of the Crossing Warning System, before the train can proceed at high speed through the crossings aprroach circuit. This is the High Speed OK (HSOK) status. If this status is not true, a 79 M.P.H. target speed limit is placed at the start of the conventional track circuit based approach of the crossing.
Conditions that would cause this to happen are:

- The Advance Start Enable test switch is open.
- The Crossing has been activated longer than 2 (3.5) minutes but less than 5 minutes, without a train present on the crossing.
- The loss of communitations longer than 2 minutes 30 seconds.

The most restrictive status in the health status. If the health status for the crossing is not true a 15 M.P.H. target speed limit is placed at the leading island wires of the crossing.
Conditions that would cause this to happen are:

- Activation failure detected. (A (No) vertical gate not (contact) indicating de-energized within 10 seconds of request for crossing to activate)

  If this failure has occurred it requires the advance start enable test switch to be opened to reset the box before any further High Speed operation is allowed.
- The crossing has been activated longer than 5 minuts. (minutes, without a train present on the crossing.)
- The vehicle detector does not indicate clear, or the Gate Down circuit not energized within 20 seconds (Field adjustable) of crossing being requested to activate.
- The vehicle detector health not true. This input consists of the detector loop health, EGMS health, Battery health, and Long Term Occupancy of Vehicle Detector Loop (Greater than 1 minute.)

= IN
= OUT

NEW SHEET

						Designed: 2/25/15 TIER 3 PHASE 3 M.P.177.00 TO M.P.160.00 HSR SCOPE CHANGE Rec#: WO#: 22820 IS: MWK / / /NST/JVJ	Designed: 08/21/12 TIER 3 PHASE 3 M.P.177.00 TO M.P.160.00 UPGRADE XINGS AND CP'S FOR HIGH SPEED RAIL Rec#: WO#: 22820 IS: /MWK / /NST/MJF	CIRCUIT MODIFICATIONS ARE NOT TO BE MADE WITHOUT AUTHORITY FROM THE OFFICE OF SIGNAL DESIGN	Date: 08/21/12 Des: NST Chk: MWK AFE: 22820	UNION PACIFIC RAILROAD BROADWELL, ILLINOIS TR 149A SPRINGFIELD SUBDIVISION Office of AVP Engineering - Signal Omaha, Nebraska	Sh.: 1A DOT 294261L MP: 161.33 ID: CSL16133.1AX

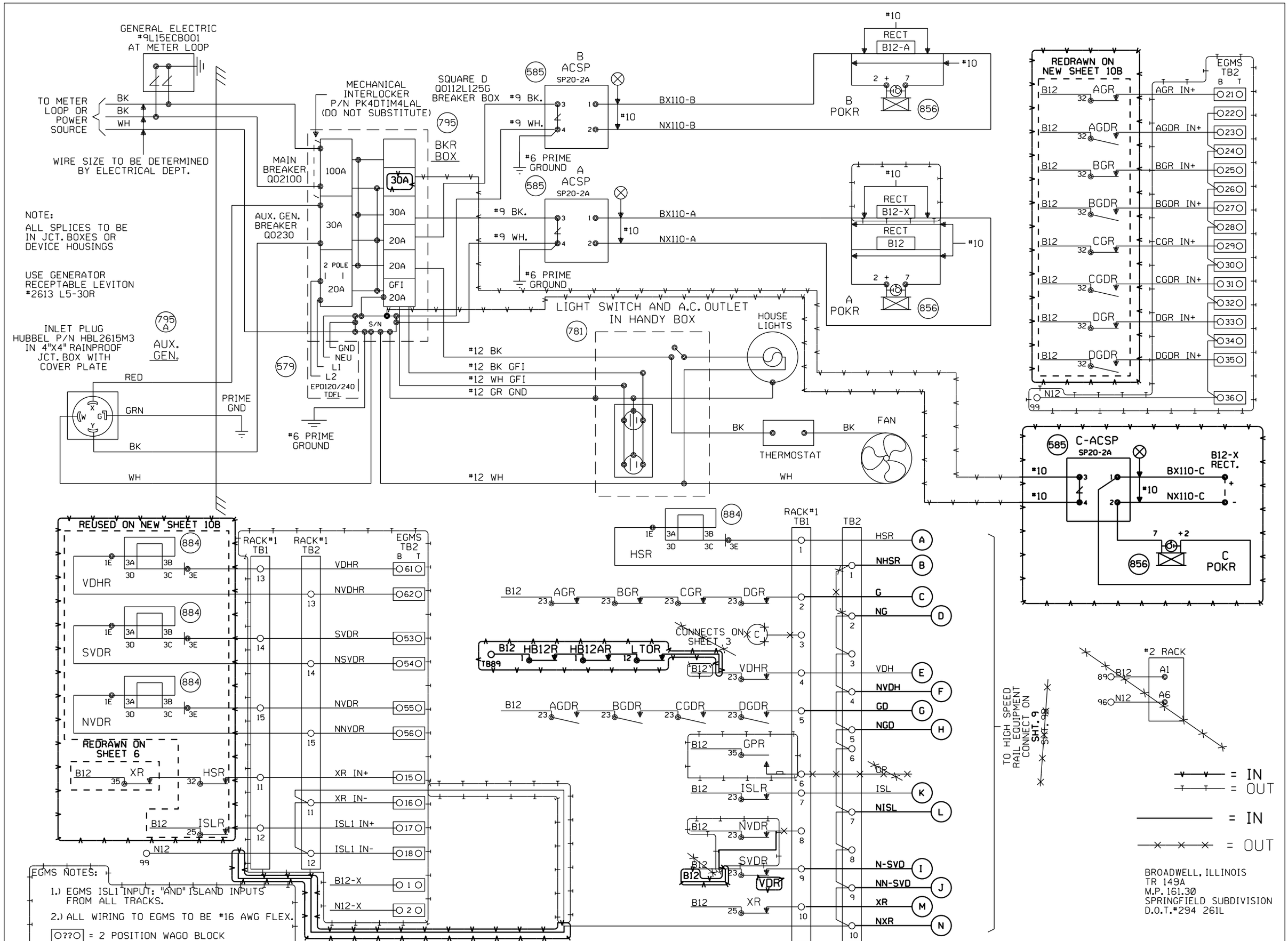

Designed: 08/21/12
TIER 3 PHASE 3
M.P.177.00 TO M.P.160.00
UPGRADE XINGS AND CP'S FOR HIGH SPEED RAIL
Rec#: WO#: 22820
IS: /MWK / /NST/MJF

02-24-09
INSTALL CONCENTRATOR RACK FOR XINGS
W.O. 87933 MAS

REV. 6-20-08
UPGRADED CROSSING PROTECTION FOR THE HIGH SPEED RAIL PROJ. FROM MAZONIA TO SPRINGFIELD
W.O. # 00183
REC. #15265
3-21-06 JJF
JM/WITT/WITT/JNM

MODIFICATION LEVEL	
Q.A. LAST LEVEL CHK'D.	DA
LAST LEVEL MOD. THIS TYP.	CZ
LAST LEVEL BY DESIGNER.	DD
CHANGED FROM TYP.? Y/N	Y

CIRCUIT MODIFICATIONS ARE NOT TO BE MADE WITHOUT AUTHORITY FROM THE OFFICE OF SIGNAL DESIGN

DES: WITT.IND.
DIG: WITT.IND.
CHK: J.J.F.
A.F.E. 00183
ID= CSL16130.2X

UNION PACIFIC RAILROAD BLOOMINGTON, ILLINOIS TO VALLEY JCT., ILLINOIS C.T.C. CIRCUITS

Office of AVP Engineering-Signal OMAHA NEBR.

DATE 4-1-02
SHEET 2
DWG 161.30
RTE-CSL

(REV. 7-9-00) (HCA4G.2)

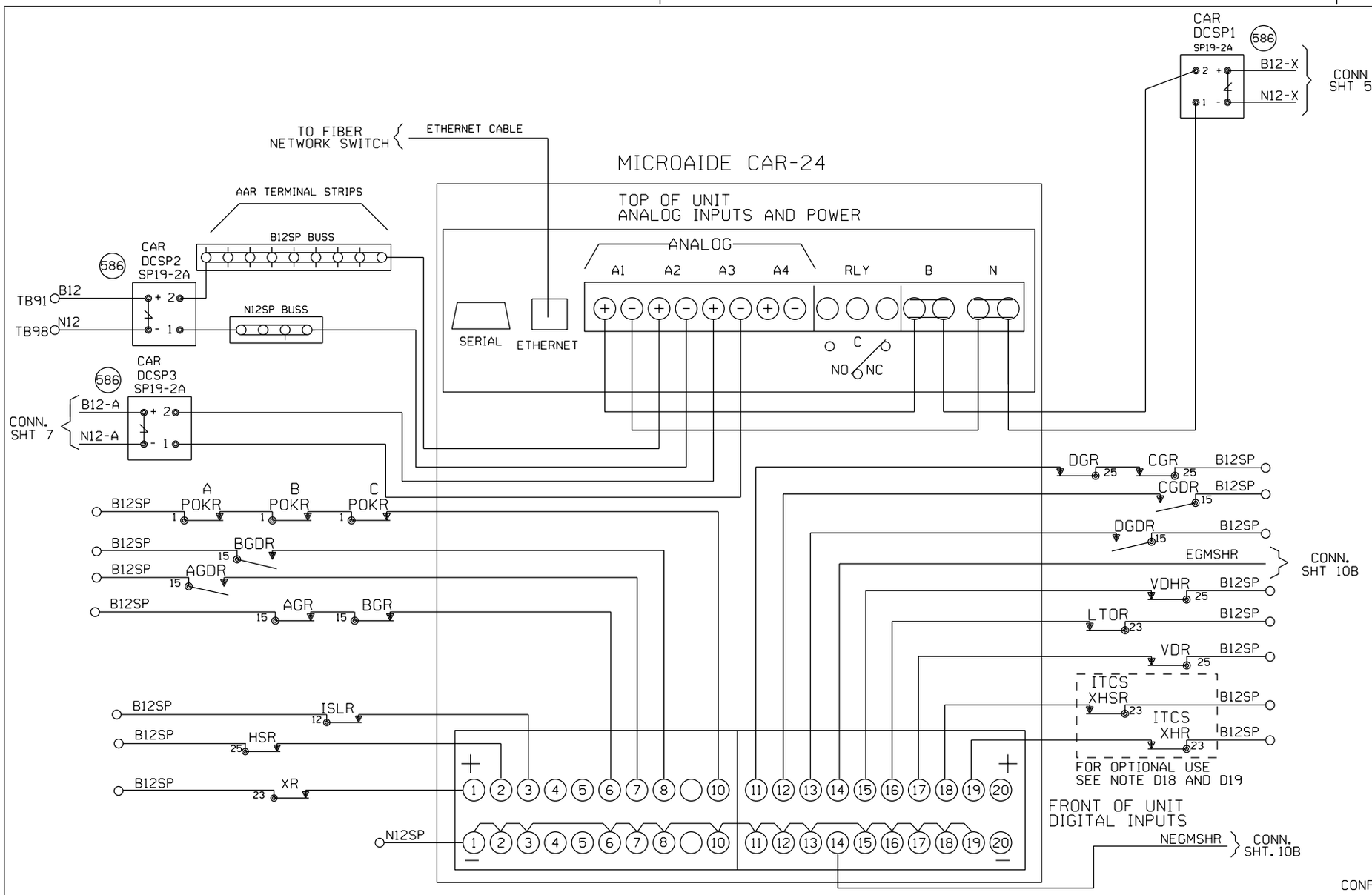

NOTE:
1) DO NOT JUMPER UNUSED INPUTS UNLESS OTHERWISE NOTED
2) THE CAR24 SERIAL PORT IS AVAILABLE TO ADD REMOTE CONNECTIVITY TO EXISTING LOGGING EQUIPMENT. USE NULL MODEM CABLE WITH SHIELDING DISCONNECTED AT ONE OR BOTH SIDES.

ANALOG INPUTS:
A1) B12X BATTERY BANK
A2) B12 BATTERY BANK
A3) B12-A BATTERY BANK
A4) BATTERY BANK 4

DIGITAL INPUTS
D1) XR
D2) HSR
D3) ISLAND 1
D4) ISLAND 2
D5) ISLAND 3
D6) GATE UP INDICATION
D7) GATE DOWN INDICATION 1
D8) GATE DOWN INDICATION 2
D9)
D10) POR
D11) Exit Gate Up Indication
D12) Exit Gate Down Indication 1
D13) Exit Gate Down Indication 2
D14) EGMSHR - EGMS Overall System Health Output
D15) VDHR - EGMS Loop Health Output
D16) LTOR - EGMS Long-Term Obstacle
D17) VDR - EGMS Vehicle Detect Relay
D18) ITCS High Speed Start Health - XHSR.
Jumper to B12SP if unused.
D19) ITCS Health - XHR.
Jumper to B12SP if unused.
D20)

Alarm Name	Alarm Code	Clearing Code	Alarm Conditions	Alarm Clearing Conditions	Cleared by Maintainer Mode?
AC Power Off 30 Minutes	IP	PR	POR input low for 30 minutes.	POR input high for 5 minutes.	No
AC Power Off 2 Hours	PK	PR	POR input low for 2 Hours.	POR input high for 5 minutes.	No
Battery Bank #1 Out of Range	B1	1B	Battery 1 below 11V or over 19V for 10 seconds.	Battery 1 between 11V and 19V for 5 minutes	No
Battery Bank #2 Out of Range	B2	2B	Battery 2 below 11V or over 19V for 10 seconds.	Battery 2 between 11V and 19V for 5 minutes	No
Battery Bank #3 Out of Range	B3	3B	Battery 3 below 11V or over 19V for 10 seconds.	Battery 3 between 11V and 19V for 5 minutes	No
Battery Bank #4 Out of Range	B4	4B	Battery 4 below 11V or over 19V for 10 seconds.	Battery 4 between 11V and 19V for 5 minutes	No
Xing Activation over ~~5~~ 10 Min - High Speed	LH	CL	XR or HSR input low for ~~5~~ 10 minutes.	XR and HSR input high for 10 seconds.	Yes
Gate Not Up Properly	GU	GC	Gate Up indication is low and XR high for 3 minutes.	Gate Up indication high and XR high for 2 seconds.	Yes
Gate Not Down Properly	GD	GC	Gate Down indication(s) low and XR is low for 45 seconds.	Gate Down indication(s) is high and XR low for 2 seconds.	Yes
EGMS Vehicle Detector Health Alarm	EL	LE	VDHR input low for 10 seconds	VDHR input is high for 5 seconds	No
EGMS Long Term Obstruction Alarm	ET	TE	LTOR input low for 1 minute	LTOR input is high for 5 seconds	No
ITCS Health Alarm	IH	HI	ITCSXHR or ITCSXHSR low for 1 minute.	ITCSXHR and ITCSXHSR high for 5 seconds.	No

~~NEW SHEET~~

Designed: 2/25/15
TIER 3 PHASE 3
M.P.177.00 TO
M.P.160.00
HSR SCOPE CHANGE
Rec#: WO#:22820
IS: MWK/ /NST/JVJ

Designed: 08/21/12
TIER 3 PHASE 3
M.P.177.00 TO
M.P.160.00
UPGRADE XINGS AND
CP'S FOR HIGH
SPEED RAIL
Rec#: WO#: 22820
IS: /MWK
/NST/MJF

MODIFICATION LEVEL	
O. A. LAST LEVEL CHECKED	DU
LAST LEVEL MOD THIS TYPICAL	DU
LAST LEVEL BY DESIGNER	DU
CHANGED FROM TYPICAL?	Y

REV 01.24.11 4K ACDCCAR24.3

CIRCUIT MODIFICATIONS ARE NOT TO BE MADE WITHOUT AUTHORITY FROM THE OFFICE OF SIGNAL DESIGN

Date: 08/21/12
Des: NST
Chk: MWK
AFE: 22820

UNION PACIFIC RAILROAD
BROADWELL, ILLINOIS
TR 149A
SPRINGFIELD SUBDIVISION
Office of AVP Engineering-Signal Omaha, Nebraska

Sh.: 3
DOT 294261L
MP: 161.33
ID: CSL16133.3X

LEFT TOP

775

VOLTAGE MONITOR 520603-2V150A

RAILWAY EQUIPMENT CO.
MPLS, MN 763-972-2200

PASSWORD		The Password to adjust parameters is 5.
MAX VCH1	SET ---- . ---	High voltage setpoint for channel one.
LOW VCH1	SET ---- . ---	Low voltage setpoint for channel one.
DELAY CH1	SET ---------	Delay time in sec. before a fault is set for ch. one.
MAX VCH2	SET ---- . ---	High voltage setpoint for channel two.
LOW VCH2	SET ---- . ---	Low voltage setpoint for channel two.
HIGH AMP	SET ---------	High current setpoint for channel two.
LOW AMP	SET ---------	Low current setpoint for channel two.
HIGH TEMP	SET ---------	High temp. setpoint for channel two.
LOW TEMP	SET ---------	Low temp. setpoint for channel two.
DELAY CH2	SET ---------	Delay time in sec. before a fault is set for ch. two.

MENU OPERATION: Depressing the MODE button will move through all screens. Depressing the INCREASE or DECREASE button will increase or decrease the desired value

LOW VOLTAGE SETPOINT IS TO BE SET AT 11 VOLTS.

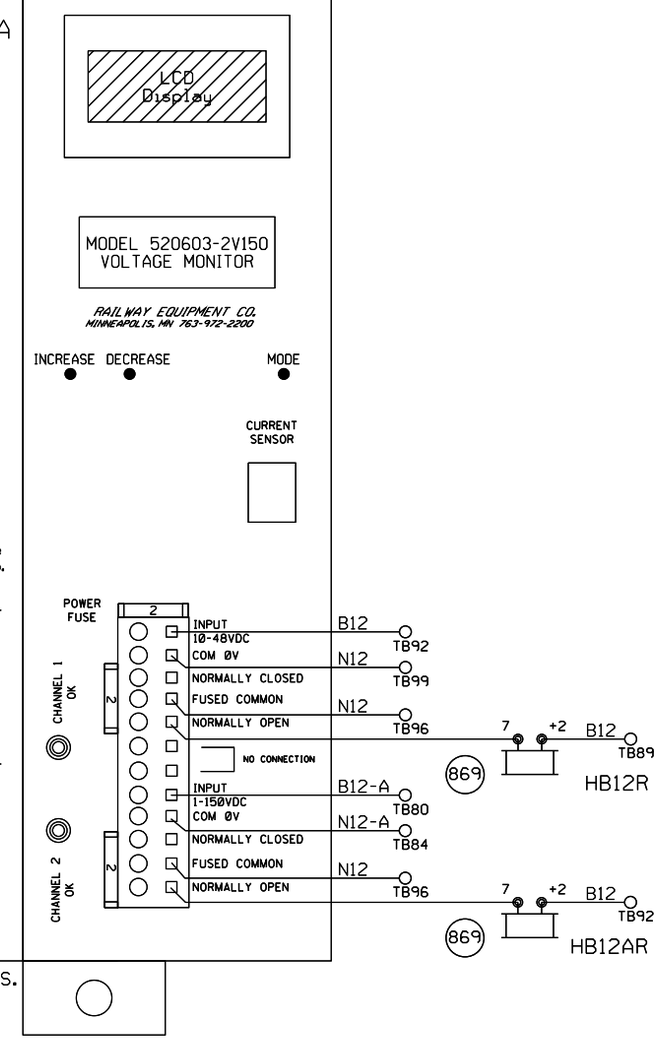

NEW SHEET

							Designed: 08/21/12 TIER 3 PHASE 3 M.P.177.00 TO M.P.160.00 UPGRADE XINGS AND CP'S FOR HIGH SPEED RAIL Rec#: WO#: 22820 IS: /MWK / /NST/MJF	CIRCUIT MODIFICATIONS ARE NOT TO BE MADE WITHOUT AUTHORITY FROM THE OFFICE OF SIGNAL DESIGN	Date: 08/21/12 Des: NST Chk: MWK AFE: 22820	UNION PACIFIC RAILROAD BROADWELL, ILLINOIS TR 149A SPRINGFIELD SUBDIVISION Office of AVP Engineering-Signal Omaha, Nebraska	Sh.: 4 DOT 294261L MP: 161.33 ID: CSL16133.4X

NOTE:

THIS DRAWING WAS DESIGNED FOR A SPECIFIC APPLICATION. IF A MODIFICATION OR REDESIGN OF THIS DRAWING CAUSES ANY MODULES TO CHANGE, THE UNIT'S PART NUMBER MUST BE CHANGED TO CORRESPOND ACCORDINGLY.

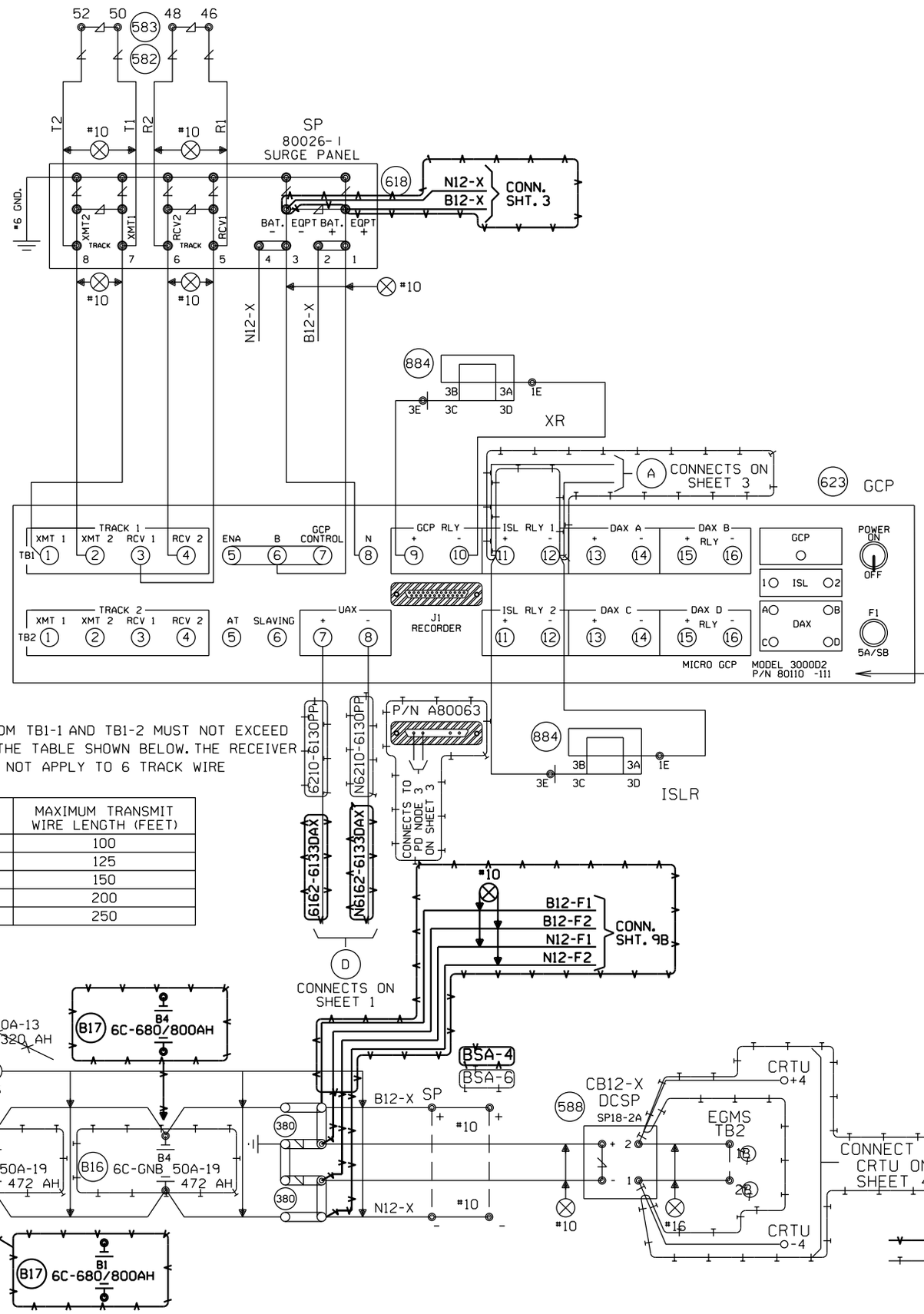

NOTE:

EACH TRANSMITTER TO RAIL WIRE FROM TB1-1 AND TB1-2 MUST NOT EXCEED THE MAXIMUM LENGTH SPECIFIED IN THE TABLE SHOWN BELOW. THE RECEIVER WIRE LENGTH IS NOT CRITICAL. DOES NOT APPLY TO 6 TRACK WIRE APPLICATION.

"Mf" FREQUENCY (HZ)	MAXIMUM TRANSMIT WIRE LENGTH (FEET)
86	100
114	125
156	150
211	200
285-970	250

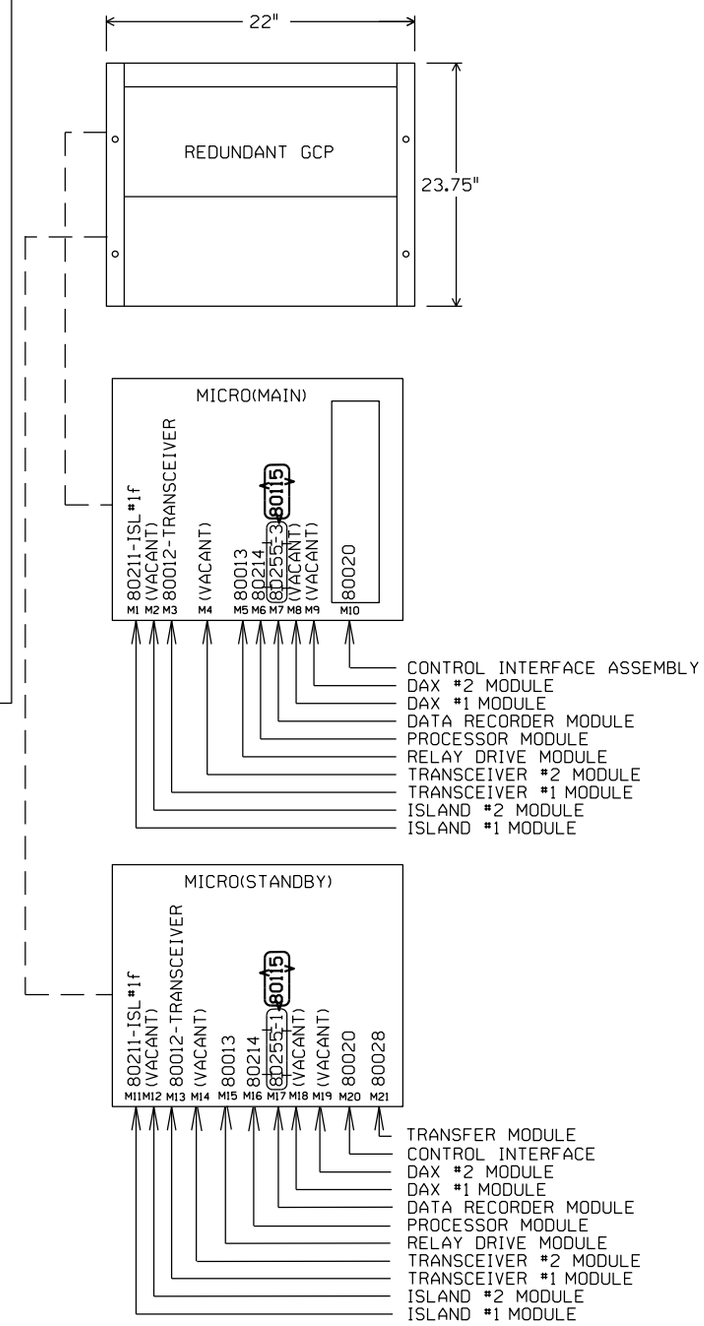

= IN

= OUT

BROADWELL, ILLINOIS
TR 149A
M.P. 161.30
SPRINGFIELD SUBDIVISION
D.O.T.#294 261L

Designed: 08/21/12
TIER 3 PHASE 3
M.P.177.00 TO M.P.160.00
UPGRADE XINGS AND CP'S FOR HIGH SPEED RAIL
Rec'd: W0#: 22820
IS: /MWK
/ /NST/MJF

02-24-09
INSTALL CONCENTRATOR RACK FOR XINGS
W.O. 87933 MAS

REV. 6-20-08
UPGRADED CROSSING PROTECTION FOR THE HIGH SPEED RAIL PROJ. FROM MAZONIA TO SPRINGFIELD
W.O. # 00183
REC. #15265
3-21-06 JJF
JM/WITT/WITT/JNM

MODIFICATION LEVEL	
Q.A. LAST LEVEL CHK'D.	DA
LAST LEVEL MOD. THIS TYP.	CZ
LAST LEVEL BY DESIGNER.	DD
CHANGED FROM TYP.? Y/N	Y

CIRCUIT MODIFICATIONS ARE NOT TO BE MADE WITHOUT AUTHORITY FROM THE OFFICE OF SIGNAL DESIGN

DES: WITT.IND.
DIG: WITT.IND.
CHK: J.J.F.
A.F.E. 00183
ID= CSL16130.5X

UNION PACIFIC RAILROAD
BLOOMINGTON, ILLINOIS TO VALLEY JCT., ILLINOIS
C.T.C. CIRCUITS
Office of AVP Engineering-Signal OMAHA NEBR.

DATE 4-1-02
SHEET 5
DWG 161.30
RTE-CSL

(REV. 7-9-00)(3K1TKBG.DGN)

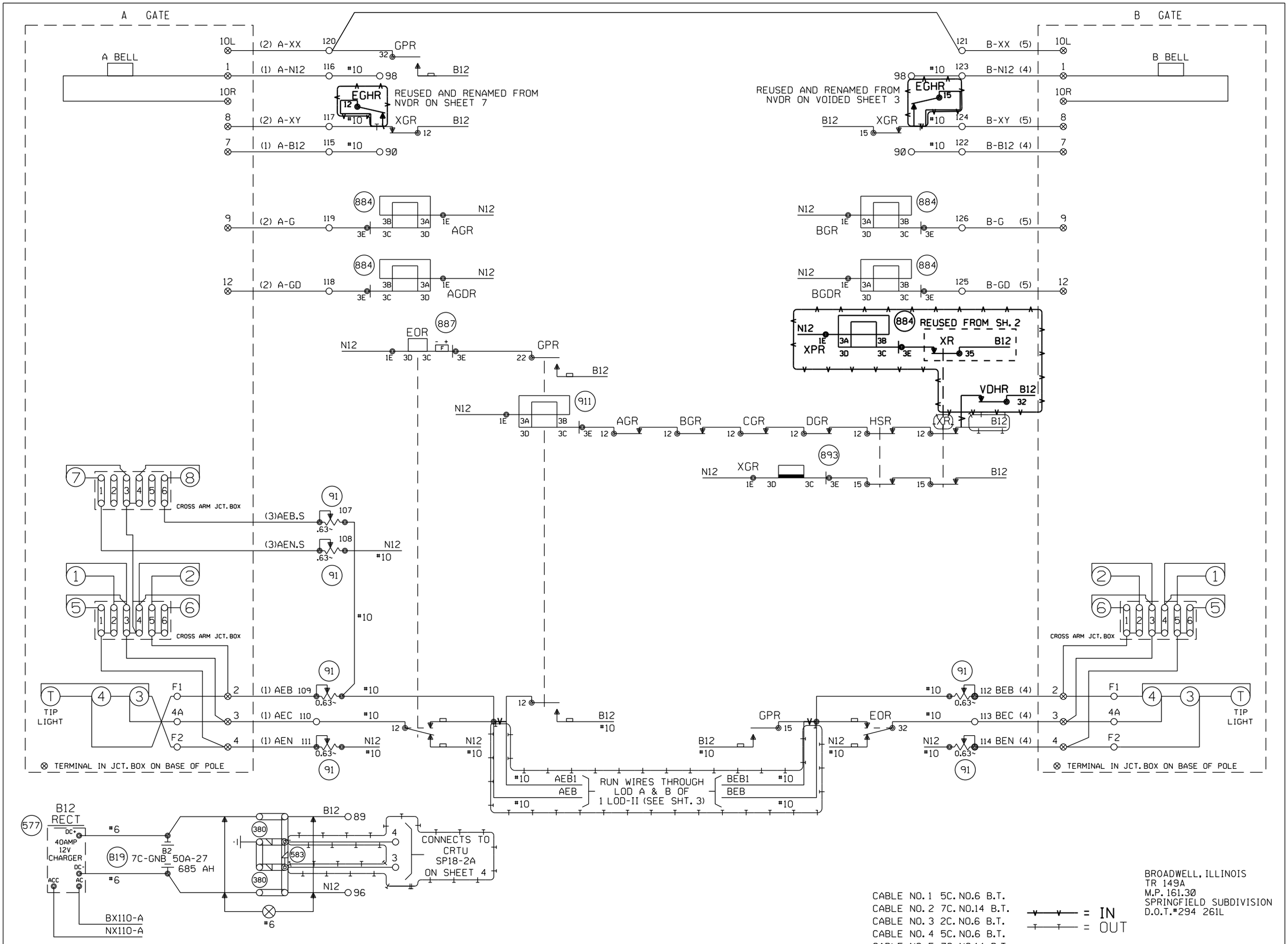

CABLE NO. 1 5C. NO.6 B.T.
CABLE NO. 2 7C. NO.14 B.T.
CABLE NO. 3 2C. NO.6 B.T.
CABLE NO. 4 5C. NO.6 B.T.
CABLE NO. 5 7C. NO.14 B.T.

= IN
= OUT

BROADWELL, ILLINOIS
TR 149A
M.P. 161.30
SPRINGFIELD SUBDIVISION
D.O.T.#294 261L

Designed: 08/21/12
TIER 3 PHASE 3
M.P.177.00 TO M.P.160.00
UPGRADE XINGS AND CP'S FOR HIGH SPEED RAIL
Rec#: WO#: 22820
IS: /MWK / /NST/MJF

REV. 6-20-08
UPGRADED CROSSING PROTECTION FOR THE HIGH SPEED RAIL PROJ. FROM MAZONIA TO SPRINGFIELD
W.O.# 00183
REC. #15265
3-21-06 JJF
JM/WITT/WITT/JNM

MODIFICATION LEVEL	
Q.A. LAST LEVEL CHK'D.	DA
LAST LEVEL MOD. THIS TYP.	CZ
LAST LEVEL BY DESIGNER.	DD
CHANGED FROM TYP.? Y/N	Y

CIRCUIT MODIFICATIONS ARE NOT TO BE MADE WITHOUT AUTHORITY FROM THE OFFICE OF SIGNAL DESIGN

DES: WITT.IND.
DIG: WITT.IND.
CHK: J.J.F.
A.F.E. 00183
ID= CSL16130.6X

UNION PACIFIC RAILROAD
BLOOMINGTON, ILLINOIS TO VALLEY JCT., ILLINOIS
C.T.C. CIRCUITS

Office of AVP Engineering-Signal OMAHA NEBR.

DATE 4-1-02
SHEET 6
DWG 161.30
RTE-CSL

(REV. 7-9-00) (4GTYP.5)

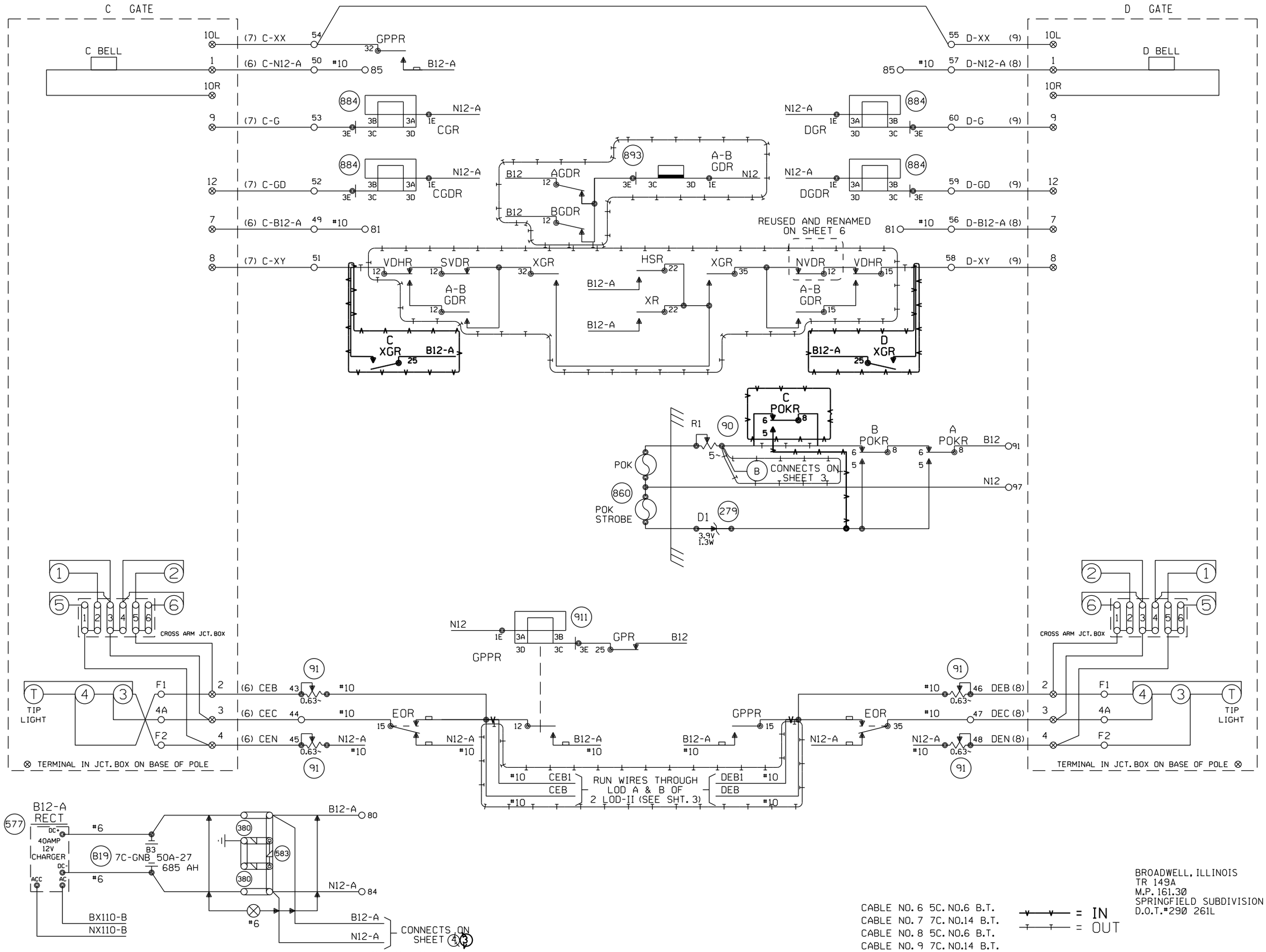

Designed: 08/21/12
TIER 3 PHASE 3
M.P.177.00 TO M.P.160.00
UPGRADE XINGS AND CP'S FOR HIGH SPEED RAIL
Rec#: WO#: 22820
IS: /MWK /NST/MJF

REV. 6-20-08
UPGRADED CROSSING PROTECTION FOR THE HIGH SPEED RAIL PROJ. FROM MAZONIA TO SPRINGFIELD
W.O. # 00183
REC. #15265
3-21-06 JJF
JM/WITT/WITT/JNM

MODIFICATION LEVEL	
Q.A. LAST LEVEL CHK'D.	DA
LAST LEVEL MOD. THIS TYP.	CZ
LAST LEVEL BY DESIGNER.	DD
CHANGED FROM TYP.? Y/N	Y

CIRCUIT MODIFICATIONS ARE NOT TO BE MADE WITHOUT AUTHORITY FROM THE OFFICE OF SIGNAL DESIGN

DES: WITT.IND.
DIG: WITT.IND.
CHK: J.J.F.
A.F.E. 00183
ID= CSL16130.7X

UNION PACIFIC RAILROAD
BLOOMINGTON, ILLINOIS TO VALLEY JCT., ILLINOIS
C.T.C. CIRCUITS
Office of AVP Engineering-Signal OMAHA NEBR.

DATE 4-1-02
SHEET 7
DWG 161.30
RTE-CSL

(REV. 7-9-00) (4GTYP.6)

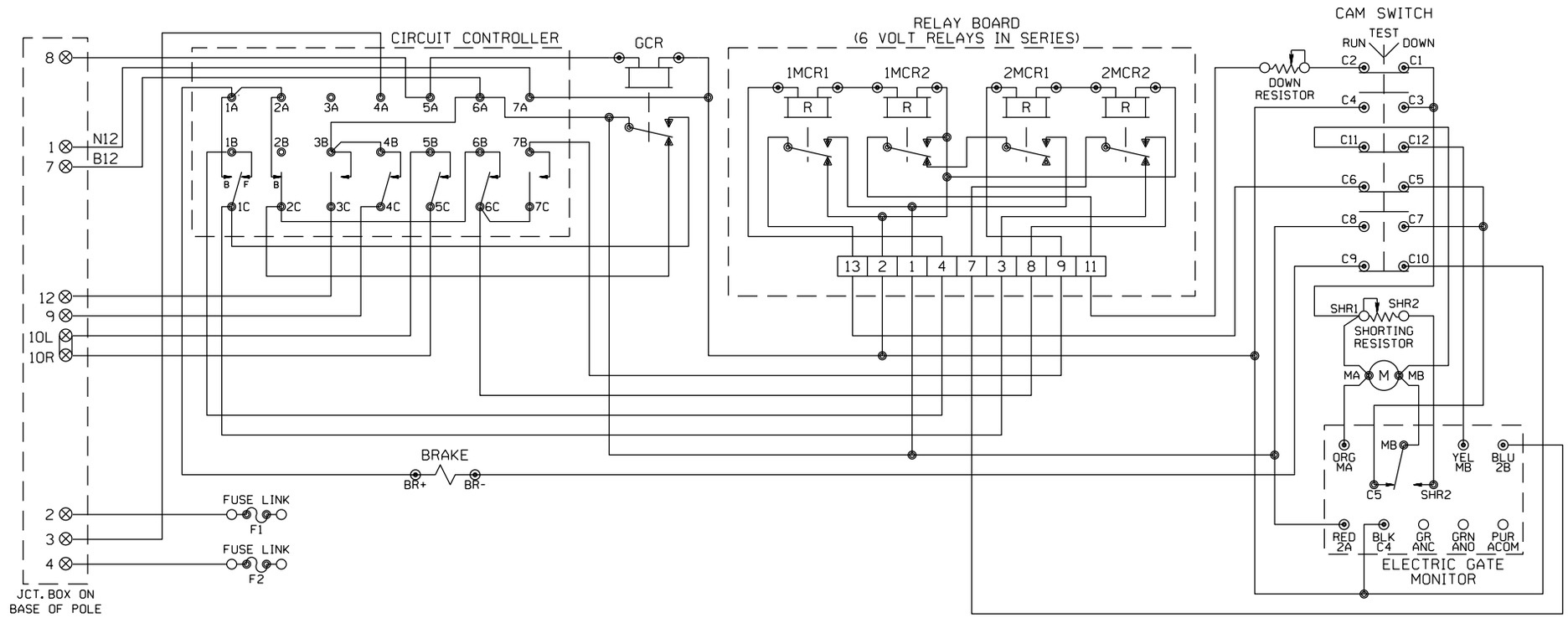

FOR WIRING GATES "C" AND "D"

WCH 3597 EXIT GATE

CONTACT	CLOSED	FUNCTION
1F	90-2	POWER DOWN
1B	2-0	ENGAGE BRAKE DOWN
2B	86-90	ENGAGE BRAKE UP
3	0-10	GATE DOWN
4	82-90	GATE CLEAR
5	10-90	BELL
6	60-90	POWER UP
7	0-75	DROP POWER UP

MECHANISM SHOWN IN CLEAR POSITION

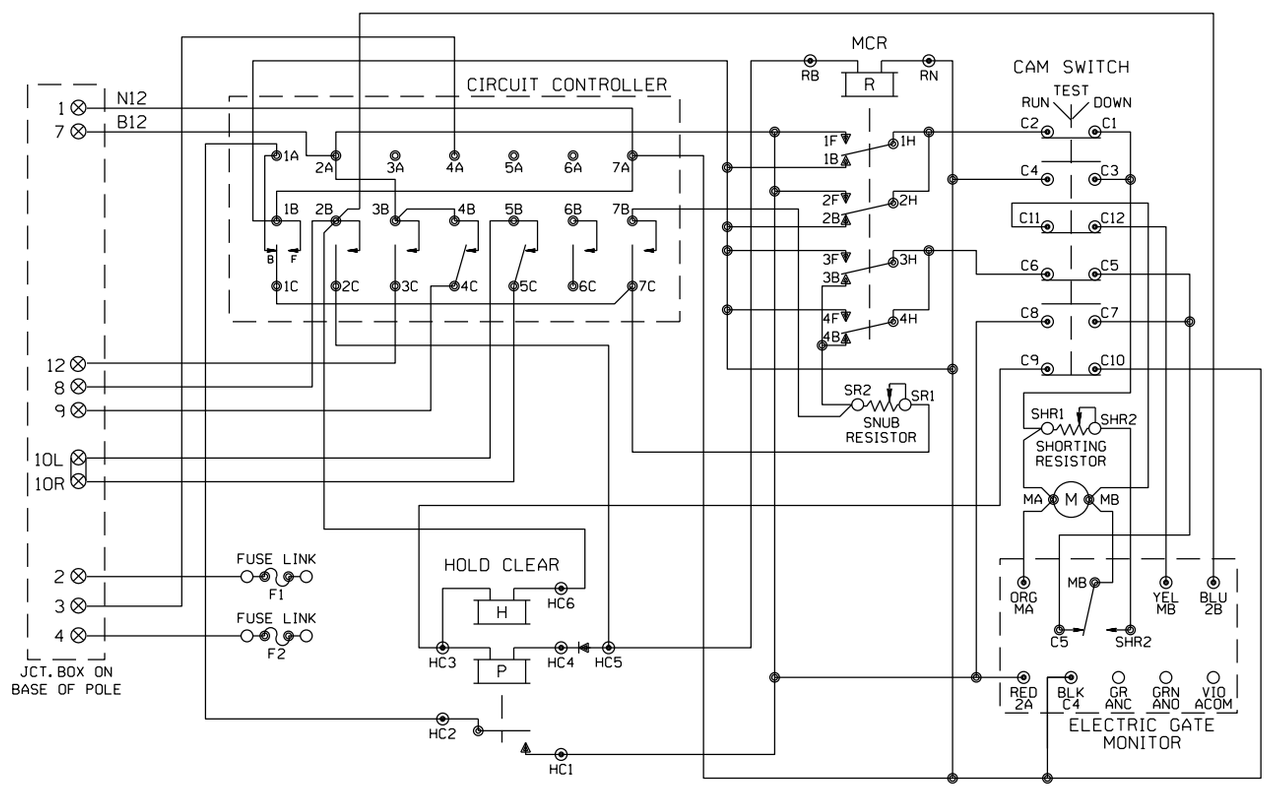

WCH 3597 ENTRANCE GATE

CONTACT	CLOSED	FUNCTION
1B	75-90	POWER DOWN
1F	0-70	SNUB DOWN
2	0-86	POWER UP
3	0-10	GATE DOWN
4	82-90	GATE CLEAR
5	10-90	BELL
6	SPARE	SPARE
7	0-10	SNUB

MECHANISM SHOWN IN CLEAR POSITION

FOR WIRING GATES "A" AND "B"

BROADWELL, ILLINOIS
TR 149A
M.P. 161.30
SPRINGFIELD SUBDIVISION
D.O.T.#294 261L

REV. 6-20-08
UPGRADED CROSSING PROTECTION FOR THE HIGH SPEED RAIL PROJ. FROM MAZONIA TO SPRINGFIELD
W.O. # 00183
REC. #15265
3-21-06 JJF
JM/WITT/WITT/JNM

MODIFICATION LEVEL	
Q.A. LAST LEVEL CHK'D.	DA
LAST LEVEL MOD. THIS TYP.	CZ
LAST LEVEL BY DESIGNER.	DD
CHANGED FROM TYP.? Y/N	Y

CIRCUIT MODIFICATIONS ARE NOT TO BE MADE WITHOUT AUTHORITY FROM THE OFFICE OF SIGNAL DESIGN

DES: WITT.IND.
DIG: WITT.IND.
CHK: J.J.F.
A.F.E. 00183
ID= CSL16130.8X

UNION PACIFIC RAILROAD
BLOOMINGTON, ILLINOIS TO VALLEY JCT., ILLINOIS
C.T.C. CIRCUITS
Office of AVP Engineering-Signal OMAHA NEBR.

DATE 4-1-02
SHEET 8
DWG 161.30
RTE-CSL

(REV. 7-9-00) (GWIRING.DGN)

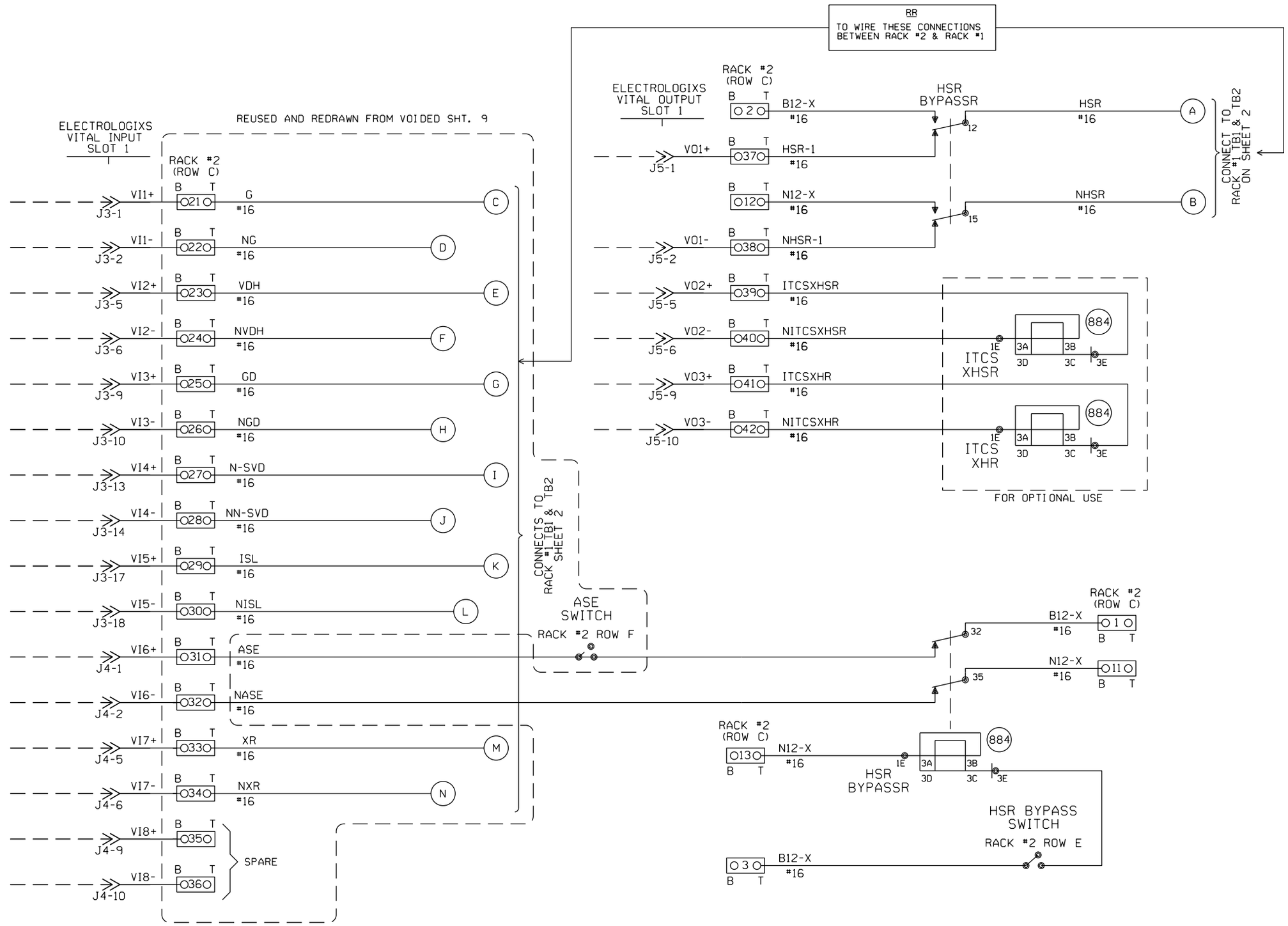

NOTES:
1. INPUT WIRES, OUTPUT WIRES, POWER WIRES, PUT IN SEPARATE BUNDLES.
2. ALL WIRES #16 UNLESS NOTED.
3. [O?? O] 2 POSITION WAGO BLOCK.

NEW SHEET

							Designed: 08/21/12 TIER 3 PHASE 3 M.P.177.00 TO M.P.160.00 UPGRADE XINGS AND CP'S FOR HIGH SPEED RAIL Rec#: WO#: 22820 /MWK IS: / /NST/MJF	CIRCUIT MODIFICATIONS ARE NOT TO BE MADE WITHOUT AUTHORITY FROM THE OFFICE OF SIGNAL DESIGN	Date: 08/21/12	UNION PACIFIC RAILROAD	Sh.: 9
									Des: NST	BROADWELL, ILLINOIS	DOT 294261L
									Chk: MWK	TR 149A	MP: 161.33
									AFE: 22820	SPRINGFIELD SUBDIVISION	ID: CSL16133.9X
										Office of AVP Engineering - Signal Omaha, Nebraska	

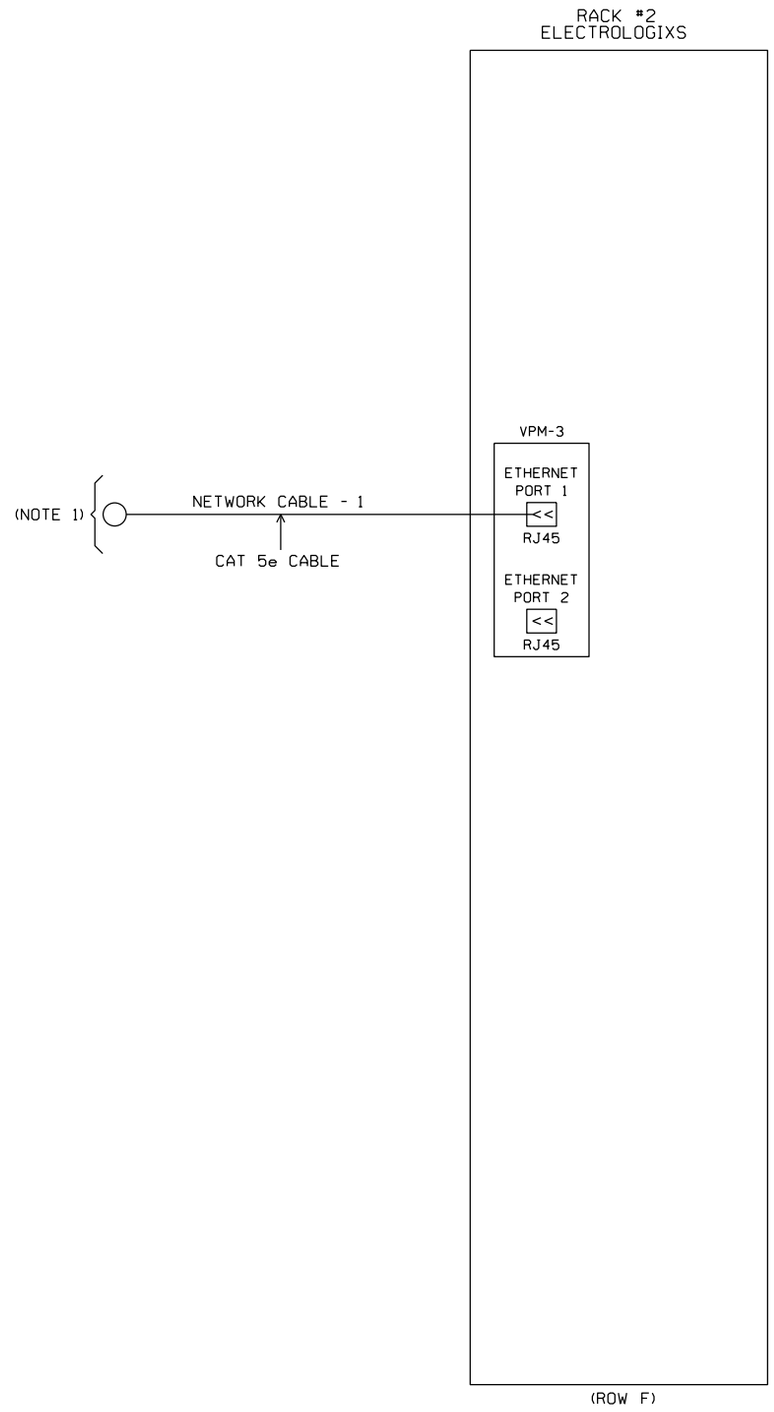

NOTES:
1. NETWORK SWITCH INSTALLED BY RR.

NEW SHEET

							Designed: 08/21/12 TIER 3 PHASE 3 M.P. 177.00 TO M.P. 160.00 UPGRADE XINGS AND CP'S FOR HIGH SPEED RAIL Rec#: WO#: 22820 IS: /MWK / /NST/MJF	CIRCUIT MODIFICATIONS ARE NOT TO BE MADE WITHOUT AUTHORITY FROM THE OFFICE OF SIGNAL DESIGN	Date: 08/21/12 Des: NST Chk: MWK AFE: 22820	UNION PACIFIC RAILROAD BROADWELL, ILLINOIS TR 149A SPRINGFIELD SUBDIVISION Office of AVP Engineering - Signal Omaha, Nebraska	Sh.: 9A DOT 294261L MP: 161.33 ID: CSL16133.9AX

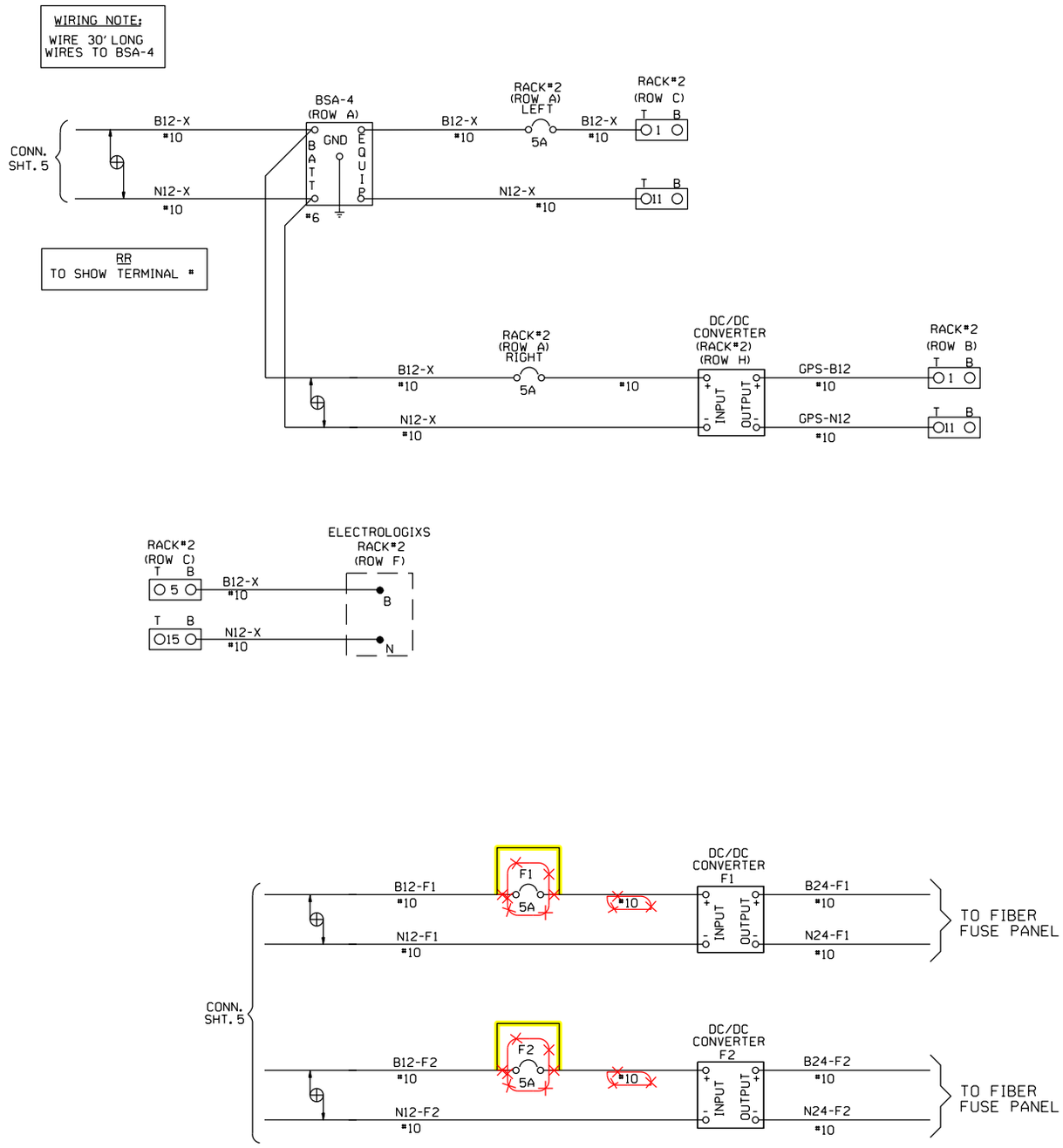

						Designed: 2/25/15 TIER 3 PHASE 3 M.P.177.00 TO M.P.160.00 HSR SCOPE CHANGE Rec#: WO#:22820 IS: MWK/ / /NST/JVJ	Designed: 08/21/12 TIER 3 PHASE 3 M.P. 177.00 TO M.P. 160.00 UPGRADE XINGS AND CP'S FOR HIGH SPEED RAIL Rec#: WO#:22820 IS: /MWK / /NST/MJF	CIRCUIT MODIFICATIONS ARE NOT TO BE MADE WITHOUT AUTHORITY FROM THE OFFICE OF SIGNAL DESIGN	Date: 08/21/12 Des: NST Chk: MWK AFE: 22820	UNION PACIFIC RAILROAD BROADWELL, ILLINOIS TR 149A SPRINGFIELD SUBDIVISION Office of AVP Engineering - Signal Omaha, Nebraska	Sh.: 9B DOT 294261L MP: 161.33 ID: CSL16133.9BX

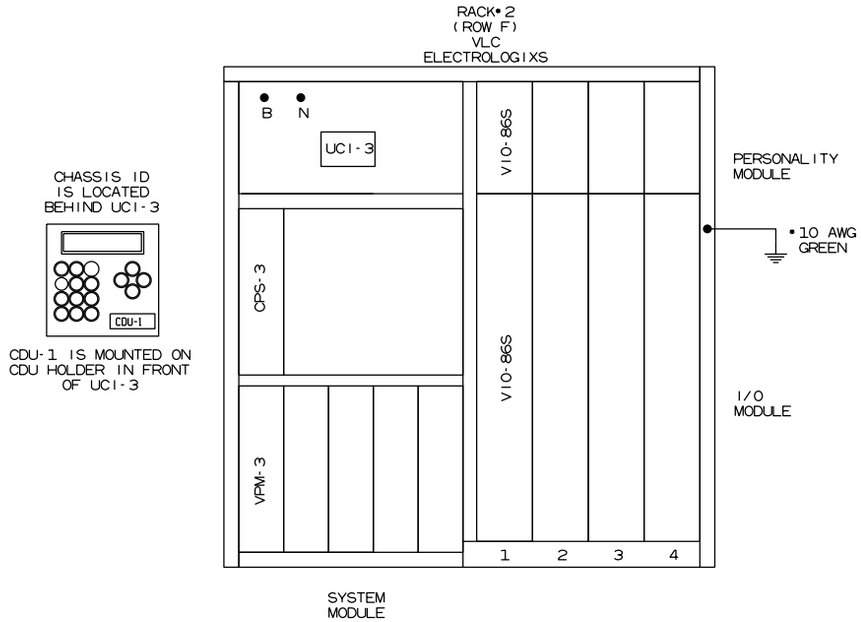

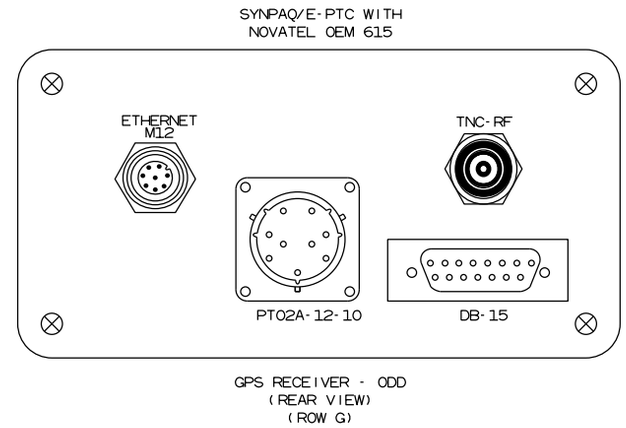

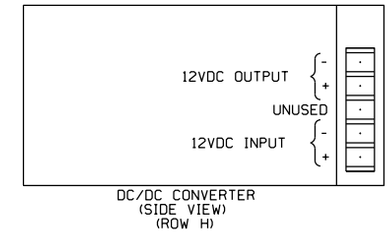

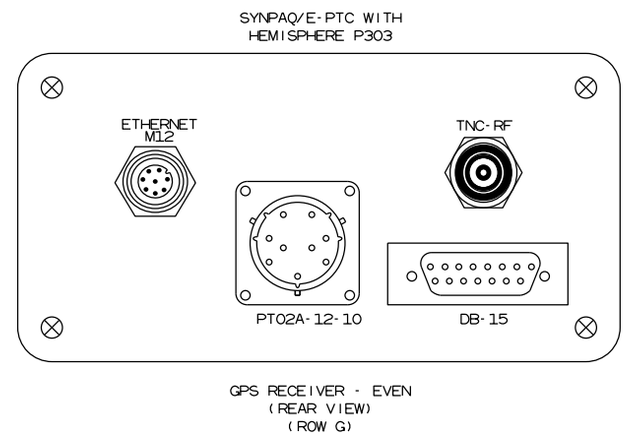

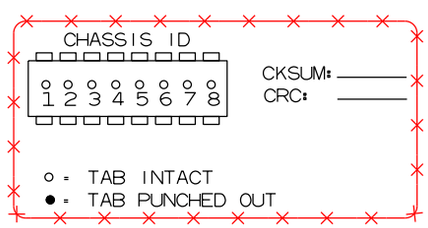

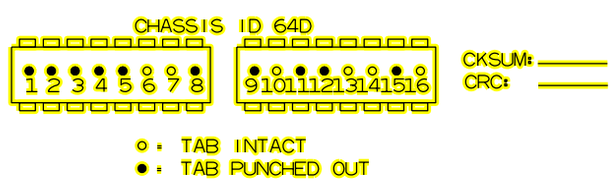

= IN
= OUT

NEW SHEET

						Designed: 2/25/15 TIER 3 PHASE 3 M.P.177.00 TO M.P.160.00 HSR SCOPE CHANGE Rec#: WO#: 22820 IS: MWK/ / /NST/JVJ	Designed: 08/21/12 TIER 3 PHASE 3 M.P. 177.00 TO M.P. 160.00 UPGRADE XINGS AND CP'S FOR HIGH SPEED RAIL Rec#: WO#: 22820 IS: /MWK / /NST/MJF	CIRCUIT MODIFICATIONS ARE NOT TO BE MADE WITHOUT AUTHORITY FROM THE OFFICE OF SIGNAL DESIGN	Date: 08/21/12 Des: NST Chk: MWK AFE: 22820	UNION PACIFIC RAILROAD BROADWELL, ILLINOIS TR 149A SPRINGFIELD SUBDIVISION Office of AVP Engineering - Signal Omaha, Nebraska	Sh.: 9C DOT 294261L MP: 161.33 ID: CSL16133.9CX