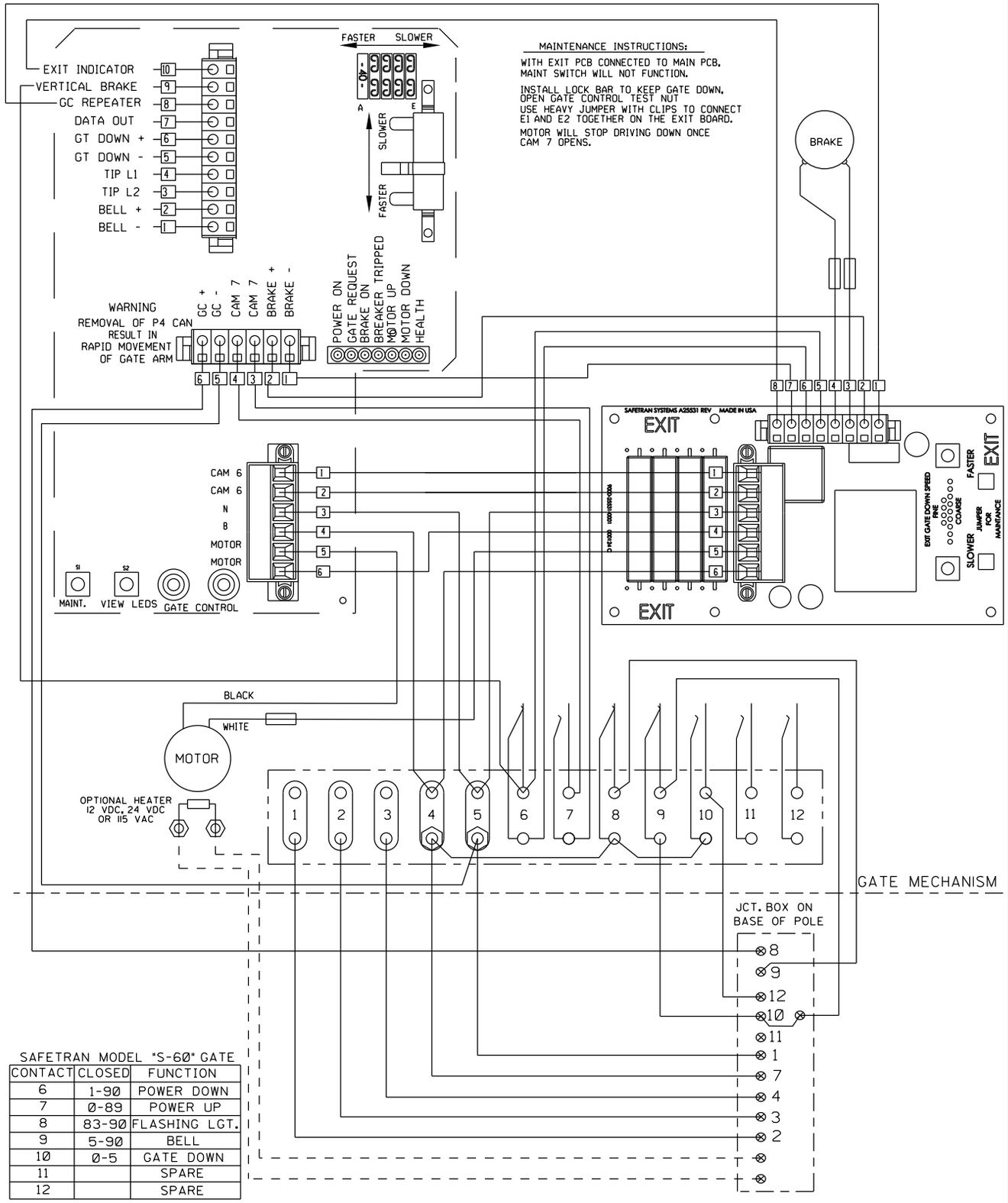

SAFETRAN MODEL "S-60" GATE

CONTACT	CLOSED	FUNCTION
6	1-90	POWER DOWN
7	0-89	POWER UP
8	83-90	FLASHING LGT.
9	5-90	BELL
10	0-5	GATE DOWN
11		SPARE
12		SPARE

NOTE:
ALL WIRING FROM JUNCTION BOX BASE TO GATE, FLASHING LIGHTS AND BELL IS TO BE #10 AWG, UNLESS OTHERWISE NOTED.

S-60 EXIT GATE

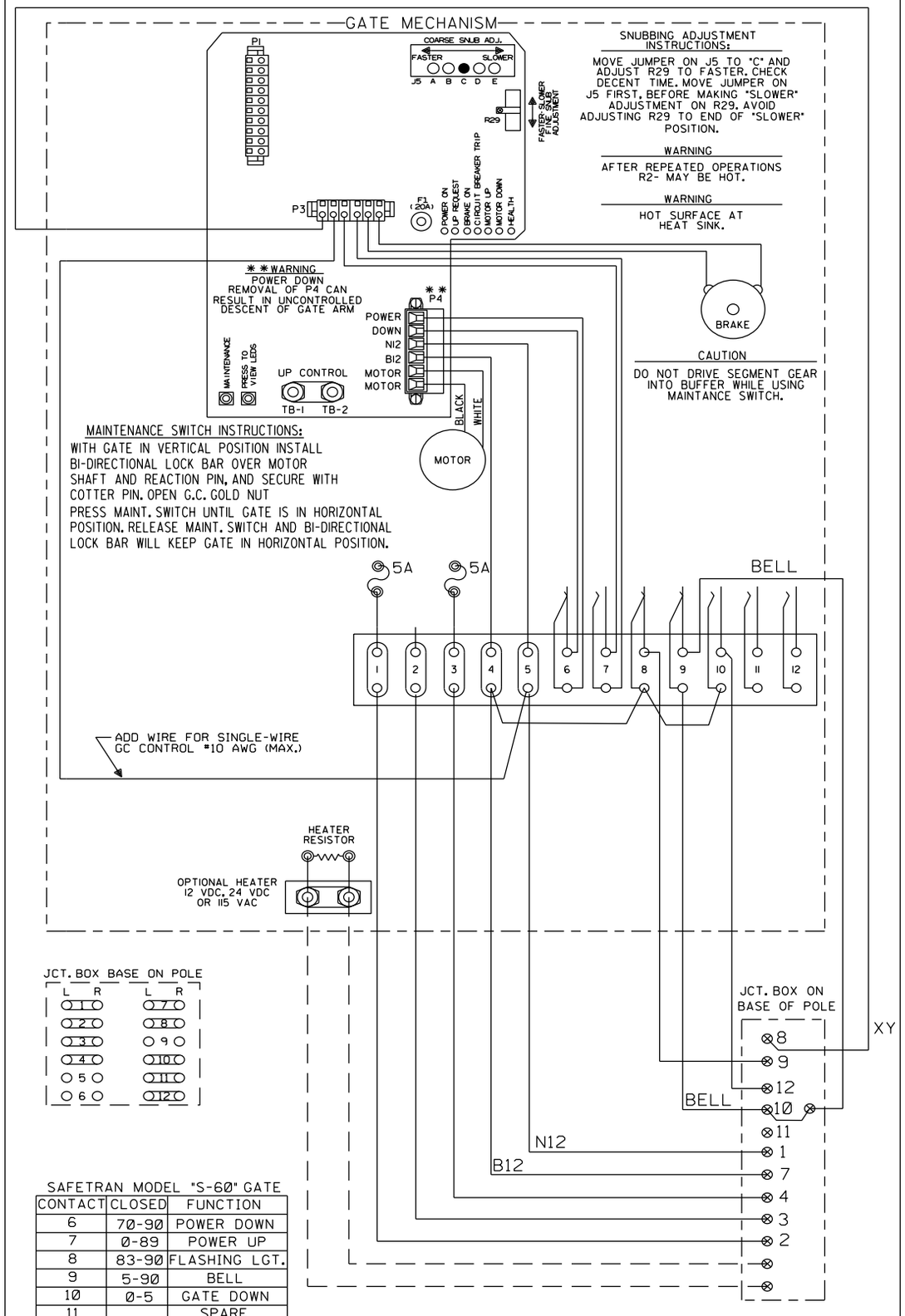

SAFETRAN MODEL "S-60" GATE

CONTACT	CLOSED	FUNCTION
6	70-90	POWER DOWN
7	0-89	POWER UP
8	83-90	FLASHING LGT.
9	5-90	BELL
10	0-5	GATE DOWN
11		SPARE
12		SPARE

NOTE:
ALL WIRING FROM JUNCTION BOX BASE TO GATE, FLASHING LIGHTS AND BELL IS TO BE #10 AWG, UNLESS OTHERWISE NOTED.

S-60 ENTRANCE GATE

NEW SHEET

Designed: 3/09/12
TIER 3 PHASE 1
M.P.202.30 TO M.P.194.80
UPGRADE XINGS TO 4 QUAD WITH EGMS, VARIOUS CP'S
Rec#: WO#: 14052
IS: MWK/ /NST/MJF

MODIFICATION LEVEL	
O. A. LAST LEVEL CHECKED	DU
LAST LEVEL MOD THIS TYPICAL	DU
LAST LEVEL BY DESIGNER	DU
CHANGED FROM TYPICAL?	N

REV 01.24.11 4K 2KEGMS S60GWIRING.7

CIRCUIT MODIFICATIONS ARE NOT TO BE MADE WITHOUT AUTHORITY FROM THE OFFICE OF SIGNAL DESIGN

Date: 03/09/12
Des: NST
Chk: MWK
AFE: 14052

UNION PACIFIC RAILROAD
AUBURN, ILLINOIS
MADISON STREET
SPRINGFIELD SUBDIVISION
Office of AVP Engineering - Signal Omaha, Nebraska

Sh.: 8
DOT 294346N
MP: 200.63
ID: CSL20063.8X

WCH 3593-E

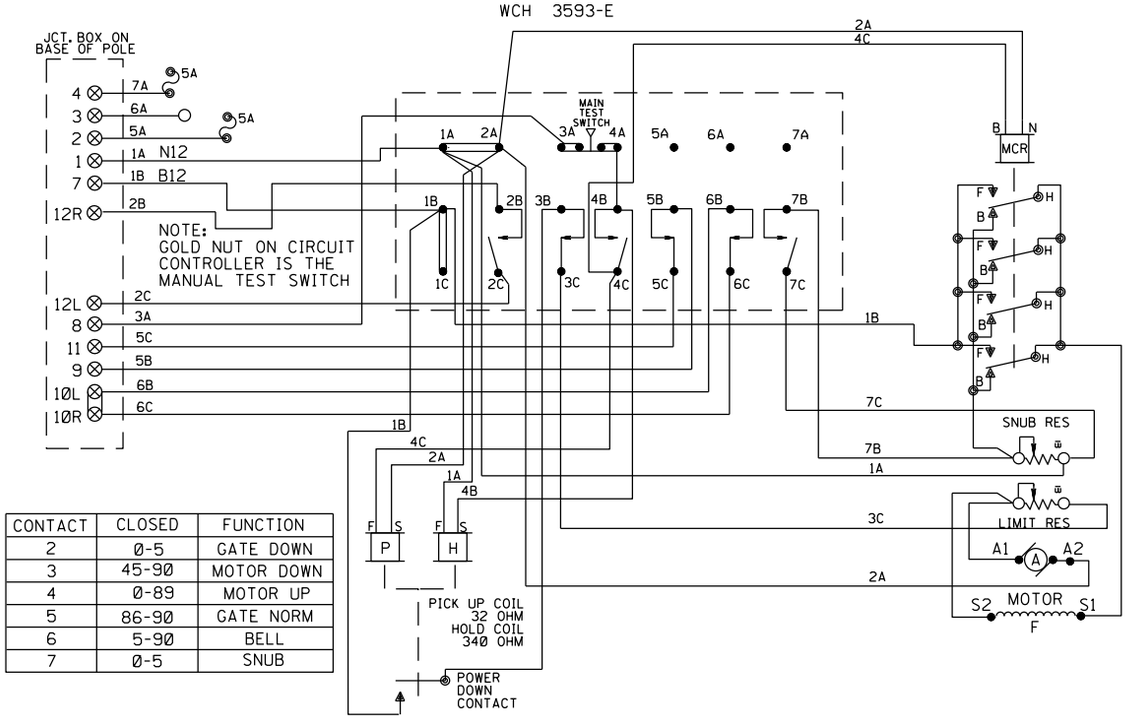

CONTACT	CLOSED	FUNCTION
2	0-5	GATE DOWN
3	45-90	MOTOR DOWN
4	0-89	MOTOR UP
5	86-90	GATE NORM
6	5-90	BELL
7	0-5	SNUB

WCH 3597-E

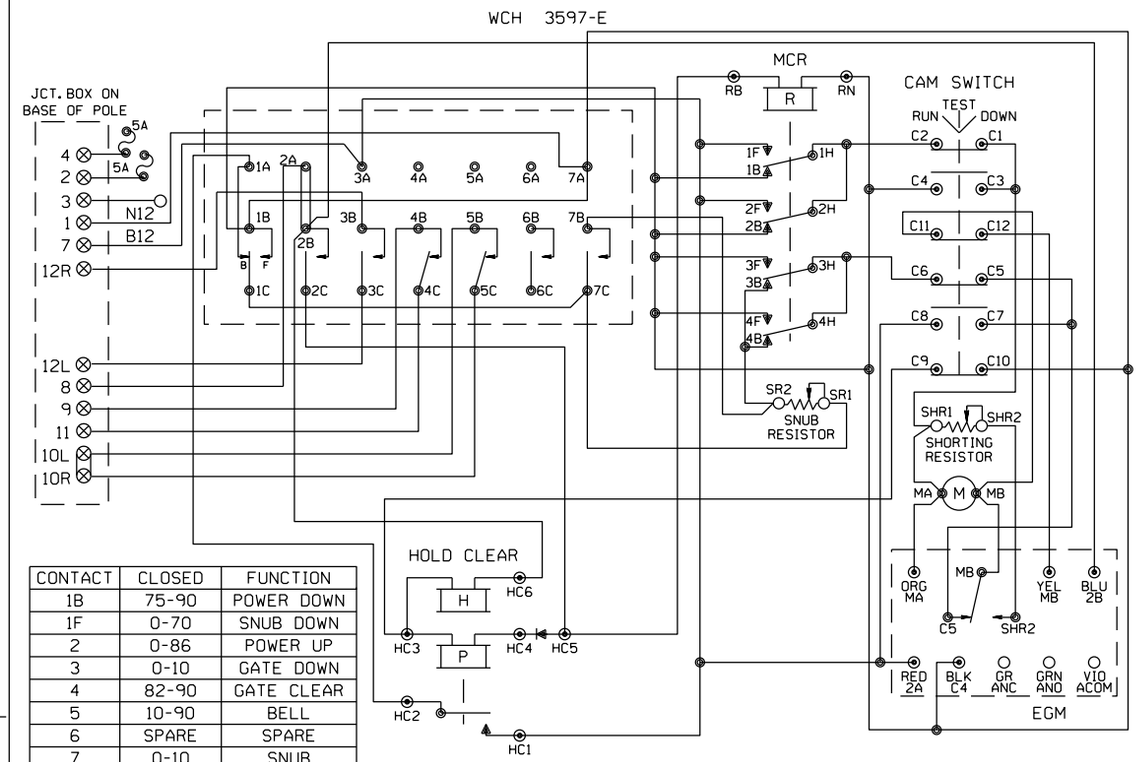

CONTACT	CLOSED	FUNCTION
1B	75-90	POWER DOWN
1F	0-70	SNUB DOWN
2	0-86	POWER UP
3	0-10	GATE DOWN
4	82-90	GATE CLEAR
5	10-90	BELL
6	SPARE	SPARE
7	0-10	SNUB

WCH 3597-RB

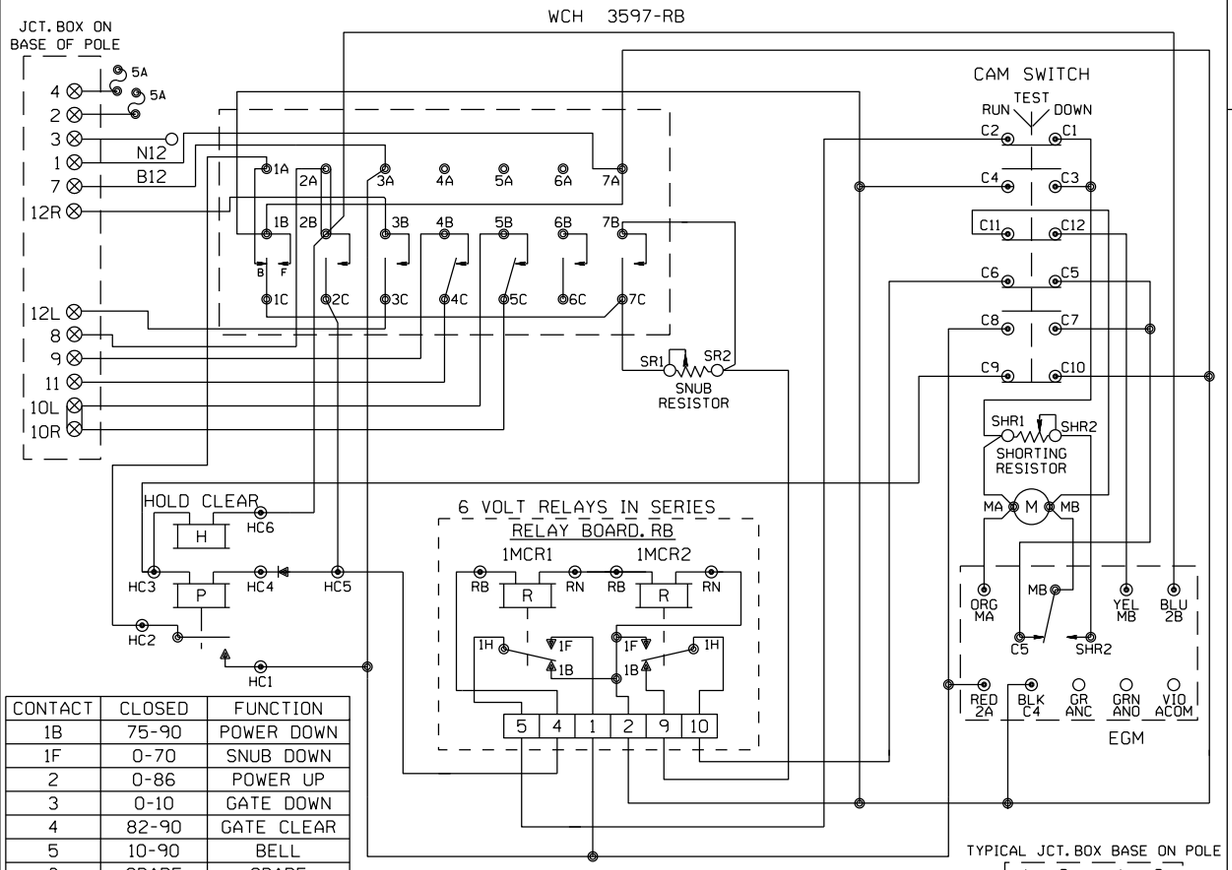

CONTACT	CLOSED	FUNCTION
1B	75-90	POWER DOWN
1F	0-70	SNUB DOWN
2	0-86	POWER UP
3	0-10	GATE DOWN
4	82-90	GATE CLEAR
5	10-90	BELL
6	SPARE	SPARE
7	0-10	SNUB

TYPICAL JCT. BOX BASE ON POLE

SHOW TYPE MECH. INSTALLED

ALL MECHANISM SHOWN IN CLEAR POSITION

SAFETRAN S-60

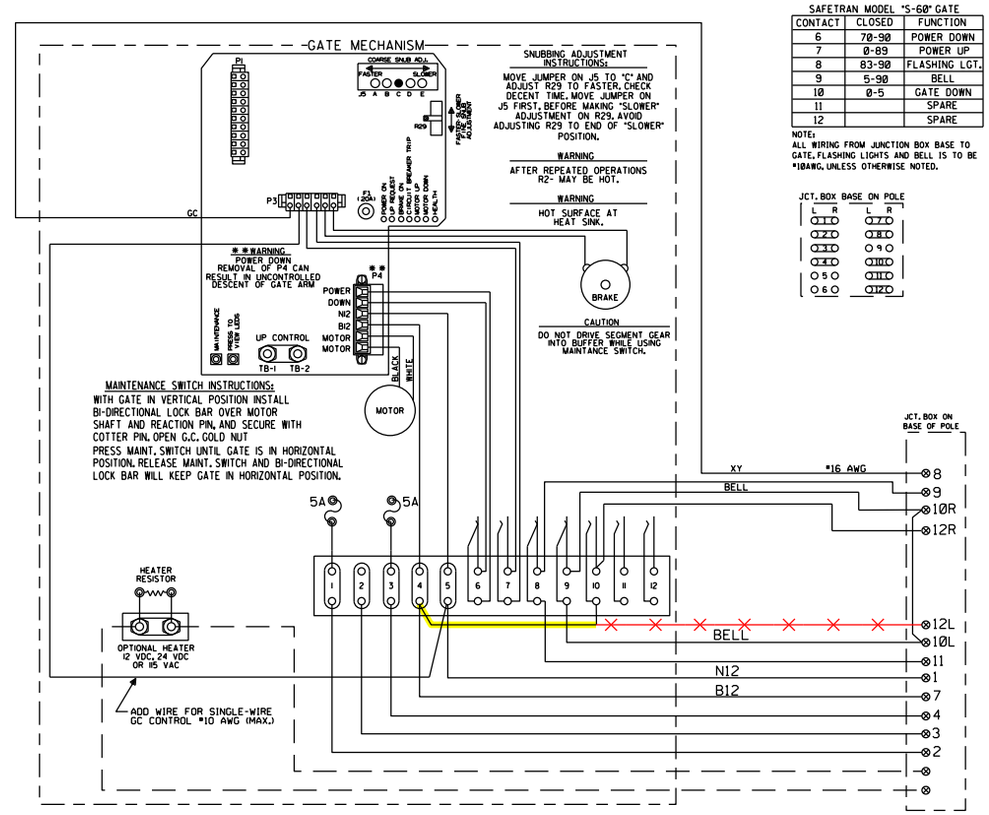

SAFETRAN MODEL "S-60" GATE

CONTACT	CLOSED	FUNCTION
6	70-90	POWER DOWN
7	0-89	POWER UP
8	83-90	FLASHING LGT.
9	5-90	BELL
10	0-5	GATE DOWN
11		SPARE
12		SPARE

NOTE: ALL WIRING FROM JUNCTION BOX BASE TO GATE, FLASHING LIGHTS AND BELL IS TO BE #10AWG. UNLESS OTHERWISE NOTED.

JCT. BOX BASE ON POLE

FOR WIRING GATES "E" & "F"

= IN
= OUT

NEW SHEET

Designed: 09/25/14 TIER 3 PHASE 1 M.P.202.30 TO M.P.194.80 HSR SCOPE CHANGE Rec#: WO#: 14052 IS: / /NST/MJF	Designed: 3/09/12 TIER 3 PHASE 1 M.P.202.30 TO M.P.194.80 UPGRADE XINGS TO 4 QUAD WITH EGMS, VARIOUS CP'S Rec#: WO#: 14052 IS: MWK/ / /NST/MJF	MODIFICATION LEVEL	
		O. A. LAST LEVEL CHECKED	DU
		LAST LEVEL MOD THIS TYPICAL	DU
		LAST LEVEL BY DESIGNER	DU
		CHANGED FROM TYPICAL?	Y
		REV 01.24.11 4K 4GWIRING.8	

CIRCUIT MODIFICATIONS ARE NOT TO BE MADE WITHOUT AUTHORITY FROM THE OFFICE OF SIGNAL DESIGN

Date: 03/09/12
Des: NST
Chk: MWK
AFE: 14052

UNION PACIFIC RAILROAD

AUBURN, ILLINOIS
MADISON STREET
SPRINGFIELD SUBDIVISION

Office of AVP Engineering - Signal — Omaha, Nebraska

Sh.: 9
DOT 294346N
MP: 200.63
ID: CSL20063.9X

EGMS
PROGRAM INFORMATION

PROGRAM VERSION 4.3 4.4

EGMS DISPLAY PARAMETERS

PARAMETER	
STARTUP LOGO	UPRR
BACKLIGHT TIMEOUT	015
BUZZER ENABLE	YES
DIRECTION INDICATORS	↓E ↑W
BUNGALOW QUAD	SB ENTER
DISPLAY QZI	NO
LOCAL PREFIX	'R'
REMOTE PREFIX	'T'
CROSSING NAME	MADISON STREET
CROSSING DESCRIPTION	4 QUAD PUB AT GRADE
CROSSING DOT #	294346N

EGMS ALARM PARAMETERS

PARAMETER	
GATO ALARM DELAY	000
GATO GATE DELAY	000
MAX GATE RELEASE	09.0 •
MAX GATE RESPONSE	03.0 •
CYCLE RESTORE	001
MTCD PRESENCE	000
DET FAIL ALARM	YES
DET RESTORE DELAY	000
MAX DET FAILS	000
AUX IN 1 ENABLE	NO
AUX IN 1 RESTORE	000
AUX IN 2 ENABLE	NO
AUX IN 2 RESTORE	000
AUX IN 3 ENABLE	NO
AUX IN 3 RESTORE	000
AUX IN 4 ENABLE	NO
AUX IN 4 RESTORE	000

• ADJUST GATE RELEASE, AND RESPONSE TIMES IN FIELD BASED ON ACTUAL GATE OPERATIONS, AS NECESSARY.

EGMS OPERATIONAL PARAMETERS

PARAMETER	
PRIMARY MODE	DYNAMIC
SECONDARY MODE	NONE
DIS ENTR DETS	NO
DELAY ON DOWN	01.0
REV DET ENABLE	NO
DYNAMIC EGCT	000
TIMED EGCT	012
ISLAND INHIBIT TIME	015
XR DET DISABLE	YES
BIDIR DELAY	04.0
DYN ENTRANCE MONITOR	YES
ENTRANCE DOWN REQ	YES
EXIT UP REQ	NO
EGH SENSE	B12 HOLDS
ISL 2 ENABLE	NO
DUAL EGMS ENABLED	NO

EGMS AUX OUTPUT MAPPING

PARAMETER	
AUX OUT 1 FUNCTION	DET XRISL
AUX OUT 1 SOURCE	BOTH
AUX OUT 2 FUNCTION	DET HLTH
AUX OUT 2 SOURCE	BOTH
AUX OUT 3 FUNCTION	GP
AUX OUT 3 SOURCE	BOTH
AUX OUT 4 FUNCTION	~~ALARM~~ DET OBSTL
AUX OUT 4 SOURCE	~~BOTH~~

GATE PARAMETERS

GATE	1(A)	2(B)	3(C)	4(D)	5(E)	6(F)	7(G)	8(H)
GATE TYPE	ENTRANCE	ENTRANCE	EXIT	EXIT	NONE•	NONE•	NONE•	NONE•
GATE DIRECTION	↓E	↑W	↓E	↑W	↓S	↓S	↓S	↓S
VERTICAL CHATTER TIME	01.0	01.0	01.0	01.0	02.0	02.0	02.0	02.0
HORIZONTAL CHATTER TIME	01.0	01.0	01.0	01.0	02.0	02.0	02.0	02.0
MINIMUM ASCENT TIME	003	003	003	003	003	003	003	003
MAXIMUM ASCENT TIME	015	015	015	015	015	015	015	015
MINIMUM DESCENT TIME	003	003	003	003	003	003	003	003
MAXIMUM DESCENT TIME	015	015	015	015	015	015	015	015

• GATE TYPE = "NONE" ALL OTHER PARAMETERS IGNORED

DETECTOR PARAMETERS

	(1) E-1400				(2) E-1400				(3) E-1400				(4) E-1400			
DETECTOR	1	2	3	4	5	6	7	8	9	10	11	12	13	14	15	16
DETECTOR TYPE	ENTR	ENTR	EXIT	EXIT	NONE	NONE	NONE	NONE	NONE	NONE	NONE	NONE	NONE	NONE	NONE	NONE
DETECTOR DIRECTION	↓E	↑W	↓E	↑W	↓S	↑N	↓S	↓S	↓S	↓S	↓S	↓S	↓S	↓S	↓S	↓S
STRETCH TIME•	01.0	01.0	01.0	01.0	01.0	01.0	01.0	01.0	01.0	01.0	01.0	01.0	01.0	01.0	01.0	01.0
LONG-TERM OBSTRUCTION	001	001	001	001	000	000	000	000	000	000	000	000	000	000	000	000
DISABLE ON DOWN	NO	NO	NO	NO	NO	NO	NO	NO	NO	NO	NO	NO	NO	NO	NO	NO
AUX OUTPUT 1	YES	YES	YES	YES	YES	YES	YES	YES	YES	YES	YES	YES	YES	YES	YES	YES
AUX OUTPUT 2	YES	YES	YES	YES	YES	YES	YES	YES	YES	YES	YES	YES	YES	YES	YES	YES
AUX OUTPUT 3	YES	YES	YES	YES	YES	YES	YES	YES	YES	YES	YES	YES	YES	YES	YES	YES
AUX OUTPUT 4	YES	YES	YES	YES	YES	YES	YES	YES	YES	YES	YES	YES	YES	YES	YES	YES

• INCREASE STRETCH TIME AS NECESSARY TO MAINTAIN VEHICLE DETECTION FROM LOOP TO LOOP.
•• DETECTORS 5 - 16 DEFAULT TO "NONE" AND MUST BE CONFIGURED MANUALLY
DETECTORS 5 & 6 DEFAULT TO "INT" WHEN 2TK DEFAULT CONFIGURATION IS SELECTED.
WHEN DETECTOR TYPE IS "NONE", ALL OTHER PARAMETERS IGNORED.

= IN
= OUT

NEW SHEET

Designed: 09/25/14
TIER 3 PHASE 1
M.P.202.30 TO
M.P.194.80
HSR SCOPE CHANGE
Rec#: WO#: 14052
IS: / /NST/MJF

Designed: 3/09/12
TIER 3 PHASE 1
M.P.202.30 TO
M.P.194.80
UPGRADE XINGS TO
4 QUAD WITH EGMS,
VARIOUS CP'S
Rec#: WO#: 14052
IS: MWK/
/ /NST/MJF

MODIFICATION LEVEL	
O. A. LAST LEVEL CHECKED	DU
LAST LEVEL MOD THIS TYPICAL	DU
LAST LEVEL BY DESIGNER	DU
CHANGED FROM TYPICAL?	Y

REV 01.24.11 4K 2TKEGMS.8

CIRCUIT MODIFICATIONS ARE NOT TO BE MADE WITHOUT AUTHORITY FROM THE OFFICE OF SIGNAL DESIGN

Date: 03/09/12
Des: NST
Chk: MWK
AFE: 14052

UNION PACIFIC RAILROAD
AUBURN, ILLINOIS
MADISON STREET
SPRINGFIELD SUBDIVISION
Office of AVP Engineering - Signal Omaha, Nebraska

Sh.: 10
DOT 294346N
MP: 200.63
ID: CSL20063.10X

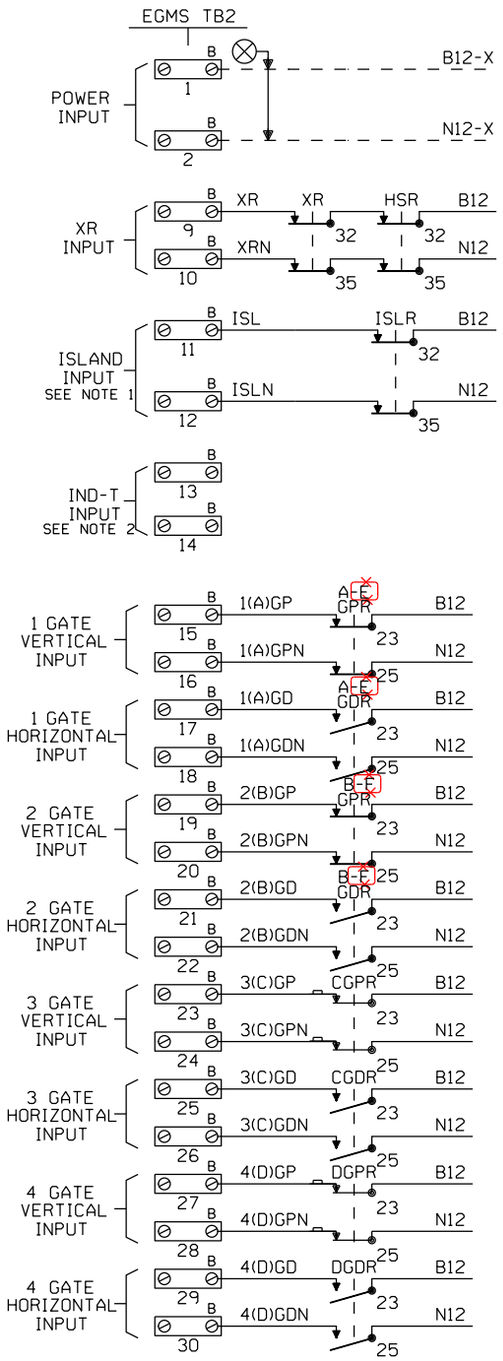

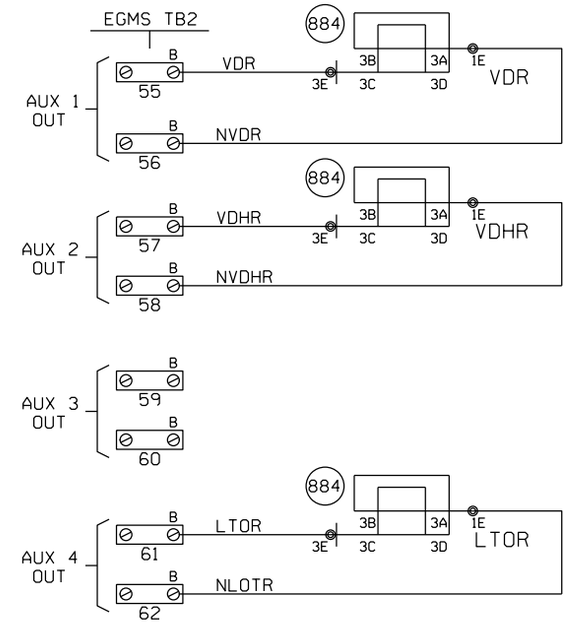

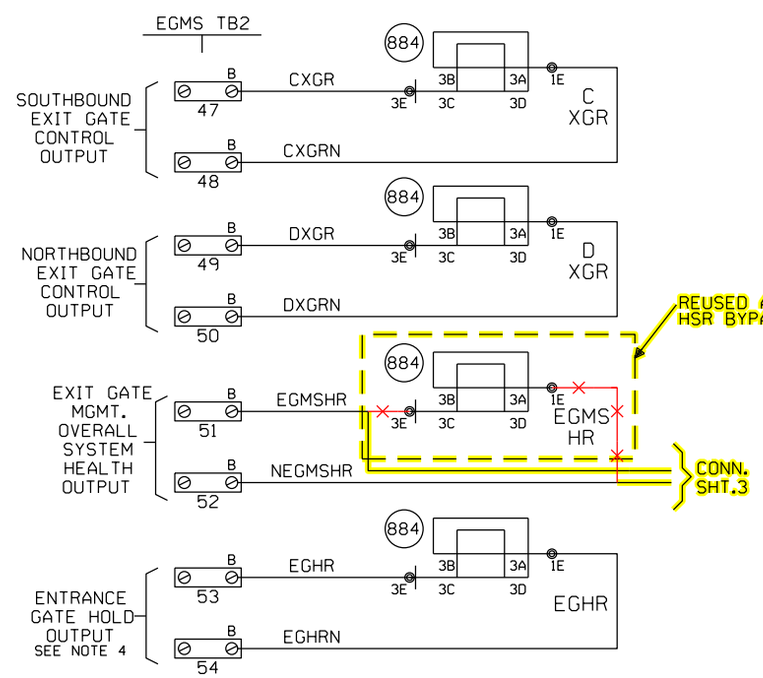

NOTES

1. EGMS ISL1 INPUT: "AND" ISLAND INPUTS FROM ALL TRACKS. NOTE THAT WHEN THIS INPUT IS DE-ENERGIZED THE XR INPUT ON TB2, 9 & 10 MUST ALSO BE DE-ENERGIZED BEFORE THE EXIT GATES MAY BE DRIVEN DOWN.
2. EGMS ISL2 INPUT: MAY BE USED FOR STAND ALONE ISLAND INPUT. THIS INPUT IS NOT DEPENDENT UPON THE STATUS OF XR INPUT ON TB2, 9 & 10. THIS INPUT MUST BE FIELD SELECTED AND ENABLED DURING EGMS SETUP.
3. ALL WIRING TO EGMS TO BE #16 AWG FLEX.
4. ENTRANCE GATE HOLD (EGH) CAN BE PROGRAMMED AS A NORMALLY ENERGIZED OR NORMALLY DE-ENERGIZED OUTPUT.

= IN
= OUT

NEW SHEET

Designed: 09/25/14
TIER 3 PHASE 1 M.P.202.30 TO M.P.194.80 HSR SCOPE CHANGE
Rec#: WO#: 14052
IS: / /NST/MJF

Designed: 3/09/12
TIER 3 PHASE 1 M.P.202.30 TO M.P.194.80 UPGRADE XINGS TO 4 QUAD WITH EGMS, VARIOUS CP'S
Rec#: WO#: 14052
IS: MWK/ / /NST/MJF

MODIFICATION LEVEL	
O. A. LAST LEVEL CHECKED	DU
LAST LEVEL MOD THIS TYPICAL	DU
LAST LEVEL BY DESIGNER	DU
CHANGED FROM TYPICAL?	Y

REV 01.24.11 4K 2TKEGMS.8A

CIRCUIT MODIFICATIONS ARE NOT TO BE MADE WITHOUT AUTHORITY FROM THE OFFICE OF SIGNAL DESIGN

Date: 03/09/12
Des: NST
Chk: MWK
AFE: 14052

UNION PACIFIC RAILROAD
AUBURN, ILLINOIS
MADISON STREET
SPRINGFIELD SUBDIVISION
Office of AVP Engineering - Signal Omaha, Nebraska

Sh.: 11
DOT 294346N
MP: 200.63
ID: CSL20063.11X

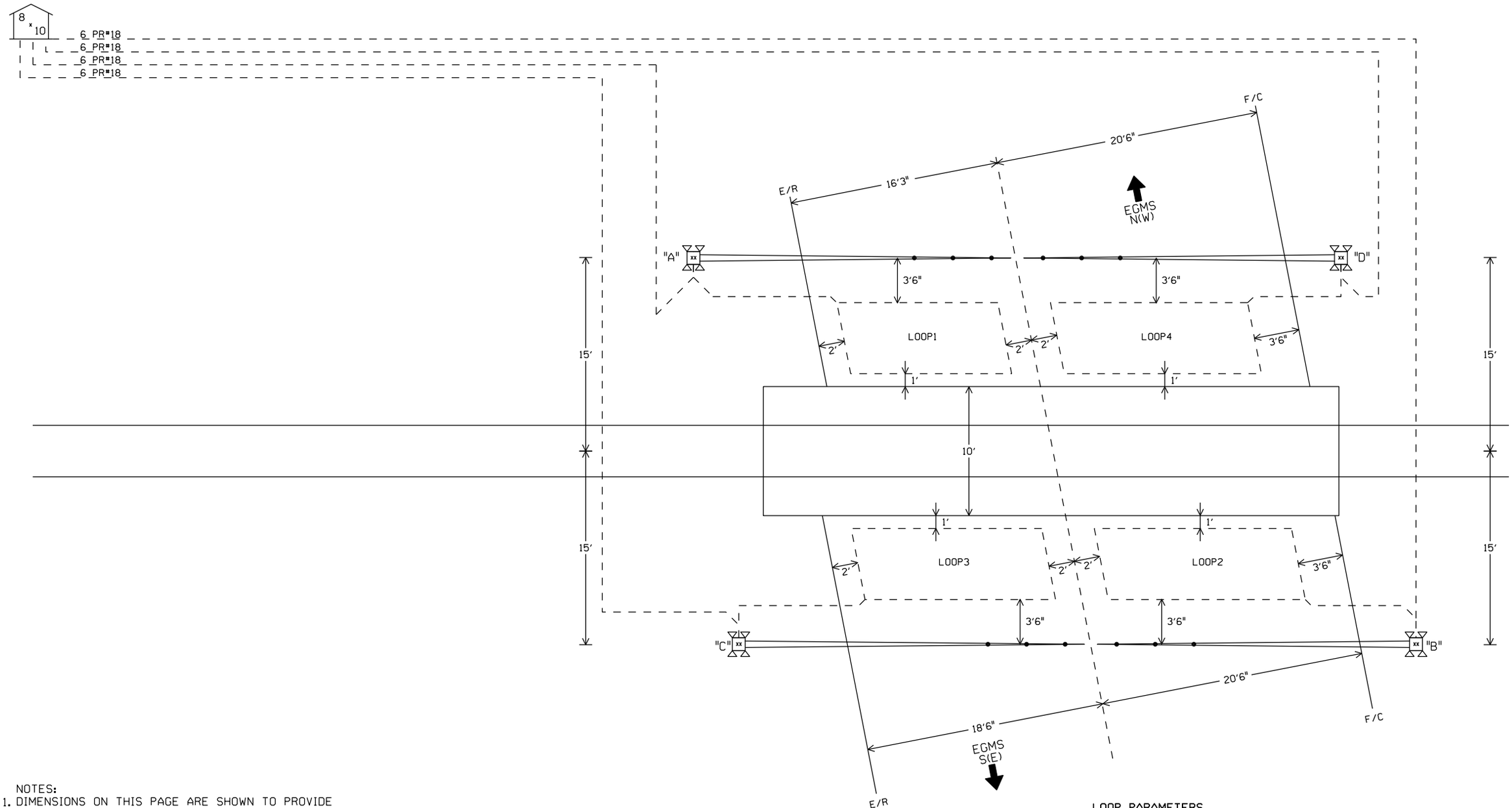

NOTES:

1. DIMENSIONS ON THIS PAGE ARE SHOWN TO PROVIDE GUIDANCE FOR CONSTRUCTION CREWS AND FUTURE MAINTENANCE REPAIRS.
2. REFER TO SAFETRAN EGMS STANDARDS AND RECOMENDED PRACTICES FOR LOOP LAYOUT DESIGN DETAILS.
3. SAFETRAN EGMS JUNCTION BOX INSTALLED ON TOP OF EACH FOUNDATION.
4. INSTALL SAFETRAN 6 PAIR #18 CABLE FROM JUNCTION BOX TO BUNGALOW.
5. COMBINATION CURB & GUTTER TYPE B-6.18 IN NW & NE QUADRANTS.
6. F/C = FACE OF CURB
7. E/R = EDGE OF ROAD

LOOP PARAMETERS

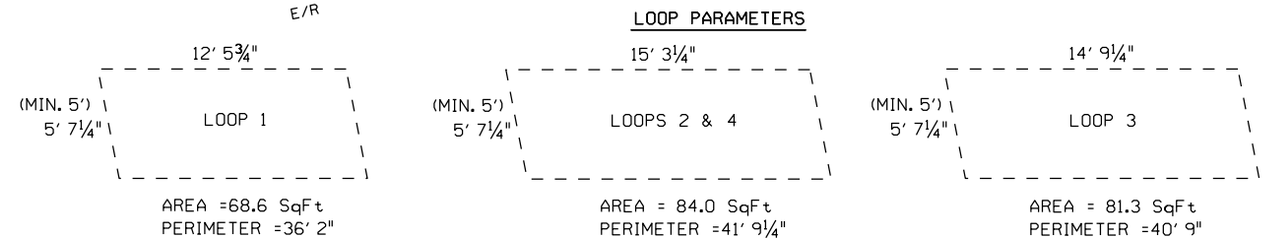

AREA =68.6 SqFt
PERIMETER =36' 2"

AREA = 84.0 SqFt
PERIMETER =41' 9¼"

AREA = 81.3 SqFt
PERIMETER =40' 9"

LOOP SIZES

LOOP #	LOOP PERIMETER	LOOP LEAD-IN	PART #
1	37'	25'	PLC-37-25
2	42'	25'	PLC-42-25
3	41'	25'	PLC-41-25
4	42'	25'	PLC-42-25

℄ +

LOOP PLACEMENT SKETCH

NOT TO SCALE

NEW SHEET

Designed: 09/25/14
TIER 3 PHASE 1
M.P.202.30 TO
M.P.194.80
HSR SCOPE CHANGE
Rec#: WO#: 14052
IS: / / NST/MJF

MODIFICATION LEVEL	
O. A. LAST LEVEL CHECKED	DU
LAST LEVEL MOD THIS TYPICAL	DU
LAST LEVEL BY DESIGNER	DU
CHANGED FROM TYPICAL?	Y

REV 01.24.11 4K 2TKEGMS.8B

CIRCUIT MODIFICATIONS ARE NOT TO BE MADE WITHOUT AUTHORITY FROM THE OFFICE OF SIGNAL DESIGN

Date: 09/25/14
Des: NST
Chk:
AFE: 14052

UNION PACIFIC RAILROAD
AUBURN, ILLINOIS
MADISON STREET
SPRINGFIELD SUBDIVISION
Office of AVP Engineering - Signal Omaha, Nebraska

Sh.: 11A
DOT 294346N
MP: 200.63
ID: CSL20063.11AX

(1) E-1400 SETUP PARAMETERS

FUNCTION	CH. 1	CH. 2	CH. 3	CH. 4
FREQUENCY SETTING	2	4	6	8
SENSITIVIY SETTING	6•	6•	6•	6•
OPTION 1 (TEMP L DISPLAY)	OFF			
OPTION 2 (TEMP ΔL/L DISPLAY)	OFF			
OPTION 3 (NOISE FILTER)	3.00	3.00	3.00	3.00
OPTION 4 (TRACKING)	4.02	4.02	4.02	4.02
OPTION 5 (SENSITIVITY BOOST)	5.00	5.00	5.00	5.00
OPTION 6 (TEMP AUDIBLE SIGNAL)	OFF	OFF	OFF	OFF
CHECKLOOP INTERVAL	005	005	005	005
DETECTOR ID	000			
OPTION 7 (DETECTOR SYNC)	7.01			
OPTION 8 (ISL OPTION)	OFF			
OPTION 9 (SHUNT ENHANCEMENT SE)	OFF	OFF	OFF	OFF
MAIN VITAL OUTPUT DELAY	00.0	00.0	00.0	00.0
MAIN VITAL OUTPUT EXTENSION	00.0	00.0	00.0	00.0
MAIN VITAL OUTPUT MAPPING	10	20	40	80
AUX VITAL OUTPUT MAPPING	001	002	004	008
LOOP FREQUENCY (Khz)				
LOOP INDUCTANCE (MICRO HENRIES)				

SOFTWARE VERSION 4.02
• FIELD VERIFY

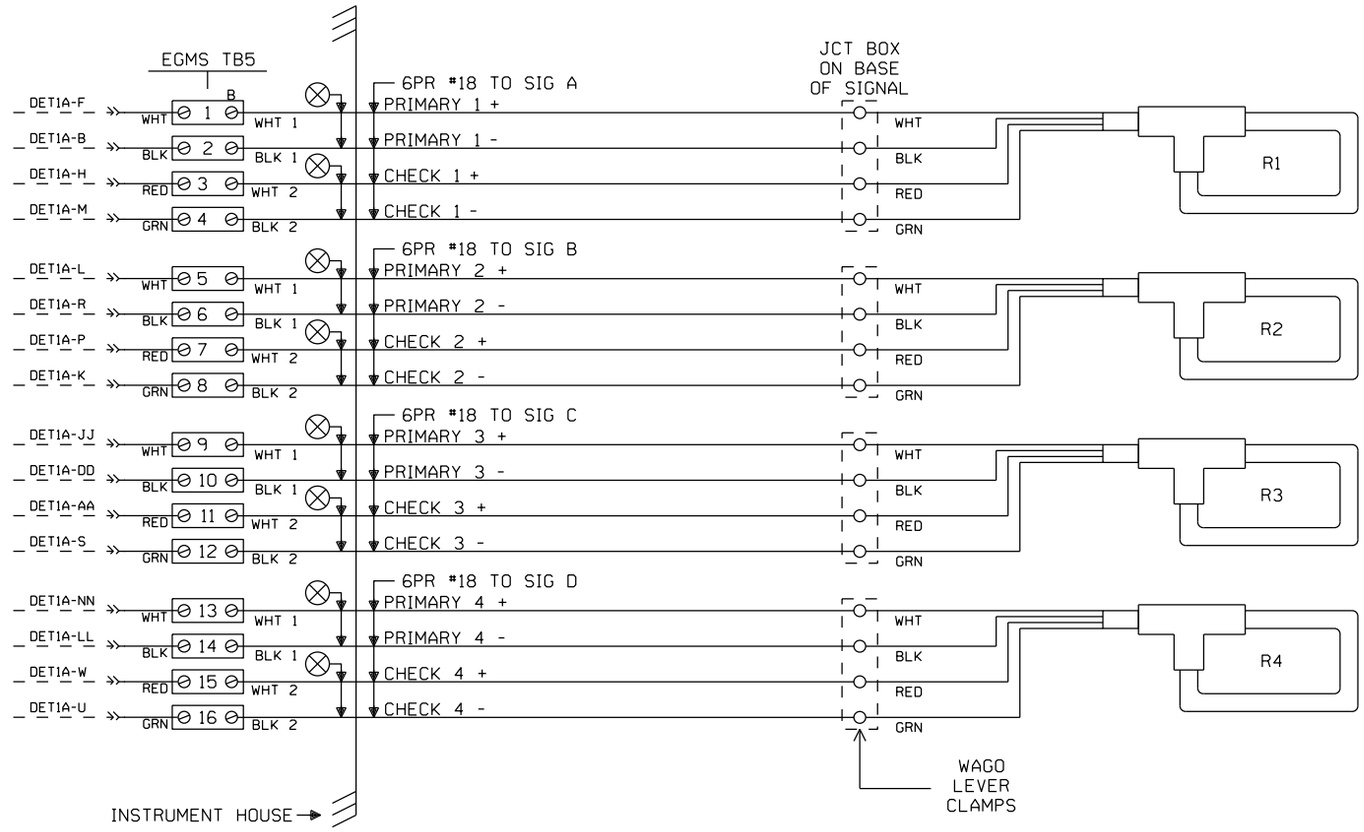

CABLE TABULATION

CABLE NO. (17) 6/PR #18 U.G.C. TO JCT BOX ON BASE OF GATE "A" (RCL PART #03-094-005)
CABLE NO. (18) 6/PR #18 U.G.C. TO JCT BOX ON BASE OF GATE "B" (RCL PART #03-094-005)
CABLE NO. (19) 6/PR #18 U.G.C. TO JCT BOX ON BASE OF GATE "C" (RCL PART #03-094-005)
CABLE NO. (20) 6/PR #18 U.G.C. TO JCT BOX ON BASE OF GATE "D" (RCL PART #03-094-005)

NEW SHEET

Designed: 3/09/12
TIER 3 PHASE 1
M.P.202.30 TO
M.P.194.80
UPGRADE XINGS TO
4 QUAD WITH EGMS,
VARIOUS CP'S
Rec#: WO#: 14052
IS: MWK/
/ /NST/MJF

MODIFICATION LEVEL	
O. A. LAST LEVEL CHECKED	DU
LAST LEVEL MOD THIS TYPICAL	DU
LAST LEVEL BY DESIGNER	DU
CHANGED FROM TYPICAL?	Y

REV 01.24.11 4K 2TKEGMS.9

CIRCUIT MODIFICATIONS ARE NOT TO BE MADE WITHOUT AUTHORITY FROM THE OFFICE OF SIGNAL DESIGN

Date: 03/09/12
Des: NST
Chk: MWK
AFE: 14052

UNION PACIFIC RAILROAD
AUBURN, ILLINOIS
MADISON STREET
SPRINGFIELD SUBDIVISION
Office of AVP Engineering - Signal Omaha, Nebraska

Sh.: 12
DOT 294346N
MP: 200.63
ID: CSL20063.12X

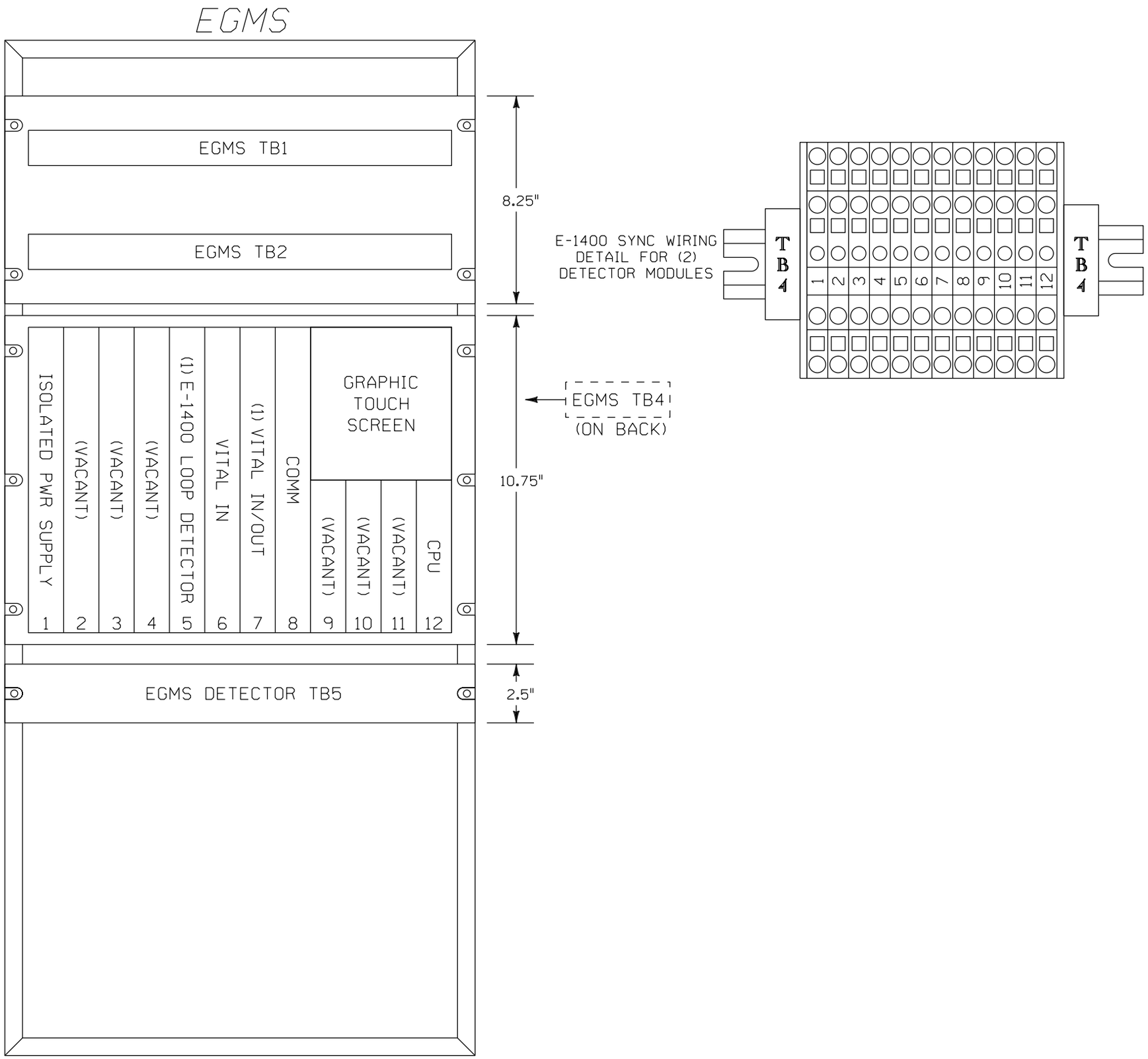

NEW SHEET

Designed: 3/09/12 TIER 3 PHASE 1 M.P.202.30 TO M.P.194.80 UPGRADE XINGS TO 4 QUAD WITH EGMS, VARIOUS CP'S	MODIFICATION LEVEL		CIRCUIT MODIFICATIONS ARE NOT TO BE MADE WITHOUT AUTHORITY FROM THE OFFICE OF SIGNAL DESIGN	Date: 03/09/12	UNION PACIFIC RAILROAD
Rec#: WO#: 14052	Q.A. LAST LEVEL CHECKED	DU		Des: NST	AUBURN, ILLINOIS MADISON STREET SPRINGFIELD SUBDIVISION
IS: MWK/ / /NST/MJF	LAST LEVEL MOD THIS TYPICAL	DU		Chk: MWK	
	LAST LEVEL BY DESIGNER	DU		AFE: 14052	Office of AVP Engineering - Signal Omaha, Nebraska
	CHANGED FROM TYPICAL? REV 01.24.11 4K 2TKEGMS.9B	Y			

Sh.:	12A
DOT	294346N
MP:	200.63
ID:	CSL20063.12AX

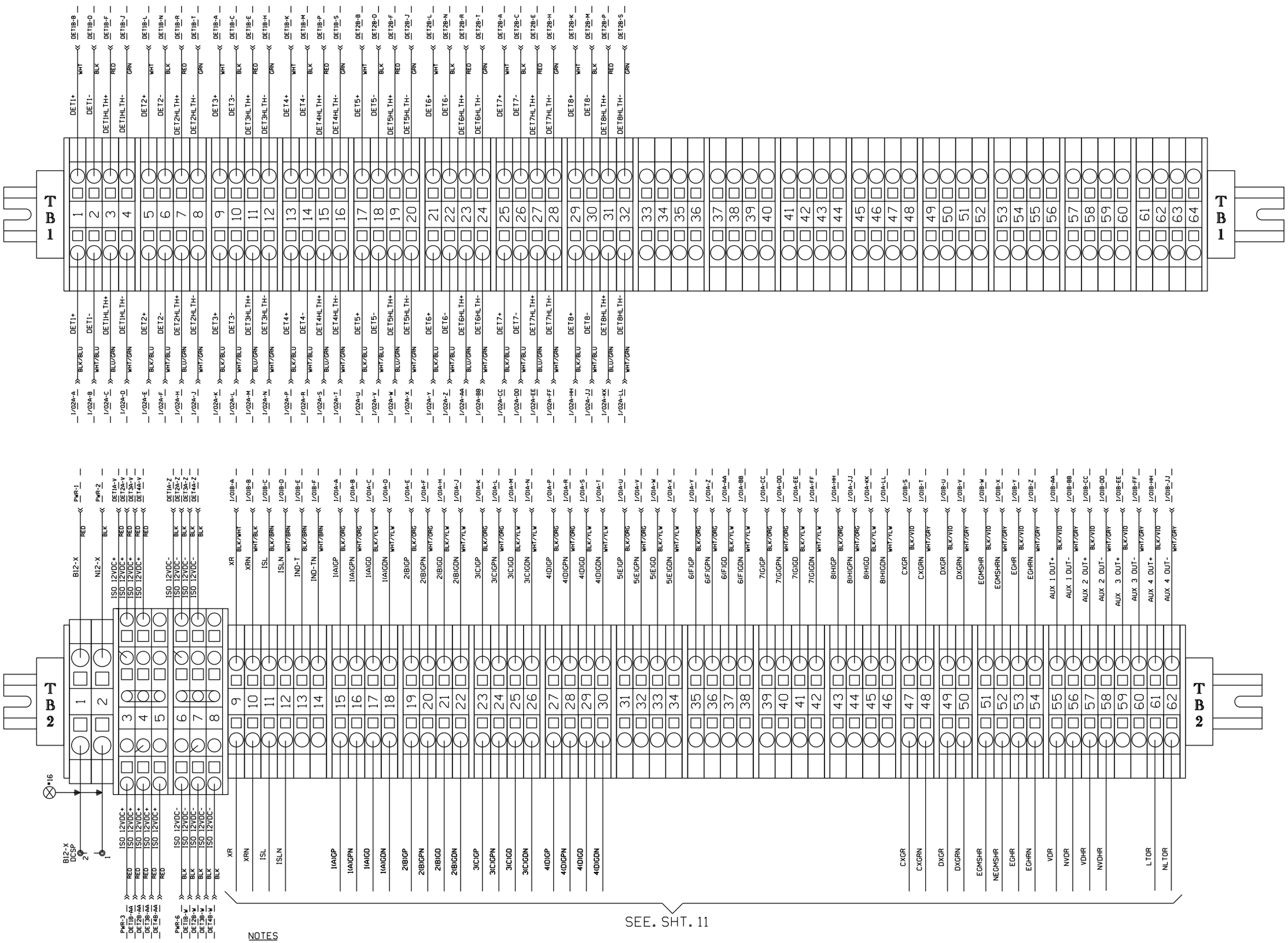

NOTES

1. TB1 PROVIDES AN EXTERNAL PASS THROUGH BETWEEN THE E-1400 MODULES AND THE VITAL INPUT MODULE IN CHASSIS POSITION 6. EGMS OR EGMS+ UNITS CONFIGURED FOR LESS THAN 4 EACH E-1400 MODULES WILL ONLY BE WIRED AS REQUIRED.
2. TB2-3 THROUGH TB2-8 PROVIDE A CONNECTION BUS FOR INTERNAL SUPPLY VOLTAGES AND MUST NOT BE USED TO SUPPLY OTHER CIRCUITS.

NEW SHEET

Designed: 3/09/12 TIER 3 PHASE 1 M.P.202.30 TO M.P.194.80 UPGRADE XINGS TO 4 QUAD WITH EGMS, VARIOUS CP'S Rec#: WO#: 14052 IS: MWK/ / /NST/MJF	MODIFICATION LEVEL		CIRCUIT MODIFICATIONS ARE NOT TO BE MADE WITHOUT AUTHORITY FROM THE OFFICE OF SIGNAL DESIGN	Date: 03/09/12 Des: NST Chk: MWK AFE: 14052	UNION PACIFIC RAILROAD AUBURN, ILLINOIS MADISON STREET SPRINGFIELD SUBDIVISION Office of AVP Engineering - Signal Omaha, Nebraska	Sh.: 12B DOT 294346N MP: 200.63 ID: CSL20063.12BX
	Q.A. LAST LEVEL CHECKED	DU				
	LAST LEVEL MOD THIS TYPICAL	DU				
	LAST LEVEL BY DESIGNER	DU				
	CHANGED FROM TYPICAL? REV 01.24.11 4K 2TKEGMS.9C	Y				

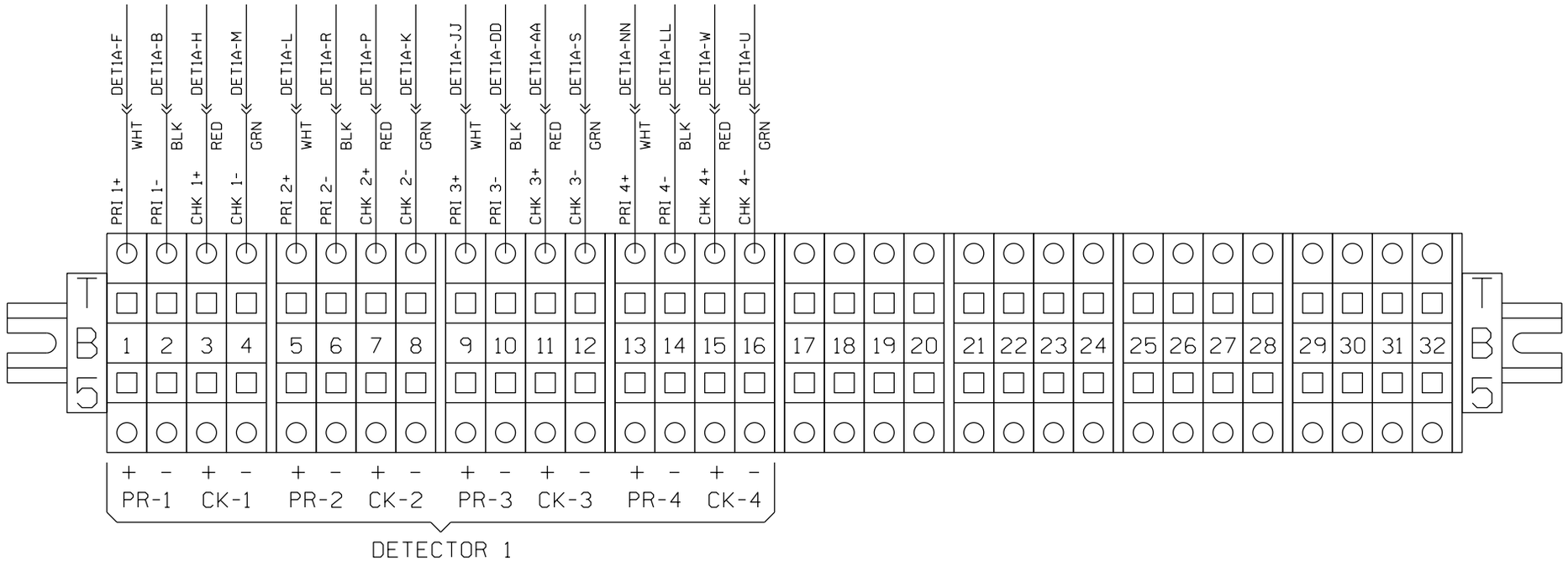

NEW SHEET

					Designed: 3/09/12 TIER 3 PHASE 1 M.P.202.30 TO M.P.194.80 UPGRADE XINGS TO 4 QUAD WITH EGMS, VARIOUS CP'S Rec#: WO#: 14052 IS: MWK/ / /NST/MJF	MODIFICATION LEVEL		CIRCUIT MODIFICATIONS ARE NOT TO BE MADE WITHOUT AUTHORITY FROM THE OFFICE OF SIGNAL DESIGN	Date: 03/09/12 Des: NST Chk: MWK AFE: 14052	UNION PACIFIC RAILROAD AUBURN, ILLINOIS MADISON STREET SPRINGFIELD SUBDIVISION Office of AVP Engineering - Signal Omaha, Nebraska	Sh.: 12C DOT 294346N MP: 200.63 ID: CSL20063.12CX
						Q.A. LAST LEVEL CHECKED	DU								
						LAST LEVEL MOD THIS TYPICAL	DU								
						LAST LEVEL BY DESIGNER	DU								
						CHANGED FROM TYPICAL? REV 01.24.11 4K 2TKEGMS.9D	Y								

NOTE

* = TEMPORARY JUMPERS TO BE REMOVED AND HSR SWITCH PUT INTO THE NORMAL POSITION WHEN THE HIGH SPEED EQUIPMENT IS INSTALLED.

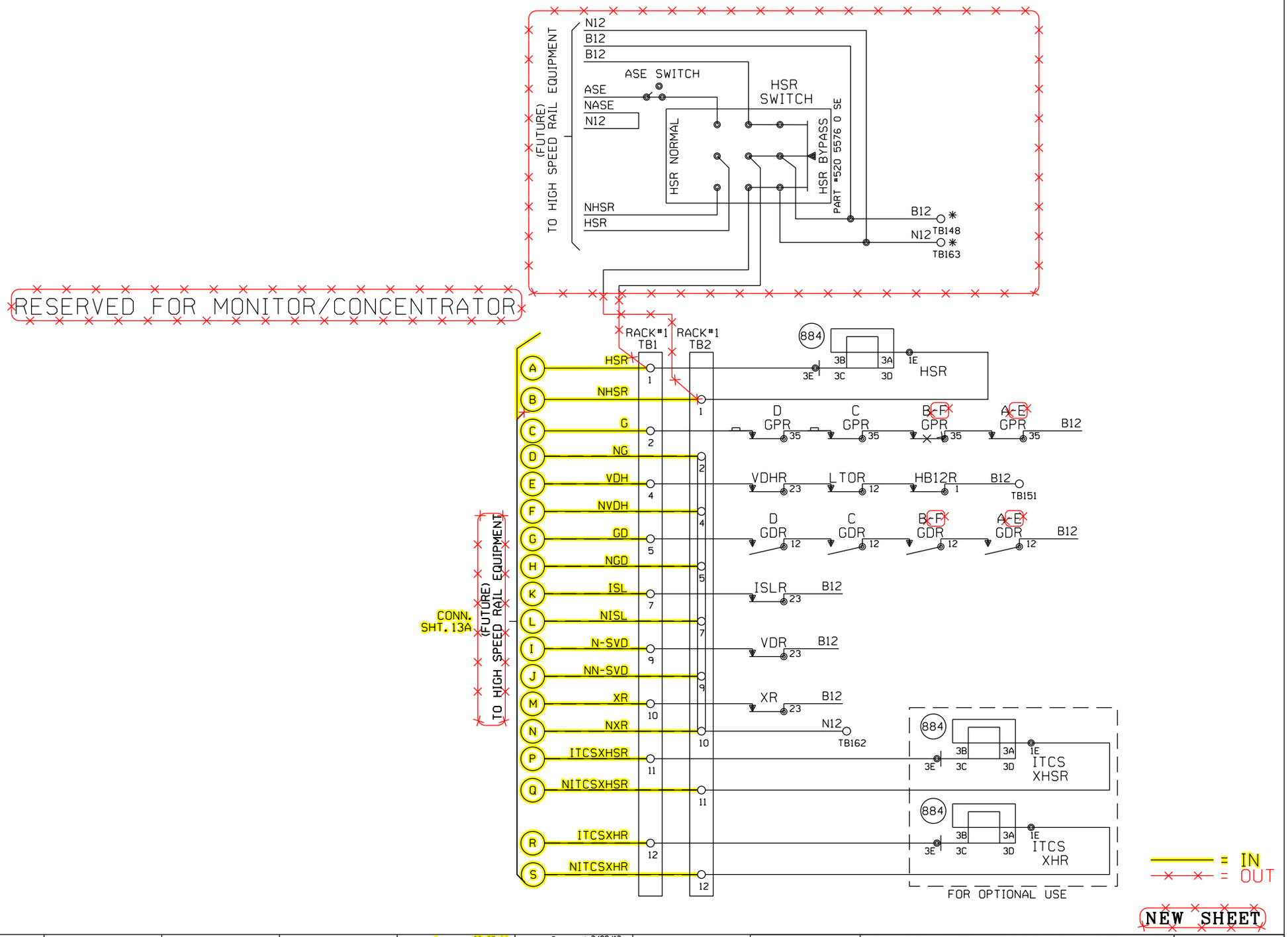

NEW SHEET

Designed: 09/25/14 TIER 3 PHASE 1 M.P.202.30 TO M.P.194.80 HSR SCOPE CHANGE Rec#: WO#: 14052 IS: / /NST/MJF	Designed: 3/09/12 TIER 3 PHASE 1 M.P.202.30 TO M.P.194.80 UPGRADE XINGS TO 4 QUAD WITH EGMS. VARIOUS CP'S Rec#: WO#: 14052 IS: MWK/ / /NST/MJF	CIRCUIT MODIFICATIONS ARE NOT TO BE MADE WITHOUT AUTHORITY FROM THE OFFICE OF SIGNAL DESIGN	Date: 03/09/12 Des: NST Chk: MWK AFE: 14052	UNION PACIFIC RAILROAD AUBURN, ILLINOIS MADISON STREET SPRINGFIELD SUBDIVISION Office of AVP Engineering - Signal Omaha, Nebraska	Sh.: 13 DOT 294346N MP: 200.63 ID: CSL20063.13X

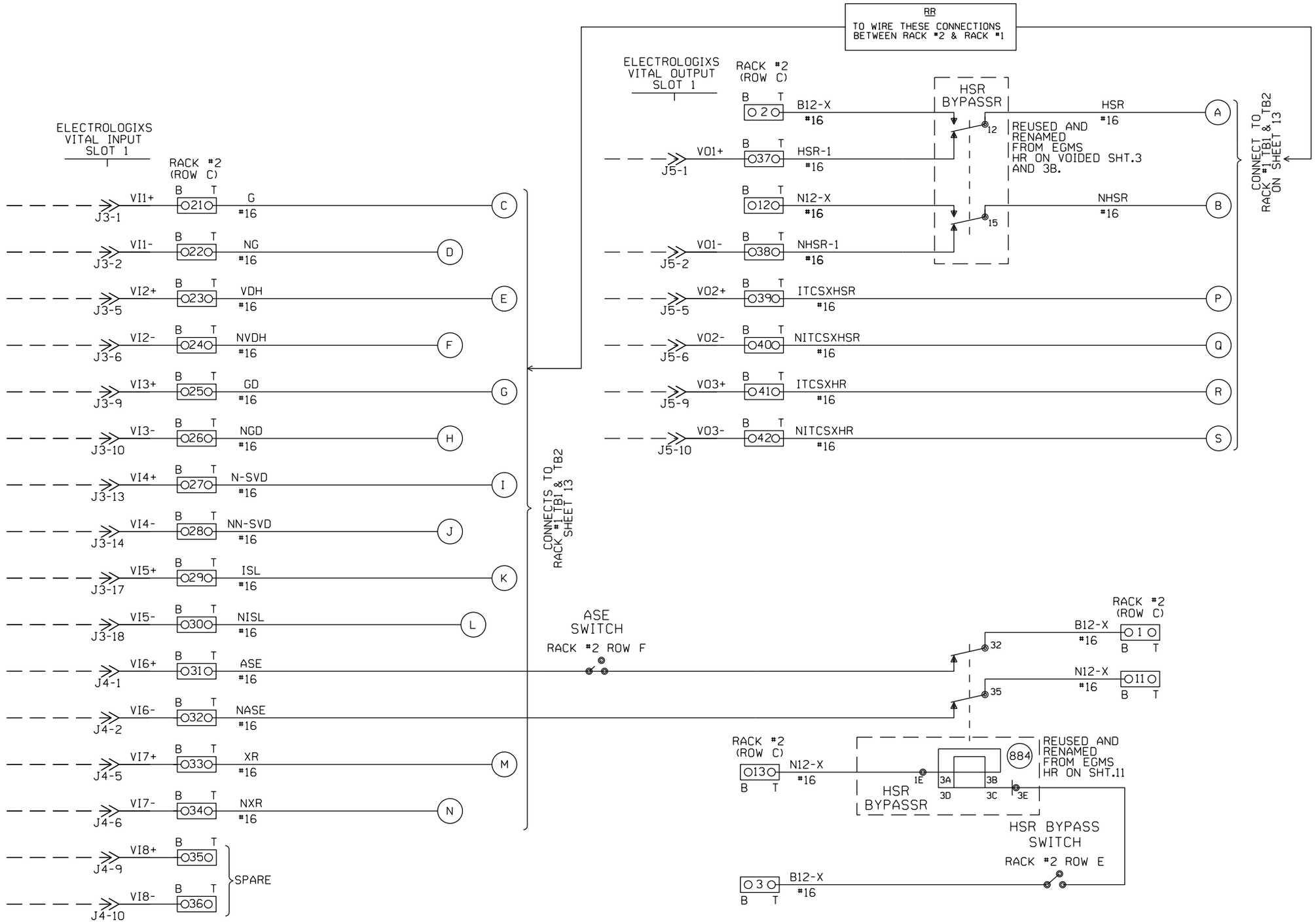

NOTES:

1. INPUT WIRES, OUTPUT WIRES, POWER WIRES, PUT IN SEPARATE BUNDLES.
2. ALL WIRES #16 UNLESS NOTED.
3. O?? O 2 POSITION WAGO BLOCK.

NEW SHEET

							Designed: 09/25/14 TIER 3 PHASE 1 M.P.202.30 TO M.P.194.80 HSR SCOPE CHANGE Rec#: WO#: 14052 IS: NST/MJF	CIRCUIT MODIFICATIONS ARE NOT TO BE MADE WITHOUT AUTHORITY FROM THE OFFICE OF SIGNAL DESIGN	Date: 09/25/14 Des: NST Chk: AFE: 14052	UNION PACIFIC RAILROAD AUBURN, ILLINOIS MADISON STREET SPRINGFIELD SUBDIVISION Office of AVP Engineering - Signal Omaha, Nebraska	Sh.: 13A DOT 294346N MP: 200.63 ID: CSL20063.13AX

WIRING NOTE:
WIRE 30' LONG WIRES TO BSA-4

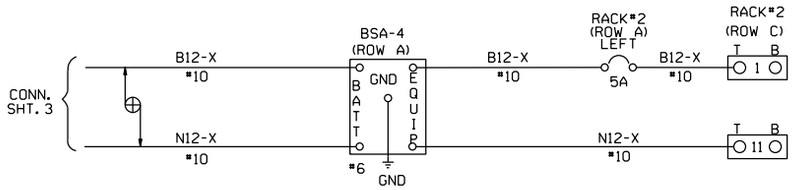

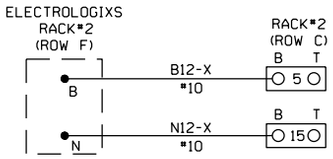

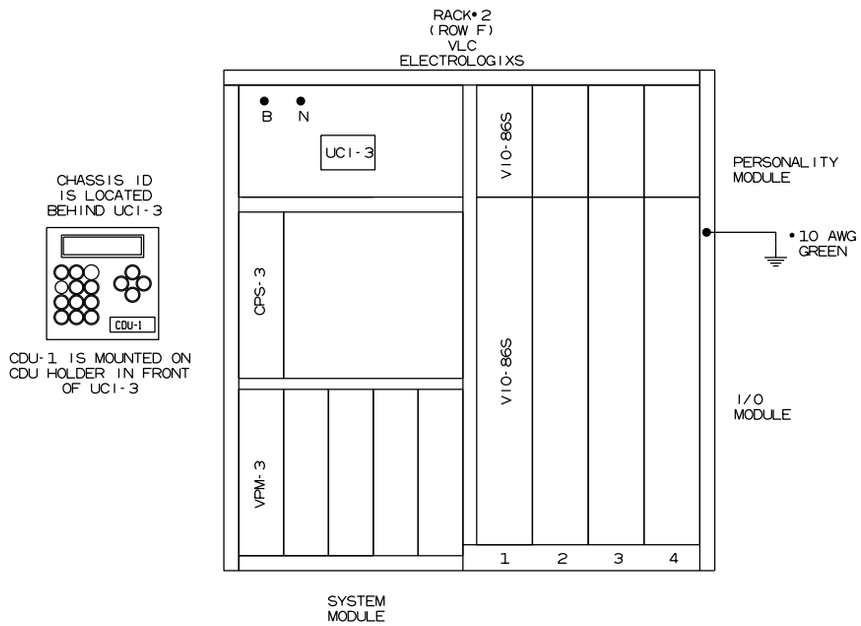

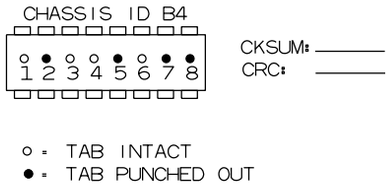

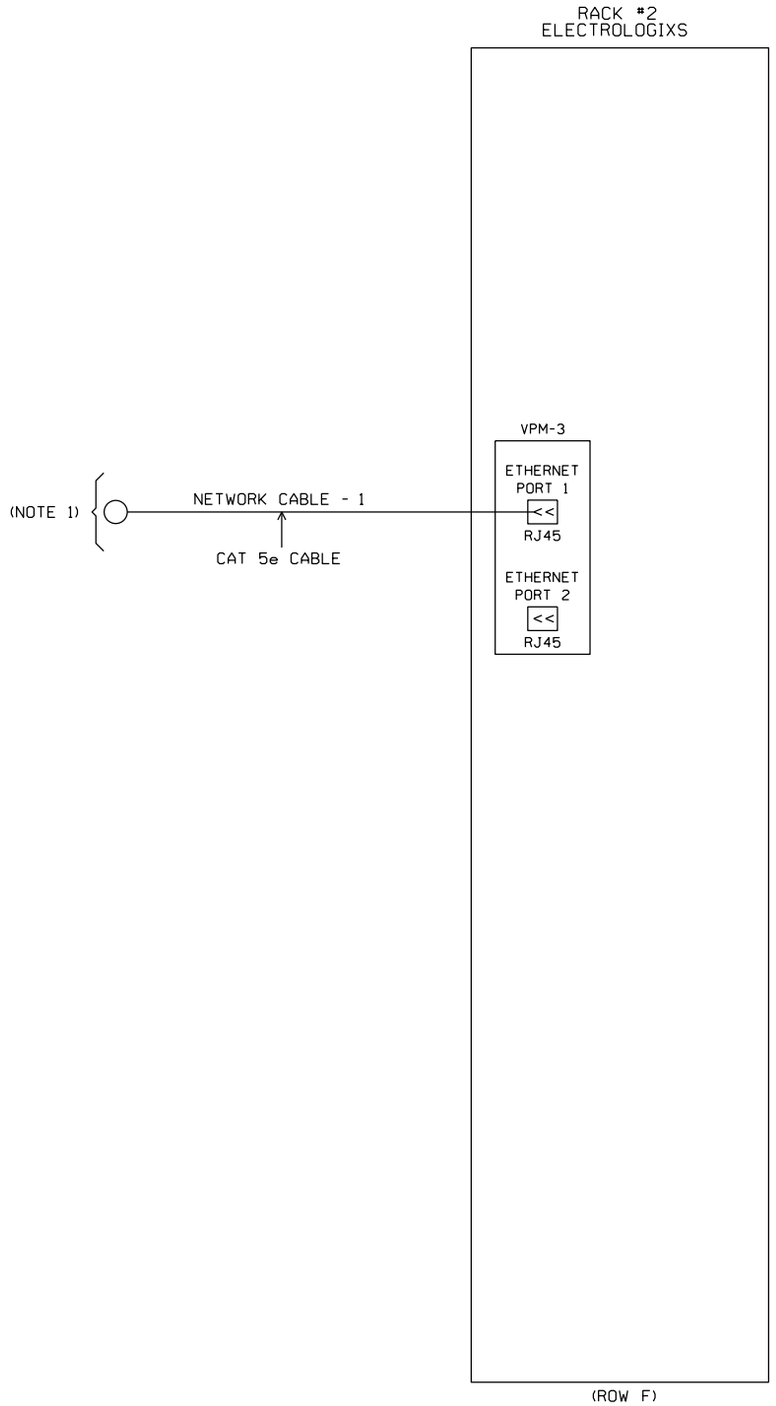

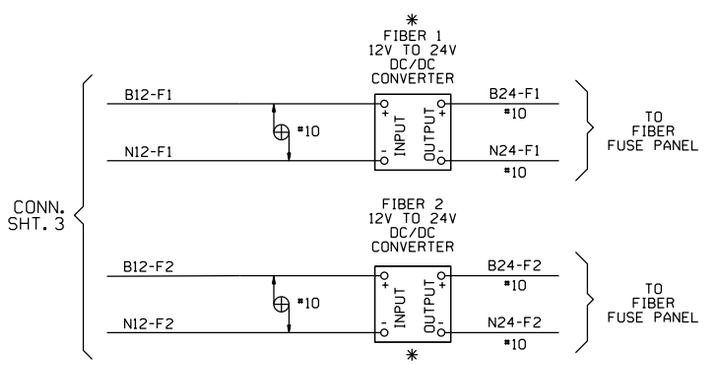

NOTES:

1. NETWORK SWITCH INSTALLED BY RR.

DENOTES TWISTED PAIR

O?? O 2 POSITION WAGO BLOCK

* - TO BE FIELD MOUNTED AFTER IT IS DETERMINED WHERE TO MOUNT.

NEW SHEET

							Designed: 09/25/14 TIER 3 PHASE 1 M.P.202.30 TO M.P.194.80 HSR SCOPE CHANGE Rec#: IS: WO#: 14052 / NST/MJF	CIRCUIT MODIFICATIONS ARE NOT TO BE MADE WITHOUT AUTHORITY FROM THE OFFICE OF SIGNAL DESIGN	Date: 09/25/14 Des: NST Chk: AFE: 14052	UNION PACIFIC RAILROAD AUBURN, ILLINOIS MADISON STREET SPRINGFIELD SUBDIVISION Office of AVP Engineering - Signal Omaha, Nebraska	Sh.: 13B DOT 294346N MP: 200.63 ID: CSL20063.13BX

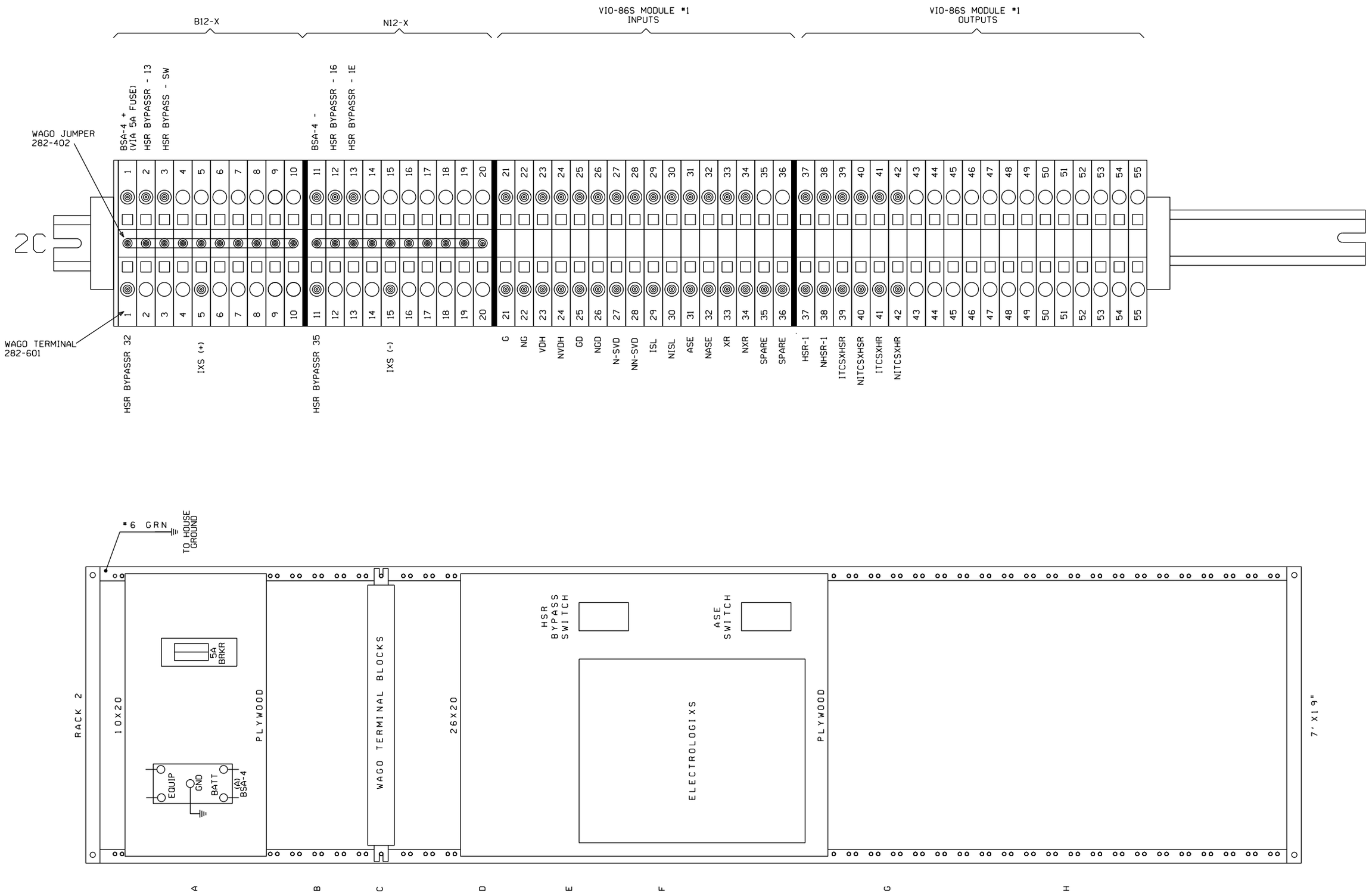

NEW SHEET

							Designed: 09/25/14 TIER 3 PHASE 1 M.P.202.30 TO M.P.194.80 HSR SCOPE CHANGE Rec#: WO#: 14052 IS: / /NST/MJF	CIRCUIT MODIFICATIONS ARE NOT TO BE MADE WITHOUT AUTHORITY FROM THE OFFICE OF SIGNAL DESIGN	Date: 09/25/14 Des: NST Chk: AFE: 14052	UNION PACIFIC RAILROAD AUBURN, ILLINOIS MADISON STREET SPRINGFIELD SUBDIVISION Office of AVP Engineering - Signal Omaha, Nebraska	Sh.: 13C DOT 294346N MP: 200.63 ID: CSL20063.13CX

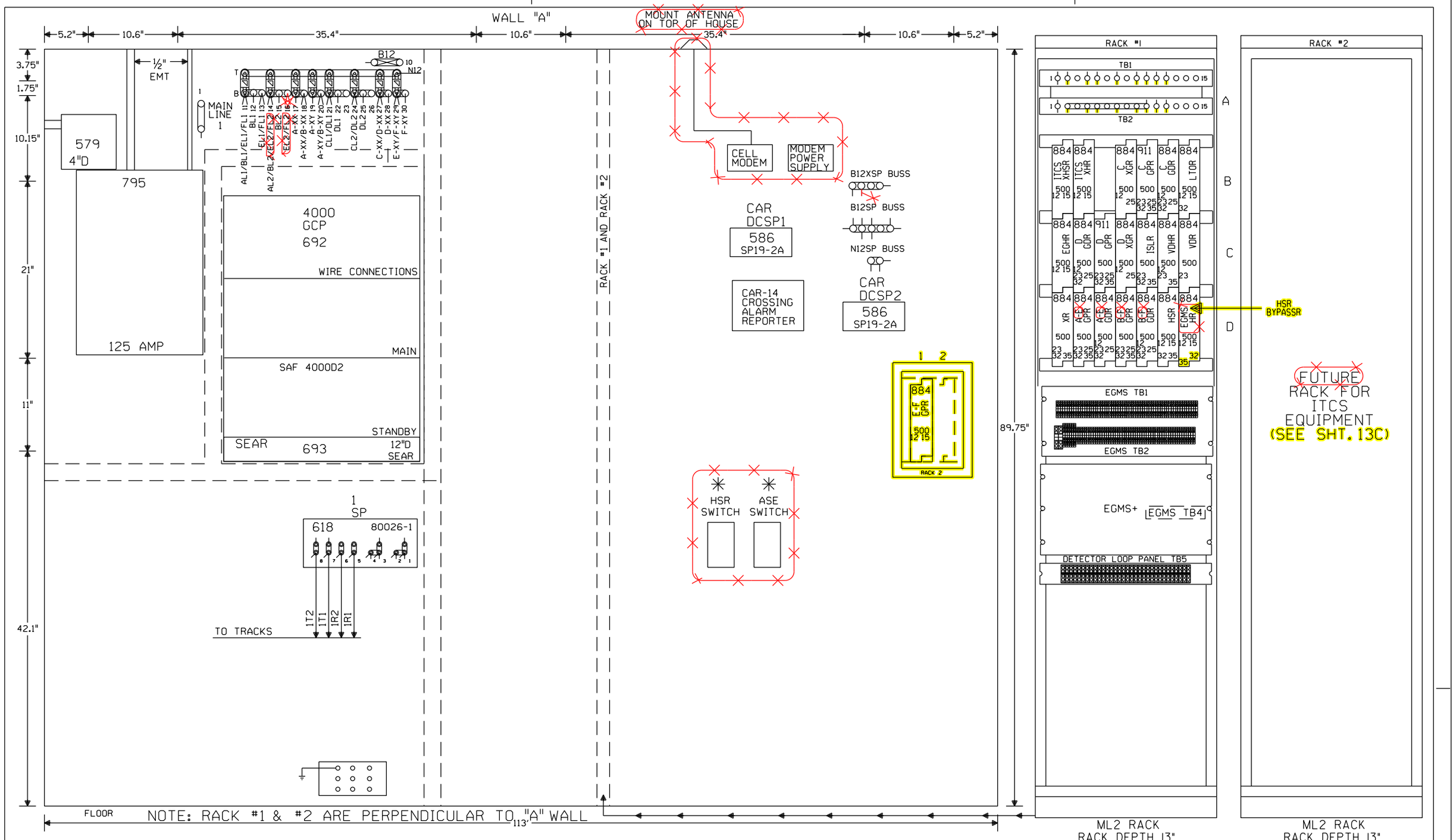

✳ - FIELD TO DETERMINE THE LOCATION OF SWITCHES

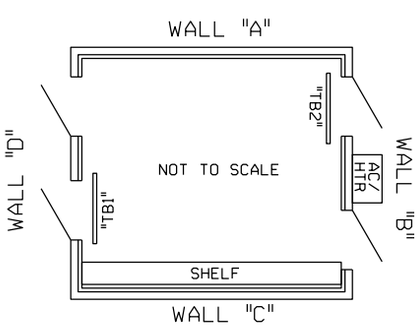

NOTE: ALL DIMENSIONS SHOWN ARE APPROXIMATE.

= IN
= OUT

NEW SHEET

						Designed: 09/25/14 TIER 3 PHASE 1 M.P.202.30 TO M.P.194.80 HSR SCOPE CHANGE Rec#: WO#: 14052 IS: / /NST/MJF	Designed: 3/09/12 TIER 3 PHASE 1 M.P.202.30 TO M.P.194.80 UPGRADE XINGS TO 4 QUAD WITH EGMS, VARIOUS CP'S Rec#: WO#: 14052 IS: / /NST/MJF	CIRCUIT MODIFICATIONS ARE NOT TO BE MADE WITHOUT AUTHORITY FROM THE OFFICE OF SIGNAL DESIGN	Date: 03/09/12 Des: NST Chk: MWK AFE: 14052	UNION PACIFIC RAILROAD AUBURN, ILLINOIS MADISON STREET SPRINGFIELD SUBDIVISION Office of AVP Engineering - Signal Omaha, Nebraska	Sh.: 14 DOT 294346N MP: 200.63 ID: CSL20063.14X

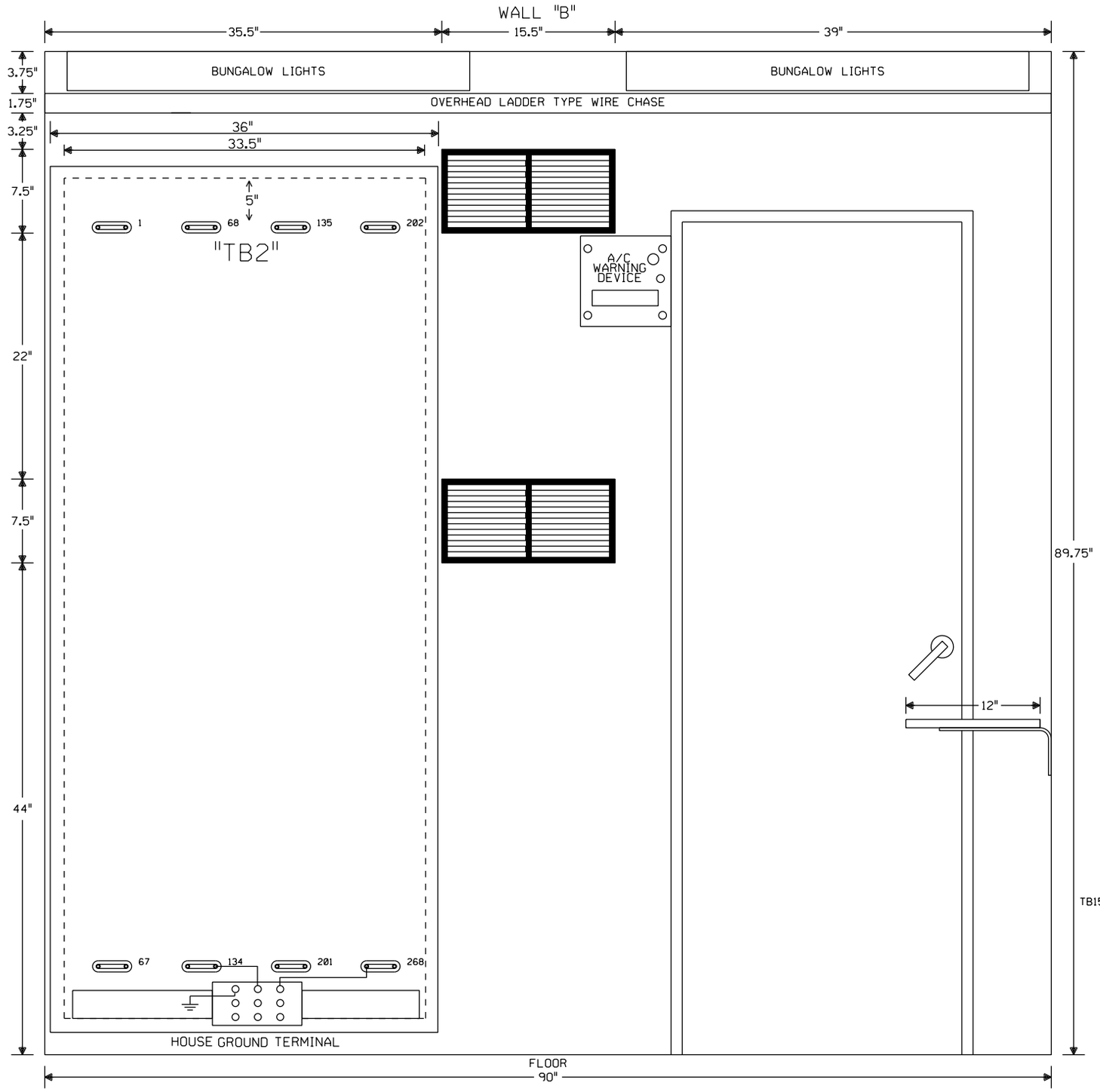

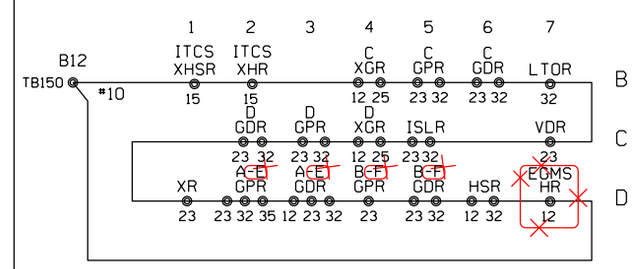

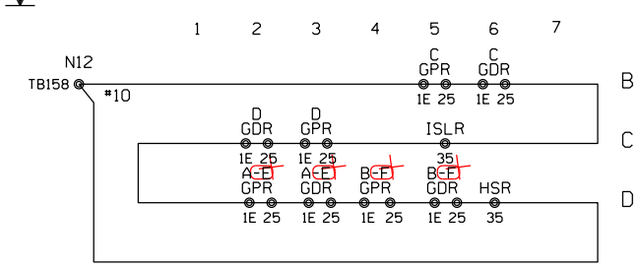

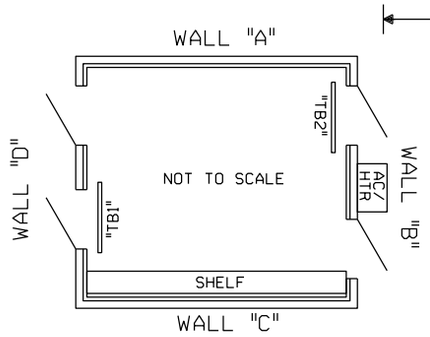

NOTE: ALL DIMENSIONS SHOWN ARE APPROXIMATE.

= IN
= OUT

NEW SHEET

						Designed: 09/25/14 TIER 3 PHASE 1 M.P.202.30 TO M.P.194.80 HSR SCOPE CHANGE Rec#: WO#: 14052 IS: / /NST/MJF	Designed: 3/09/12 TIER 3 PHASE 1 M.P.202.30 TO M.P.194.80 UPGRADE XINGS TO 4 QUAD WITH EGMS, VARIOUS CP'S Rec#: WO#: 14052 IS: MWK/ /NST/MJF	CIRCUIT MODIFICATIONS ARE NOT TO BE MADE WITHOUT AUTHORITY FROM THE OFFICE OF SIGNAL DESIGN	Date: 03/09/12 Des: NST Chk: MWK AFE: 14052	UNION PACIFIC RAILROAD AUBURN, ILLINOIS MADISON STREET SPRINGFIELD SUBDIVISION Office of AVP Engineering - Signal Omaha, Nebraska	Sh.: 15 DOT 294346N MP: 200.63 ID: CSL20063.15X

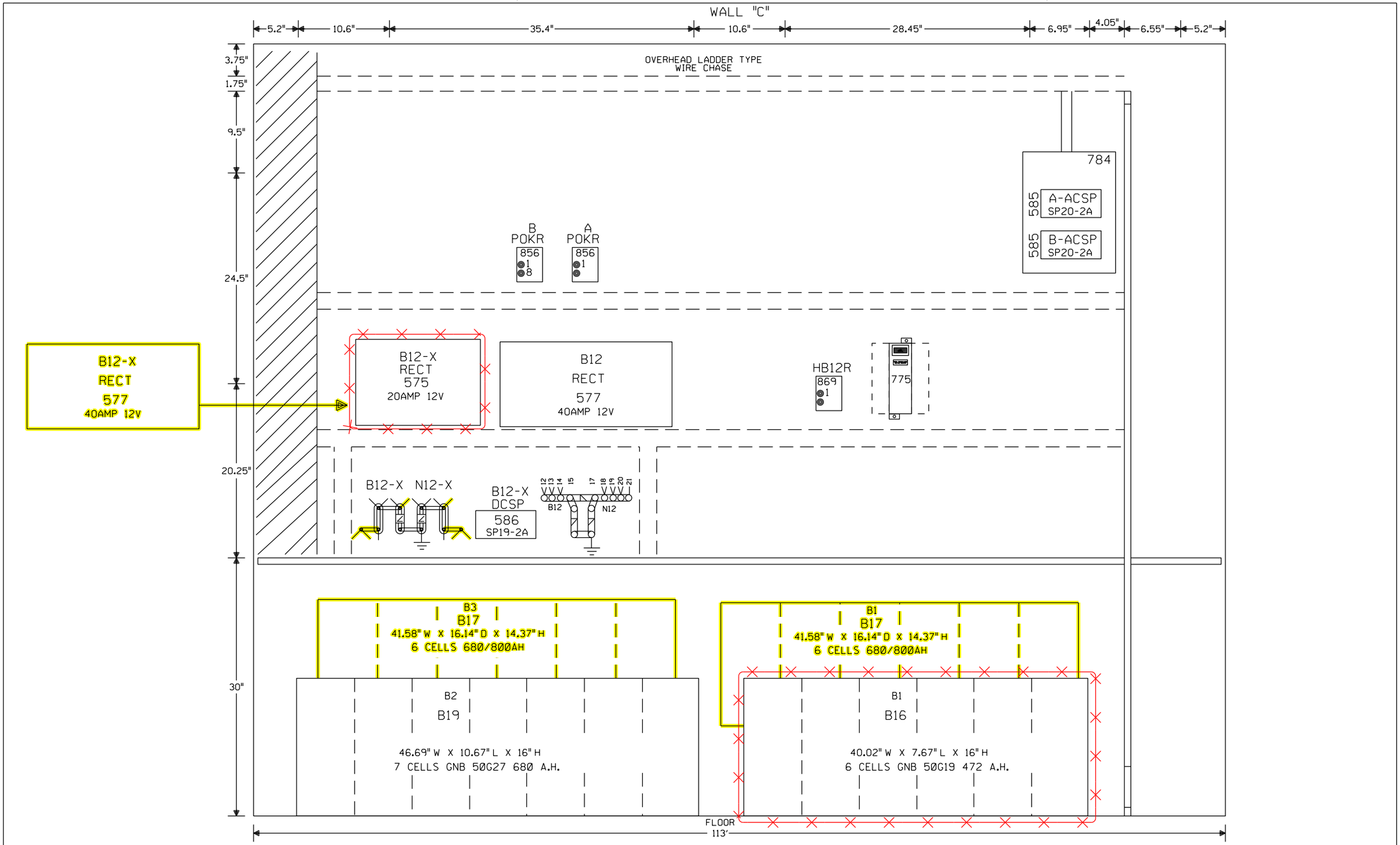

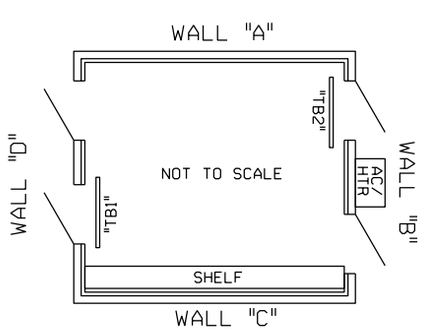

NOTE: ALL DIMENSIONS SHOWN ARE APPROXIMATE.

= IN
= OUT

NEW SHEET

Designed: 09/25/14 TIER 3 PHASE 1 M.P.202.30 TO M.P.194.80 HSR SCOPE CHANGE Rec*: WO*: 14052 IS: / / NST/MJF	Designed: 3/09/12 TIER 3 PHASE 1 M.P.202.30 TO M.P.194.80 UPGRADE XINGS TO 4 QUAD WITH EGMS, VARIOUS CP'S Rec*: WO*: 14052 IS: / MWK/ /NST/MJF	CIRCUIT MODIFICATIONS ARE NOT TO BE MADE WITHOUT AUTHORITY FROM THE OFFICE OF SIGNAL DESIGN	Date: 03/09/12 Des: NST Chk: MWK AFE: 14052	UNION PACIFIC RAILROAD AUBURN, ILLINOIS MADISON STREET SPRINGFIELD SUBDIVISION Office of AVP Engineering - Signal Omaha, Nebraska	Sh.: 16 DOT 294346N MP: 200.63 ID: CSL20063.16X

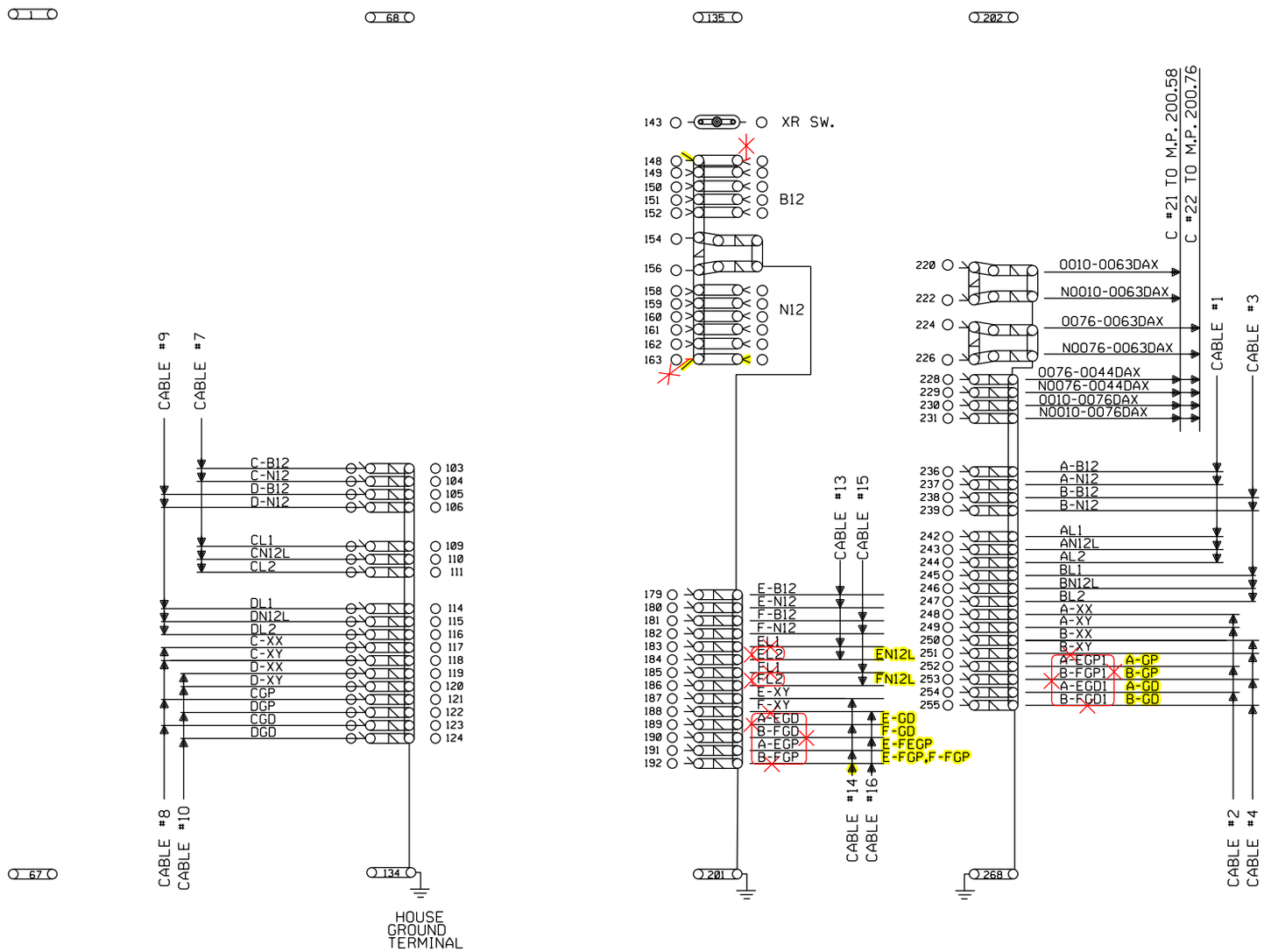

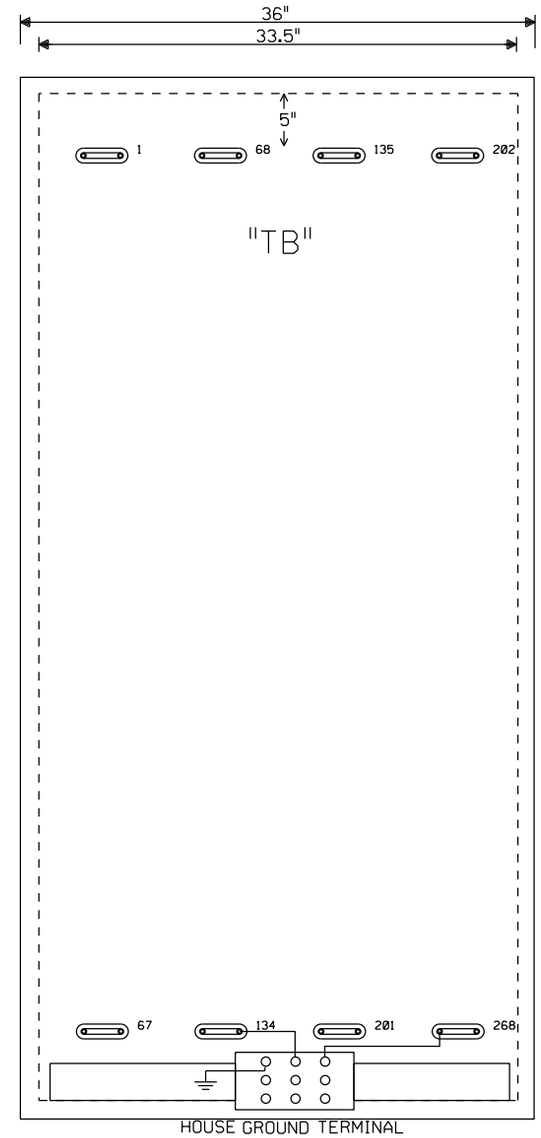

NOTE: NO TEST LINKS TO BE INSTALLED WITH CROSSING LIGHTING OR GATE MECH CIRCUITRY

NOTE: ALL DIMENSIONS SHOWN ARE APPROXIMATE.

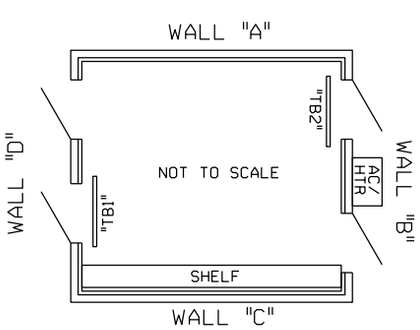

SEE SIGNAL STANDARD DRAWING 846120UP FOR HOUSE GROUNDING SCHEME

= IN
= OUT

NEW SHEET

						Designed: 09/25/14 TIER 3 PHASE 1 M.P.202.30 TO M.P.194.80 HSR SCOPE CHANGE Rec#: WO#: 14052 IS: / /NST/MJF	Designed: 3/09/12 TIER 3 PHASE 1 M.P.202.30 TO M.P.194.80 UPGRADE XINGS TO 4 QUAD WITH EGMS, VARIOUS CP'S Rec#: WO#: 14052 IS: MWK/ / /NST/MJF	CIRCUIT MODIFICATIONS ARE NOT TO BE MADE WITHOUT AUTHORITY FROM THE OFFICE OF SIGNAL DESIGN	Date: 03/09/12 Des: NST Chk: MWK AFE: 14052	UNION PACIFIC RAILROAD AUBURN, ILLINOIS MADISON STREET SPRINGFIELD SUBDIVISION Office of AVP Engineering - Signal Omaha, Nebraska	Sh.: 17 DOT 294346N MP: 200.63 ID: CSL20063.17X

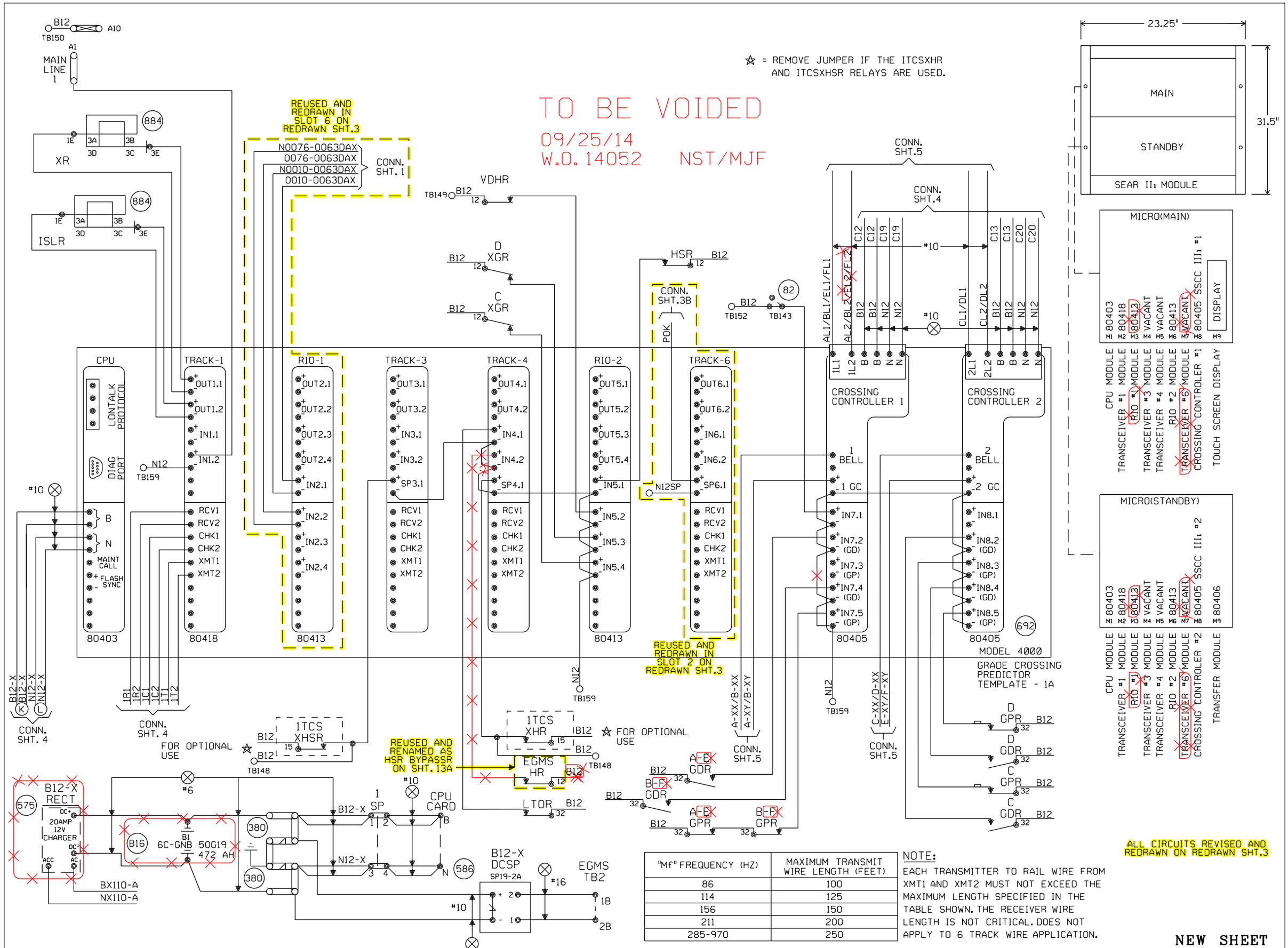

ALL CIRCUITS REVISED AND REDRAWN ON REDRAWN SHT.3

"Mf" FREQUENCY (HZ)	MAXIMUM TRANSMIT WIRE LENGTH (FEET)
86	100
114	125
156	150
211	200
285-970	250

NOTE:
EACH TRANSMITTER TO RAIL WIRE FROM XMT1 AND XMT2 MUST NOT EXCEED THE MAXIMUM LENGTH SPECIFIED IN THE TABLE SHOWN. THE RECEIVER WIRE LENGTH IS NOT CRITICAL. DOES NOT APPLY TO 6 TRACK WIRE APPLICATION.

NEW SHEET

Designed: 3/09/12
TIER 3 PHASE 1
M.P.202.30 TO M.P.194.80
UPGRADE XINGS TO 4 QUAD WITH EGMS, VARIOUS CP'S
Rec*: WO#14052
IS: MWK/ /NST/MJF

MODIFICATION LEVEL	
Q. A. LAST LEVEL CHECKED	DU
LAST LEVEL MOD THIS TYPICAL	DU
LAST LEVEL BY DESIGNER	DU
CHANGED FROM TYPICAL?	Y

REV 01.24.11 4K 2TKEGMS.3

CIRCUIT MODIFICATIONS ARE NOT TO BE MADE WITHOUT AUTHORITY FROM THE OFFICE OF SIGNAL DESIGN

Date: 03/09/12
Des: NST
Chk: MWK
AFE: 14052

UNION PACIFIC RAILROAD
AUBURN, ILLINOIS
MADISON STREET
SPRINGFIELD SUBDIVISION
Office of AVP Engineering - Signal Omaha, Nebraska

Sh.: 3
DOT 294346N
MP: 200.63
ID: CSL20063.3X

Minimum Program Steps Report

Location and SIN

DOT Number: 294346N
Milepost Number: 200.63
Site Name: AUBURN, IL

SIN: 762010010016 *

* Parameter is part of office check number calculation.

MCF and Template Selection

MCF Name: GCP-T6X-02-4.mcf
MCF Revision: 24
MCFCRC: 09FC363B

Template = 1A:6 Trk Bi (OCCN) *

* Parameter is part of office check number calculation.

Minimum Program Steps

TEMPLATE: module configuration
Track 2/RIO 1 Slot = RIO (OCCN) *
Track 5/RIO 2 Slot = RIO (OCCN) *

TEMPLATE: track 1-Bi, Island
Track 1 : GCP Frequency = 525 Hz (Field,TCN)
Track 1 : Approach Distance = 2614 ft (Set in Field,TCN)
Track 1 : Prime UAX = IP (OCCN) *
Track 1 : Prime UAX Pickup = 15 sec (OCCN) *
Track 1 : GCP Transmit Level = Medium (Set in Field,TCN)
Track 1 : Isl Frequency = 7.1 kHz (Set in Field)

TEMPLATE: AND 1 XR
AND 1 Enable Used = Yes (OCCN) *

TEMPLATE: SSCC
SSCC-2 Number of GPs = 2 (OCCN) *
SSCC-2 Number of GDs = 2 (OCCN) *
SSCC 1 : Lamp Neutral Test = Off (Set in Field)
SSCC 2 : Lamp Neutral Test = Off (Set in Field)

TEMPLATE: OOS
OOS Control = OOS IPs (OCCN) *

TEMPLATE: OP assignment 1
OUT 1.1 = AND 1 XR (OCCN) *
OUT 1.2 = T1 Island (OCCN) *

TEMPLATE: IP assignment 1
IN 1.2 = Out Of Service IP 1 (OCCN) *
IN 2.1 = T1 Prime UAX (OCCN) *
IN 2.2 = T1 Prime UAX (OCCN) *

TEMPLATE: IP assignment 2
IN 5.1 = AND 1 XR Enable (OCCN) *
IN 5.2 = GP 1.1 (OCCN) *

TEMPLATE: IP assignment SSCC
IN 7.1 = AND 1 XR Enable (OCCN) *
IN 7.2 = GD 1.1 (OCCN) *
IN 7.4 = GD 1.2 (OCCN) *
IN 8.2 = GD 2.1 (OCCN) *
IN 8.3 = GP 2.1 (OCCN) *
IN 8.4 = GD 2.2 (OCCN) *
IN 8.5 = GP 2.2 (OCCN) *

TEMPLATE: SEAR
SP 2.1 = Not Used (OCCN) *
SP 3.1 = General 3 (OCCN) *
SP 4.1 = General 4 (OCCN) *
SP 6.1 = POK 1 (OCCN) (Hidden) *

GCP: track 1
Track 1 : Island Distance = 157 ft (Set in Field,TCN)

ISLAND: track 1
Track 1 : Pickup Delay (2s +) = 2 sec (OCCN) *

ADVANCED: site options
Daylight Savings = Off (Set in Field)

SEAR: inputs
SP 2.1 = Not Used (OCCN) (Hidden) *

SEAR: slot 1-4 inputs
IN 4.1 = 3 Vehicle Detect (OCCN) *
IN 4.2 = Vehicle Det Hlth (OCCN) *

SEAR: inputs slot 5
IN 5.3 = General 1 (OCCN) *
IN 5.4 = General 2 (OCCN) *

* Parameter is part of office check number calculation.

Check Numbers

Office Check Number: 17C21A1E
Config. Check Number: 580AA72C
(Based on MCF Revision 24)

Parameters not part of office check number calculation:

Track 1 : GCP Frequency = 525 Hz
Track 1 : Approach Distance = 2614 ft (Set in Field)
Track 1 : GCP Transmit Level = Medium (Set in Field)
Track 1 : Isl Frequency = 7.1 kHz
SSCC 1 : Lamp Neutral Test = Off (Set in Field)
SSCC 2 : Lamp Neutral Test = Off (Set in Field)
Track 1 : Island Distance = 157 ft (Set in Field)
Daylight Savings = Off (Set in Field)

Comments

<none>

Configuration Package File

Filename: CSL20063_294346N.pac
Path: H:\UP\Springfield Sub Tier 3 Ph. 1 11-404-1\PAC Files\200.63\
Date/Time: 7/31/2013 12:16:11

TO BE VOIDED
09/25/14
W.O. 14052 NST/MJF

NEW SHEET

				Designed: 3/09/12 TIER 3 PHASE 1 M.P.202.30 TO M.P.194.80 UPGRADE XINGS TO 4 QUAD WITH EGMS, VARIOUS CP'S Rec#: WO#: 14052 IS: MWK/ / /NST/MJF	**NOTE: Actual OFFSET and ISLAND distances must be verified by field personnel.**	CIRCUIT MODIFICATIONS ARE NOT TO BE MADE WITHOUT AUTHORITY FROM THE OFFICE OF SIGNAL DESIGN	Date: 03/09/12 Des: NST Chk: MWK AFE: 14052	**UNION PACIFIC RAILROAD** AUBURN, ILLINOIS MADISON STREET SPRINGFIELD SUBDIVISION Office of AVP Engineering - Signal Omaha, Nebraska	Sh.: 3A DOT 294346N MP: 200.63 ID: CSL20063.3AX

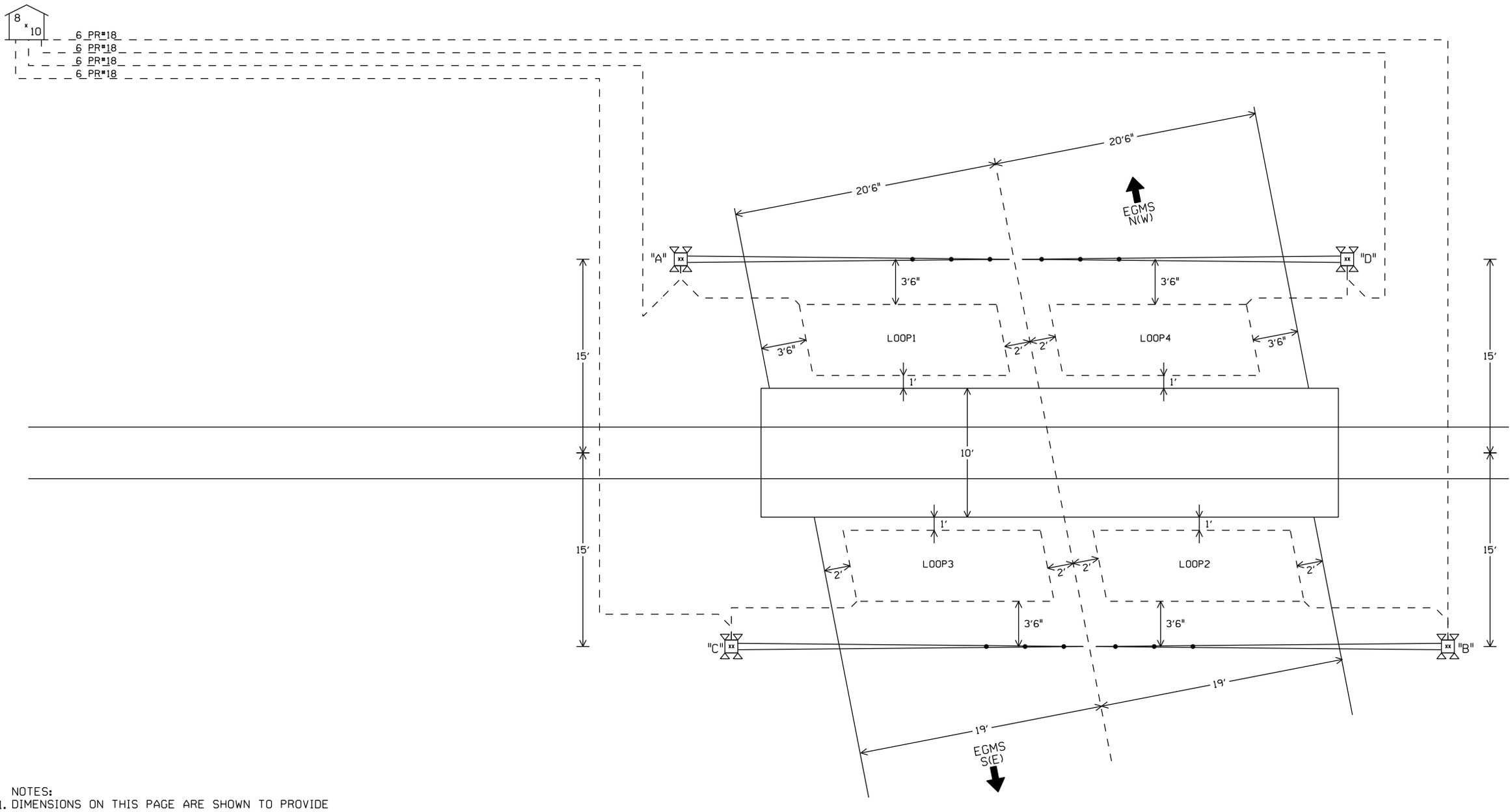

NOTES:

1. DIMENSIONS ON THIS PAGE ARE SHOWN TO PROVIDE GUIDANCE FOR CONSTRUCTION CREWS AND FUTURE MAINTENANCE REPAIRS.
2. REFER TO SAFETRAN EGMS STANDARDS AND RECOMENDED PRACTICES FOR LOOP LAYOUT DESIGN DETAILS.
3. SAFETRAN EGMS JUNCTION BOX INSTALLED ON TOP OF EACH FOUNDATION.
4. INSTALL SAFETRAN 6 PAIR #18 CABLE FROM JUNCTION BOX TO BUNGALOW.

TO BE VOIDED

09/25/14
W.O. 14052 NST/MJF

℄ +

LOOP PLACEMENT SKETCH

NOT TO SCALE

LOOP PARAMETERS

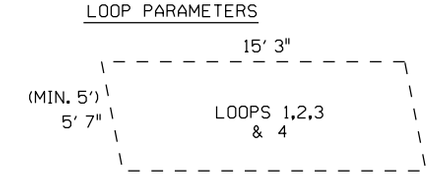

AREA = 83.7 SqFt
PERIMETER =41' 8"

LOOP SIZES

LOOP #	LOOP PERIMETER	LOOP LEAD-IN	PART #
1	42'	25'	PLC-42-25
2	42'	25'	PLC-42-25
3	42'	25'	PLC-42-25
4	42'	25'	PLC-42-25

NEW SHEET

Designed: 3/09/12
TIER 3 PHASE 1
M.P.202.30 TO
M.P.194.80
UPGRADE XINGS TO
4 QUAD WITH EGMS,
VARIOUS CP'S
Rec#: WO#: 14052
IS: MWK/
/ /NST/MJF

MODIFICATION LEVEL	
Q. A. LAST LEVEL CHECKED	DU
LAST LEVEL MOD THIS TYPICAL	DU
LAST LEVEL BY DESIGNER	DU
CHANGED FROM TYPICAL?	Y

REV 01.24.11 4K 2TKEGMS.8B

CIRCUIT MODIFICATIONS ARE NOT TO BE MADE WITHOUT AUTHORITY FROM THE OFFICE OF SIGNAL DESIGN

Date: 03/09/12
Des: NST
Chk: MWK
AFE: 14052

UNION PACIFIC RAILROAD

AUBURN, ILLINOIS
MADISON STREET
SPRINGFIELD SUBDIVISION

Office of AVP Engineering - Signal Omaha, Nebraska

Sh.: 11A
DOT 294346N
MP: 200.63
ID: CSL20063.11AX