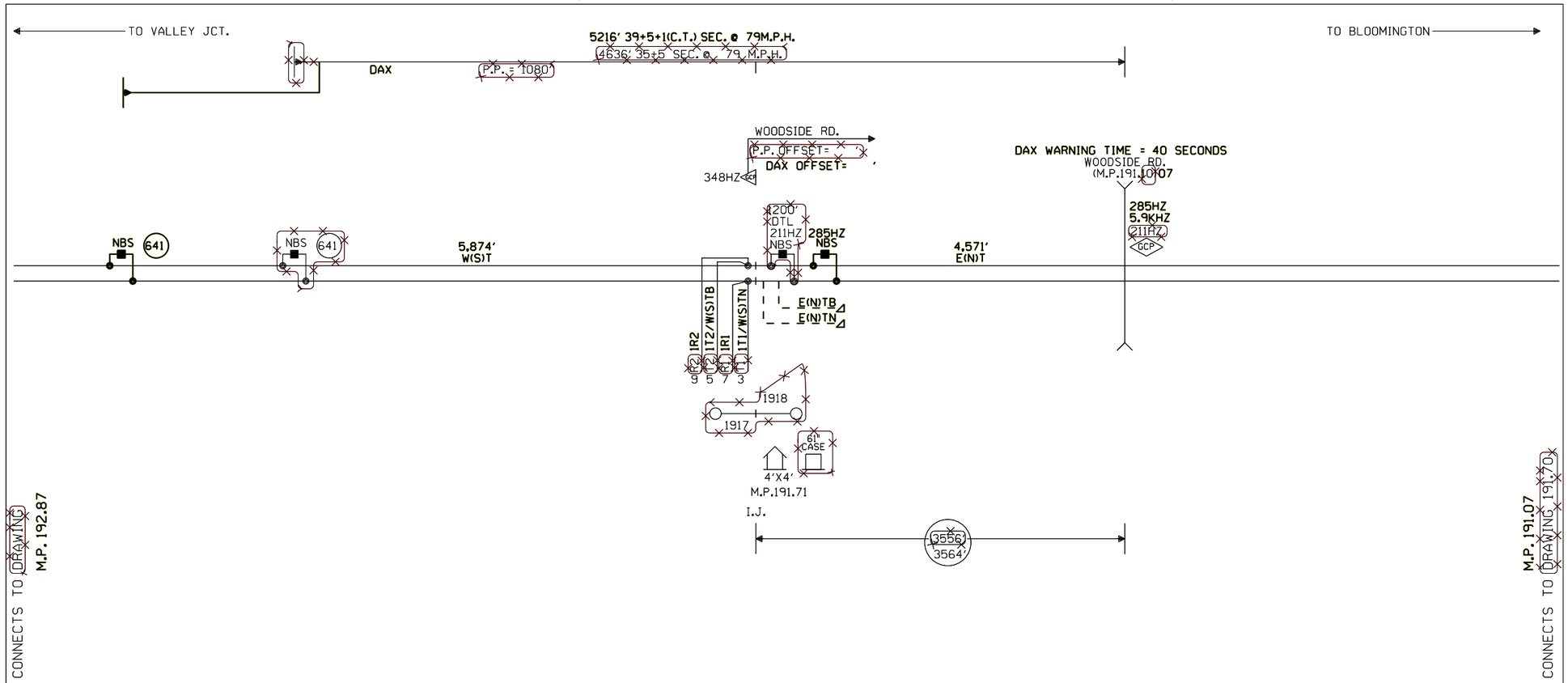

NOTES:

⊗ = TWISTED WIRES
ALL TRACK WIRES 2C. #6
INSULATED 1 TWIST PER FT.

TRANSMITTER AND RECEIVER LEADS
TO BE SEPARATED BY AT LEAST 12" IN TRENCH,
LENGTHS SHOULD NOT EXCEED MANUFACTURES
RECOMMENDATION.

ALL BUNGALOW WIRING TO BE #16 AWG FLEX
UNLESS OTHERWISE SPECIFIED EXCEPT ALL GROUND
WIRE TO BE #6 AWG FLEX OR LARGER.

REFER TO UP STANDARD DWG. FOR BUNGALOW
GROUNDING.

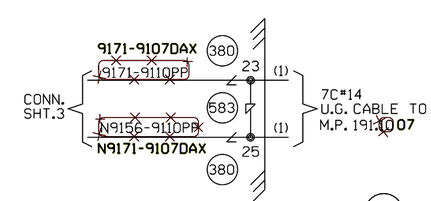

○ = EXISTING/REVISE ORIGINALS IF A.C.'D

—— = IN

-×-×- = OUT

CHATHAM, ILLINOIS
REMOTE LOCATION
M.P. 191.71
SPRINGFIELD SUBDIVISION

S ◄—○—► N

CABLE TABULATION
CABLE N.O. 1 7C#14 TO MP. 191.10)07

				Designed: 6/01/12 TIER 3 PHASE 2 M.P.194.00 TO M.P.177.00 UPGRADE XINGS TO 4 QUAD WITH EGMS. VARIOUS CP'S Rec#: WO#: 14052 IS: MWK/ / /NST/MJF	REV. 9-18-04 RELOCATED EXISTING FLASHERS, GATES & HOUSE W/ CWT AT M.P. 191.10 REC. #12178 I.S. 4-20-04 WJB DVD/WITT/BSD/JNM	MODIFICATION LEVEL		CIRCUIT MODIFICATIONS ARE NOT TO BE MADE WITHOUT AUTHORITY FROM THE OFFICE OF SIGNAL DESIGN	
						Q.A. LAST LEVEL CHK'D.	DD		
						LAST LEVEL MOD. THIS TYP.	DB		
						LAST LEVEL BY DESIGNER.	DE		
						CHANGED FROM TYP.? Y/N	Y		

•• MAKE TITLE BLOCK CHANGES TO ALL SHEETS ••

Date: 03/12/02	UNION PACIFIC RAILROAD	Sh.: 1	
Des: BSD	CHATHAM, ILLINOIS REMOTE LOCATION SPRINGFIELD SUBDIVISION	DOT 000000R	
Chk: JTB/WJB		MP: 191.71	
AFE: 05499	Office of AVP Engineering-Signal Omaha, Nebraska	ID: CSL19171.1x	
DES: BSD	UNION PACIFIC RAILROAD BLOOMINGTON, ILLINOIS TO VALLEY JCT., ILLINOIS C.T.C. CIRCUITS	DATE 3-12-02	
DIG: BSD		SHEET 1	
CHK: JTB/WJB		DWG 191.71	
A.F.E. 05499	Office of AVP Engineering-Signal OMAHA NEBR.	RTE. CSL	
ID: CSL19171.1X			

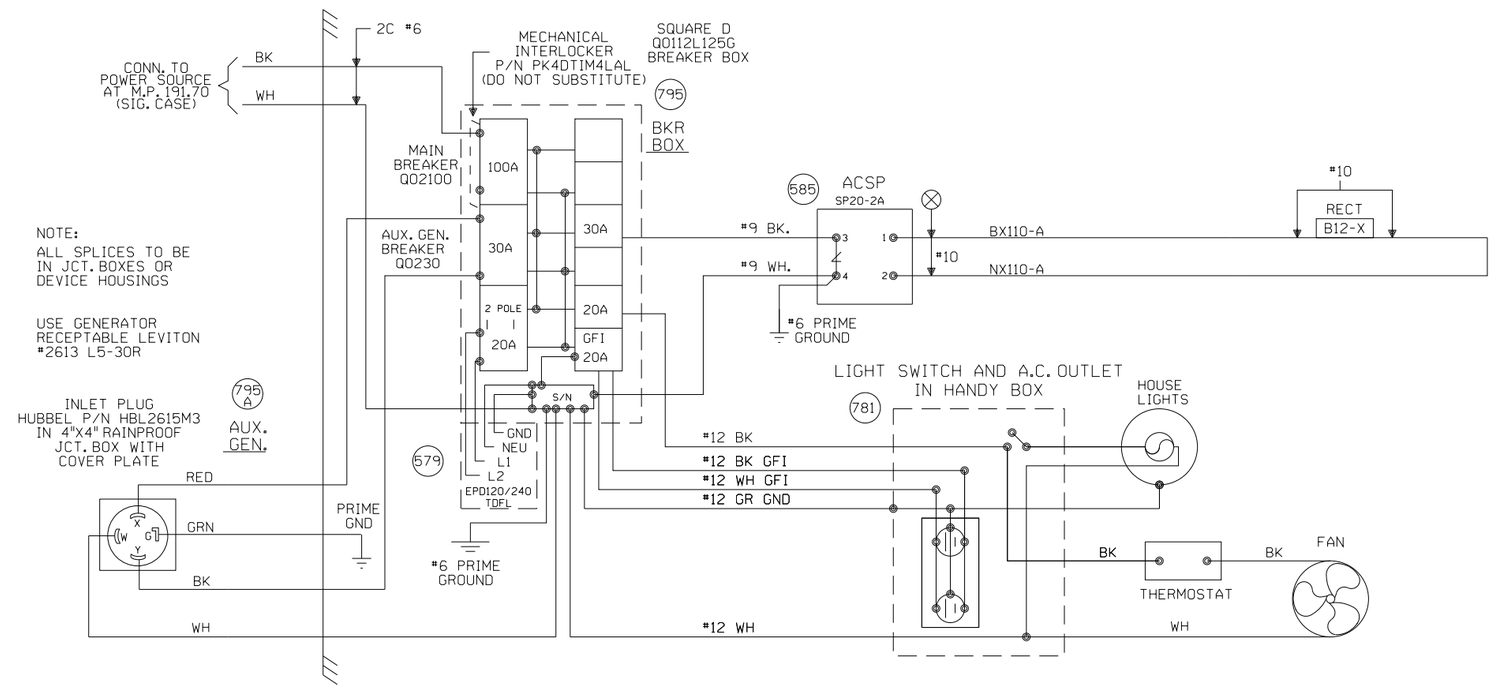

CHATHAM, ILLINOIS
REMOTE LOCATION
M.P. 191.71
SPRINGFIELD SUBDIVISION

					REV. 9-18-04 RELOCATED EXISTING FLASHERS, GATES & HOUSE W/ CWT AT M.P. 191.10 REC. #12178 I.S. 4-20-04 WJB DVD/WITT/BSD/JNM	MODIFICATION LEVEL		CIRCUIT MODIFICATIONS ARE NOT TO BE MADE WITHOUT AUTHORITY FROM THE OFFICE OF SIGNAL DESIGN	DES: BSD	UNION PACIFIC RAILROAD BLOOMINGTON, ILLINOIS TO VALLEY JCT., ILLINOIS C.T.C. CIRCUITS	DATE 3-12-02
						Q.A. LAST LEVEL CHK'D.	DD		DIG: BSD		SHEET 2
						LAST LEVEL MOD. THIS TYP.	DB		CHK: WJB		DWG 191.71
						LAST LEVEL BY DESIGNER.	DE		A.F.E. 05499		
						CHANGED FROM TYP.? Y/N	N		ID= CSL19171.2X	Office of AVP Engineering-Signal OMAHA NEBR.	RTE. CSL

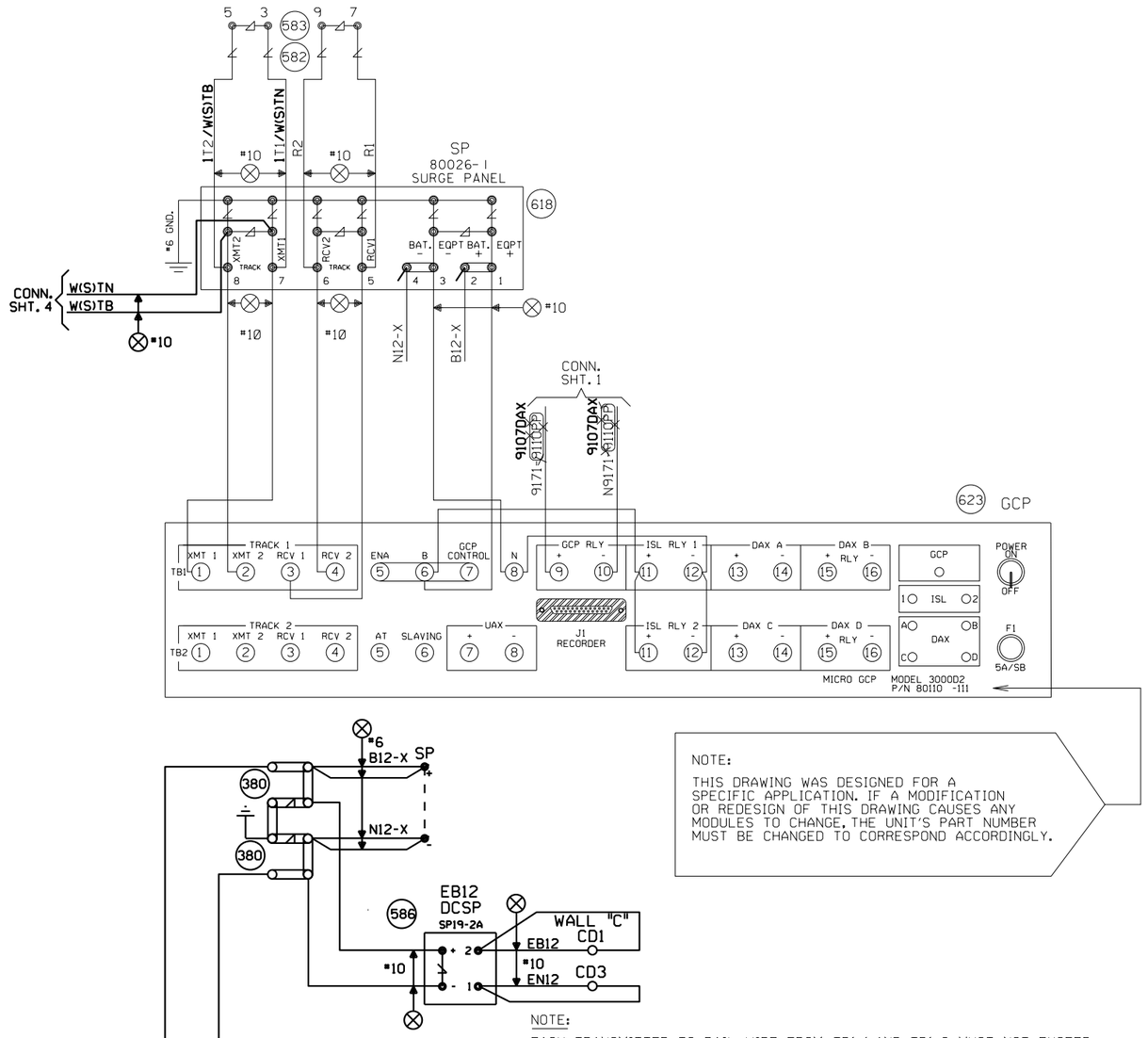

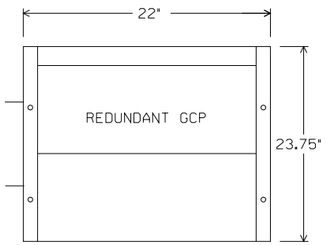

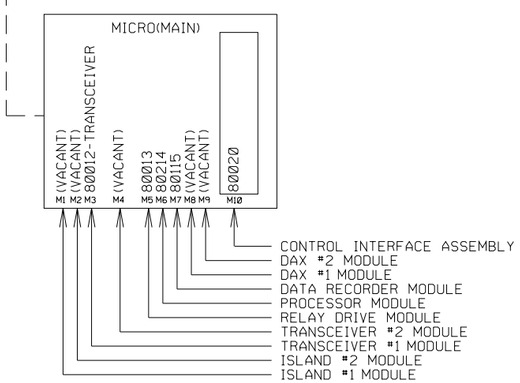

NOTE:

THIS DRAWING WAS DESIGNED FOR A SPECIFIC APPLICATION. IF A MODIFICATION OR REDESIGN OF THIS DRAWING CAUSES ANY MODULES TO CHANGE, THE UNIT'S PART NUMBER MUST BE CHANGED TO CORRESPOND ACCORDINGLY.

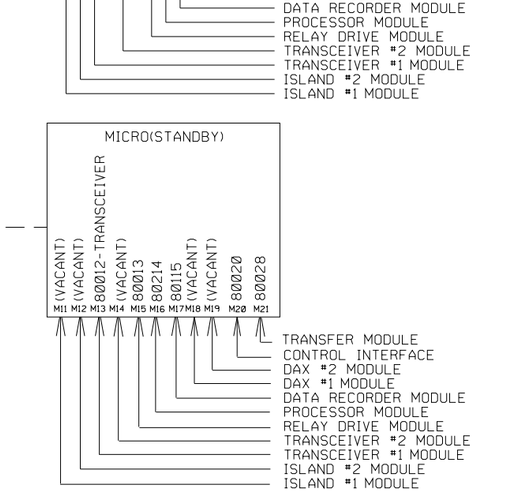

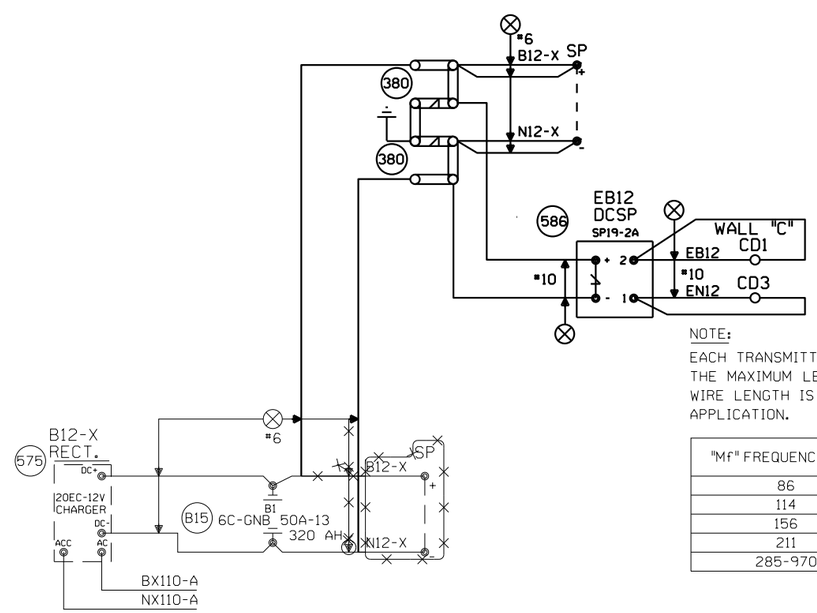

NOTE:

EACH TRANSMITTER TO RAIL WIRE FROM TB1-1 AND TB1-2 MUST NOT EXCEED THE MAXIMUM LENGTH SPECIFIED IN THE TABLE SHOWN BELOW. THE RECEIVER WIRE LENGTH IS NOT CRITICAL. DOES NOT APPLY TO 6 WIRE TRACK APPLICATION.

"Mf" FREQUENCY (HZ)	MAXIMUM TRANSMIT WIRE LENGTH (FEET)
86	100
114	125
156	150
211	200
285-970	250

CHATHAM, ILLINOIS
REMOTE LOCATION
M.P. 191.71
SPRINGFIELD SUBDIVISION

—— = IN
—×—×— = OUT

Designed: 6/01/12
TIER 3 PHASE 2
M.P.194.00 TO
M.P.177.00
UPGRADE XINGS TO
4 QUAD WITH EGMS,
VARIOUS CP'S
Rec": WO": 14052
IS: MWK/
/ /NST/MJF

REV. 9-18-04
RELOCATED EXISTING FLASHERS, GATES & HOUSE W/ CWT AT M.P. 191.10
REC. #12178
I.S. 4-20-04 WJB
DVD/WITT/BSD/JNM

MODIFICATION LEVEL	
Q.A. LAST LEVEL CHK'D.	DD
LAST LEVEL MOD. THIS TYP.	DB
LAST LEVEL BY DESIGNER.	DE
CHANGED FROM TYP.? Y/N	Y

CIRCUIT MODIFICATIONS ARE NOT TO BE MADE WITHOUT AUTHORITY FROM THE OFFICE OF SIGNAL DESIGN

DES: BSD
DIG: BSD
CHK: WJB
A.F.E. 05499
ID= CSL19171.3X

UNION PACIFIC RAILROAD
BLOOMINGTON, ILLINOIS TO
VALLEY JCT., ILLINOIS
C.T.C. CIRCUITS
Office of AVP Engineering-Signal OMAHA NEBR.

DATE 3-12-02
SHEET 3
DWG 191.71
RTE. CSL

NOTES:

EAST= (N)ORTH.
WEST= (S)OUTH.

⊘ = OBSERVE CORRECT POLARITY. EQUIPMENT WILL BE DAMAGED IF CONNECTIONS ARE REVERSED

ALL WIRING TO TRACK 2C. NO.6 U.G.B.T. CABLE UNLESS OTHERWISE SPECIFIED.

ENSURE TRACK POLARITY IS TRANSPOSED ACROSS ALL INSULATED JOINTS.

⧖ = TEST TERMINALS MUST BE INSTALLED ON ALL WIRING CONNECTED TO EXTERNAL CABLES (EXCEPT TRACK AND A.C. POWER WIRES).

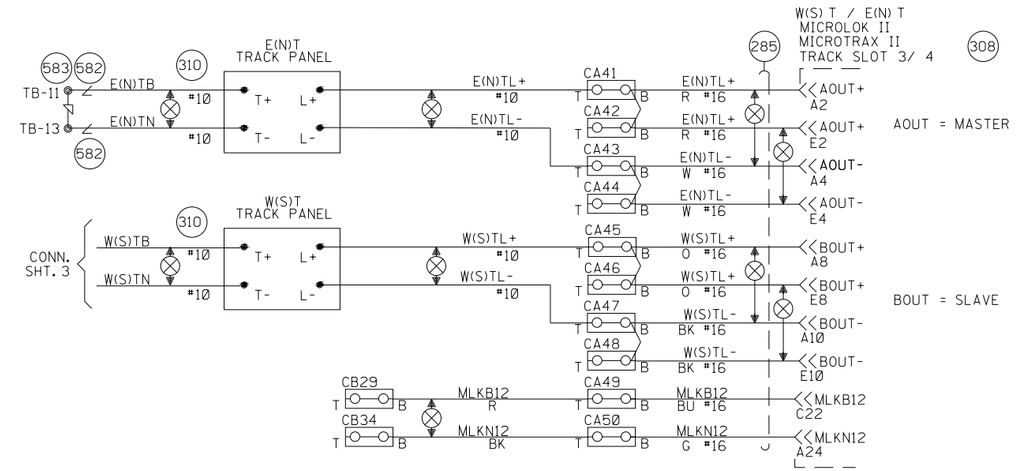

NEW SHEET

					Designed: 6/01/12 TIER 3 PHASE 2 M.P.194.00 TO M.P.177.00 UPGRADE XINGS TO 4 QUAD WITH EGMS, VARIOUS CP'S Rec': WO#:14052 ISs: MWK/ / /NST/MJF	MODIFICATION LEVEL		CIRCUIT MODIFICATIONS ARE NOT TO BE MADE WITHOUT AUTHORITY FROM THE OFFICE OF SIGNAL DESIGN	Date: 06/01/12	UNION PACIFIC RAILROAD	Sh.: 4
						O. A. LAST LEVEL CHECKED	DU		Des: NST	CHATHAM, ILLINOIS	DOT 000000R
						LAST LEVEL MOD THIS TYPICAL	DU		Chk: MWK	REMOTE LOCATION	MP: 191.71
						LAST LEVEL BY DESIGNER	DU		AFE: 14052	SPRINGFIELD SUBDIVISION	ID: CSL19171.4S
						CHANGED FROM TYPICAL?	Y			Office of AVP Engineering-Signal Omaha, Nebraska	
						REV 8/20/10 1TMLHBINTU.1					

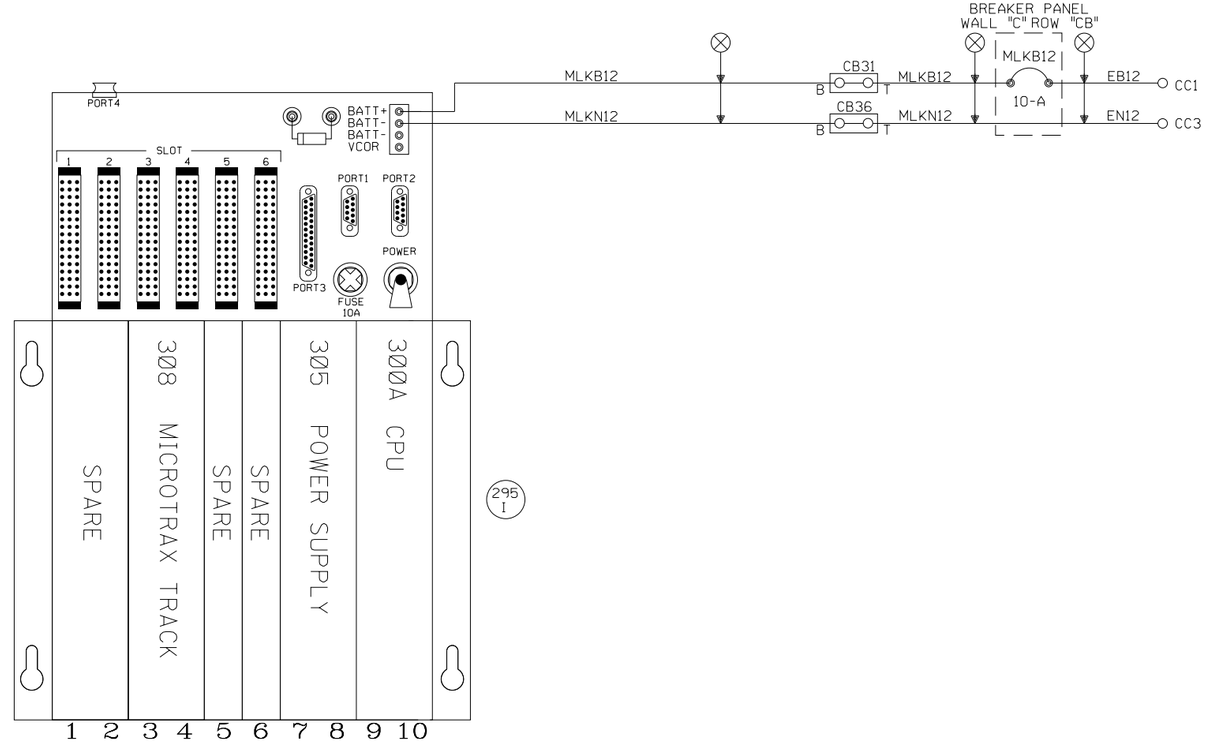

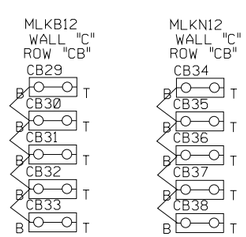

NEW SHEET

					Designed 6/01/12 TIER 3 PHASE 2 M.P.194.00 TO M.P.177.00 UPGRADE XINGS TO 4 QUAD WITH EGMS, VARIOUS CP'S Rec'd: WO#:14052 IS: MWK/ / /NST/MJF	MODIFICATION LEVEL		CIRCUIT MODIFICATIONS ARE NOT TO BE MADE WITHOUT AUTHORITY FROM THE OFFICE OF SIGNAL DESIGN	Date: 06/01/12	UNION PACIFIC RAILROAD	Sh.: 5
						O. A. LAST LEVEL CHECKED	DU		Des: NST	CHATHAM, ILLINOIS	DOT 000000R
						LAST LEVEL MOD THIS TYPICAL	DU		Chk: MWK	REMOTE LOCATION	MP: 191.71
						LAST LEVEL BY DESIGNER	DU		AFE: 14052	SPRINGFIELD SUBDIVISION	ID: CSL19171.5S
						CHANGED FROM TYPICAL?	Y			Office of AVP Engineering-Signal Omaha, Nebraska	

REV 8/20/10 1TML.HBINTU.4

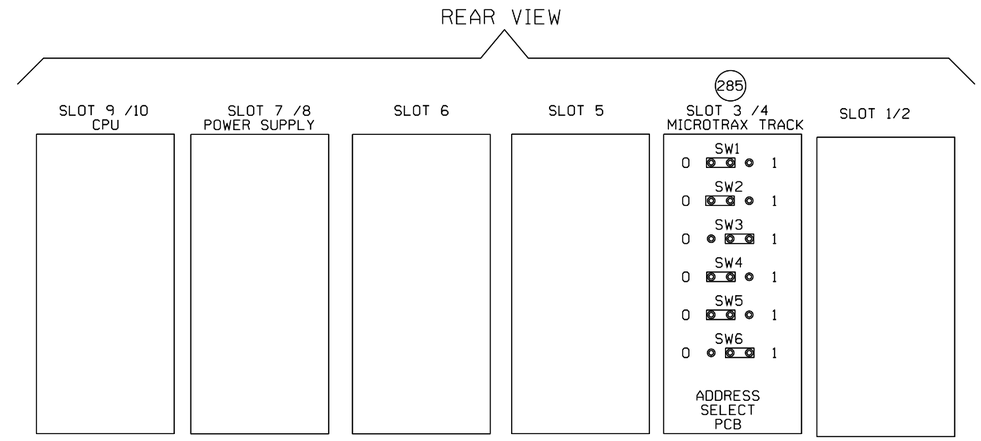

NOTE: FOR PTC COMPATIBLE CPU JUMPER SETTINGS REFER TO
ANSALDO MANUAL 1D1.0028 PAGE 1-26 1-27 1-28 REV.1 DATE 8/2009

ML8RRH

15 SEC SLOW PICK ET TO PREVENT JOINT HOP	
15 SEC SLOW PICK WT TO PREVENT JOINT HOP	
PROGRAM ID 1 (BINARY 1)	
PROGRAM ID 2 (BINARY 2)	
PROGRAM ID 3 (BINARY 4)	X
PROGRAM ID 4 (BINARY 8)	
PROGRAM ID 5 (BINARY 16)	
PROGRAM ID 6 (BINARY 32)	X
PROGRAM ID 7 (BINARY 64)	X
PROGRAM ID 8 (BINARY 128)	
CODE P?	

NEW SHEET

Designed: 6/01/12
TIER 3 PHASE 2
M.P.194.00 TO
M.P.177.00
UPGRADE XINGS TO
4 QUAD WITH EGMS,
VARIOUS CP'S
Rec': MWK/
IS: / /NST/MJF
WO#: 14052

MODIFICATION LEVEL	
O. A. LAST LEVEL CHECKED	DU
LAST LEVEL MOD THIS TYPICAL	DU
LAST LEVEL BY DESIGNER	DU
CHANGED FROM TYPICAL?	Y

REV 8/20/10 ITM.HBINTU.5

CIRCUIT MODIFICATIONS ARE NOT TO BE MADE WITHOUT AUTHORITY FROM THE OFFICE OF SIGNAL DESIGN

Date: 06/01/12
Des: NST
Chk: MWK
AFE: 14052

UNION PACIFIC RAILROAD

CHATHAM, ILLINOIS
REMOTE LOCATION
SPRINGFIELD SUBDIVISION

Office of AVP Engineering-Signal Omaha, Nebraska

Sh.: 6
DOT 000000R
MP: 191.71
ID: CSL19171.6S

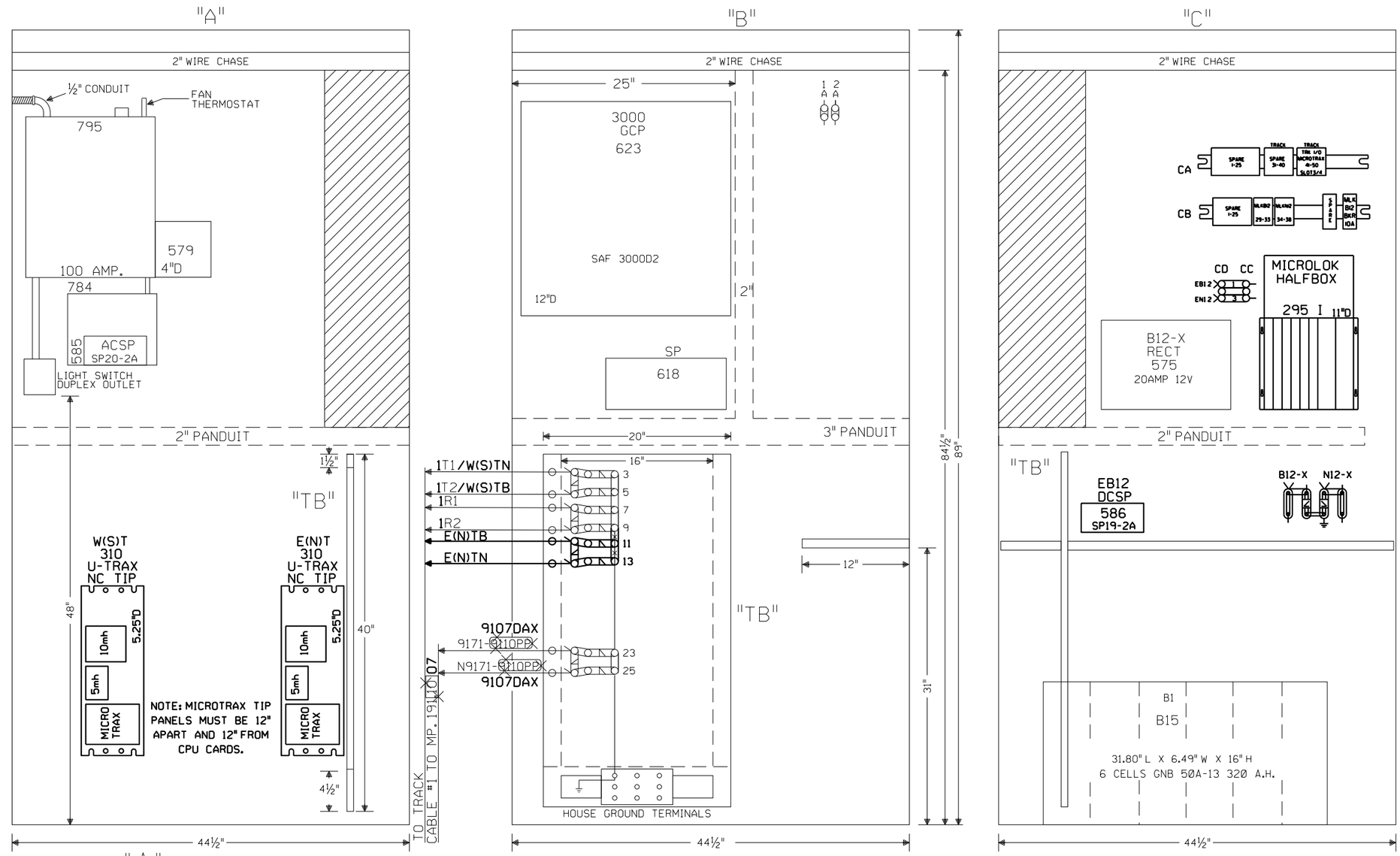

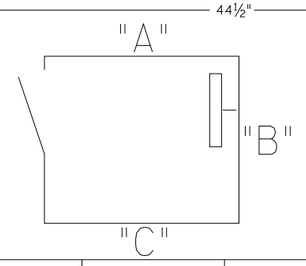

NOTE: ALL DIMENSIONS SHOWN ARE APPROXIMATE.

0 1 2 3 4 FEET

SCALE: 1.5 INCHES = 1 FOOT

CHATHAM, ILLINOIS
REMOTE GCP LOCATION
M.P. 191.71
SPRINGFIELD SUBDIVISION

= IN
= OUT

Designed 6/01/12 TIER 3 PHASE 2 M.P.194.00 TO M.P.177.00 UPGRADE XINGS TO 4 QUAD WITH EGMS, VARIOUS CP'S Rec#: 15: WO#: 14052 MWK/ / /NST/MJF	REV. 9-18-04 RELOCATED EXISTING FLASHERS, GATES & HOUSE W/ CWT AT M.P. 191.10 REC. #12178 I.S. 4-20-04 WJB DVD/WITT/BSD/JNM	MODIFICATION LEVEL Q.A. LAST LEVEL CHK'D. DD LAST LEVEL MOD. THIS TYP. DB LAST LEVEL BY DESIGNER. DE CHANGED FROM TYP.? Y/N Y	CIRCUIT MODIFICATIONS ARE NOT TO BE MADE WITHOUT AUTHORITY FROM THE OFFICE OF SIGNAL DESIGN

DES: BSD
DIG: BSD
CHK: WJB
A.F.E. 05499
ID=CSL1917~~1~~4X 7X

UNION PACIFIC RAILROAD
BLOOMINGTON, ILLINOIS
VALLEY, JCT., ILLINOIS
C.T.C. CIRCUITS
Office of AVP Engineering-Signal OMAHA NEBR.

DATE 3-12-02
SHEET ~~4~~ 7
DWG 191.71
RTE. CSL

(REV. 01.02.21) (GCPRMOTE.4)