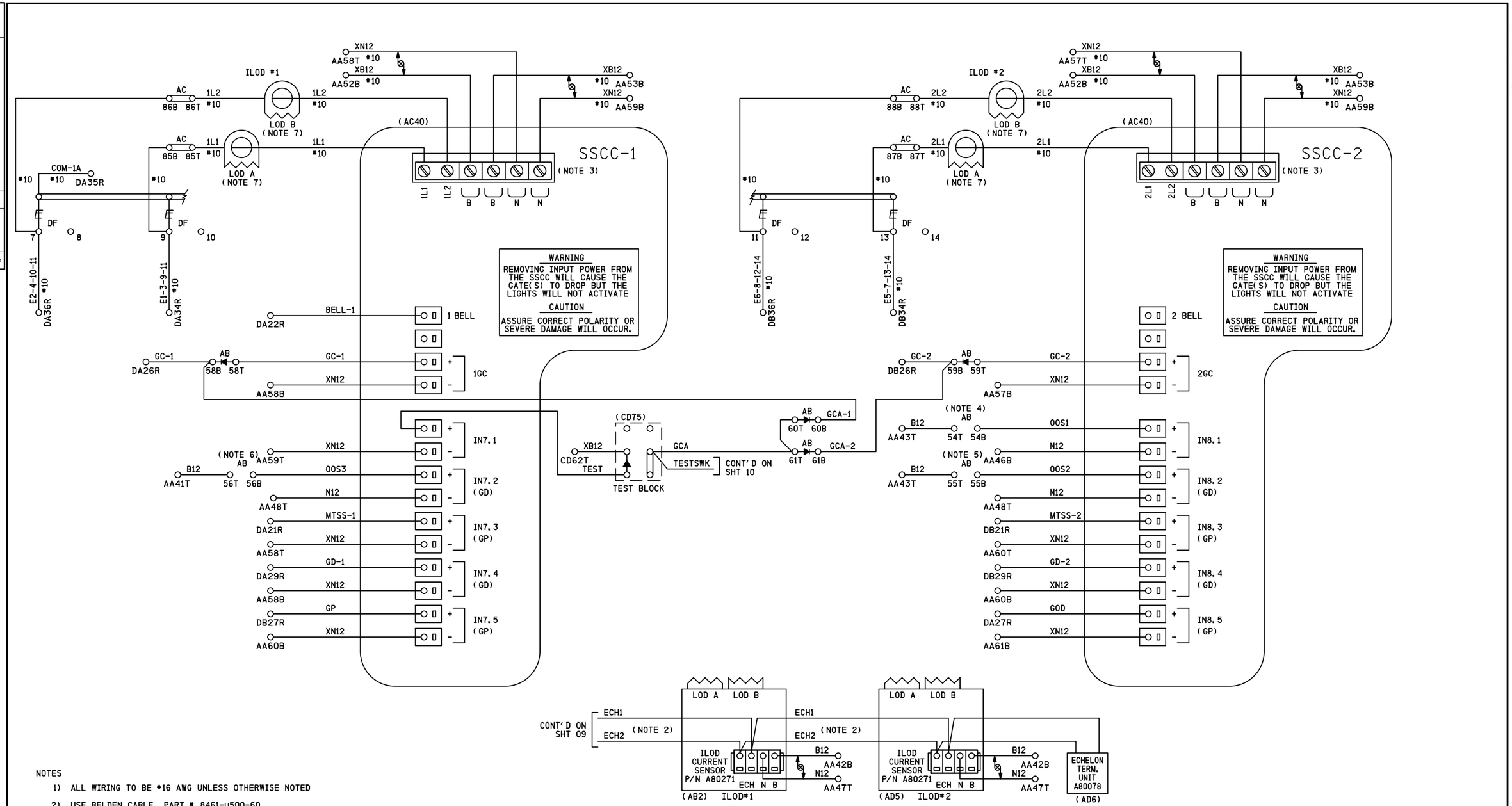

NOTES

1) ALL WIRING TO BE #16 AWG UNLESS OTHERWISE NOTED
2) USE BELDEN CABLE, PART # 8461-u500-60 FOR ALL ECHELON AND LAN WIRING
3) ENSURE CONNECTIONS ARE SECURED IN PLACE BY SCREW LOCKING MECHANISM
4) TO TAKE TRACK 1 (T1 & T4) OUT OF SERVICE, JUMPER AB54T TO AB54B
5) TO TAKE TRACK 2 (T2) OUT OF SERVICE, JUMPER AB55T TO AB55B
6) TO TAKE TRACK 3 (T3 & T5) OUT OF SERVICE, JUMPER AB56T TO AB56B
7) LOOP WIRE THROUGH LOD TWO (2) TIMES

DENOTES RECTIFIER, SAFETRAN PART # 8002A299006

DENOTES TWISTED PAIR

SII 25 JUN 2014

PROPOSED
DESIGN NO. 14-0068
RED-IN YELLOW-OUT

AS INSTALLED
DATE
BY
(PRINT NAME)

PROPOSED D	M	Y	REVISIONS	D	C	COMPLETED D	M	Y	C

REGION SOUTHERN
SUB. CHICAGO 340

SIGNALS AND COMMUNICATIONS HOMEWOOD
25 JUNE 2014
DES. TMF
CH. MRB

GCP 4000/SSCCIIII
GATE CONTROLLERS W/ ILODS
GILMAN, IL
DENT STREET

CHI-081.24-11

DOT# 288 989V

chi-081.24-11.dgn
16-JUN-2015

REVISIONS				
NO.	DATE	BY	DESCRIPTION	APP. BY
1				
2				
3				
4				
5				

SIEMENS INDUSTRY INC

DES. : TMF	DATE: 25/06/14	JOB NO.: WCNA10382	
CKD. : MRB	ISSUE DATE: N/A	EST. NO.: XP-7259	
DRN. : TMF	PLAN NO.: N/A	SHEET 11 OF 34	
P TIME: 11:25	P DATE: 16-JUN-2015	CAD ID.: CHI-081.24-11	

SIEMENS INDUSTRY INC
LOUISVILLE DIVISION, LOUISVILLE, KY

CONTACT	CLOSED AT	FUNCTION
6	70° -90°	POWER DOWN CONTROL
7	0° -89°	POWER UP CONTROL
8	83° -90°	FLASHING LGT. CONTROL
9	5° -90°	BELL CONTROL
10	0° -5°	GATE DOWN INDICATION
11	N/A	SPARE
12	N/A	SPARE

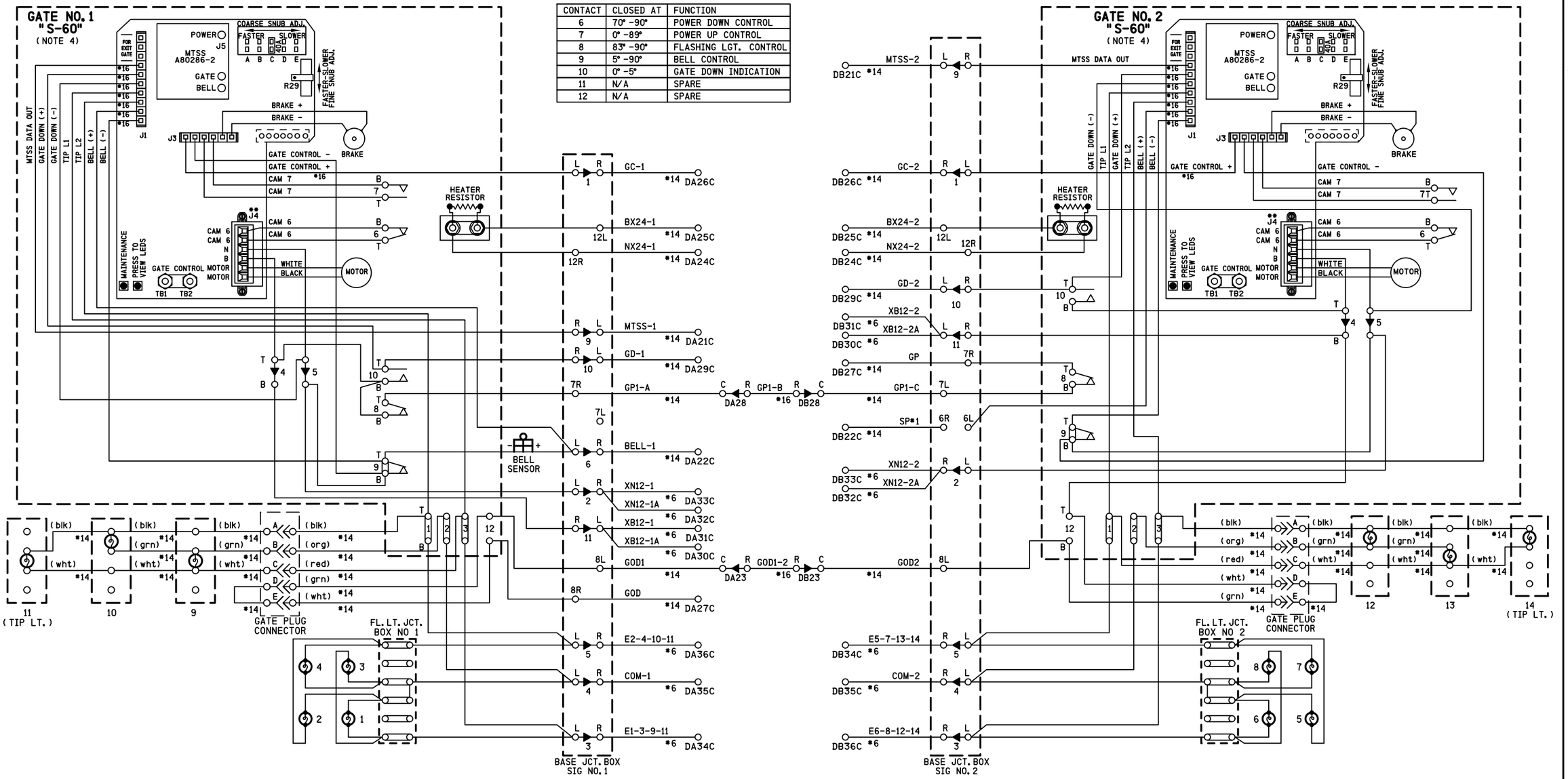

NOTES

1) ON GATE No. 1 ADD JUMPER BETWEEN TERMINALS:
   ADD JUMPER BETWEEN TERMINAL 4T & 10B,
   ADD JUMPER BETWEEN TERMINAL 8B & 10B,
   ADD JUMPER BETWEEN TERMINAL 5B & 9B
2) ON GATE No. 2 ADD JUMPER BETWEEN TERMINALS:
   ADD JUMPER BETWEEN TERMINAL 4T & 10B,
   ADD JUMPER BETWEEN TERMINAL 5B & 9B,
   ADD JUMPER BETWEEN TERMINAL 4B & 12T
3) ALL WIRING #10 AWG UNLESS OTHERWISE NOTED
4) GATE DESCENT TIME (RELEASE FROM VERTICAL TO FULLY HORIZONTAL) TO BE WITHIN 11 SECONDS
5) BELL CUT-OUT (5° -90°) WHEN REQUIRED REMOVE STRAP BETWEEN 9B AND 9T
6) ENSURE ALL TERMINALS HAVE TWO SHOULDER NUTS

SII 25 JUN 2014

PROPOSED
DESIGN NO. 14-0068
RED-IN YELLOW-OUT

AS INSTALLED
DATE _____
BY _____
(PRINT NAME)

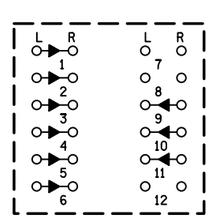

TERMINAL NUMBERING BASE JCT. BOX 1

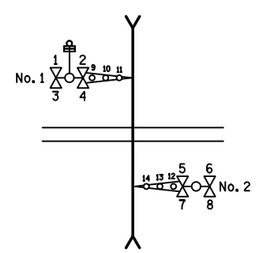

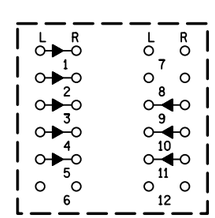

TERMINAL NUMBERING BASE JCT. BOX 2

PROPOSED D	M	Y	REVISIONS	D	C	COMPLETED D	M	Y	C

REGION SOUTHERN
SUB. CHICAGO 340

SIGNALS AND COMMUNICATIONS HOMEWOOD
25 JUNE 2014
DES. TMF
CH. MRB

GATE 1 & 2 MECH. CONTROL CIRCUITS
SAFETRAN S-60
GILMAN, IL

DENT STREET

CHI-081.24-12

DOT# 288 989V

SIEMENS INDUSTRY INC
LOUISVILLE DIVISION, LOUISVILLE, KY

SIEMENS INDUSTRY INC
DES.: TMF | DATE: 25/06/14 | JOB NO.: WCNA10382
CKD.: MRB | ISSUE DATE: N/A | EST. NO.: XP-7259
DRN.: TMF | PLAN NO.: N/A | SHEET 12 OF 34
P TIME: 11:25 | P DATE: 16-JUN-2015 | CAD ID.: CHI-081.24-12

NO.	DATE	BY	REVISIONS DESCRIPTION	APP. BY
1				
2				
3				
4				
5				

chi-081.24-12.dgn
16-JUN-2015

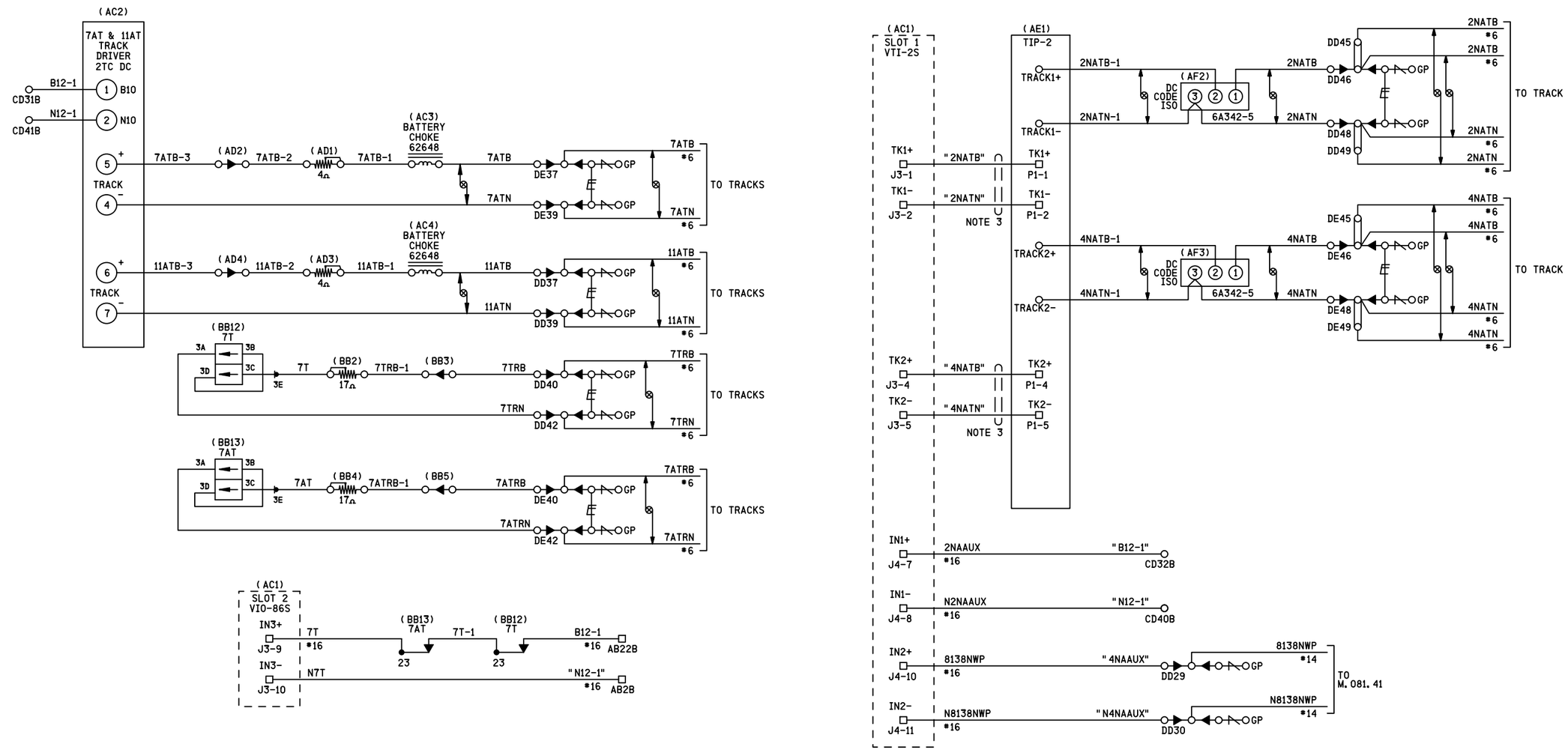

REVISIONS			
NO.	DATE	BY	DESCRIPTION	APP. BY
1				
2				
3				
4				
5				

SIII 25 JUN 2014

PROPOSED
DESIGN NO. 14-0068
RED-IN YELLOW-OUT

AS INSTALLED
DATE _____
BY _____
(PRINT NAME)

NOTES
1) CIRCUITS TO BE #10 AWG UNLESS OTHERWISE NOTED
2) GP INDICATES GROUND PLANE
3) 8' TIP-2 CABLE HPN 814-096000-017

-DENOTES TWISTED PAIR

" " -DENOTES REFERENCE, NOT WIRE TAG

GP L C R DENOTES THRU TERMINAL

PROPOSED D	M	Y	REVISIONS	D	C	COMPLETED D	M	Y	C

REGION SOUTHERN
SUB. CHICAGO 340

SIGNALS AND COMMUNICATIONS HOMEWOOD
25 JUNE 2014
DES. TMF
CH. MRB

TRACK CIRCUITS
GILMAN, IL
DENT STREET
CHI-081.24-13

DOT# 288 989V

SIEMENS INDUSTRY INC
LOUISVILLE DIVISION, LOUISVILLE, KY

SIEMENS INDUSTRY INC

DES.: TMF	DATE: 25/06/14	JOB NO.: WCNA10382	
CKD.: MRB	ISSUE DATE: N/A	EST. NO.: XP-7259	
DRN.: TMF	PLAN NO.: N/A	SHEET 13 OF 34	
P TIME: 11:25	P DATE: 16-JUN-2015	CAD ID.: CHI-081.24-13	

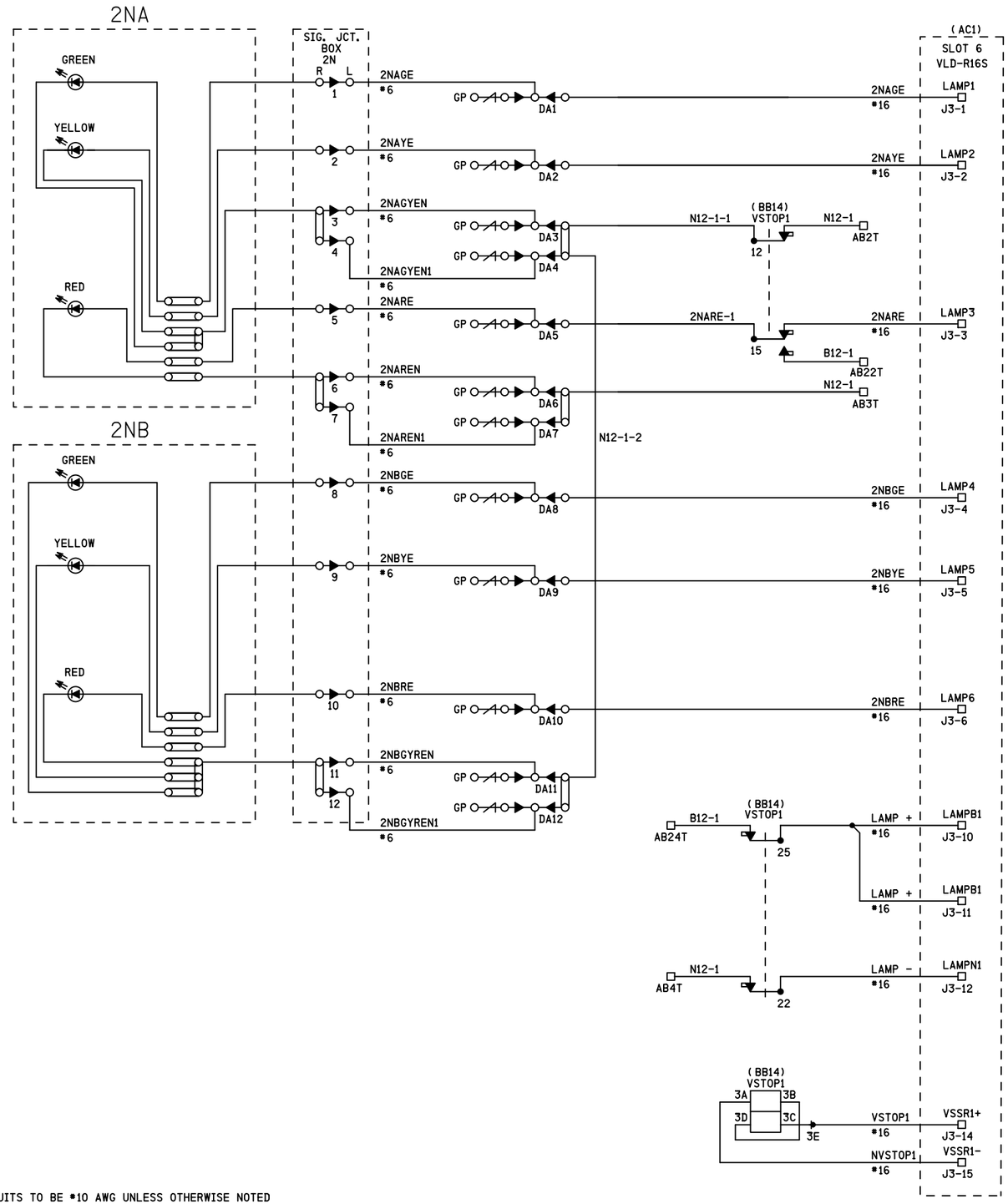

NOTES
1) CIRCUITS TO BE *10 AWG UNLESS OTHERWISE NOTED
2) GP INDICATES GROUND PLANE

GP L C R DENOTES THRU TERMINAL

REVISIONS				
NO.	DATE	BY	DESCRIPTION	APP. BY
1				
2				
3				
4				
5				

SIEMENS INDUSTRY INC

DES. : TMF	DATE: 25/06/14	JOB NO. : WCNA10382	
CKD. : MRB	ISSUE DATE: N/A	EST. NO. : XP-7259	
DRN. : TMF	PLAN NO. : N/A	SHEET 14 OF 34	
P TIME: 11:25	P DATE: 16-JUN-2015	CAD ID. : CHI-081.24-14	

SIEMENS INDUSTRY INC
LOUISVILLE DIVISION, LOUISVILLE, KY

chi-081.24-14.dgn
16-JUN-2015

SII 25 JUN 2014

PROPOSED
DESIGN NO. 14-0068
RED-IN YELLOW-OUT

AS INSTALLED
DATE _____
BY _____
(PRINT NAME)

PROPOSED			REVISIONS	D	C	COMPLETED			C
D	M	Y				D	M	Y	

REGION SOUTHERN
SUB. CHICAGO 340

SIGNALS AND COMMUNICATIONS HOMEWOOD
25 JUNE 2014
DES. TMF
CH. MRB

2N SIG CONTROL CIRCUITS
GILMAN, IL
DENT STREET

CHI-081.24-14

DOT# 288 989V

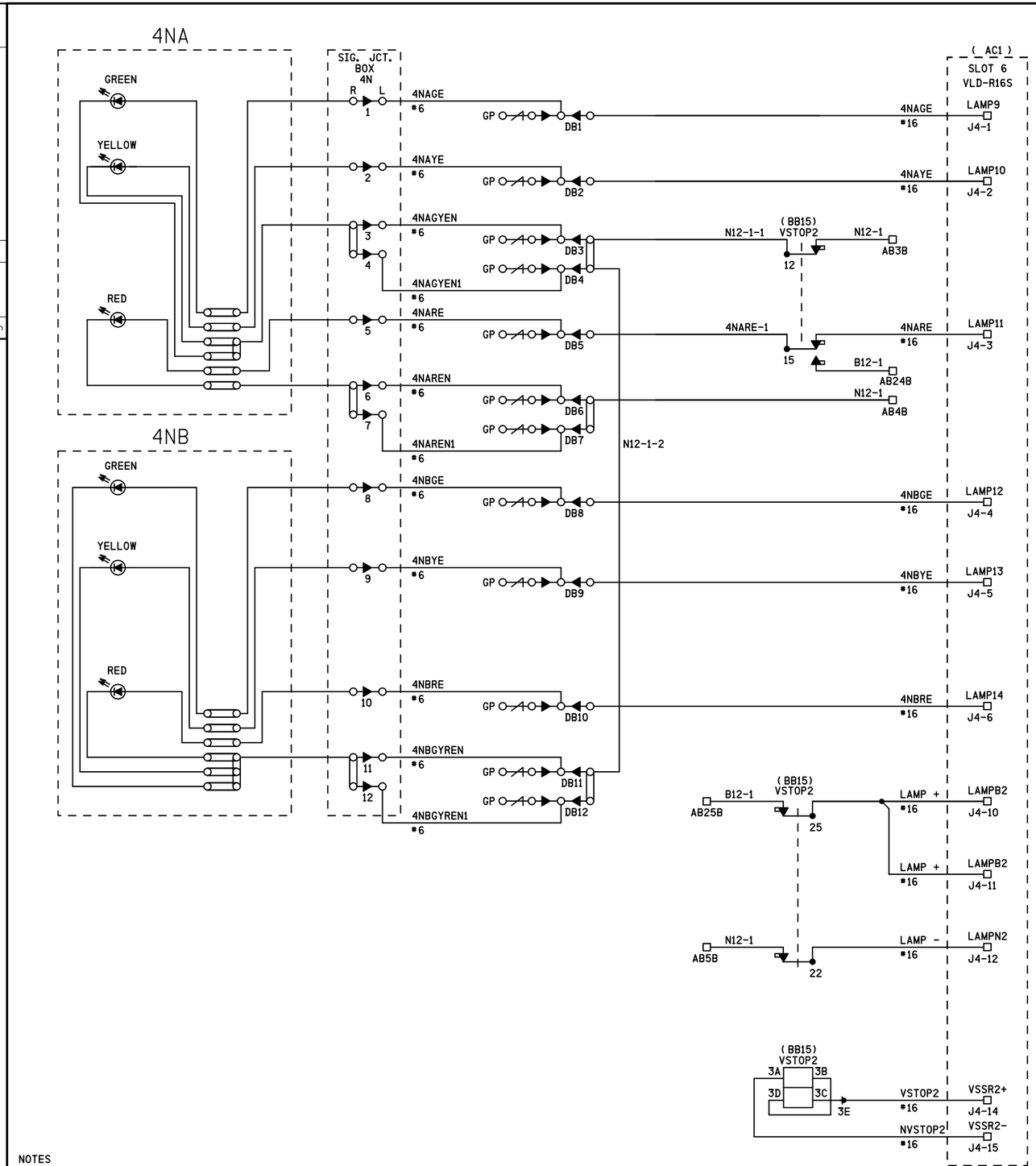

NOTES
1) CIRCUITS TO BE #10 AWG UNLESS OTHERWISE NOTED
2) GP INDICATES GROUND PLANE

GP L C R DENOTES THRU TERMINAL

REVISIONS				
NO.	DATE	BY	DESCRIPTION	APP. BY
1				
2				
3				
4				
5				

SIEMENS INDUSTRY INC

DES. : TMF	DATE: 25/06/14	JOB NO. : WCNA10382	
CKD. : MRB	ISSUE DATE: N/A	EST. NO. :XP-7259	
DRN. : TMF	PLAN NO. :N/A	SHEET 15 OF 34	
P TIME:11:25	P DATE: 16-JUN-2015	CAD ID. : CHI-081.24-15	

SIEMENS INDUSTRY INC
LOUISVILLE DIVISION, LOUISVILLE, KY

chi-081.24-15.dgn
16-JUN-2015

SII 25 JUN 2014

PROPOSED
DESIGN NO. 14-0068
RED-IN YELLOW-OUT

AS INSTALLED
DATE _____
BY _____
(PRINT NAME)

PROPOSED			REVISIONS	D	C	COMPLETED			C
D	M	Y				D	M	Y	

REGION SOUTHERN
SUB. CHICAGO 340

SIGNALS AND COMMUNICATIONS HOMEWOOD
25 JUNE 2014
DES. TMF
CH. MRB

4N SIG CONTROL CIRCUITS
GILMAN, IL
DENT STREET

CHI-081.24-15

DOT# 288 989V

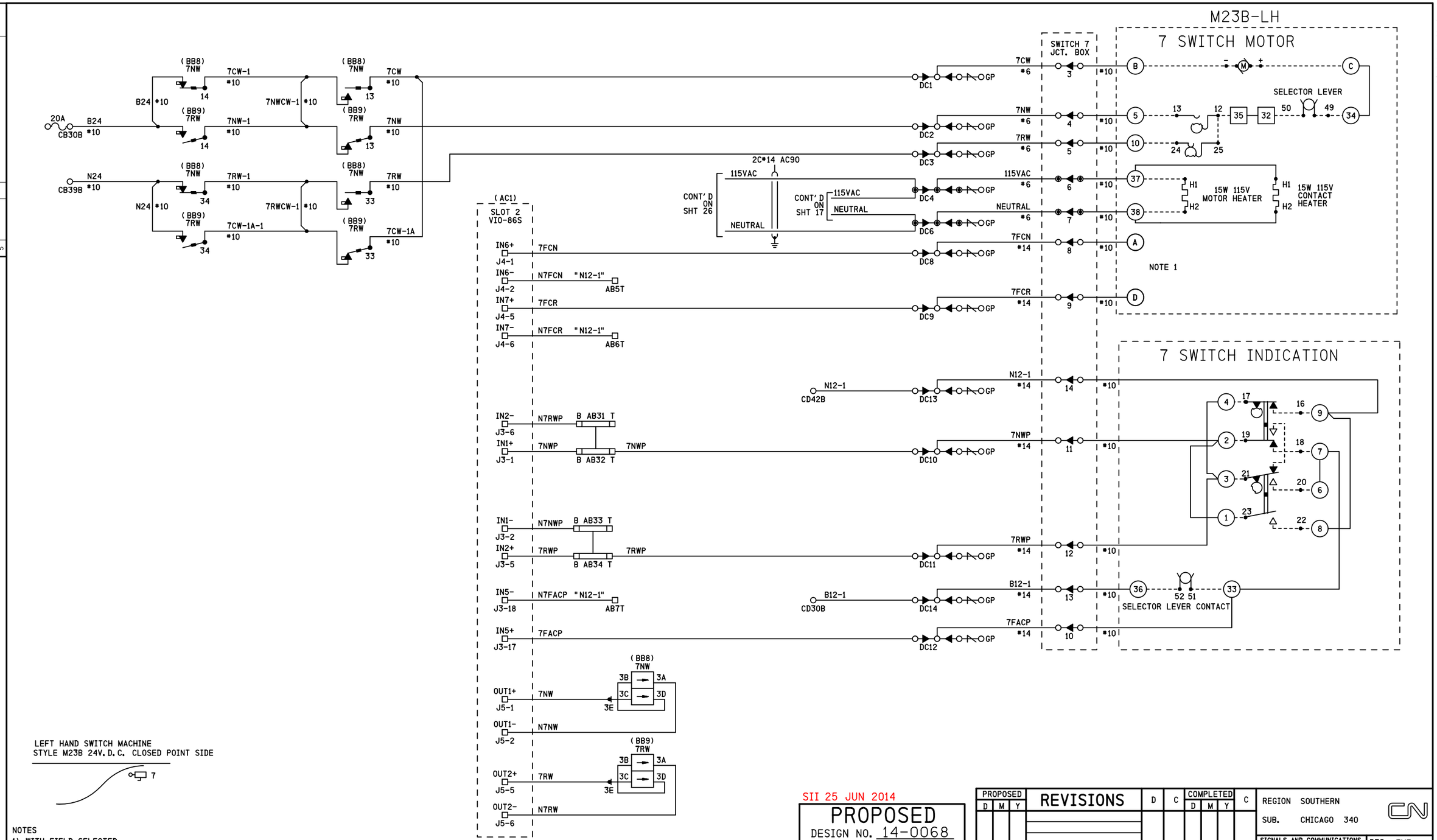

LEFT HAND SWITCH MACHINE
STYLE M23B 24V.D.C. CLOSED POINT SIDE

NOTES

1) WITH FIELD SELECTED
   - JUMPER TERMINALS D & 36 TO REVERSE SWITCH
   - JUMPER TERMINALS 36 & A TO NORMAL SWITCH
2) CIRCUITS TO BE #16 AWG UNLESS OTHERWISE NOTED
3) GP INDICATES GROUND PLANE
4) CHECK INDICATION CAMS AND REVERSE IF REQUIRED FOR PROPER NORMAL AND REVERSE INDICATIONS WITH RH AND LH POINTS IN CLOSED POSITION

DENOTES MAGNETIC BLOW OUT TYPE CONTACTS

" " -DENOTES REFERENCE, NOT WIRE TAG

◉ -DENOTES INSULATED NUT

GP L C R -DENOTES THRU TERMINAL

SII 25 JUN 2014

PROPOSED
DESIGN NO. 14-0068
RED-IN YELLOW-OUT

AS INSTALLED
DATE _____
BY _____
(PRINT NAME)

PROPOSED D	M	Y	REVISIONS	D	C	COMPLETED D	M	Y	C

REGION SOUTHERN
SUB. CHICAGO 340

SIGNALS AND COMMUNICATIONS HOMEWOOD
25 JUNE 2014
DES. TMF
CH. MRB

7 SWITCH
CONTROL & INDICATION CIRCUITS
GILMAN, IL
DENT STREET

CHI-081.24-16

DOT# 288 989V

chi-081.24-16.dgn
16-JUN-2015

NO.	DATE	BY	DESCRIPTION	APP. BY
1				
2				
3				
4				
5				

REVISIONS

SIEMENS INDUSTRY INC

DES. : TMF	DATE: 25/06/14	JOB NO. : WCNA10382	
CKD. : MRB	ISSUE DATE: N/A	EST. NO. : XP-7259	
DRN. : TMF	PLAN NO. : N/A	SHEET 16 OF 34	
P TIME: 11:25	P DATE: 16-JUN-2015	CAD ID. : CHI-081.24-16	

SIEMENS INDUSTRY INC
LOUISVILLE DIVISION, LOUISVILLE, KY

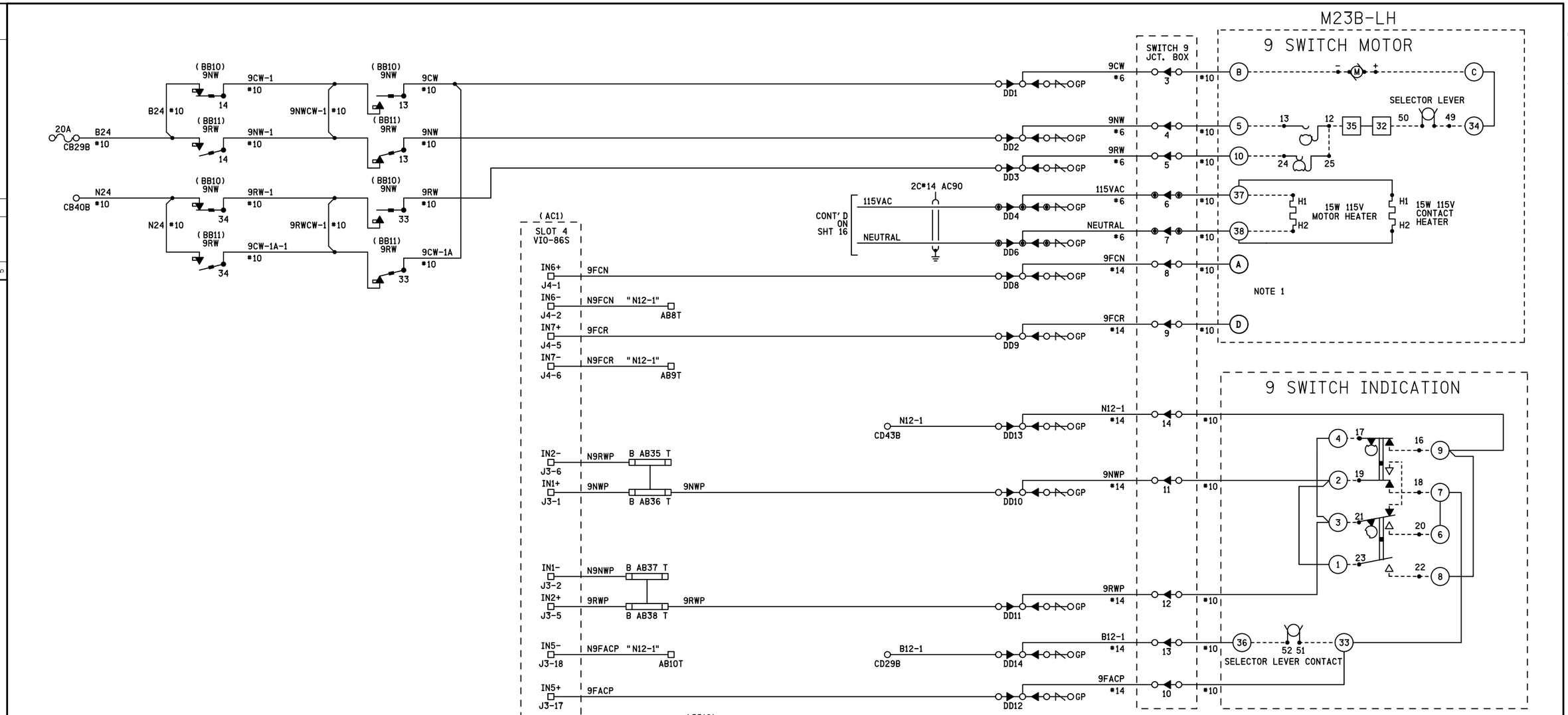

9

LEFT HAND SWITCH MACHINE
STYLE M23B 24V.D.C. CLOSED POINT SIDE

NOTES

1) WITH FIELD SELECTED
   - JUMPER TERMINALS D & 36 TO REVERSE SWITCH
   - JUMPER TERMINALS 36 & A TO NORMAL SWITCH

2) CIRCUITS TO BE #16 AWG UNLESS OTHERWISE NOTED

3) GP INDICATES GROUND PLANE

4) CHECK INDICATION CAMS AND REVERSE IF REQUIRED FOR PROPER NORMAL AND REVERSE INDICATIONS WITH RH AND LH POINTS IN CLOSED POSITION

DENOTES MAGNETIC BLOW OUT TYPE CONTACTS

" " -DENOTES REFERENCE, NOT WIRE TAG

-DENOTES INSULATED NUT

GP L C R -DENOTES THRU TERMINAL

REVISIONS			
NO.	DATE	BY	DESCRIPTION	APP. BY
1				
2				
3				
4				
5				

SIEMENS INDUSTRY INC

DES.: TMF	DATE: 25/06/14	JOB NO.: WCNA10382	
CKD.: MRB	ISSUE DATE: N/A	EST. NO.: XP-7259	
DRN.: TMF	PLAN NO.: N/A	SHEET 17 OF 34	
P TIME: 11:25	P DATE: 16-JUN-2015	CAD ID.: CHI-081.24-17	

SII 25 JUN 2014

PROPOSED
DESIGN NO. 14-0068
RED-IN YELLOW-OUT

AS INSTALLED
DATE
BY
(PRINT NAME)

PROPOSED			REVISIONS	D	C	COMPLETED			C
D	M	Y				D	M	Y	

REGION SOUTHERN
SUB. CHICAGO 340

SIGNALS AND COMMUNICATIONS HOMEWOOD
25 JUNE 2014
DES. TMF
CH. MRB

9 SWITCH
CONTROL & INDICATION CIRCUITS
GILMAN, IL
DENT STREET

CHI-081.24-17

DOT# 288 989V

SIEMENS INDUSTRY INC
LOUISVILLE DIVISION, LOUISVILLE, KY

chl-081.24-17.dgn
16-JUN-2015

REVISIONS			
NO.	DATE	BY	DESCRIPTION	APP. BY
1				
2				
3				
4				
5				

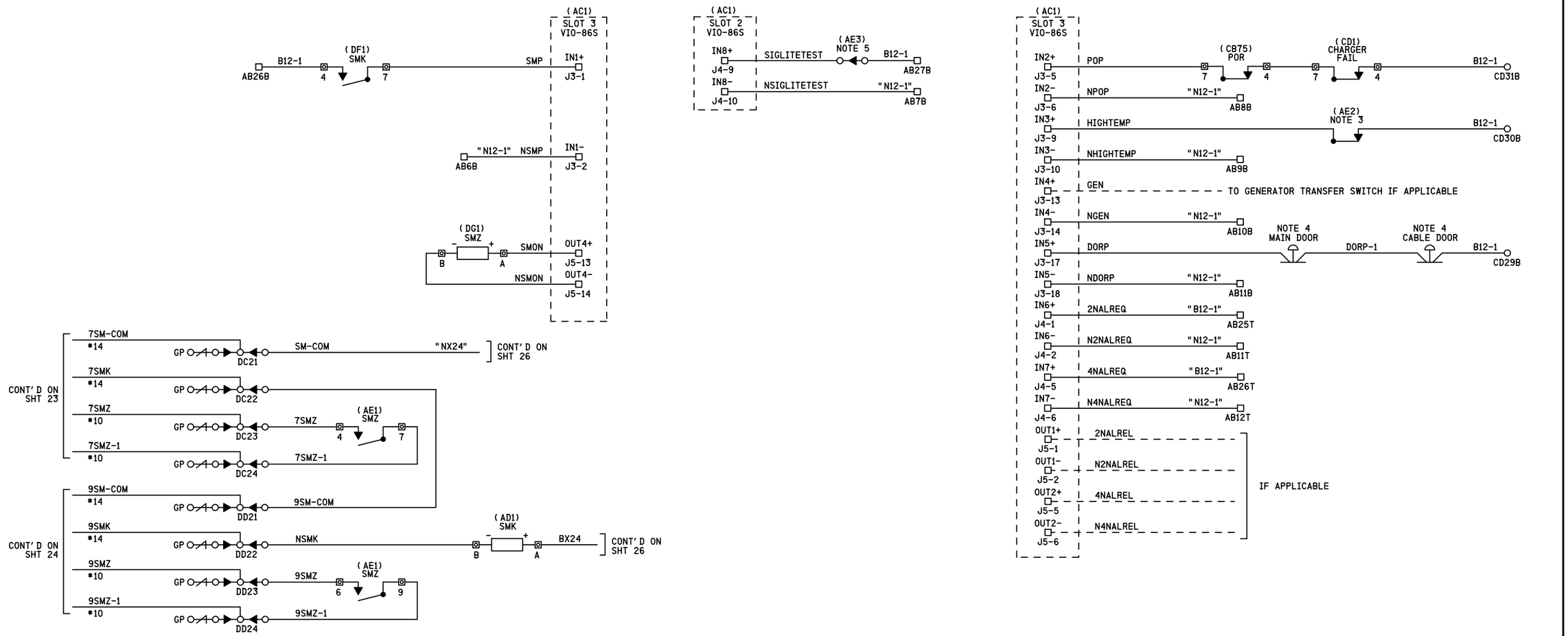

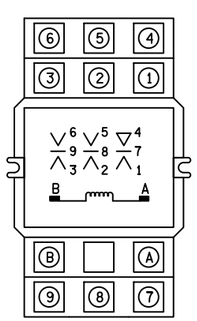

SMK
NV RELAY DETAIL
RELAY - POTTER & BRUMFIELD
MODEL KUP-14A15-24 SOCKET MOUNTABLE
24 VAC W/ 3 FORM C CONTACTS.
SOCKET - SCREW TERMINAL
MODEL 27E121
HOLD DOWN SPRING
MODEL 20C314

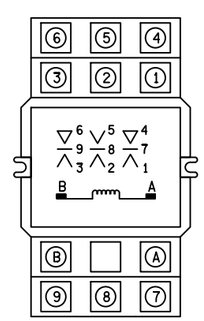

SMZ
NV RELAY DETAIL
RELAY - POTTER & BRUMFIELD
MODEL KUP-14D15-12 SOCKET MOUNTABLE
12 VDC W/ 3 FORM C CONTACTS.
SOCKET - SCREW TERMINAL
MODEL 27E121
HOLD DOWN SPRING
MODEL 20C314

NOTES
1) CIRCUITS TO BE #16 AWG UNLESS OTHERWISE NOTED
2) GP INDICATES GROUND PLANE
3) THERMOSTAT, NEWARK MODEL 51M8653
4) BUNGALOW DOOR DETECTORS
CONTACT OPENS WHEN DOOR OPENS
5) CLOSE TEST LINK TO LIGHT SIGNALS
" " -DENOTES REFERENCE, NOT WIRE TAG
GP L C R DENOTES THRU TERMINAL

SIEMENS INDUSTRY INC
LOUISVILLE DIVISION, LOUISVILLE, KY

SIEMENS INDUSTRY INC			
DES. : TMF	DATE: 25/06/14	JOB NO. : WCNA10382	
CKD. : MRB	ISSUE DATE: N/A	EST. NO. :XP-7259	
DRN. : TMF	PLAN NO. :N/A	SHEET 18 OF 34	
P TIME:11:25	P DATE: 16-JUN-2015	CAD ID. : CHI-081.24-18	

SII 25 JUN 2014

PROPOSED
DESIGN NO. 14-0068
RED-IN YELLOW-OUT

AS INSTALLED
DATE
BY
(PRINT NAME)

PROPOSED			REVISIONS	D	C	COMPLETED			C
D	M	Y				D	M	Y	

REGION SOUTHERN
SUB. CHICAGO 340
SIGNALS AND COMMUNICATIONS HOMEWOOD
25 JUNE 2014
DES. TMF
CH. MRB
MISC. & SCD CIRCUITS
GILMAN, IL
DENT STREET
CHI-081.24-18

DOT# 288 989V

chi-081.24-18.dgn
16-JUN-2015

REVISIONS			
NO.	DATE	BY	DESCRIPTION	APP. BY
1				
2				
3				
4				
5				

B N

(AC1)

SLOT 1	SLOT 2	SLOT 3	SLOT 4	SLOT 5	SLOT 6	SLOT 7	SLOT 8	SLOT 9
VTI-2S	VIO-86S	VIO-86S	VIO-86S	EMPTY	VLD-R16S	EMPTY	EMPTY	EMPTY
TRACK 1 OUT	VITAL IN 1	VITAL IN 1	VITAL IN 1		BANK 1			
TRACK 1 IN	VITAL IN 2	VITAL IN 2	VITAL IN 2		VSSR 1			
	VITAL IN 3	VITAL IN 3	VITAL IN 3		LAMP 1			
TRACK 2 OUT	VITAL IN 4	VITAL IN 4	VITAL IN 4		LAMP 2			
TRACK 2 IN	VITAL IN 5	VITAL IN 5	VITAL IN 5		LAMP 3			
	VITAL IN 6	VITAL IN 6	VITAL IN 6		LAMP 4			
CAB 1 OUT	VITAL IN 7	VITAL IN 7	VITAL IN 7		LAMP 5			
CAB 2 OUT	VITAL IN 8	VITAL IN 8	VITAL IN 8		LAMP 6			
	BANK 1	BANK 1	BANK 1		LAMP 7			
VITAL IN 1	VITAL OUT 1	VITAL OUT 1	VITAL OUT 1		LAMP 8			
VITAL IN 2	VITAL OUT 2	VITAL OUT 2	VITAL OUT 2		BANK 2			
	VITAL OUT 3	VITAL OUT 3	VITAL OUT 3		VSSR 2			
	BANK 2	BANK 2	BANK 2		LAMP 9			
	VITAL OUT 4	VITAL OUT 4	VITAL OUT 4		LAMP 10			
	VITAL OUT 5	VITAL OUT 5	VITAL OUT 5		LAMP 11			
	VITAL OUT 6	VITAL OUT 6	VITAL OUT 6		LAMP 12			
					LAMP 13			
					LAMP 14			
					LAMP 15			
					LAMP 16			
HEALTH	BANK 1 HEALTH	BANK 1 HEALTH	BANK 1 HEALTH		BANK 1 HEALTH			
	BANK 2 HEALTH	BANK 2 HEALTH	BANK 2 HEALTH		BANK 2 HEALTH			
	HEALTH	HEALTH	HEALTH		HEALTH			

CPS-3	VPM-3	SLOT 1 GFD-1	SLOT 2 EMPTY	SLOT 3 EMPTY
BACK PLANE CONTROL DISPLAY UNIT WILL MOUNT IN FRONT OF THE CPS-3 & VPM-3	CPU STATUS A B C PROG ENET 1 ENET 2 CDU USB	B1+ B1- B2+ B2- B3+ B3- 1 B2 2 B2 3 — 4 B3 5 B3 6 — 7 GND		

CHASSIS ID DIP PACK
UCI-3

NOTES

CDU-1 = CONTROL DISPLAY UNIT
CPS-3 = CENTRAL POWER SUPPLY
VPM-3 = VITAL PERIPHERAL MASTER MODULE
GFD-1 = GROUND FAULT DETECTOR MODULE
CIO-2A = COMMUNICATION INPUT/OUTPUT MODULE
CIO-1A = COMMUNICATION INPUT/OUTPUT MODULE
UCI-3 = CHASSIS INFORMATION MODULE
VTI-2S = VITAL TRACK INTERFACE
VLD-R16S = VITAL LAMP DRIVER MODULE
VIO-86S = VITAL 8 IN / 6 OUT

ELECTROLOGIXS COMMUNICATION NOTES:

SERIAL PORT 1 (VPM-2+ & VPM-3)
- -GENISYS
- -SCS-128
- -LCP (MUST USE EXTERNAL CURRENT LOOP ADAPTER P/N 203051-000 FOR GENERIC/CUSTOM LCP UNITS OR CIO-2A TO SOFTWARE PANEL)
- -UCE

SERIAL PORT 2 & 3 (VPM-2+ & VPM-3)
- -ATCS (MUST USE CIO-MDA TO RADIO)
- -LCP (MUST USE EXTERNAL CURRENT LOOP ADAPTER P/N 203051-000 FOR GENERIC/CUSTOM LCP UNITS OR CIO-2A TO SOFTWARE PANEL)
- -HAWK
- -REMOTE (RP2000)

ETHERNET (IP-BASED PROTOCOLS VPM-3 ONLY)
GENISYS
REMOTE (RP2000)

SII 25 JUN 2014

PROPOSED
DESIGN NO. 14-0068
RED-IN YELLOW-OUT

AS INSTALLED
DATE _____
BY _____
(PRINT NAME)

PROPOSED			REVISIONS	D	C	COMPLETED			C
D	M	Y				D	M	Y	

REGION SOUTHERN
SUB. CHICAGO 340

SIGNALS AND COMMUNICATIONS HOMEWOOD
25 JUNE 2014
DES. TMF
CH. MRB

IXS VLC HARDWARE CONFIG.

GILMAN, IL
DENT STREET

CHI-081.24-19

DOT# 288 989V

SIEMENS INDUSTRY INC

DES. : TMF	DATE: 25/06/14	JOB NO. : WCNA10382	
CKD. : MRB	ISSUE DATE: N/A	EST. NO. :XP-7259	
DRN. : TMF	PLAN NO. :N/A	SHEET 19 OF 34	
P TIME:11:26	P DATE: 16-JUN-2015	CAD ID. : CHI-081.24-19	

SIEMENS INDUSTRY INC
LOUISVILLE DIVISION, LOUISVILLE, KY

chi-081.24-19.dgn
16-JUN-2015

REVISIONS				
NO.	DATE	BY	DESCRIPTION	APP. BY
1				
2				
3				
4				
5				

VTI-2S PERSONALITY MODULE (SLOT 1)

TK 1+	2NATB	X	1
TK 1-	2NATN	X	2
			3
TK 2+	4NATB	X	4
TK 2-	4NATN	X	5

J3

CAB1+			1
CAB1-			2
			3
CAB2+			4
CAB2-			5
			6
IN 1+	2NAAUX	X	7
IN 1-	N2NAAUX	X	8
			9
IN 2+	8138NWP	X	10
IN 2-	N8138NWP	X	11

J4

VIO-86S PERSONALITY MODULE (SLOT 2)

AUX			
IN 1+	7NWP	X	1
IN 1-	N7NWP	X	2
IN 2+	7RWP	X	5
IN 2-	N7RWP	X	6
IN 3+	7T	X	9
IN 3-	N7T	X	10
IN 4+			13
IN 4-			14
IN 5+	7FACP	X	17
IN 5-	N7FACP	X	18

J3

AUX			
IN 6+	7FCN	X	1
IN 6-	N7FCN	X	2
IN 7+	7FCR	X	5
IN 7-	N7FCR	X	6
IN 8+	SIGLITETEST	X	9
IN 8-	NSIGLITETEST	X	10
OUT 6+			17
OUT 6-			18

J4

AUX			
OUT 1+	7NW	X	1
OUT 1-	N7NW	X	2
OUT 2+	7RW	X	5
OUT 2-	N7RW	X	6
OUT 3+			9
OUT 3-			10
OUT 4+			13
OUT 4-			14
OUT 5+			17
OUT 5-			18

J5

VIO-86S PERSONALITY MODULE (SLOT 3)

AUX			
IN 1+	SMP	X	1
IN 1-	NSMP	X	2
IN 2+	POP	X	5
IN 2-	NPOP	X	6
IN 3+	HIGHTEMP	X	9
IN 3-	NHIGHTEMP	X	10
IN 4+	GEN		13
IN 4-	NGEN	X	14
IN 5+	DORP	X	17
IN 5-	NDORP	X	18

J3

AUX			
IN 6+	2NALREQ	X	1
IN 6-	N2NALREQ	X	2
IN 7+	4NALREQ	X	5
IN 7-	N4NALREQ	X	6
IN 8+			9
IN 8-			10
OUT 6+			17
OUT 6-			18

J4

AUX			
OUT 1+	2NALREL		1
OUT 1-	N2NALREL		2
OUT 2+	4NALREL		5
OUT 2-	N4NALREL		6
OUT 3+			9
OUT 3-			10
OUT 4+	SMON	X	13
OUT 4-	NSMON	X	14
OUT 5+			17
OUT 5-			18

J5

VIO-86S PERSONALITY MODULE (SLOT 4)

AUX			
IN 1+	9NWP	X	1
IN 1-	N9NWP	X	2
IN 2+	9RWP	X	5
IN 2-	N9RWP	X	6
IN 3+			9
IN 3-			10
IN 4+			13
IN 4-			14
IN 5+	9FACP	X	17
IN 5-	N9FACP	X	18

J3

AUX			
IN 6+	9FCN	X	1
IN 6-	N9FCN	X	2
IN 7+	9FCR	X	5
IN 7-	N9FCR	X	6
IN 8+			9
IN 8-			10
OUT 6+			17
OUT 6-			18

J4

AUX			
OUT 1+	9NW	X	1
OUT 1-	N9NW	X	2
OUT 2+	9RW	X	5
OUT 2-	N9RW	X	6
OUT 3+			9
OUT 3-			10
OUT 4+			13
OUT 4-			14
OUT 5+			17
OUT 5-			18

J5

EMPTY (SLOT 5)

VLD-R16S PERSONALITY MODULE (SLOT 6)

LAMP1	2NAGE	X	1
LAMP2	2NAYE	X	2
LAMP3	2NARE	X	3
LAMP4	2NBGE	X	4
LAMP5	2NBYE	X	5
LAMP6	2NBRE	X	6
LAMP7			7
LAMP8			8
N/A			9
LAMPB1	LAMP +	X	10
LAMPB1	LAMP +	X	11
LAMPN1	LAMP -	X	12
N/A			13
VSSR1+	VSTOP1	X	14
VSSR1-	NVSTOP1	X	15

J3

LAMP9	4NAGE	X	1
LAMP10	4NAYE	X	2
LAMP11	4NARE	X	3
LAMP12	4NBGE	X	4
LAMP13	4NBYE	X	5
LAMP14	4NBRE	X	6
LAMP15			7
LAMP16			8
N/A			9
LAMPB2	LAMP +	X	10
LAMPB2	LAMP +	X	11
LAMPN2	LAMP -	X	12
N/A			13
VSSR2+	VSTOP2	X	14
VSSR2-	NVSTOP2	X	15

J4

EMPTY (SLOT 7)

EMPTY (SLOT 8)

EMPTY (SLOT 9)

PERSONALITY MODULE LEGEND

TERMINAL LABEL → XXX | XXXX [X] X ← PIN NUMBER

APPLICATION DESCRIPTION

WIRE PRESENT

SII 25 JUN 2014

PROPOSED
DESIGN NO. 14-0068
RED-IN YELLOW-OUT

AS INSTALLED
DATE _____
BY _____
(PRINT NAME)

PROPOSED D	M	Y	REVISIONS	D	C	COMPLETED D	M	Y	C

REGION SOUTHERN
SUB. CHICAGO 340

SIGNALS AND COMMUNICATIONS HOMEWOOD
25 JUNE 2014
DES. TMF
CH. MRB

IXS VLC
PERSONALITY MODULE CONNECTIONS
GILMAN, IL
DENT STREET

CHI-081.24-20

DOT# 288 989V

SIEMENS INDUSTRY INC

DES.: TMF	DATE: 25/06/14	JOB NO.: WCNA10382	
CKD.: MRB	ISSUE DATE: N/A	EST. NO.: XP-7259	
DRN.: TMF	PLAN NO.: N/A	SHEET 20 OF 34	
P TIME: 11:26	P DATE: 16-JUN-2015	CAD ID.: CHI-081.24-20	

SIEMENS INDUSTRY INC
LOUISVILLE DIVISION, LOUISVILLE, KY

chi-081.24-20.dgn
16-JUN-2015

REVISIONS			
NO.	DATE	BY	DESCRIPTION	APP. BY
1				
2				
3				
4				
5				

APPLICATION SOFTWARE INFORMATION

CHI-081.24-IXS.MB1	CHECKSUM: / CRC:
REV.	
CHI-081.24-IXSV.B1	CHECKSUM: / CRC:
CHI-081.24-IXSNV.B1	CHECKSUM: / CRC:
YEAR COMPILED	2015
MONTH COMPILED	
CHASSIS ID	158

CHASSIS ID DIP SHUNTS
LOCATED ON BACKPLANE
UNDERNEATH UCI-3 MODULE

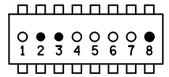

● = TAB PUNCHED OUT (BROKEN)
○ = TAB INTACT (MADE)
LEAVE TAB INTACT TO OBTAIN ID NUMBER

APPLICATION ID DIP SHUNTS
LOCATED INSIDE UCI-3 MODULE
UNDERNEATH EPROM

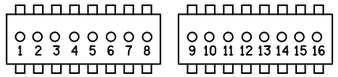

● = TAB PUNCHED OUT (BROKEN)
○ = TAB INTACT (MADE)
LEAVE TAB INTACT TO OBTAIN ID NUMBER

PROGRAM ED SHEET: = CHI-081.24-IXS.PDF

TYPICAL INSTALLATION OF
EPROM & DIP SHUNT

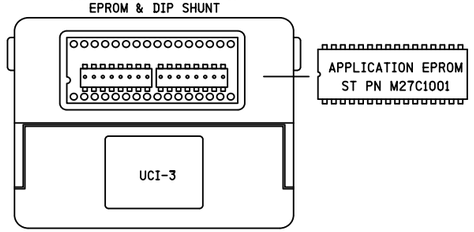

VPM3 ETHERNET SETUP	
PORT 1 (TOP) IP ADDRESS	192.168.0.11
SUBNET MASK	255.255.255.0
PORT 2 (BOTTOM) IP ADDRESS	192.168.1.158
SUBNET MASK	255.255.255.0
DEFAULT GATEWAY	0.0.0.0

EXECUTIVE INFORMATION		
VPM-3	VERSION	CRC
VPM-A PROCESSOR	6.16	9AF7B238
VPM-B PROCESSOR	6.16	E978A4F3
VPM-C PROCESSOR	6.16	80F612A4

SIII 25 JUN 2014

PROPOSED
DESIGN NO. 14-0068
RED-IN YELLOW-OUT

AS INSTALLED
DATE _____
BY _____
(PRINT NAME)

PROPOSED			REVISIONS	D	C	COMPLETED			C
D	M	Y				D	M	Y	

REGION SOUTHERN
SUB. CHICAGO 340

SIGNALS AND COMMUNICATIONS HOMEWOOD
25 JUNE 2014
DES. TMF
CH. MRB

IXS VLC CHASSIS ID & VITAL CONFIGURATION SETTINGS
GILMAN, IL
DENT STREET

CHI-081.24-21

DOT# 288 989V

SIEMENS INDUSTRY INC

DES.: TMF	DATE: 25/06/14
CKD.: MRB	ISSUE DATE: N/A
DRN.: TMF	PLAN NO.: N/A
P. TIME: 11:26	P. DATE: 16-JUN-2015
JOB NO.: WCNA10382	
EST. NO.: XP-7259	
SHEET 21 OF 34	
CAD ID.: CHI-081.24-21	

SIEMENS INDUSTRY INC
LOUISVILLE DIVISION, LOUISVILLE, KY

chi-081.24-21.dgn
16-JUN-2015

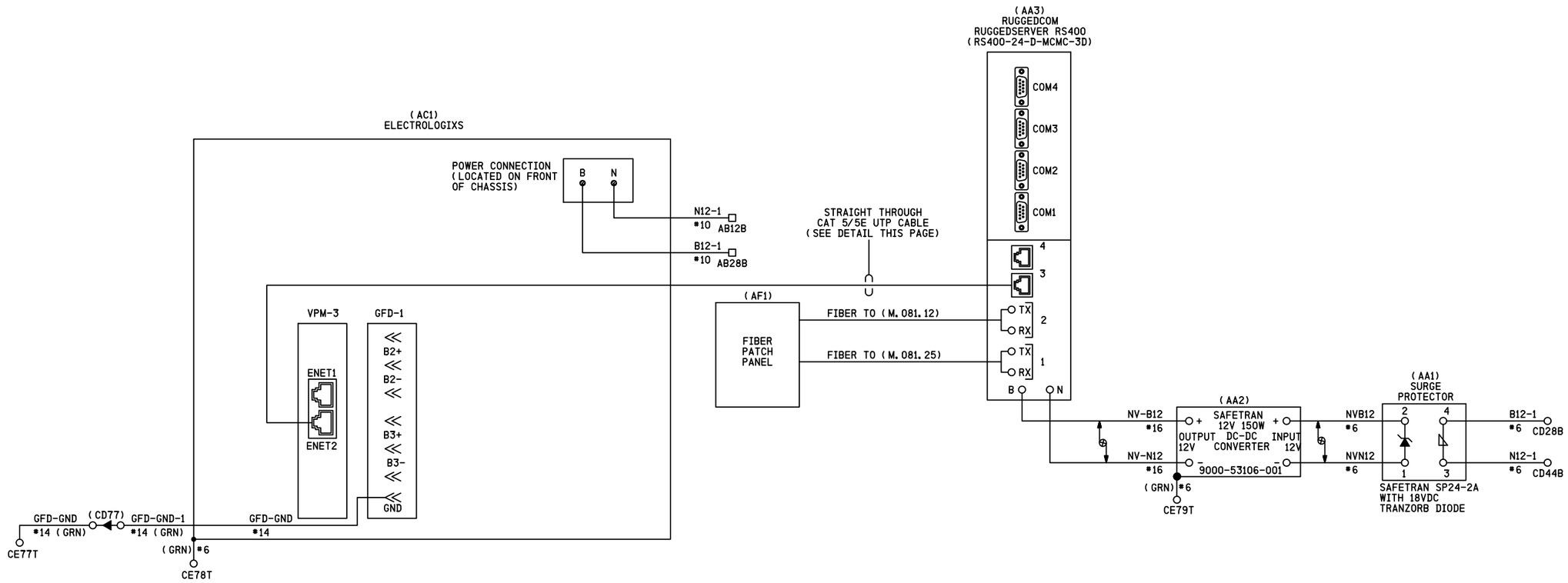

NOTES

- DENOTES TWISTED PAIR

EIA/TIA 568B WIRING STANDARD
(STRAIGHT THROUGH CABLE)

PIN	COLOR	DESCRIPTION
1	WHITE/ORANGE	RCDATA +
2	ORANGE	RCDATA −
3	WHITE/GREEN	TXDATA +
4	BLUE	UNUSED
5	WHITE/BLUE	UNUSED
6	GREEN	TXDATA −
7	WHITE/BROWN	UNUSED
8	BROWN	UNUSED

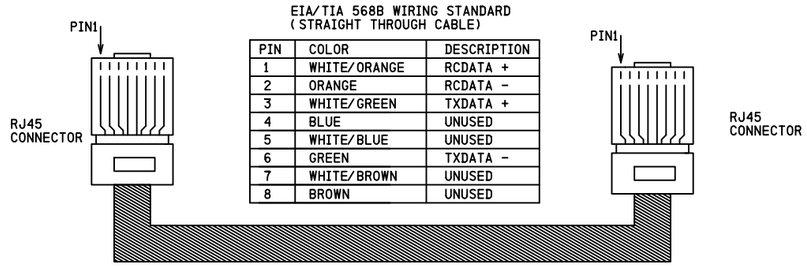

CAT 5/5E UTP CABLE DETAIL

REVISIONS			
NO.	DATE	BY	DESCRIPTION	APP. BY
1				
2				
3				
4				
5				

SIEMENS INDUSTRY INC

DES.: TMF	DATE: 25/06/14	JOB NO.: WCNA10382	
CKD.: MRB	ISSUE DATE: N/A	EST. NO.: XP-7259	
DRN.: TMF	PLAN NO.: N/A	SHEET 22 OF 34	
P TIME: 11:26	P DATE: 16-JUN-2015	CAD ID.: CHI-081.24-22	

SIEMENS INDUSTRY INC
LOUISVILLE DIVISION, LOUISVILLE, KY

chi-081.24-22.dgn
16-JUN-2015

SII 25 JUN 2014

PROPOSED
DESIGN NO. 14-0068
RED-IN YELLOW-OUT

AS INSTALLED
DATE _____
BY _____
(PRINT NAME)

PROPOSED			REVISIONS	D	C	COMPLETED			C
D	M	Y				D	M	Y	

REGION SOUTHERN
SUB. CHICAGO 340

SIGNALS AND COMMUNICATIONS
HOMEWOOD
25 JUNE 2014

DES. TMF
CH. MRB

IXS VLC
COMMUNICATION CIRCUITS
GILMAN, IL
DENT STREET

CHI-081.24-22

DOT# 288 989V