chl-081.24-0.dgn
16-JUN-2015

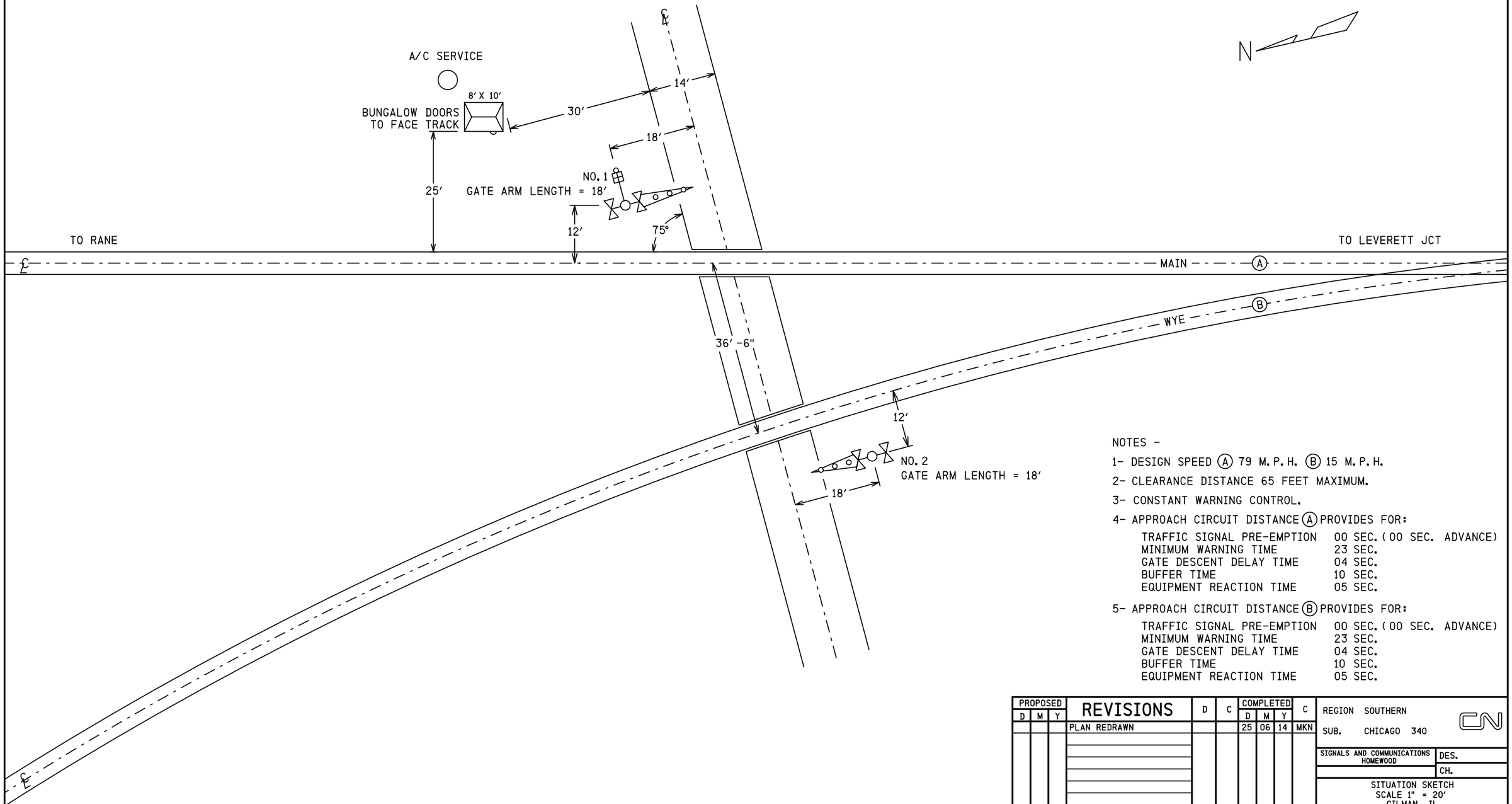


NOTES -

1- DESIGN SPEED (A) 79 M.P.H. (B) 15 M.P.H.

2- CLEARANCE DISTANCE 65 FEET MAXIMUM.

3- CONSTANT WARNING CONTROL.

4- APPROACH CIRCUIT DISTANCE (A) PROVIDES FOR:

| | |
|---|---|
| TRAFFIC SIGNAL PRE-EMPTION | 00 SEC. (00 SEC. ADVANCE) |
| MINIMUM WARNING TIME | 23 SEC. |
| GATE DESCENT DELAY TIME | 04 SEC. |
| BUFFER TIME | 10 SEC. |
| EQUIPMENT REACTION TIME | 05 SEC. |

5- APPROACH CIRCUIT DISTANCE (B) PROVIDES FOR:

| | |
|---|---|
| TRAFFIC SIGNAL PRE-EMPTION | 00 SEC. (00 SEC. ADVANCE) |
| MINIMUM WARNING TIME | 23 SEC. |
| GATE DESCENT DELAY TIME | 04 SEC. |
| BUFFER TIME | 10 SEC. |
| EQUIPMENT REACTION TIME | 05 SEC. |

| PROPOSED D | PROPOSED M | PROPOSED Y | REVISIONS | D | C | COMPLETED D | COMPLETED M | COMPLETED Y | C |
|---|---|---|---|---|---|---|---|---|---|
| | | | PLAN REDRAWN | | | 25 | 06 | 14 | MKN |

REGION SOUTHERN
SUB. CHICAGO 340

SIGNALS AND COMMUNICATIONS HOMEWOOD

DES.
CH.

SITUATION SKETCH
SCALE 1" = 20'
GILMAN, IL

DENT STREET

CHI-081.24-0

DOT# 288 989V

34

SIEMENS INDUSTRY INC
LOUISVILLE DIVISION, LOUISVILLE, KY

| REVISIONS | | | | |
|---|---|---|---|---|
| NO. | DATE | BY | DESCRIPTION | APP. BY |
| 1 | | | | |
| 2 | | | | |
| 3 | | | | |
| 4 | | | | |
| 5 | | | | |

SERVICE

| | |
|---|---|
| 3C*6 TECK90 | TO SERVICE C1 |
| 3C*6 TECK90 | TO SCD 7 C1A |
| 3C*6 TECK90 | TO SCD 9 C1B |

BUNGALOW

| | | | |
|---|---|---|---|
| C2 | TO 1T | 2SC*6TW | TO 1R C3 |
| C4 | TO 2T | 2SC*6TW | TO 2R C5 |
| C23 | TO SIG NO.1 | 16C(7*6,9*14) | TO 3T C6 |
| C33 | TO M.081.00 | 8C(2*10,6*14) | TO 3C C7 |
| C34 | TO M.081.00 | 8C(2*10,6*14) | TO 3R C8 |
| TO MAIN HOUSE M.081.12 | | FIBER | TO 4T C9 |
| TO REMOTE 4 M.081.25 | | FIBER | TO 4C C10 |
| | | 2SC*6TW | TO 4R C11 |
| | | 2SC*6TW | TO 5T C12 |
| | | 2SC*6TW | TO 5C C13 |
| | | 2SC*6TW | TO 5R C14 |
| | | 2SC*6TW | 11ATB C15 |
| | | 2SC*6TW | 7ATB C16 |
| | | 2SC*6TW | 7TR C17 |
| | | 2SC*6TW | 7ATR C18 |
| | | 2SC*6TW | 2NAT C19 |
| | | 2SC*6TW | 2NAT C20 |
| | | 2SC*6TW | 4NAT C21 |
| | | 2SC*6TW | 4NAT C22 |
| | | 16C(7*6,9*14) | TO SIG NO.2 C24 |
| | | 7C*6 | TO SIG.2NA C25 |
| | | 7C*6 | TO SIG.2NB C26 |
| | | 7C*6 | TO SIG.4NA C27 |
| | | 7C*6 | TO SIG.4NB C28 |
| | | 16C(7*6,9*14) | TO SWITCH 7 C29 |
| | | 16C(7*6,9*14) | TO SWITCH 9 C30 |
| | | 8C(2*10,6*14) | TO SCD 7 C31 |
| | | 8C(2*10,6*14) | TO SCD 9 C32 |
| | | 8C(2*10,6*14) | TO SW M.81.38 C35 |

FLASHING LIGHT UNITS ALIGNMENT TABLE

| PRIMARY FRONT LIGHTS FOR VEHICLES | | | | | | | |
|---|---|---|---|---|---|---|---|
| SIG # | LIGHT # | ROUNDEL | | ROAD SPEED | MINIMUM DISTANCE | RECOMMENDED DISTANCE | ALIGNMENT DISTANCE |
| | | SIZE | TYPE | MPH | FT | FT | FT |
| 1 | 1,2 | 12" | LED | 30 | 270 | 450 | |
| 2 | 7,8 | 12" | LED | 30 | 270 | 450 | |
| BACK LIGHTS FOR VEHICLES | | | | | | | |
| SIG # | LIGHT # | ROUNDEL | | ROAD SPEED | MINIMUM DISTANCE | RECOMMENDED DISTANCE | ALIGNMENT DISTANCE |
| | | SIZE | TYPE | MPH | FT | FT | FT |
| 1 | 3,4 | 12" | LED | N/A | N/A | N/A | 50 |
| 2 | 5,6 | 12" | LED | N/A | N/A | N/A | 50 |

NOTE
FIELD IS TO PROVIDE THE ACTUAL ALIGNMENT DISTANCE AS DETERMINED BY
SCP-706: ROAD CROSSING DEVICE LIGHT UNIT ALIGNMENT PROCEDURES


| CONTENT | SHEET NO. |
|---|---|
| SITUATION SKETCH | 0 |
| TRACK LAYOUT & INDEX | 01 |
| GCP 4000 CHASSIS & MODULE LAYOUT | 02 |
| GCP 4000 PROGRAM INFORMATION | 03 |
| GCP 4000 PROGRAM INFORMATION | 04 |
| GCP 4000/SEAR III SETUP & PROGRAM | 05 |
| GCP 4000 CALIBRATION HISTORY | 06 |
| GCP 4000 TRACK 1,2 & 3 MODULE CONNECTIONS | 07 |
| GCP 4000 TRACK 4,5 & 6 MODULE CONNECTIONS | 08 |
| GCP 4000 CPUII+ & VHF COMMUNICATOR | 09 |
| GCP 4000 SEAR III WITH GFT & CRTU | 10 |
| GCP 4000/SSCCIIII GATE CONTROLLERS W/ ILODS | 11 |
| GATE 1&2 MECH. CONTROL CIRCUITS SAFETRAN S-60 | 12 |
| TRACK CIRCUITS | 13 |
| 2N SIG CONTROL CIRCUITS | 14 |
| 4N SIG CONTROL CIRCUITS | 15 |
| 7 SWITCH CONTROL & INDICATION CIRCUITS | 16 |
| 9 SWITCH CONTROL & INDICATION CIRCUITS | 17 |
| MISC. & SCD CIRCUITS | 18 |
| IXS VLC HARDWARE CONFIG. | 19 |
| IXS VLC PERSONALITY MODULE CONNECTIONS | 20 |
| IXS VLC CHASSIS ID & VITAL CONFIGURATION SETTINGS | 21 |
| IXS VLC COMMUNICATION CIRCUITS | 22 |
| 7 SCD CONTROL & INDICATION CIRCUITS | 23 |
| 9 SCD CONTROL & INDICATION CIRCUITS | 24 |
| DC DISTRIBUTION | 25 |
| AC DISTRIBUTION | 26 |
| BUNGALOW LAYOUT TOP VIEW & WAGO DETAIL | 27 |
| ENTRANCE BOARD L.I.G.P. INSIDE | 28 |
| ENTRANCE BOARD L.I.G.P. INSIDE | 29 |
| ENTRANCE BOARD L.I.G.P. OUTSIDE | 30 |
| ENTRANCE BOARD L.I.G.P. OUTSIDE | 31 |
| BUNGALOW LAYOUT SIDES A & B | 32 |
| BUNGALOW LAYOUT SIDES C & D | 33 |


chi-081.24-01.dgn
16-JUN-2015

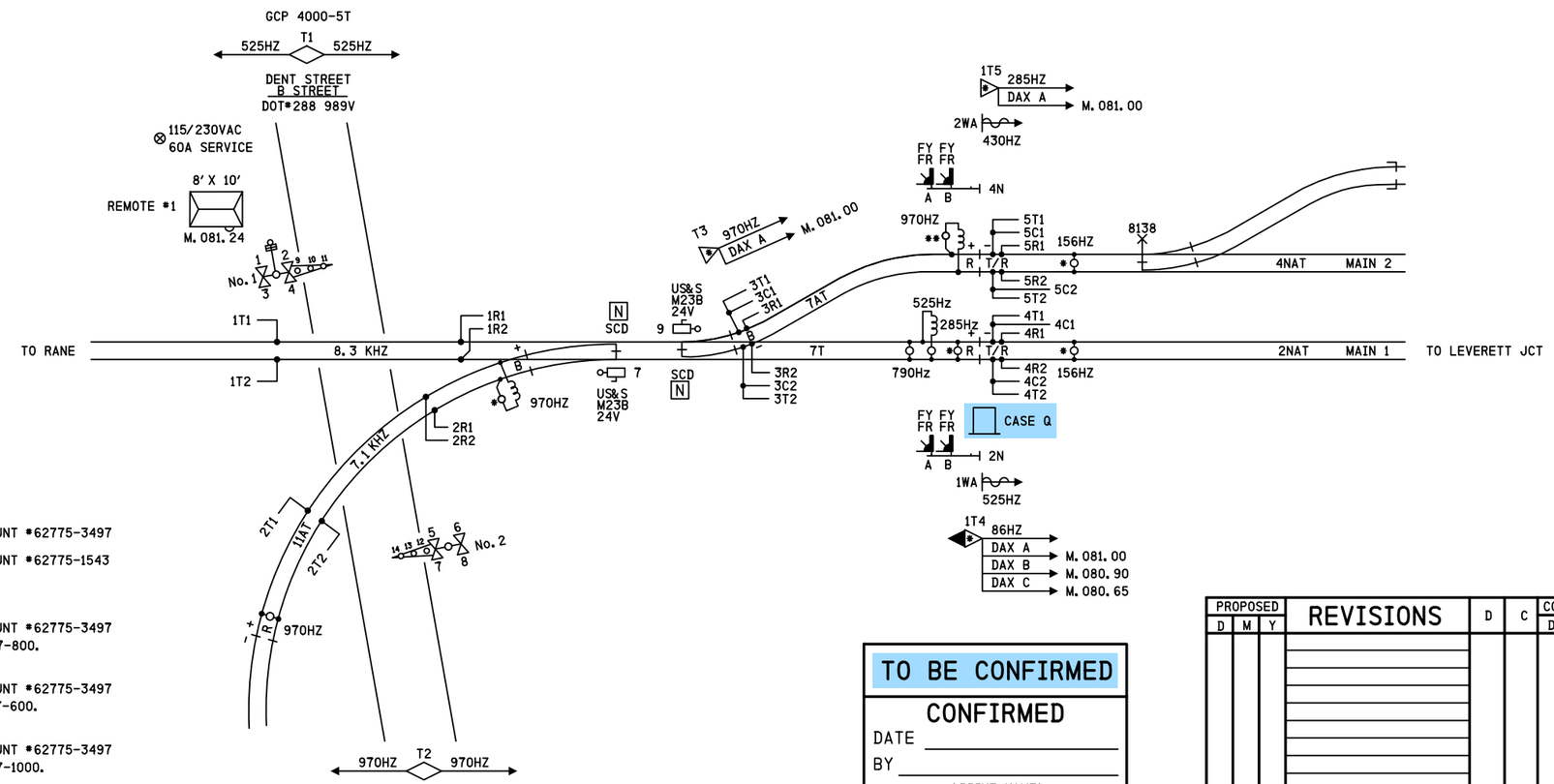


NOTE

- DENOTES MULTI-FREQ. NARROW BAND SHUNT *62775-3497
- * DENOTES MULTI-FREQ. NARROW BAND SHUNT *62775-1543
- DENOTES 6 WIRE TRACK CONNECTIONS.
- DENOTES MULTI-FREQ. NARROW BAND SHUNT *62775-3497 WITH SIMULATED TRACK INDUCTOR 8V617-800.
- * DENOTES MULTI-FREQ. NARROW BAND SHUNT *62775-3497 WITH SIMULATED TRACK INDUCTOR 8V617-600.
- ** DENOTES MULTI-FREQ. NARROW BAND SHUNT *62775-3497 WITH SIMULATED TRACK INDUCTOR 8V617-1000.

TO BE CONFIRMED

CONFIRMED
DATE _____
BY _____
(PRINT NAME)

SII 25 JUN 2014

PROPOSED
DESIGN NO. 14-0068
RED-IN YELLOW-OUT

AS INSTALLED
DATE _____
BY _____
(PRINT NAME)

| PROPOSED | | | REVISIONS | D | C | COMPLETED | | | C |
|---|---|---|---|---|---|---|---|---|---|
| D | M | Y | | | | D | M | Y | |

REGION SOUTHERN
SUB. CHICAGO 340

SIGNALS AND COMMUNICATIONS HOMEWOOD
25 JUNE 2014
DES. TMF
CH. MRB
TRACK LAYOUT & INDEX
GILMAN, IL
DENT STREET
CHI-081.24-01
DOT# 288 989V

| SIEMENS INDUSTRY INC | | | |
|---|---|---|---|
| DES.: TMF | DATE: 25/06/14 | JOB NO.: WCNA10382 | |
| CKD.: MRB | ISSUE DATE: N/A | EST. NO.: XP-7259 | |
| DRN.: TMF | PLAN NO.: N/A | SHEET 1 OF 34 | |
| P TIME: 11:23 | P DATE: 16-JUN-2015 | CAD ID.: CHI-081.24-01 | |

SIEMENS INDUSTRY INC
LOUISVILLE DIVISION, LOUISVILLE, KY

| REVISIONS | | | | |
|---|---|---|---|---|
| NO. | DATE | BY | DESCRIPTION | APP. BY |
| 1 | | | | |
| 2 | | | | |
| 3 | | | | |
| 4 | | | | |
| 5 | | | | |

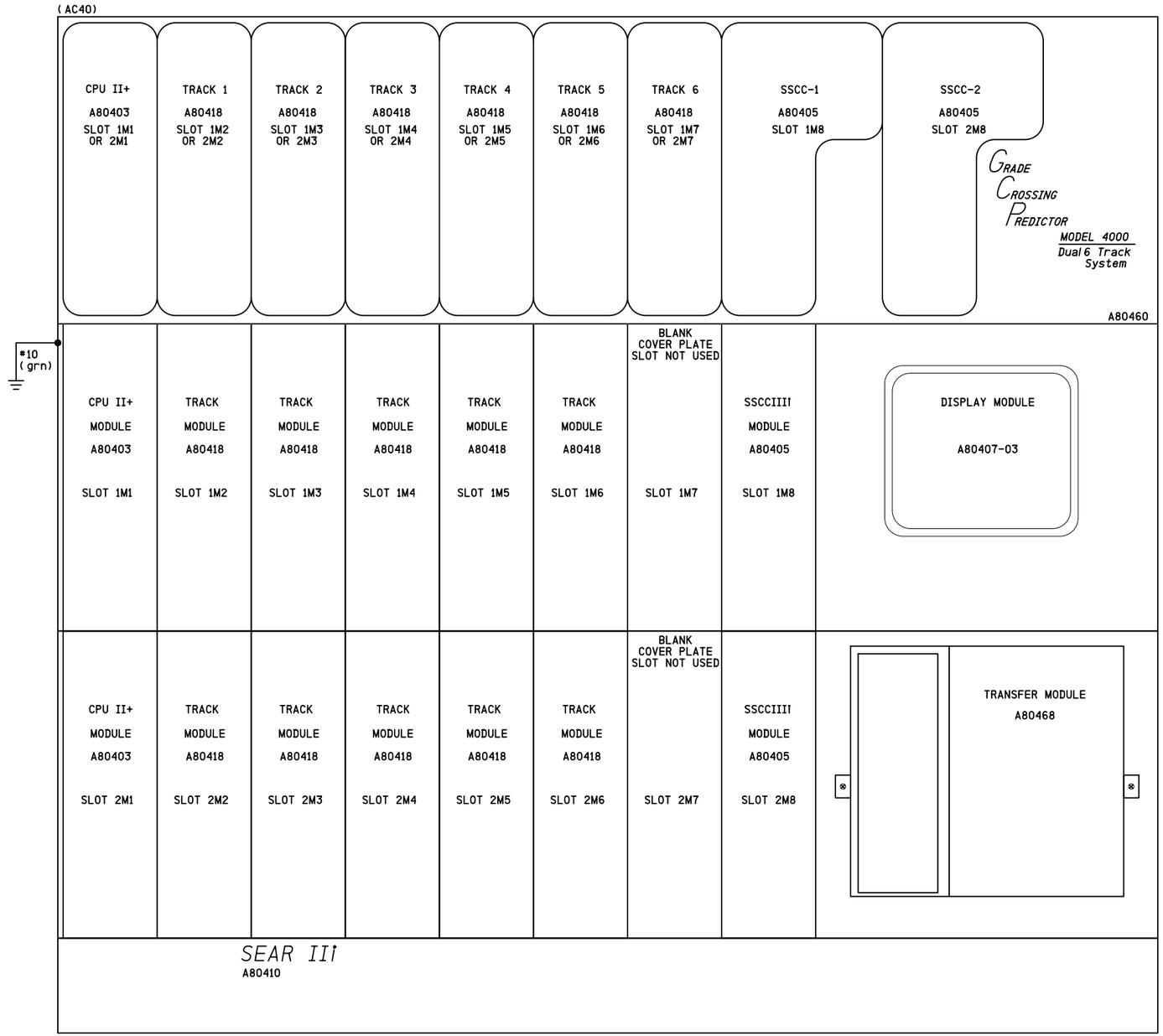


NOTES

1) DISABLE THE DISPLAY HEATER BY REMOVING JUMPER J-22 (LOCATED AT THE EDGE OF THE DISPLAY MODULE CARD THAT PLUGS INTO THE CHASSIS)

2) SET THE TRANSFER INTERVAL TIME TO 3 MINUTES BY SETTING DIPSWITCH S3 (LOCATED IN THE UPPER LEFT CORNER OF THE TRANSFER MODULE CARD) TO:

| S3-0 | S3-1 | S3-2 | S3-3 | S3-4 |
|---|---|---|---|---|
| 1 | 1 | 0 | 0 | 0 |

WHERE 0 = UP/OPEN
1 = DOWN/CLOSED

ATTENTION!

ENSURE THE DISPLAY MODULE HEATER IS DISABLED
LEAVING THE DISPLAY HEATER ENABLED WILL REDUCE THE AMOUNT OF BATTERY STANDBY TIME IN THE EVENT OF AN AC POWER FAILURE

HEATER FUNCTION IS JUMPER SELECTABLE ON THE DISPLAY MODULE BOARD
THREE OPTIONS ARE AVAILABLE
NORMAL LCD HTR (DEFAULT)
HI CURRENT
NO JUMPER (HEATER DISABLED)

SII 25 JUN 2014

PROPOSED
DESIGN NO. 14-0068
RED-IN YELLOW-OUT

AS INSTALLED
DATE _____
BY _____
(PRINT NAME)

| PROPOSED D | M | Y | REVISIONS | D | C | COMPLETED D | M | Y | C |
|---|---|---|---|---|---|---|---|---|---|
| | | | | | | | | | |

REGION SOUTHERN
SUB. CHICAGO 340

SIGNALS AND COMMUNICATIONS HOMEWOOD
25 JUNE 2014
DES. TMF
CH. MRB

GCP 4000
CHASSIS & MODULE LAYOUT
GILMAN, IL
DENT STREET

CHI-081.24-02

DOT# 288 989V

chi-081.24-02.dgn
16-JUN-2015

| SIEMENS INDUSTRY INC | | | |
|---|---|---|---|
| DES.: TMF | DATE: 25/06/14 | JOB NO.: WCNA10382 | |
| CKD.: MRB | ISSUE DATE: N/A | EST. NO.: XP-7259 | |
| DRN.: TMF | PLAN NO.: N/A | SHEET 2 OF 34 | |
| P TIME: 11:24 | P DATE: 16-JUN-2015 | CAD ID.: CHI-081.24-02 | |

SIEMENS INDUSTRY INC
LOUISVILLE DIVISION, LOUISVILLE, KY

| REVISIONS | | | | |
|---|---|---|---|---|
| NO. | DATE | BY | DESCRIPTION | APP. BY |
| 1 | | | | |
| 2 | | | | |
| 3 | | | | |
| 4 | | | | |
| 5 | | | | |

Location and SIN

DOT Number: 288989V
MIlepost Number: 081.24
Site Name: DENT STREET

SIN: 762010010016

MCF and Template Selection

MCF Name: GCP-T6X-02-2.mcf
MCF Revision: 022
MCFCRC: 79225F13

Template = 2C:2 BI, 4 Rem (OCCN)

Check Numbers

Office Check Number: 7528D5A9
Config. Check Number: 1362DA28
(Based on MCF Revision 022)

Program

BASIC: module configuration
Track 1/PSO 1 Slot = Track (OCCN)
Track 2/RIO 1 Slot = Track (OCCN)
Track 3/PSO 2 Slot = Track (OCCN)
Track 4/PSO 3 Slot = Track (OCCN)
Track 5/RIO 2 Slot = Track (OCCN)
Track 6/RIO 3 Slot = Not Used (OCCN)
SSCC-1 Slot = SSCC3I (OCCN)
SSCC-2 Slot = SSCC3I (OCCN)
SEAR Used = Yes (OCCN)

BASIC: MS/GCP operation
Track 1 : MS/GCP Operation = Yes (OCCN)
Track 2 : MS/GCP Operation = Yes (OCCN)
Track 3 : MS/GCP Operation = Yes (OCCN)
Track 4 : MS/GCP Operation = Yes (OCCN)
Track 5 : MS/GCP Operation = Yes (OCCN)

BASIC: Island operation
Track 1 : Island Used = Internal(OCCN)
Track 2 : Island Used = Internal(OCCN)
Track 3 : Island Used = No (OCCN)
Track 4 : Island Used = No (OCCN)
Track 5 : Island Used = No (OCCN)

BASIC: preemption
Preempt Logic = No (OCCN)

BASIC: radio Dax links
Radio DAX link A Used = No (OCCN)
Radio DAX link B Used = No (OCCN)

BASIC: Vital Comms links
Vital Comms link 1 Used = No (OCCN)
Vital Comms link 2 Used = No (OCCN)

PREDICTORS: track 1
Track 1 : Prime Used = Yes (OCCN)
Track 1 : Dax A Used = No (OCCN)
Track 1 : Dax B Used = No (OCCN)
Track 1 : Dax C Used = No (OCCN)
Track 1 : Dax D Used = No (OCCN)
Track 1 : Dax E Used = No (OCCN)
Track 1 : Dax F Used = No (OCCN)
Track 1 : Dax G Used = No (OCCN)

PREDICTORS: track 2
Track 2 : Prime Used = Yes (OCCN)
Track 2 : Dax A Used = No (OCCN)
Track 2 : Dax B Used = No (OCCN)
Track 2 : Dax C Used = No (OCCN)
Track 2 : Dax D Used = No (OCCN)
Track 2 : Dax E Used = No (OCCN)
Track 2 : Dax F Used = No (OCCN)
Track 2 : Dax G Used = No (OCCN)

PREDICTORS: track 3
Track 3 : Prime Used = Yes (OCCN)
Track 3 : Dax A Used = Yes (OCCN)
Track 3 : Dax B Used = No (OCCN)
Track 3 : Dax C Used = No (OCCN)
Track 3 : Dax D Used = No (OCCN)
Track 3 : Dax E Used = No (OCCN)
Track 3 : Dax F Used = No (OCCN)
Track 3 : Dax G Used = No (OCCN)

PREDICTORS: track 4
Track 4 : Prime Used = Yes (OCCN)
Track 4 : Dax A Used = Yes (OCCN)
Track 4 : Dax B Used = Yes (OCCN)
Track 4 : Dax C Used = Yes (OCCN)
Track 4 : Dax D Used = No (OCCN)
Track 4 : Dax E Used = No (OCCN)
Track 4 : Dax F Used = No (OCCN)
Track 4 : Dax G Used = No (OCCN)

PREDICTORS: track 5
Track 5 : Prime Used = Yes (OCCN)
Track 5 : Dax A Used = Yes (OCCN)
Track 5 : Dax B Used = No (OCCN)
Track 5 : Dax C Used = No (OCCN)
Track 5 : Dax D Used = No (OCCN)
Track 5 : Dax E Used = No (OCCN)
Track 5 : Dax F Used = No (OCCN)
Track 5 : Dax G Used = No (OCCN)

GCP: track 1
Track 1 : GCP Freq Category = Standard (Field)
Track 1 : GCP Frequency = 525 Hz (Field, TCN)
Track 1 : Approach Distance = 1532 ft (Field, TCN)
Track 1 : Unl/Bl/Sim-Bldirnl = Bldirnl(OCCN, TCN)
Track 1 : GCP Transmit Level = High (Field, TCN)
Track 1 : Island Connection = Isl1(OCCN)
Track 1 : Directionally Wired = No (OCCN)
Track 1 : Island Distance = 120 ft (Field, TCN)
Track 1 : Computed Distance = 9999 ft (Field, TCN)
Track 1 : Linearization Steps = 100 (Field, TCN)

GCP: track 1 enhanced det
Track 1 : Inbound PS Sensitivity = High (Field)
Track 1 : Speed Limiting Used = Yes (Field)
Track 1 : Outbound False Act Lvl = Normal(Field)
Track 1 : Outbound PS Timer = 20 sec (Field)
Track 1 : Trailing Switch Logic = On (Field)
Track 1 : Post Joint Detn Time = 15 sec (OCCN)
Track 1 : Adv Appr Predn = No (OCCN)
Track 1 : Cancel Pickup Delay = This Isl(OCCN)

GCP: track 1 BIDAX RX
Track 1 : BIDAX To RX Appr = Not Used (OCCN)

GCP: track 1 BIDAX TX
Track 1 : BIDAX To TX Appr = Not Used (OCCN)

GCP: track 1 prime
Track 1 : Prime Warning Time = 33 sec (OCCN)
Track 1 : Prime Offset Distance = 0 ft (Field)
Track 1 : Switch MS EZ Level = 18 (OCCN)
Track 1 : Prime MS/GCP Mode = Pred (OCCN)
Track 1 : Prime Pickup Delay = 30 sec (OCCN)
Track 1 : Prime UAX = IP (OCCN)
Track 1 : Prime UAX Pickup = 22 sec (OCCN)

GCP: track 1 pos start
Track 1 : Positive Start = Off (OCCN)
Track 1 : Sudden Shnt Det Used = No (OCCN)
Track 1 : Low EZ Detection Used = No (OCCN)

GCP: track 1 MS Control
Track 1 : MS/GCP Ctrl IP Used = No (OCCN)
Track 1 : MS Sensitivity Level = 0 (Field)
Track 1 : Compensation Level = 1300 (Field, TCN)
Track 1 : Warn Time-Ballast Comp = High (Field, TCN)
Track 1 : Low EX Adjustment = 39 (Field)
Track 1 : Bldirn Dax Passthru = No (OCCN)
Track 1 : False Act on Train Stop = No (Field)
Track 1 : EX Limiting Used = Yes (Field)
Track 1 : EZ Correction Used = Yes (Field)

GCP: track 2
Track 2 : GCP Freq Category = Standard (Field)
Track 2 : GCP Frequency = 970 Hz (Field, TCN)
Track 2 : Approach Distance = 850 ft (Field, TCN)
Track 2 : Unl/Bl/Sim-Bldirnl = Bldirnl(OCCN, TCN)
Track 2 : GCP Transmit Level = High (Field, TCN)
Track 2 : Island Connection = Isl2(OCCN)
Track 2 : Directionally Wired = No (OCCN)
Track 2 : Island Distance = 120 ft (Field, TCN)
Track 2 : Computed Distance = 9999 ft (Field, TCN)
Track 2 : Linearization Steps = 100 (Field, TCN)

GCP: track 2 enhanced det
Track 2 : Inbound PS Sensitivity = High (Field)
Track 2 : Speed Limiting Used = Yes (Field)
Track 2 : Outbound False Act Lvl = Normal(Field)
Track 2 : Outbound PS Timer = 20 sec (Field)
Track 2 : Trailing Switch Logic = On (Field)
Track 2 : Post Joint Detn Time = 15 sec (OCCN)
Track 2 : Adv Appr Predn = No (OCCN)
Track 2 : Cancel Pickup Delay = This Isl(OCCN)

GCP: track 2 BIDAX RX
Track 2 : BIDAX To RX Appr = Not Used (OCCN)

GCP: track 2 BIDAX TX
Track 2 : BIDAX To TX Appr = Not Used (OCCN)

GCP: track 2 prime
Track 2 : Prime Offset Distance = 0 ft (Field)
Track 2 : Prime MS/GCP Mode = MS (OCCN)
Track 2 : Prime Pickup Delay = 30 sec (OCCN)
Track 2 : Prime UAX = Not Used (OCCN)

GCP: track 2 pos start
Track 2 : Positive Start = Off (OCCN)
Track 2 : Sudden Shnt Det Used = No (OCCN)
Track 2 : Low EZ Detection Used = No (OCCN)

GCP: track 2 MS Control
Track 2 : MS/GCP Ctrl IP Used = No (OCCN)
Track 2 : MS Sensitivity Level = 0 (Field)
Track 2 : Compensation Level = 1300 (Field, TCN)
Track 2 : Warn Time-Ballast Comp = Low (Field, TCN)
Track 2 : Low EX Adjustment = 39 (Field)
Track 2 : Bldirn Dax Passthru = No (OCCN)
Track 2 : False Act on Train Stop = No (Field)
Track 2 : EX Limiting Used = Yes (Field)
Track 2 : EZ Correction Used = Yes (Field)

GCP: track 3
Track 3 : GCP Freq Category = Standard (Field)
Track 3 : GCP Frequency = 970 Hz (Field, TCN)
Track 3 : Approach Distance = 496 ft (Field, TCN)
Track 3 : Unl/Bl/Sim-Bldirnl = Unldirnl(OCCN, TCN)
Track 3 : GCP Transmit Level = High (Field, TCN)
Track 3 : Island Connection = No Islands (OCCN)
Track 3 : Directionally Wired = No (OCCN)
Track 3 : Island Distance = 0 ft (Field, TCN)
Track 3 : Computed Distance = 9999 ft (Field, TCN)
Track 3 : Linearization Steps = 100 (Field, TCN)

GCP: track 3 enhanced det
Track 3 : Inbound PS Sensitivity = High (Field)
Track 3 : Speed Limiting Used = Yes (Field)
Track 3 : Outbound False Act Lvl = Normal(Field)
Track 3 : Outbound PS Timer = 20 sec (Field)
Track 3 : Trailing Switch Logic = On (Field)
Track 3 : Post Joint Detn Time = 15 sec (OCCN)
Track 3 : Adv Appr Predn = No (OCCN)
Track 3 : Cancel Pickup Delay = This Isl(OCCN)

GCP: track 3 BIDAX RX
Track 3 : BIDAX To RX Appr = Not Used (OCCN)

GCP: track 3 BIDAX TX
Track 3 : BIDAX To TX Appr = Not Used (OCCN)

GCP: track 3 prime
Track 3 : Prime Warning Time = 33 sec (OCCN)
Track 3 : Prime Offset Distance = 310 ft (Field)
Track 3 : Switch MS EZ Level = 0 (OCCN)
Track 3 : Pickup Delay Mode = Auto (OCCN)
Track 3 : Prime MS/GCP Mode = Pred (OCCN)
Track 3 : Prime Pickup Delay = 30 sec (OCCN)
Track 3 : Prime UAX = Not Used (OCCN)

GCP: track 3 Dax A
Track 3 : Dax A Warning Time = 42 sec (OCCN)
Track 3 : Dax A Offset Distance = 1484 ft (Field)
Track 3 : Switch MS EZ Level = 0 (OCCN)
Track 3 : Pickup Delay Mode = Auto (OCCN)
Track 3 : Dax A MS/GCP Mode = Pred (OCCN)
Track 3 : Dax A Pickup Delay = 8 sec (OCCN)
Track 3 : Dax A Enable = Not Used (OCCN)

GCP: track 3 pos start
Track 3 : Positive Start = Off (OCCN)
Track 3 : Sudden Shnt Det Used = No (OCCN)
Track 3 : Low EZ Detection Used = No (OCCN)

GCP: track 3 MS Control
Track 3 : MS/GCP Ctrl IP Used = No (OCCN)
Track 3 : MS Sensitivity Level = 0 (Field)
Track 3 : Compensation Level = 1300 (Field, TCN)
Track 3 : Warn Time-Ballast Comp = Low (Field, TCN)
Track 3 : Low EX Adjustment = 39 (Field)
Track 3 : Bldirn Dax Passthru = No (OCCN)
Track 3 : False Act on Train Stop = No (Field)
Track 3 : EX Limiting Used = Yes (Field)
Track 3 : EZ Correction Used = Yes (Field)

GCP: track 4
Track 4 : GCP Freq Category = Standard (Field)
Track 4 : GCP Frequency = 86 Hz (Field, TCN)
Track 4 : Approach Distance = 3544 ft (Field, TCN)
Track 4 : Unl/Bl/Sim-Bldirnl = Sim. Bldirnl(OCCN, TCN)
Track 4 : GCP Transmit Level = High (Field, TCN)
Track 4 : Island Connection = No Islands (OCCN)
Track 4 : Directionally Wired = No (OCCN)
Track 4 : Island Distance = 0 ft (Field, TCN)
Track 4 : Computed Distance = 9999 ft (Field, TCN)
Track 4 : Linearization Steps = 100 (Field, TCN)

GCP: track 4 enhanced det
Track 4 : Inbound PS Sensitivity = High (Field)
Track 4 : Speed Limiting Used = Yes (Field)
Track 4 : Outbound False Act Lvl = Normal(Field)
Track 4 : Outbound PS Timer = 20 sec (Field)
Track 4 : Trailing Switch Logic = On (Field)
Track 4 : Post Joint Detn Time = 15 sec (OCCN)
Track 4 : Adv Appr Predn = No (OCCN)
Track 4 : Cancel Pickup Delay = This Isl(OCCN)

GCP: track 4 BIDAX RX
Track 4 : BIDAX To RX Appr = Not Used (OCCN)

GCP: track 4 BIDAX TX
Track 4 : BIDAX To TX Appr = Not Used (OCCN)

GCP: track 4 prime
Track 4 : Prime Warning Time = 33 sec (OCCN)
Track 4 : Prime Offset Distance = 806 ft (Field)
Track 4 : Switch MS EZ Level = 0 (OCCN)
Track 4 : Pickup Delay Mode = Auto (OCCN)
Track 4 : Prime MS/GCP Mode = Pred (OCCN)
Track 4 : Prime Pickup Delay = 30 sec (OCCN)
Track 4 : Prime UAX = Not Used (OCCN)

GCP: track 4 Dax A
Track 4 : Dax A Warning Time = 42 sec (OCCN)
Track 4 : Dax A Offset Distance = 1980 ft (Field)
Track 4 : Switch MS EZ Level = 0 (OCCN)
Track 4 : Pickup Delay Mode = Auto (OCCN)
Track 4 : Dax A MS/GCP Mode = Pred (OCCN)
Track 4 : Dax A Pickup Delay = 8 sec (OCCN)
Track 4 : Dax A Enable = Not Used (OCCN)

GCP: track 4 Dax B
Track 4 : Dax B Warning Time = 32 sec (OCCN)
Track 4 : Dax B Offset Distance = 2542 ft (Field)
Track 4 : Switch MS EZ Level = 0 (OCCN)
Track 4 : Pickup Delay Mode = Auto (OCCN)
Track 4 : Dax B MS/GCP Mode = Pred (OCCN)
Track 4 : Dax B Pickup Delay = 8 sec (OCCN)
Track 4 : Dax B Enable = Not Used (OCCN)

GCP: track 4 Dax C
Track 4 : Dax C Warning Time = 34 sec (OCCN)
Track 4 : Dax C Offset Distance = 3912 ft (Field)
Track 4 : Switch MS EZ Level = 0 (OCCN)
Track 4 : Pickup Delay Mode = Auto (OCCN)
Track 4 : Dax C MS/GCP Mode = Pred (OCCN)
Track 4 : Dax C Pickup Delay = 8 sec (OCCN)
Track 4 : Dax C Enable = Not Used (OCCN)

GCP: track 4 pos start
Track 4 : Positive Start = Off (OCCN)
Track 4 : Sudden Shnt Det Used = No (OCCN)
Track 4 : Low EZ Detection Used = No (OCCN)

GCP: track 4 MS Control
Track 4 : MS/GCP Ctrl IP Used = No (OCCN)
Track 4 : MS Sensitivity Level = 0 (Field)
Track 4 : Compensation Level = 1300 (Field, TCN)
Track 4 : Warn Time-Ballast Comp = High (Field, TCN)
Track 4 : Low EX Adjustment = 39 (Field)
Track 4 : Bldirn Dax Passthru = No (OCCN)
Track 4 : False Act on Train Stop = No (Field)
Track 4 : EX Limiting Used = Yes (Field)
Track 4 : EZ Correction Used = Yes (Field)

GCP: track 5
Track 5 : GCP Freq Category = Standard (Field)
Track 5 : GCP Frequency = 285 Hz (Field, TCN)
Track 5 : Approach Distance = 1434 ft (Field, TCN)
Track 5 : Unl/Bl/Sim-Bldirnl = Unldirnl(OCCN, TCN)
Track 5 : GCP Transmit Level = High (Field, TCN)
Track 5 : Island Connection = No Islands (OCCN)
Track 5 : Directionally Wired = No (OCCN)
Track 5 : Island Distance = 0 ft (Field, TCN)
Track 5 : Computed Distance = 9999 ft (Field, TCN)
Track 5 : Linearization Steps = 100 (Field, TCN)

GCP: track 5 enhanced det
Track 5 : Inbound PS Sensitivity = High (Field)
Track 5 : Speed Limiting Used = Yes (Field)
Track 5 : Outbound False Act Lvl = Normal(Field)
Track 5 : Outbound PS Timer = 20 sec (Field)
Track 5 : Trailing Switch Logic = On (Field)
Track 5 : Post Joint Detn Time = 15 sec (OCCN)
Track 5 : Adv Appr Predn = No (OCCN)
Track 5 : Cancel Pickup Delay = This Isl(OCCN)

GCP: track 5 BIDAX RX
Track 5 : BIDAX To RX Appr = Not Used (OCCN)

GCP: track 5 BIDAX TX
Track 5 : BIDAX To TX Appr = Not Used (OCCN)

GCP: track 5 prime
Track 5 : Prime Warning Time = 33 sec (OCCN)
Track 5 : Prime Offset Distance = 806 ft (Field)
Track 5 : Switch MS EZ Level = 0 (OCCN)
Track 5 : Pickup Delay Mode = Auto (OCCN)
Track 5 : Prime MS/GCP Mode = Pred (OCCN)
Track 5 : Prime Pickup Delay = 30 sec (OCCN)
Track 5 : Prime UAX = Not Used (OCCN)

GCP: track 5 Dax A
Track 5 : Dax A Warning Time = 42 sec (OCCN)
Track 5 : Dax A Offset Distance = 1980 ft (Field)
Track 5 : Switch MS EZ Level = 0 (OCCN)
Track 5 : Pickup Delay Mode = Auto (OCCN)
Track 5 : Dax A MS/GCP Mode = Pred (OCCN)
Track 5 : Dax A Pickup Delay = 8 sec (OCCN)
Track 5 : Dax A Enable = Not Used (OCCN)

GCP: track 5 pos start
Track 5 : Positive Start = Off (OCCN)
Track 5 : Sudden Shnt Det Used = No (OCCN)
Track 5 : Low EZ Detection Used = No (OCCN)

GCP: track 5 MS Control
Track 5 : MS/GCP Ctrl IP Used = No (OCCN)
Track 5 : MS Sensitivity Level = 0 (Field)
Track 5 : Compensation Level = 1300 (Field, TCN)
Track 5 : Warn Time-Ballast Comp = Low (Field, TCN)
Track 5 : Low EX Adjustment = 39 (Field)
Track 5 : Bldirn Dax Passthru = No (OCCN)
Track 5 : False Act on Train Stop = No (Field)
Track 5 : EX Limiting Used = Yes (Field)
Track 5 : EZ Correction Used = Yes (Field)

ISLAND: track 1
Track 1 : IslFrequency = 8.3 kHz (Field)
Track 1 : Pickup Delay (2s +) = 0 sec (OCCN)
Track 1 : IslEnable IP Used = No (OCCN)

ISLAND: track 2
Track 2 : IslFrequency = 7.1 kHz (Field)
Track 2 : Pickup Delay (2s +) = 0 sec (OCCN)
Track 2 : IslEnable IP Used = No (OCCN)

AND: track Anding
AND 1 XR Used = Yes (OCCN)
AND 2 Used = Yes (OCCN)
AND 3 Used = Yes (OCCN)
AND 4 Used = No (OCCN)
AND 5 Used = No (OCCN)
AND 6 Used = No (OCCN)
AND 7 Used = No (OCCN)
AND 8 Used = No (OCCN)

AND: AND 1 XR
AND 1 XR Track 1 = Prime (OCCN)
AND 1 XR Track 2 = Prime (OCCN)
AND 1 XR Track 3 = Prime (OCCN)
AND 1 XR Track 4 = Prime (OCCN)
AND 1 XR Track 5 = Prime (OCCN)
AND 1 Enable Used = Yes (OCCN)
And 1 Enable Pickup = 0 sec (OCCN)
AND 1 Enable Drop = 0 sec (OCCN)
AND 1 Wrap Used = No (OCCN)

CONT'D ON
SHEET 04

TEMPLATE MTF-2C

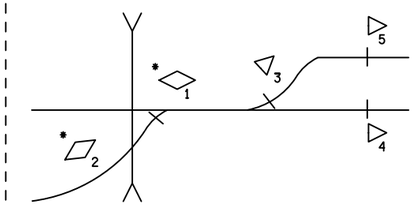


* INDICATES TRACK WITH ISLAND

NOTES

1) DISTANCE(S) TO BE VERIFIED AT INSTALLATION
INDICATE SELECTED PROGRAMMED VALUE IF DIFFERENT THAN SHOWN
REFER TO 4000 GCP INSTRUCTION/INSTALLATION MANUAL
FOR PROGRAMMING PARAMETERS

2) PROGRAM TEXT HIGHLIGHTED IN RED INDICATES 4000 PROGRAM
MODIFICATIONS TO DEFAULT PROGRAM VALUES

3) EACH CONSTANT WARNING DEVICE SYSTEM (T1) TO BE PROGRAMMED TO
CONVERT TO A MOTION SENSOR 300 FEET FROM EDGE OF ROAD
TRAVELLED WAY
SHUNT TRACK 300 FEET FROM EDGE OF ROAD TRAVELLED WAY
AND NOTE "EZ" VALUE
PROGRAM EACH SYSTEM WITH THE INDICATED "EZ" VALUE +2

4) VERIFY SET TIMER VALUE TO MATCH ACTUAL TRAIN MOVEMENT
WITHIN THE CROSSING APPROACH CIRCUITS

SII 25 JUN 2014

PROPOSED
DESIGN NO. 14-0068
RED-IN YELLOW-OUT

AS INSTALLED
DATE _____
BY _____
(PRINT NAME)

| PROPOSED | | | REVISIONS | D | C | COMPLETED | | | C |
|---|---|---|---|---|---|---|---|---|---|
| D | M | Y | | | | D | M | Y | |

REGION SOUTHERN
SUB. CHICAGO 340

SIGNALS AND COMMUNICATIONS HOMEWOOD
25 JUNE 2014
DES. TMF
CH. MRB

GCP 4000
PROGRAM INFORMATION
GILMAN, IL
DENT STREET

CHI-081.24-03

DOT# 288 989V

SIEMENS INDUSTRY INC

| | | | |
|---|---|---|---|
| DES.: TMF | DATE: 25/06/14 | JOB NO.: WCNA10382 | |
| CKD.: MRB | ISSUE DATE: N/A | EST. NO.: XP-7259 | |
| DRN.: TMF | PLAN NO.: N/A | SHEET 3 OF 34 | |
| P TIME: 11:24 | P DATE: 16-JUN-2015 | CAD ID.: CHI-081.24-03 | |

chi-081.24-03.dgn
16-JUN-2015

| REVISIONS | | | | |
|---|---|---|---|---|
| NO. | DATE | BY | DESCRIPTION | APP. BY |
| 1 | | | | |
| 2 | | | | |
| 3 | | | | |
| 4 | | | | |
| 5 | | | | |

CONT'D ON
SHEET 03

```
AND:  AND 2
AND 2 Track 1 = Not Used (OCCN)
AND 2 Track 2 = Not Used (OCCN)
AND 2 Track 3 = Not Used (OCCN)
AND 2 Track 4 = Not Used (OCCN)
AND 2 Track 5 = Not Used (OCCN)
AND 2 Enable Used = Yes (OCCN)
AND 2 Enable Pickup = 0 sec (OCCN)
AND 2 Enable Drop = 0 sec (OCCN)
AND 2 Wrap Used = No (OCCN)

AND:  AND 3
AND 3 Track 1 = Not Used (OCCN)
AND 3 Track 2 = Not Used (OCCN)
AND 3 Track 3 = Dax A (OCCN)
AND 3 Track 4 = Not Used (OCCN)
AND 3 Track 5 = Dax A (OCCN)
AND 3 Enable Used = No (OCCN)
AND 3 Wrap Used = No (OCCN)

ADVANCED:  MS restart
MS/GCP Restart Used = No (OCCN)

ADVANCED:  out of service
OOS Control= OOS IPs (OCCN)

ADVANCED:  out of service 2
T1 OOS Control= OOS Input 1 (OCCN)
T2 OOS Control= OOS Input 2 (OCCN)
T3 OOS Control= OOS Input 3 (OCCN)
T4 OOS Control= OOS Input 1 (OCCN)
T5 OOS Control= OOS Input 3 (OCCN)
T1 OOS Controls = GCP and Island (OCCN)
T2 OOS Controls = GCP and Island (OCCN)
T3 OOS Controls = GCP Only (OCCN)
T4 OOS Controls = GCP Only (OCCN)
T5 OOS Controls = GCP Only (OCCN)

ADVANCED:  track wrap circuits
Wrap LOS Timer = 5 sec (OCCN)
Track 1 Wrap Used = No (OCCN)
Track 2 Wrap Used = No (OCCN)
Track 3 Wrap Used = No (OCCN)
Track 4 Wrap Used = No (OCCN)
Track 5 Wrap Used = No (OCCN)

ADVANCED:  trk 1 overrides
Track 1 : All Predictors Override Used = No (OCCN)

ADVANCED:  trk 2 overrides
Track 2 : All Predictors Override Used = No (OCCN)

ADVANCED:  trk 3 overrides
Track 3 : All Predictors Override Used = No (OCCN)
Track 3 : Dax A Override Used = No (OCCN)

ADVANCED:  trk 4 overrides
Track 4 : All Predictors Override Used = No (OCCN)
Track 4 : Dax A Override Used = No (OCCN)
Track 4 : Dax B Override Used = No (OCCN)
Track 4 : Dax C Override Used = No (OCCN)

ADVANCED:  trk 5 overrides
Track 5 : All Predictors Override Used = No (OCCN)
Track 5 : Dax A Override Used = No (OCCN)

ADVANCED:  OR logic
OR 1 Used = No (OCCN)
OR 2 Used = No (OCCN)
OR 3 Used = No (OCCN)
OR 4 Used = No (OCCN)

ADVANCED:  Internal I/O 1
Pass Thrus = Yes (OCCN)
Int.1 Sets = AND 2 Enable (OCCN)
Int.1 Set by = Passthru State 1 (OCCN)
Int.2 Sets = AND 2 Enable (OCCN)
Int.2 Set by = Passthru State 2 (OCCN)
Int.3 Sets = GD 1.1 (OCCN)
Int.3 Set by = Passthru State 1 (OCCN)
Int.4 Sets = GD 2.1 (OCCN)
Int.4 Set by = Passthru State 2 (OCCN)

ADVANCED:  Internal I/O 2
Int.5 Sets = Not Used (OCCN)
Int.5 Set by = Not Used (OCCN)
Int.6 Sets = Not Used (OCCN)
Int.6 Set by = Not Used (OCCN)
Int.7 Sets = Not Used (OCCN)
Int.7 Set by = Not Used (OCCN)
Int.8 Sets = Not Used (OCCN)
Int.8 Set by = Not Used (OCCN)

ADVANCED:  Internal I/O 3
Int.9 Sets = Not Used (OCCN)
Int.9 Set by = Not Used (OCCN)
Int.10 Sets = Not Used (OCCN)
Int.10 Set by = Not Used (OCCN)
Int.11 Sets = Not Used (OCCN)
Int.11 Set by = Not Used (OCCN)
Int.12 Sets = Not Used (OCCN)
Int.12 Set by = Not Used (OCCN)

ADVANCED:  Internal I/O 4
Int.13 Sets = Not Used (OCCN)
Int.13 Set by = Not Used (OCCN)
Int.14 Sets = Not Used (OCCN)
Int.14 Set by = Not Used (OCCN)
Int.15 Sets = Not Used (OCCN)
Int.15 Set by = Not Used (OCCN)
Int.16 Sets = Not Used (OCCN)
Int.16 Set by = Not Used (OCCN)

ADVANCED:  site options
Daylight Savings = Off (Field)
Units = Standard (OCCN)
Maint Call Rpt IP Used = No (OCCN)
Emergency Activate IP = No (OCCN)
EZ/EX Logging = Change (Field)
EZ/EX Point Change = 3   (Field)

SSCC
Gates Used = Yes (OCCN)
SSCC1+2 GPs Coupled = Yes (OCCN)
Min Activation = 23 sec (OCCN)
Rmt Activation Cancel= 3 min (OCCN)
Bell On Gate Rising = No (OCCN)
Mute Bell On Gate Down = Yes (OCCN)
SSCCIV Controller Used = No (OCCN)

SSCC:  1
SSCC-1 Activation = AND 1 XR (OCCN)
SSCC-1 Gate Delay = 4 sec (OCCN)
SSCC-1 Number of GPs = 1 (OCCN)
SSCC-1 Number of GDs = 1 (OCCN)
SSCC 1 : Flash Rate = 55 (OCCN)
SSCC 1 : Low Battery Detection = No (Field)
SSCC 1 : Flash Sync = master (OCCN)
SSCC 1 : Invert Gate Output = No (OCCN)
SSCC 1 : Lamp Neutral Test = Off (Field)
Aux-1 Xng Ctrl Used = No (OCCN)

SSCC:  2
SSCC-2 Activation = AND 1 XR (OCCN)
SSCC-2 Gate Delay = 4 sec (OCCN)
SSCC-2 Number of GPs = 0 (OCCN)
SSCC-2 Number of GDs = 1 (OCCN)
SSCC 2 : Flash Rate = 55 (OCCN)
SSCC 2 : Low Battery Detection = No (Field)
SSCC 2 : Flash Sync = slave (OCCN)
SSCC 2 : Invert Gate Output = No (OCCN)
SSCC 2 : Lamp Neutral Test = Off (Field)
Aux-2 Xng Ctrl Used = No (OCCN)

OUTPUT:  assignment page 1
OUT 1.1 = AND 1 XR (OCCN)
OUT 1.2 = AND 2 (OCCN)
OUT 2.1 = Not Used (OCCN)
OUT 2.2 = Not Used (OCCN)
OUT 3.1 = AND 3 (OCCN)
OUT 3.2 = Not Used (OCCN)

OUTPUT:  assignment page 2
OUT 4.1 = T4 Dax A (OCCN)
OUT 4.2 = T4 Dax B (OCCN)
OUT 5.1 = T4 Dax C (OCCN)
OUT 5.2 = Not Used (OCCN)

INPUT:  assignment page 1
IN 1.1 = T1 Prime UAX (OCCN)
IN 1.2 = Not Used (OCCN)
IN 2.1 = Not Used (OCCN)
IN 2.2 = Not Used (OCCN)
IN 3.1 = Not Used (OCCN)
IN 3.2 = Not Used (OCCN)

INPUT:  assignment page 2
IN 4.1 = Not Used (OCCN)
IN 4.2 = Not Used (OCCN)
IN 5.1 = Not Used (OCCN)
IN 5.2 = Not Used (OCCN)

IO:  assignment SSCC
OUT GC 1 = Gate Output 1 (OCCN)
OUT GC 2 = Gate Output 2 (OCCN)
IN 7.1 = AND 1 XR Enable (OCCN)
IN 7.2 = Out Of Service IP 3 (OCCN)
IN 7.3 = Not Used (OCCN)
IN 7.4 = Passthru State 1 (OCCN)
IN 7.5 = GP 1.1 (OCCN)
IN 8.1 = Out Of Service IP 1 (OCCN)
IN 8.2 = Out Of Service IP 2 (OCCN)
IN 8.3 = Not Used (OCCN)
IN 8.4 = Passthru State 2 (OCCN)
IN 8.5 = Not Used (OCCN)

SEAR
SEAR Subnode = 99   (OCCN)
DI 1 = General1 (OCCN)
DI 2 = Gnd Flt Tester 1 (OCCN)
Rly 1 = Ground Fault Test (OCCN)
Rly 2 = AC Control(OCCN)

SEAR:  Inputs
SP 2.1 = POK 1 (OCCN)
SP 3.1 = Not Used (OCCN)
SP 4.1 = Not Used (OCCN)
SP 5.1 = Not Used (OCCN)
SP 6.1 = Not Used (OCCN)

SEAR:  slot 1-4 Inputs
IN 1.2 = Not Used (OCCN)
IN 2.1 = Not Used (OCCN)
IN 2.2 = POK 2 (OCCN)
IN 3.1 = Not Used (OCCN)
IN 3.2 = Not Used (OCCN)
IN 4.1 = Not Used (OCCN)
IN 4.2 = Not Used (OCCN)

SEAR:  Inputs slot 5
IN 5.1 = Not Used (OCCN)
IN 5.2 = Not Used (OCCN)

SEAR:  Inputs slot 6
IN 6.1 = Not Used (OCCN)
IN 6.2 = Not Used (OCCN)

SEAR:  slot 7-8 Inputs
IN 7.3 = TSS 1 (OCCN)
IN 8.3 = TSS 2 (OCCN)
IN 8.5 = General2 (OCCN)

SITE:  programming
Radio Subnode = 1  (Field)
Field Password = Off (OCCN)
Low Battery Enabled = Off (Field)

Configuration Package File
--------------------------
Filename: chi-081.24.pac
```

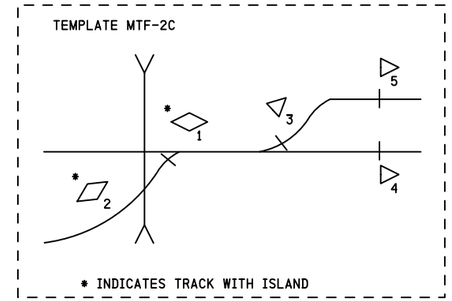


NOTES

1) DISTANCE(S) TO BE VERIFIED AT INSTALLATION
   INDICATE SELECTED PROGRAMMED VALUE IF DIFFERENT THAN SHOWN
   REFER TO 4000 GCP INSTRUCTION/INSTALLATION MANUAL
   FOR PROGRAMMING PARAMETERS

2) PROGRAM TEXT HIGHLIGHTED IN RED INDICATES 4000 PROGRAM
   MODIFICATIONS TO DEFAULT PROGRAM VALUES

3) EACH CONSTANT WARNING DEVICE SYSTEM (T1) TO BE PROGRAMMED TO
   CONVERT TO A MOTION SENSOR 300 FEET FROM EDGE OF ROAD
   TRAVELLED WAY
   SHUNT TRACK 300 FEET FROM EDGE OF ROAD TRAVELLED WAY
   AND NOTE "EZ" VALUE
   PROGRAM EACH SYSTEM WITH THE INDICATED "EZ" VALUE +2

4) VERIFY SET TIMER VALUE TO MATCH ACTUAL TRAIN MOVEMENT
   WITHIN THE CROSSING APPROACH CIRCUITS

SII 25 JUN 2014

PROPOSED
DESIGN NO. 14-0068
RED-IN YELLOW-OUT

AS INSTALLED
DATE _____
BY _____
(PRINT NAME)

| PROPOSED | | | REVISIONS | D | C | COMPLETED | | | C |
|---|---|---|---|---|---|---|---|---|---|
| D | M | Y | | | | D | M | Y | |

REGION SOUTHERN
SUB. CHICAGO 340

SIGNALS AND COMMUNICATIONS HOMEWOOD
25 JUNE 2014
DES. TMF
CH. MRB

GCP 4000
PROGRAM INFORMATION
GILMAN, IL
DENT STREET

CHI-081.24-04

DOT# 288 989V

chi-081.24-04.dgn
16-JUN-2015

| SIEMENS INDUSTRY INC | | | |
|---|---|---|---|
| DES.: TMF | DATE: 25/06/14 | JOB NO.: WCNA10382 | |
| CKD.: MRB | ISSUE DATE: N/A | EST. NO.: XP-7259 | |
| DRN.: TMF | PLAN NO.: N/A | SHEET 4 OF 34 | |
| P TIME: 11:24 | P DATE: 16-JUN-2015 | CAD ID.: CHI-081.24-04 | |

SIEMENS INDUSTRY INC
LOUISVILLE DIVISION, LOUISVILLE, KY

| REVISIONS | | | | |
|---|---|---|---|---|
| NO. | DATE | BY | DESCRIPTION | APP. BY |
| 1 | | | | |
| 2 | | | | |
| 3 | | | | |
| 4 | | | | |
| 5 | | | | |

TO CONFIGURE SEARII & SEARIII PRESS SITE SETUP KEY. USE ARROW KEYS TO MAKE SELECTION, PRESS ENTER AFTER SELECTION HAS BEEN MADE.

STAGE 1

| PROGRAM MENU QUESTIONS | PROGRAM | OPTIONS/RANGE |
|---|---|---|
| DATE/TIME? | CURRENT DATE/TIME | CURRENT DATE/TIME |
| AUTOMATIC DST ADJUSTMENT? | YES | YES, NO |
| TIME ZONE? | CENTRAL | EASTERN, CENTRAL, MOUNTAIN, PACIFIC, ALASKA, HAWAII, ATLANTIC, SASKATCHEWAN, NEW FOUNLAND |
| SITE NAME? | DENT STREET | STREET NAME |
| MILE POST? | 081.24 | MILEAGE |
| DOT/CROSSING IS #? | 288 989V | 123456A |
| TESTER TYPE? | CROSSING | CROSSING, WAYSIDE |
| DATE FORMAT? | dd-mm-yyyy | mm-dd-yyyy, dd-mm-yyyy |
| TEMPERATURE FORMAT? | FAHRENHEIT | FAHRENHEIT, CELSIUS |
| INDICATE HOLD? | 0 | SECONDS |
| SITE TYPE? | | NO COM, BULLHORN, DIALUP, NODE, COLLECTOR |
| SITE ATCS ADDRESS? | | 7.RRR.LLL.GGG.99.01 |
| OFFICE ATCS ADDRESS? | | 2.RRR.NN.DDDD |
| PRIMARY HOP ADDR? (FOR NODE USE) | | 7.RRR.LLL.GGG.00.01 |
| BACKUP HOP ADDR1? (FOR NODE USE) | | 7.RRR.LLL.GGG.00.01 |
| BACKUP HOP ADDR2? (FOR NODE USE) | | 7.RRR.LLL.GGG.00.01 |
| POLL ID? (FOR COLLECTOR USE) | | 1-99 |
| MODE? (FOR COLLECTOR USE) | | GEN/ATCS, GENISYS |
| WAMS/XID? (FOR COLLECTOR USE) | | ENABLED, DISABLE |
| OFFICE COMM. DEVICE? (FOR COLLECTOR USE) | | DIRECT (RS232)<br>MCM (RS232)<br>MCM (ECHELON)<br>SREAD SPEC (ECHELON)<br>DIAL MODEM (RS232)<br>S200 RADIO (RS422) |
| OFFICE PHONE NUMBER? (FOR COLLECTOR USE) | | PHONE NUMBER OF WAMS |
| INIT STRING? (FOR COLLECTOR USE) | | OPTIONAL HAYES MODEM INITIALIZATION STRING |
| FIELD COMM. DEVICE? | | VHF COMM. (ECHELON)<br>VHF COMM. (RS232)<br>SPREAD SPEC (ECHELON)<br>SPREAD SPEC (RS232) |
| USER PORT? | 57600, 8, N, 1, N | BAUD, DATA BITS, PARITY, STOP BITS, FLOW CONTROL |
| AUX PORT? | 9600, 8, N, 1, N | BAUD, DATA BITS, PARITY, STOP BITS, FLOW CONTROL |

YOU WILL NOW SEE A MESSAGE "PLEASE WAIT COMPILING STAGE 1" CONTINUE TO NEXT PROGRAM MENU QUESTIONS.

NOTES:

1) ASSIGNED DTMF CODES:

| | |
|---|---|
| ACTIVATE CROSSING (MAIN 1 TRACK - 1T1) | 98911# |
| DE-ACTIVATE CROSSING (MAIN 1 TRACK - 1T1) | 98910* |
| ACTIVATE CROSSING (Y TRACK - 1T2) | 98921# |
| DE-ACTIVATE CROSSING (Y TRACK - 1T2) | 98920* |
| ACTIVATE CROSSING (MAINTENANCE) | 98971# |
| DE-ACTIVATE CROSSING (MAINTENANCE) | 98970* |

2) ADDITIONAL OPTIONS: DUAL CROSSING, EXTERNAL ENTRANCE GATE CONTROLLERS.

STAGE 2

| QUESTION | PROGRAM | SELECTION 1 (MINIMUM) | SELECTION 2 (MAXIMUM) | CONDITION FOR MENU DISPLAY |
|---|---|---|---|---|
| RESET NAMES / MODULES ? | NO | YES | NO | ALWAYS |
| CROSSING CONFIGURATION ? | NORMAL | NORMAL | SPLIT GATE (NOTE 2) | ALWAYS |
| AND1 USED AS XR? | YES | NO | YES | ALWAYS |
| AND2 USED AS XR? | NO | NO | YES | ALWAYS |
| AND3 USED AS XR? | NO | NO | YES | ALWAYS |
| AND4 USED AS XR? | NO | NO | YES | ALWAYS |
| AND5 USED AS XR? | NO | NO | YES | ALWAYS |
| AND6 USED AS XR? | NO | NO | YES | ALWAYS |
| AND7 USED AS XR? | NO | NO | YES | ALWAYS |
| AND8 USED AS XR? | NO | NO | YES | ALWAYS |
| XR CONTROLLED BY FOREIGN RR? | NO | AND1 | AND8 | CROSSING CONFIGURATION = SPIT GATE |
| ENTRANCE GATES ? | 2 | 0 | 8 | ALWAYS |
| GATE CONTROLLED BY FOREIGN RR? | NONE | NONE | TSS4 | CROSSING CONFIGURATION = SPIT GATE |
| GATE DESCENT TIME (SECONDS) | 11 | 7 | 20 | GATES > 0 |
| GATE POSITION FAIL TIME (SECONDS) ? | 17 | 10 | 60 | GATES > 0 |
| BATTERY BANKS ? | 3 | 1 | 3 | ALWAYS |
| BATT MON USED ? | YES | NO | YES | ALWAYS |
| INTERNAL CROSSING CONTROLLERS ? | 2 | 0 | 2 | ALWAYS |
| EXTERNAL CROSSING CONTROLLERS ? | 0 | 0 | 2 | CROSSING CONTROLLER = YES |
| ALLOW DTMF CONTROL ? | YES | NO | YES | ALWAYS |
| COUNTRY | US | CANADA | US | ALLOW DTMF CONTROL = YES |
| DTMF CONTROL WITH PREMPTION ? | NO | NO | YES | ALLOW DTMF CONTROL = YES |
| POK ANNOUNCEMENT TO VHF ? | NO | NO | YES | ALLOW DTMF CONTROL = YES |
| VHF VOICE CHANNEL ? | 1 | 1 | 8 | ALLOW DTMF CONTROL = YES |
| VHF DATA CHANNEL ? | 1 | 1 | 8 | ALLOW DTMF CONTROL = YES |
| DIGIT #1 ? | 9 | 0 | 9 | ALLOW DTMF CONTROL = YES |
| DIGIT #2 ? | 8 | 0 | 9 | ALLOW DTMF CONTROL = YES |
| DIGIT #3 ? | 9 | 0 | 9 | ALLOW DTMF CONTROL = YES |
| DIGIT #4 ? | N/A | 0 | 9 | ALLOW DTMF CONTROL = YES |
| DIGIT #5 ? | N/A | 0 | 9 | ALLOW DTMF CONTROL = YES |
| TIME-OUT FOR DTMF REQUEST #1 ? | 180 | 0 | 240 | ALLOW DTMF CONTROL = YES |
| TIME-OUT FOR DTMF REQUEST #2 ? | 180 | 0 | 240 | ALLOW DTMF CONTROL = YES |
| TIME-OUT FOR DTMF REQUEST #3 ? | 0 | 0 | 240 | ALLOW DTMF CONTROL = YES |
| TIME-OUT FOR DTMF REQUEST #4 ? | 0 | 0 | 240 | ALLOW DTMF CONTROL = YES |

STAGE 2 CONT'D

| QUESTION | PROGRAM | SELECTION 1 (MINIMUM) | SELECTION 2 (MAXIMUM) | CONDITION FOR MENU DISPLAY |
|---|---|---|---|---|
| TIME-OUT FOR DTMF REQUEST #5 ? | 0 | 0 | 240 | ALLOW DTMF CONTROL = YES |
| TIME-OUT FOR DTMF REQUEST #6 ? | 0 | 0 | 240 | ALLOW DTMF CONTROL = YES |
| TIME-OUT FOR DTMF REQUEST #7 ? | 180 | 0 | 240 | ALLOW DTMF CONTROL = YES |
| ISLAND RELEASE DTMF REQUEST #1 ? | 1 | 0 | 6 | TIME-OUT FOR DTMF REQUEST #1 > 0 |
| ISLAND RELEASE DTMF REQUEST #2 ? | 2 | 0 | 6 | TIME-OUT FOR DTMF REQUEST #2 > 0 |
| ISLAND RELEASE DTMF REQUEST #3 ? | 0 | 0 | 6 | TIME-OUT FOR DTMF REQUEST #3 > 0 |
| ISLAND RELEASE DTMF REQUEST #4 ? | 0 | 0 | 6 | TIME-OUT FOR DTMF REQUEST #4 > 0 |
| ISLAND RELEASE DTMF REQUEST #5 ? | 0 | 0 | 6 | TIME-OUT FOR DTMF REQUEST #5 > 0 |
| ISLAND RELEASE DTMF REQUEST #6 ? | 0 | 0 | 6 | TIME-OUT FOR DTMF REQUEST #6 > 0 |
| ISLAND RELEASE DTMF REQUEST #7 ? | 0 | 0 | 6 | TIME-OUT FOR DTMF REQUEST #7 > 0 |
| ILOD MODULES ? | 2 | 0 | 4 | ALWAYS |
| ANY LED BULBS USED ? | YES | NO | YES | ILOD MODULES > 0 |
| AUTO INSPECTION ? | NO | YES | NO | ALWAYS |
| BELL SENSORS ? | 1 | 0 | 8 | ALWAYS |
| BELL SENSORS TSS1 ? | YES | NO | YES | BELL SENSORS > 0 |
| BELL SENSORS TSS2 ? | N/A | NO | YES | BELL SENSORS > 0 |
| BELL SENSORS TSS3 ? | N/A | NO | YES | BELL SENSORS > 0 |
| BELL SENSORS TSS4 ? | N/A | NO | YES | BELL SENSORS > 0 |
| BELL SENSORS TSS5 ? | N/A | NO | YES | BELL SENSORS > 0 |
| BELL SENSORS TSS6 ? | N/A | NO | YES | BELL SENSORS > 0 |
| BELL SENSORS TSS7 ? | N/A | NO | YES | BELL SENSORS > 0 |
| BELL SENSORS TSS8 ? | N/A | NO | YES | BELL SENSORS > 0 |
| BELL ON ? | GATES LOWERING | GATES LOWERING | | BELL SENSORS > 0 |
| | | GATES MOVING | | |
| | | ALWAYS | | |
| BATTERY PERCENT FOR ALARM ? | 85 | 0 | 100 | ALWAYS |
| GFT'S ? | YES | YES | NO | ALWAYS |
| BATTERIES ON GFT1 ? | 2 | 1 | 2 | GFT'S = YES |
| GATE UP SOURCE ? | GP | TSS | GP | GATE > 0 |
| GATE DOWN SOURCE ? | GD | TIP , TSS | GD | GATES > 0 |
| USE CELL MODEM NON-CRITICAL FEATURE ? | NO | NO | YES | ALWAYS |
| FULL APPROACH MOVE ALARMS ? | ACTIVATE | ACTIVATE | | ALWAYS |
| | | DO NOT ACTIVATE | | |

YOU WILL NOW SEE A MESSAGE "PLEASE WAIT COMPILING STAGE 2" CONTINUE TO NEXT PROGRAM MENU QUESTIONS.

STAGE 3

| PROGRAM MENU QUESTIONS | |
|---|---|
| EDIT DIGITAL INPUTS | NO |
| EDIT BATTERIES | NO |
| EDIT RELAYS | NO |
| EDIT TEST LEDS | NO |
| EDIT ILOD SENSORS | NO |
| EDIT VHF SETTINGS | NO |
| GCP4K ATCS SUBNODE? | 16 |

SAVE CONFIGURATION

chi-081.24-05.dgn
16-JUN-2015

SIEMENS INDUSTRY INC

| | | | |
|---|---|---|---|
| DES.: TMF | DATE: 25/06/14 | JOB NO.: WCNA10382 | |
| CKD.: MRB | ISSUE DATE: N/A | EST. NO.: XP-7259 | |
| DRN.: TMF | PLAN NO.: N/A | SHEET 5 OF 34 | |
| P TIME: 11:24 | P DATE: 16-JUN-2015 | CAD ID.: CHI-081.24-05 | |

SII 25 JUN 2014

PROPOSED
DESIGN NO. 14-0068
RED-IN YELLOW-OUT

AS INSTALLED
DATE _____
BY _____
(PRINT NAME)

SEARIII EXECUTIVE 9V725 REV. A01U, SEARIII APPLICATION 9VC45 REV. A01A

| PROPOSED D | PROPOSED M | PROPOSED Y | REVISIONS | D | C | COMPLETED D | COMPLETED M | COMPLETED Y | C |
|---|---|---|---|---|---|---|---|---|---|
| | | | | | | | | | |

REGION SOUTHERN
SUB. CHICAGO 340

SIGNALS AND COMMUNICATIONS HOMEWOOD
25 JUNE 2014
DES. TMF
CH. MRB

GCP 4000/SEAR III
SETUP & PROGRAM
GILMAN, IL

DENT STREET

CHI-081.24-05

DOT# 288 989V

SIEMENS INDUSTRY INC
LOUISVILLE DIVISION, LOUISVILLE, KY

| REVISIONS | | | |
|---|---|---|---|
| NO. | DATE | BY | DESCRIPTION | APP. BY |
| 1 | | | | |
| 2 | | | | |
| 3 | | | | |
| 4 | | | | |
| 5 | | | | |

GCP 4000
CALIBRATION HISTORY

INITIAL SET UP BY: _____ DATE: _____

| | | APPROACH DISTANCE CALIBRATION | | | | | | | | | | LINEARIZATION CALIBRATION | |
|---|---|---|---|---|---|---|---|---|---|---|---|---|---|
| | | EZ/EX VALUES (TRACK UNOCCUPIED) | | | | HARD WIRE SHUNT AT TERMINATION SHUNT | | | | COMPUTED APPROACH DISTANCE | | LINEARIZATION STEP VALUE | |
| | | EZ | | EX | | EZ | | EX | | | | | |
| | | NRML | STBY | NRML | STBY | NRML | STBY | NRML | STBY | NRML | STBY | NRML | STBY |
| NORTH | TRACK 1 | | | | | | | | | | | | |
| SOUTH | TRACK 1 | | | | | | | | | | | | |
| NORTH | TRACK 2 | | | | | | | | | | | | |
| SOUTH | TRACK 2 | | | | | | | | | | | | |
| NORTH | TRACK 3 | N/A | N/A | N/A | N/A | N/A | N/A | N/A | N/A | N/A | N/A | N/A | N/A |
| SOUTH | TRACK 3 | | | | | | | | | | | | |
| NORTH | TRACK 4 | N/A | N/A | N/A | N/A | N/A | N/A | N/A | N/A | N/A | N/A | N/A | N/A |
| SOUTH | TRACK 4 | | | | | | | | | | | | |
| NORTH | TRACK 5 | N/A | N/A | N/A | N/A | N/A | N/A | N/A | N/A | N/A | N/A | N/A | N/A |
| SOUTH | TRACK 5 | | | | | | | | | | | | |

GCP 4000
CALIBRATION HISTORY

INITIAL SET UP BY: _____ DATE: _____

| | | APPROACH DISTANCE CALIBRATION | | | | | | | | | | LINEARIZATION CALIBRATION | |
|---|---|---|---|---|---|---|---|---|---|---|---|---|---|
| | | EZ/EX VALUES (TRACK UNOCCUPIED) | | | | HARD WIRE SHUNT AT TERMINATION SHUNT | | | | COMPUTED APPROACH DISTANCE | | LINEARIZATION STEP VALUE | |
| | | EZ | | EX | | EZ | | EX | | | | | |
| | | NRML | STBY | NRML | STBY | NRML | STBY | NRML | STBY | NRML | STBY | NRML | STBY |
| NORTH | TRACK 1 | | | | | | | | | | | | |
| SOUTH | TRACK 1 | | | | | | | | | | | | |
| NORTH | TRACK 2 | | | | | | | | | | | | |
| SOUTH | TRACK 2 | | | | | | | | | | | | |
| NORTH | TRACK 3 | N/A | N/A | N/A | N/A | N/A | N/A | N/A | N/A | N/A | N/A | N/A | N/A |
| SOUTH | TRACK 3 | | | | | | | | | | | | |
| NORTH | TRACK 4 | N/A | N/A | N/A | N/A | N/A | N/A | N/A | N/A | N/A | N/A | N/A | N/A |
| SOUTH | TRACK 4 | | | | | | | | | | | | |
| NORTH | TRACK 5 | N/A | N/A | N/A | N/A | N/A | N/A | N/A | N/A | N/A | N/A | N/A | N/A |
| SOUTH | TRACK 5 | | | | | | | | | | | | |

GCP 4000
CALIBRATION HISTORY

INITIAL SET UP BY: _____ DATE: _____

| | | APPROACH DISTANCE CALIBRATION | | | | | | | | | | LINEARIZATION CALIBRATION | |
|---|---|---|---|---|---|---|---|---|---|---|---|---|---|
| | | EZ/EX VALUES (TRACK UNOCCUPIED) | | | | HARD WIRE SHUNT AT TERMINATION SHUNT | | | | COMPUTED APPROACH DISTANCE | | LINEARIZATION STEP VALUE | |
| | | EZ | | EX | | EZ | | EX | | | | | |
| | | NRML | STBY | NRML | STBY | NRML | STBY | NRML | STBY | NRML | STBY | NRML | STBY |
| NORTH | TRACK 1 | | | | | | | | | | | | |
| SOUTH | TRACK 1 | | | | | | | | | | | | |
| NORTH | TRACK 2 | | | | | | | | | | | | |
| SOUTH | TRACK 2 | | | | | | | | | | | | |
| NORTH | TRACK 3 | N/A | N/A | N/A | N/A | N/A | N/A | N/A | N/A | N/A | N/A | N/A | N/A |
| SOUTH | TRACK 3 | | | | | | | | | | | | |
| NORTH | TRACK 4 | N/A | N/A | N/A | N/A | N/A | N/A | N/A | N/A | N/A | N/A | N/A | N/A |
| SOUTH | TRACK 4 | | | | | | | | | | | | |
| NORTH | TRACK 5 | N/A | N/A | N/A | N/A | N/A | N/A | N/A | N/A | N/A | N/A | N/A | N/A |
| SOUTH | TRACK 5 | | | | | | | | | | | | |

SII 25 JUN 2014

PROPOSED
DESIGN NO. 14-0068
RED-IN YELLOW-OUT

AS INSTALLED
DATE _____
BY _____
(PRINT NAME)

| PROPOSED | | | REVISIONS | D | C | COMPLETED | | | C |
|---|---|---|---|---|---|---|---|---|---|
| D | M | Y | | | | D | M | Y | |

REGION SOUTHERN
SUB. CHICAGO 340

SIGNALS AND COMMUNICATIONS HOMEWOOD
25 JUNE 2014
DES. TMF
CH. MRB

GCP 4000
CALIBRATION HISTORY
GILMAN, IL
DENT STREET

CHI-081.24-06

DOT# 288 989V

| SIEMENS INDUSTRY INC | | |
|---|---|---|
| DES.: TMF | DATE: 25/06/14 | JOB NO.: WCNA10382 |
| CKD.: MRB | ISSUE DATE: N/A | EST. NO.: XP-7259 |
| DRN.: TMF | PLAN NO.: N/A | SHEET 6 OF 34 |
| P. TIME: 11:24 | P. DATE: 16-JUN-2015 | CAD ID.: CHI-081.24-06 |

SIEMENS INDUSTRY INC
LOUISVILLE DIVISION, LOUISVILLE, KY

chi-081.24-06.dgn
16-JUN-2015

| REVISIONS | | | | |
|---|---|---|---|---|
| NO. | DATE | BY | DESCRIPTION | APP. BY |
| 1 | | | | |
| 2 | | | | |
| 3 | | | | |
| 4 | | | | |
| 5 | | | | |

chi-081.24-07.dgn
16-JUN-2015

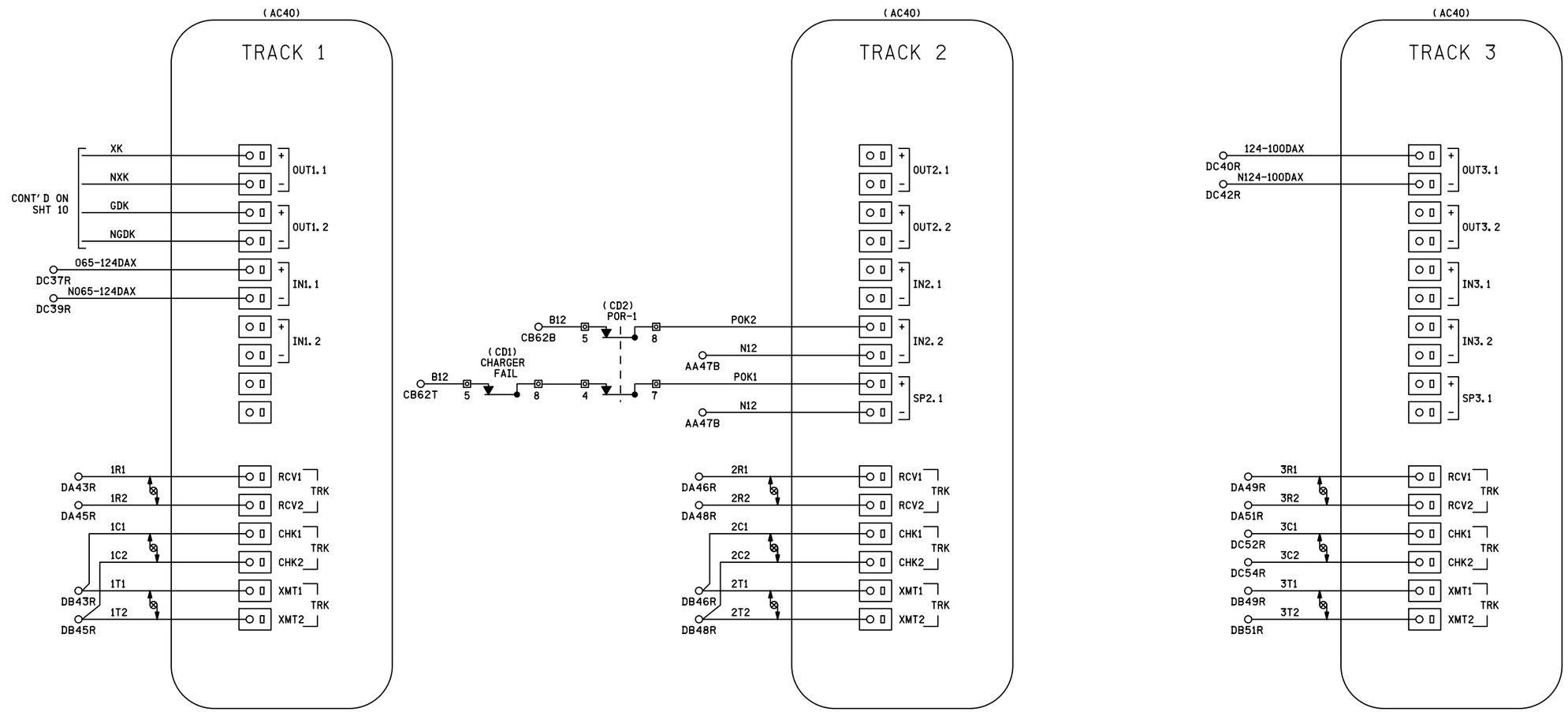


NOTES

1) ALL WIRING #16 AWG UNLESS OTHERWISE NOTED

DENOTES TWISTED PAIR

SII 25 JUN 2014

PROPOSED
DESIGN NO. 14-0068
RED-IN YELLOW-OUT

AS INSTALLED
DATE _____
BY _____
(PRINT NAME)

| PROPOSED | | | REVISIONS | D | C | COMPLETED | | | C |
|---|---|---|---|---|---|---|---|---|---|
| D | M | Y | | | | D | M | Y | |
| | | | | | | | | | |

REGION SOUTHERN
SUB. CHICAGO 340

SIGNALS AND COMMUNICATIONS HOMEWOOD
25 JUNE 2014

DES. TMF
CH. MRB

GCP 4000
TRACK 1, 2 & 3 MODULE CONNECTIONS
GILMAN, IL

DENT STREET

CHI-081.24-07

DOT# 288 989V

| SIEMENS INDUSTRY INC | | | |
|---|---|---|---|
| DES. : TMF | DATE: 25/06/14 | JOB NO. : WCNA10382 | |
| CKD. : MRB | ISSUE DATE: N/A | EST. NO. : XP-7259 | |
| DRN. : TMF | PLAN NO. : N/A | SHEET 7 OF 34 | |
| P TIME: 11:24 | P DATE: 16-JUN-2015 | CAD ID. : CHI-081.24-07 | |

SIEMENS INDUSTRY INC
LOUISVILLE DIVISION, LOUISVILLE, KY

| REVISIONS | | | | |
|---|---|---|---|---|
| NO. | DATE | BY | DESCRIPTION | APP. BY |
| 1 | | | | |
| 2 | | | | |
| 3 | | | | |
| 4 | | | | |
| 5 | | | | |

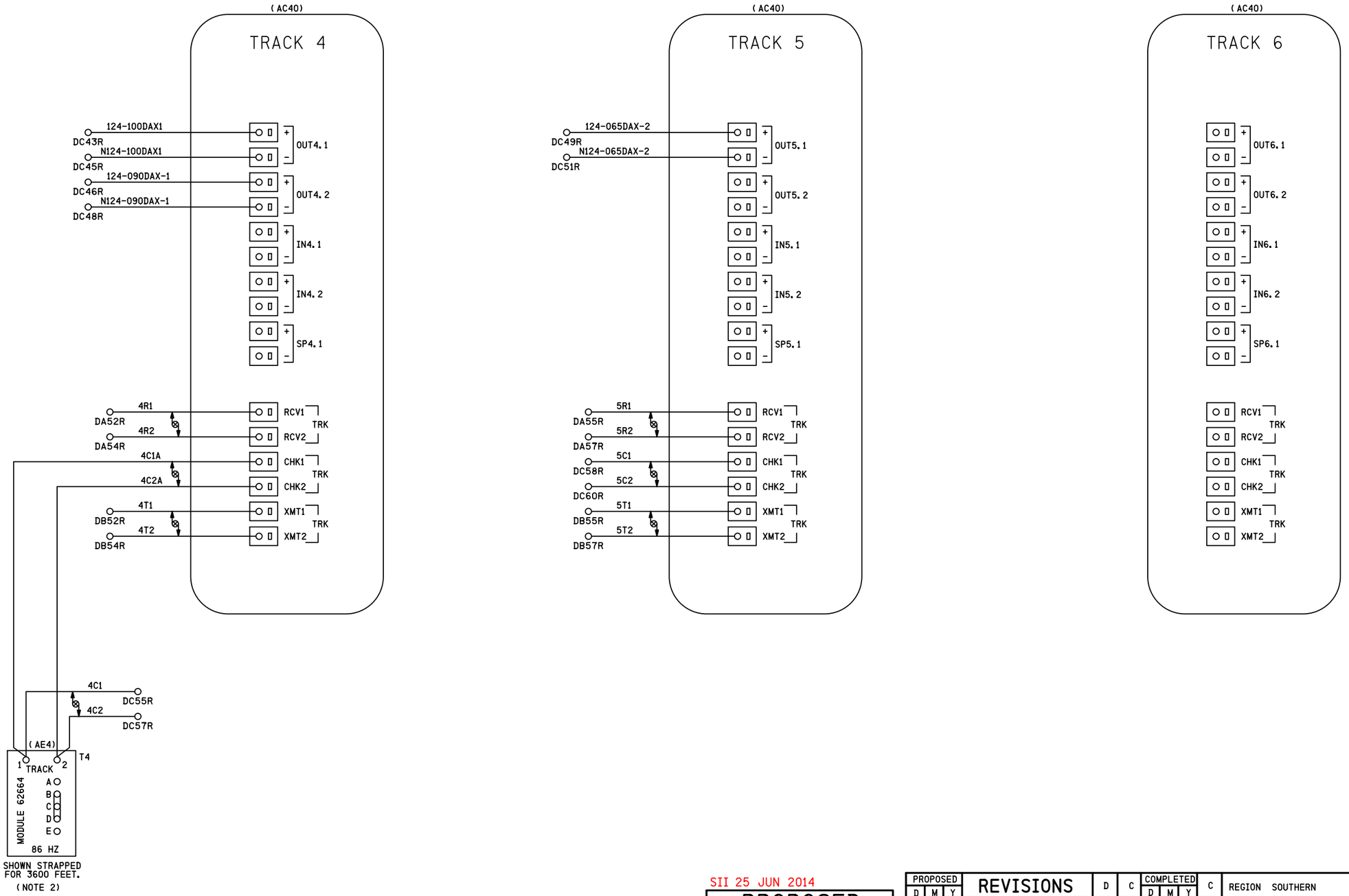


NOTES

1) ALL WIRING #16 AWG UNLESS OTHERWISE NOTED
2) SET BI-DIRECTIONAL SIMULATOR COUPLER TO THE SAME LENGTH OR SLIGHTLY LONGER (BUT NOT EXCEEDING 10%) OF THE ACTUAL APPROACH CIRCUIT LENGTH. (REFER TO MODEL 4000 GCP INSTRUCTION/INSTALLATION MANUAL)

DENOTES TWISTED PAIR

SII 25 JUN 2014

PROPOSED
DESIGN NO. 14-0068
RED-IN YELLOW-OUT

AS INSTALLED
DATE _____
BY _____
(PRINT NAME)

| PROPOSED D | M | Y | REVISIONS | D | C | COMPLETED D | M | Y | C |
|---|---|---|---|---|---|---|---|---|---|
| | | | | | | | | | |

REGION SOUTHERN
SUB. CHICAGO 340

SIGNALS AND COMMUNICATIONS HOMEWOOD
25 JUNE 2014
DES. TMF
CH. MRB

GCP 4000
TRACK 4, 5 & 6 MODULE CONNECTIONS
GILMAN, IL
DENT STREET

CHI-081.24-08

DOT# 288 989V

SIEMENS INDUSTRY INC

| | | | |
|---|---|---|---|
| DES.: TMF | DATE: 25/06/14 | JOB NO.: WCNA10382 | |
| CKD.: MRB | ISSUE DATE: N/A | EST. NO.: XP-7259 | |
| DRN.: TMF | PLAN NO.: N/A | SHEET 8 OF 34 | |
| P TIME: 11:24 | P DATE: 16-JUN-2015 | CAD ID.: CHI-081.24-08 | |

chi-081.24-08.dgn
16-JUN-2015

SIEMENS INDUSTRY INC
LOUISVILLE DIVISION, LOUISVILLE, KY

| REVISIONS | | | | |
|---|---|---|---|---|
| NO. | DATE | BY | DESCRIPTION | APP. BY |
| 1 | | | | |
| 2 | | | | |
| 3 | | | | |
| 4 | | | | |
| 5 | | | | |

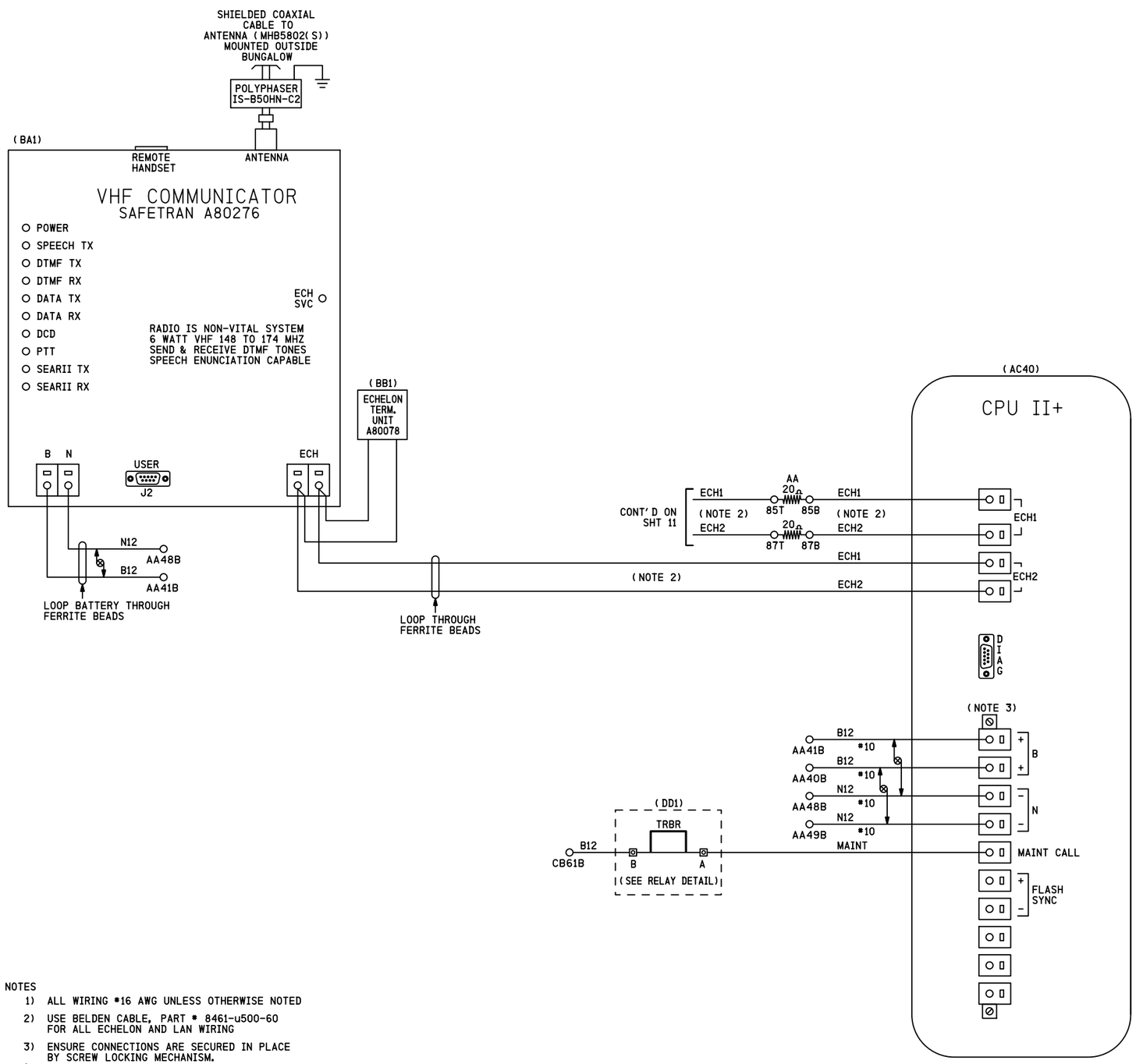


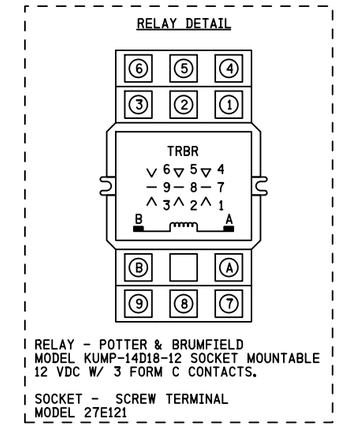


PART OF POWER OFF INDICATOR REPEATER RELAY JUNCTION BOX

NOTES

1) ALL WIRING #16 AWG UNLESS OTHERWISE NOTED
2) USE BELDEN CABLE, PART # 8461-u500-60 FOR ALL ECHELON AND LAN WIRING
3) ENSURE CONNECTIONS ARE SECURED IN PLACE BY SCREW LOCKING MECHANISM.

DENOTES TWISTED PAIR

SII 25 JUN 2014

PROPOSED
DESIGN NO. 14-0068
RED-IN YELLOW-OUT

AS INSTALLED
DATE _____
BY _____
(PRINT NAME)

| PROPOSED D | M | Y | REVISIONS | D | C | COMPLETED D | M | Y | C |
|---|---|---|---|---|---|---|---|---|---|
| | | | | | | | | | |

REGION SOUTHERN
SUB. CHICAGO 340

SIGNALS AND COMMUNICATIONS HOMEWOOD
25 JUNE 2014
DES. TMF
CH. MRB

GCP 4000
CPUII+ & VHF COMMUNICATOR
GILMAN, IL
DENT STREET

CHI-081.24-09

DOT# 288 989V

chi-081.24-09.dgn
16-JUN-2015

| SIEMENS INDUSTRY INC | | | |
|---|---|---|---|
| DES.: TMF | DATE: 25/06/14 | JOB NO.: WCNA10382 | |
| CKD.: MRB | ISSUE DATE: N/A | EST. NO.: XP-7259 | |
| DRN.: TMF | PLAN NO.: N/A | SHEET 9 OF 34 | |
| P. TIME: 11:24 | P. DATE: 16-JUN-2015 | CAD ID.: CHI-081.24-09 | |

SIEMENS INDUSTRY INC
LOUISVILLE DIVISION, LOUISVILLE, KY

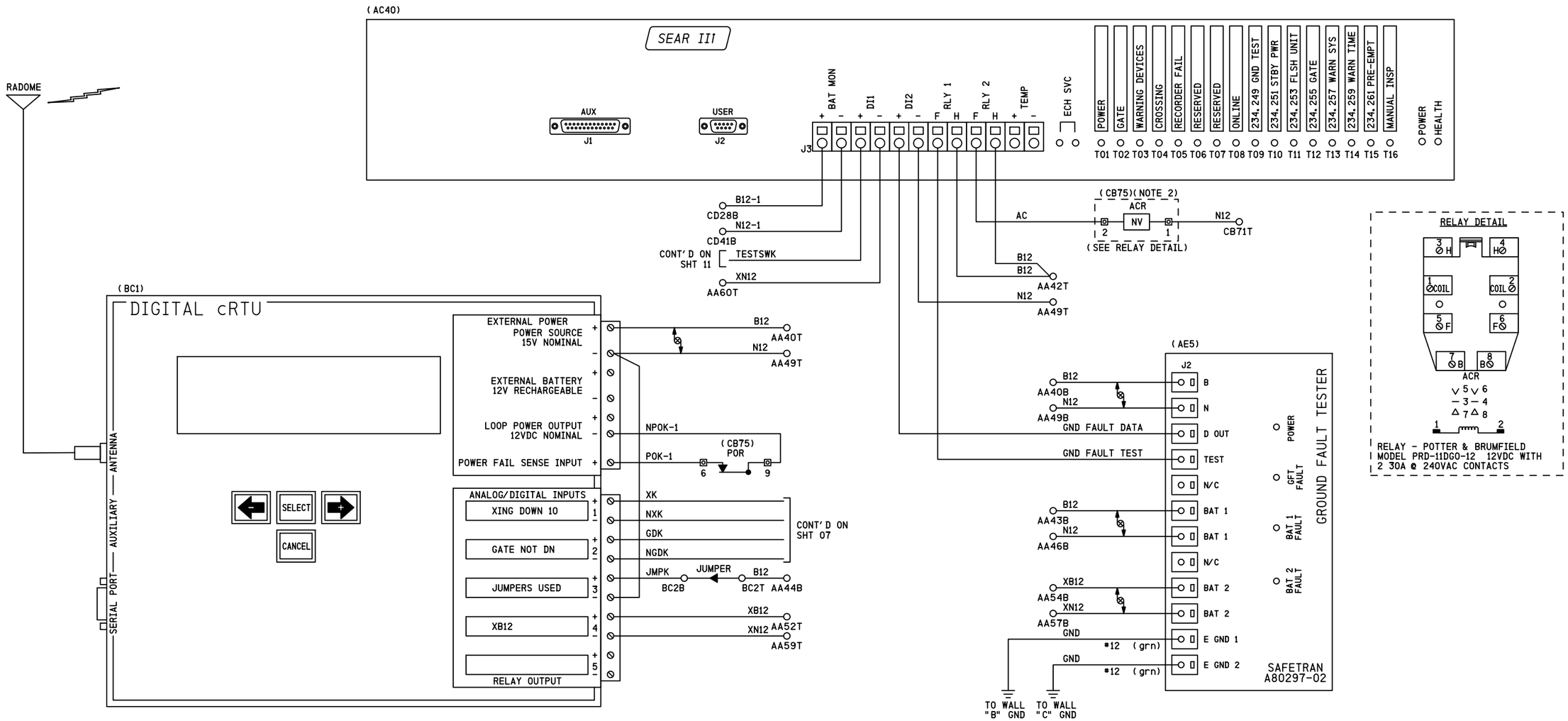


| | |
|---|---|
| CONFIGKEY: | 30 |
| MODEL: | C06C/2ANA V2.3 |
| SERIAL #: | |
| SITE IDENTIFIER: | DOT# 288 989V |

* FIELD TO PROVIDE SERIAL *

| | LOW ALARM | RETURN | HIGH ALARM | RETURN |
|---|---|---|---|---|
| B12 | 11.6 | 12.6 | 15.6 | 14.6 |
| XB12 | 13.8 | 14.8 | 17.8 | 16.8 |

NOTES

1) ALL WIRING #16 AWG UNLESS OTHERWISE NOTED
2) PART OF SEARIII POWER CONTROL AND INDICATION RELAY JUNCTION BOX

⊗ DENOTES TWISTED PAIR

SII 25 JUN 2014

PROPOSED
DESIGN NO. 14-0068
RED-IN YELLOW-OUT

AS INSTALLED
DATE _____
BY _____
(PRINT NAME)

| PROPOSED D | M | Y | REVISIONS | D | C | COMPLETED D | M | Y | C |
|---|---|---|---|---|---|---|---|---|---|
| | | | | | | | | | |

REGION SOUTHERN
SUB. CHICAGO 340

SIGNALS AND COMMUNICATIONS HOMEWOOD
25 JUNE 2014
DES. TMF
CH. MRB

GCP 4000
SEAR III WITH GFT & CRTU
GILMAN, IL
DENT STREET

CHI-081.24-10

DOT# 288 989V

SIEMENS INDUSTRY INC
LOUISVILLE DIVISION, LOUISVILLE, KY

SIEMENS INDUSTRY INC

| | | | |
|---|---|---|---|
| DES.: TMF | DATE: 25/06/14 | JOB NO.: WCNA10382 | |
| CKD.: MRB | ISSUE DATE: N/A | EST. NO.: XP-7259 | |
| DRN.: TMF | PLAN NO.: N/A | SHEET 10 OF 34 | |
| P TIME: 11:24 | P DATE: 16-JUN-2015 | CAD ID.: CHI-081.24-10 | |

| REVISIONS | | | | |
|---|---|---|---|---|
| NO. | DATE | BY | DESCRIPTION | APP. BY |
| 1 | | | | |
| 2 | | | | |
| 3 | | | | |
| 4 | | | | |
| 5 | | | | |

chi-081.24-10.dgn
16-JUN-2015