REVISIONS				
NO.	DATE	BY	DESCRIPTION	APP. BY
1				
2				
3				
4				
5				

CONT'D ON
SHEET 03

```
ISLAND:  track 1
Track 1 : IslFrequency = 5.9 kHz (Field)
Track 1 : Pickup Delay (2s +) = 0 sec (OCCN)
Track 1 : IslEnable IP Used = No (OCCN)

ISLAND:  track 3
Track 3 : IslFrequency = 10.0 kHz (Field)
Track 3 : Pickup Delay (2s +) = 0 sec (OCCN)
Track 3 : IslEnable IP Used = No (OCCN)

ISLAND:  track 5
IslEnable Pickup Delay = 4 sec (OCCN)

AND:  track Anding
AND 1 XR Used = Yes (OCCN)
AND 2 Used = Yes (OCCN)
AND 3 Used = No (OCCN)
AND 4 Used = No (OCCN)
AND 5 Used = No (OCCN)
AND 6 Used = No (OCCN)
AND 7 Used = No (OCCN)
AND 8 Used = No (OCCN)

AND:  AND 1 XR
AND 1 XR Track 1 = Prime (OCCN)
AND 1 XR Track 2 = Prime (OCCN)
AND 1 XR Track 3 = Prime (OCCN)
AND 1 XR Track 4 = Prime (OCCN)
AND 1 XR Track 5 = Prime (OCCN)
AND 1 XR Track 6 = Prime (OCCN)
AND 1 Enable Used = Yes (OCCN)
And 1 Enable Pickup = 2 sec (OCCN)
AND 1 Enable Drop = 0 sec (OCCN)
AND 1 Wrap Used = No (OCCN)

AND:  AND 2
AND 2 Track 1 = Not Used (OCCN)
AND 2 Track 2 = Not Used (OCCN)
AND 2 Track 3 = Not Used (OCCN)
AND 2 Track 4 = Not Used (OCCN)
AND 2 Track 5 = Not Used (OCCN)
AND 2 Track 6 = Not Used (OCCN)
AND 2 Enable Used = Yes (OCCN)
AND 2 Enable Pickup = 0 sec (OCCN)
AND 2 Enable Drop = 0 sec (OCCN)
AND 2 Wrap Used = No (OCCN)

ADVANCED:  MS restart
MS/GCP Restart Used = No (OCCN)

ADVANCED:  out of service
OOS Control = OOS IPs (OCCN)

ADVANCED:  out of service 2
T1 OOS Control = OOS Input 1 (OCCN)
T2 OOS Control = OOS Input 1 (OCCN)
T3 OOS Control = OOS Input 2 (OCCN)
T4 OOS Control = OOS Input 2 (OCCN)
T5 OOS Control = OOS Input 3 (OCCN)
T6 OOS Control = OOS Input 3 (OCCN)
T1 OOS Controls = GCP and Island (OCCN)
T2 OOS Controls = GCP Only (OCCN)
T3 OOS Controls = GCP and Island (OCCN)
T4 OOS Controls = GCP Only (OCCN)
T5 OOS Controls = GCP and Island (OCCN)
T6 OOS Controls = GCP Only (OCCN)

ADVANCED:  track wrap circuits
Wrap LOS Timer = 5 sec (OCCN)
Track 1 Wrap Used = No (OCCN)
Track 2 Wrap Used = No (OCCN)
Track 3 Wrap Used = No (OCCN)
Track 4 Wrap Used = No (OCCN)
Track 5 Wrap Used = No (OCCN)
Track 6 Wrap Used = No (OCCN)

ADVANCED:  trk 1 overrides
Track 1 : All Predictors Override Used = No (OCCN)
Track 1 : Dax A Override Used = No (OCCN)
Track 1 : Dax B Override Used = No (OCCN)

ADVANCED:  trk 2 overrides
Track 2 : All Predictors Override Used = No (OCCN)
Track 2 : Dax A Override Used = No (OCCN)

ADVANCED:  trk 3 overrides
Track 3 : All Predictors Override Used = No (OCCN)
Track 3 : Dax A Override Used = No (OCCN)

ADVANCED:  trk 4 overrides
Track 4 : All Predictors Override Used = No (OCCN)

ADVANCED:  trk 5 overrides
Track 5 : All Predictors Override Used = No (OCCN)

ADVANCED:  trk 6 overrides
Track 6 : All Predictors Override Used = No (OCCN)

ADVANCED:  OR logic
OR 1 Used = No (OCCN)
OR 2 Used = No (OCCN)
OR 3 Used = No (OCCN)
OR 4 Used = No (OCCN)

ADVANCED:  Internal I/O 1
Pass Thrus = Yes (OCCN)
Int.1 Sets = AND 2 Enable (OCCN)
Int.1 Set by = Passthru State 1 (OCCN)
Int.2 Sets = AND 2 Enable (OCCN)
Int.2 Set by = Passthru State 2 (OCCN)
Int.3 Sets = GD 1.1 (OCCN)
Int.3 Set by = Passthru State 1 (OCCN)
Int.4 Sets = GD 2.1 (OCCN)
Int.4 Set by = Passthru State 2 (OCCN)

ADVANCED:  Internal I/O 2
Int.5 Sets = Not Used (OCCN)
Int.5 Set by = Not Used (OCCN)
Int.6 Sets = Not Used (OCCN)
Int.6 Set by = Not Used (OCCN)
Int.7 Sets = Not Used (OCCN)
Int.7 Set by = Not Used (OCCN)
Int.8 Sets = Not Used (OCCN)
Int.8 Set by = Not Used (OCCN)

ADVANCED:  Internal I/O 3
Int.9 Sets = Not Used (OCCN)
Int.9 Set by = Not Used (OCCN)
Int.10 Sets = Not Used (OCCN)
Int.10 Set by = Not Used (OCCN)
Int.11 Sets = Not Used (OCCN)
Int.11 Set by = Not Used (OCCN)
Int.12 Sets = Not Used (OCCN)
Int.12 Set by = Not Used (OCCN)

ADVANCED:  Internal I/O 4
Int.13 Sets = Not Used (OCCN)
Int.13 Set by = Not Used (OCCN)
Int.14 Sets = Not Used (OCCN)
Int.14 Set by = Not Used (OCCN)
Int.15 Sets = Not Used (OCCN)
Int.15 Set by = Not Used (OCCN)
Int.16 Sets = Not Used (OCCN)
Int.16 Set by = Not Used (OCCN)

ADVANCED:  site options
Daylight Savings = On (Field)
Units = Standard (OCCN)
Maint Call Rpt IP Used = No (OCCN)
Emergency Activate IP = No (OCCN)
EZ/EX Logging = Change (Field)
EZ/EX Point Change = 3   (Field)

SSCC
Gates Used = Yes (OCCN)
SSCCI+2 GPs Coupled = Yes (OCCN)
Min Activation = 32 sec (OCCN)
Rmt Activation Cancel = 3 min (OCCN)
Bell On Gate Rising = No (OCCN)
Mute Bell On Gate Down = Yes (OCCN)
SSCCIV Controller Used = No (OCCN)

SSCC:  1
SSCC-1 Activation = AND 1 XR (OCCN)
SSCC-1 Gate Delay = 4 sec (OCCN)
SSCC-1 Number of GPs = 1 (OCCN)
SSCC-1 Number of GDs = 1 (OCCN)
SSCC 1 : Flash Rate = 55 (OCCN)
SSCC 1 : Low Battery Detection = No (Field)
SSCC 1 : Flash Sync = master (OCCN)
SSCC 1 : Invert Gate Output = No (OCCN)
SSCC 1 : Lamp Neutral Test = Off (Field)
Aux-1 Xng Ctrl Used = No (OCCN)

SSCC:  2
SSCC-2 Activation = AND 1 XR (OCCN)
SSCC-2 Gate Delay = 4 sec (OCCN)
SSCC-2 Number of GPs = 0 (OCCN)
SSCC-2 Number of GDs = 1 (OCCN)
SSCC 2 : Flash Rate = 55 (OCCN)
SSCC 2 : Low Battery Detection = No (Field)
SSCC 2 : Flash Sync = slave (OCCN)
SSCC 2 : Invert Gate Output = No (OCCN)
SSCC 2 : Lamp Neutral Test = Off (Field)
Aux-2 Xng Ctrl Used = No (OCCN)

OUTPUT:  assignment page 1
OUT 1.1 = T1 Dax A (OCCN)
OUT 1.2 = T1 Dax B (OCCN)
OUT 2.1 = T2 Dax A (OCCN)
OUT 2.2 = Not Used (OCCN)
OUT 3.1 = T3 Dax A (OCCN)
OUT 3.2 = Not Used (OCCN)

OUTPUT:  assignment page 2
OUT 4.1 = AND 1 XR (OCCN)
OUT 4.2 = AND 2 (OCCN)
OUT 5.1 = Not Used (OCCN)
OUT 5.2 = Not Used (OCCN)
OUT 6.1 = Not Used (OCCN)
OUT 6.2 = Not Used (OCCN)

INPUT:  assignment page 1
IN 1.1 = T1 Prime UAX (OCCN)
IN 1.2 = T1 Dax A Enable (OCCN)
IN 2.1 = T2 Prime UAX (OCCN)
IN 2.2 = T2 Dax A Enable (OCCN)
IN 3.1 = T3 Dax B Enable (OCCN)
IN 3.2 = T5 Enable (OCCN)   AND 1 XR Enable (OCCN)

INPUT:  assignment page 2
IN 4.1 = T4 Prime UAX (OCCN)
IN 4.2 = T2 Prime UAX (OCCN)
IN 5.1 = Out Of Service IP 3 (OCCN)
IN 5.2 = Not Used (OCCN)
IN 6.1 = Not Used (OCCN)
IN 6.2 = Not Used (OCCN)

IO:  assignment SSCC
OUT GC 1 = Gate Output 1 (OCCN)
OUT GC 2 = Gate Output 2 (OCCN)
IN 7.1 = AND 1 XR Enable (OCCN)
IN 7.2 = T1 Prime UAX (OCCN)
IN 7.3 = Not Used (OCCN)
IN 7.4 = Passthru State 1 (OCCN)
IN 7.5 = GP 1.1 (OCCN)
IN 8.1 = Out Of Service IP 1 (OCCN)
IN 8.2 = Out Of Service IP 2 (OCCN)
IN 8.3 = Not Used (OCCN)
IN 8.4 = Passthru State 2 (OCCN)
IN 8.5 = Not Used (OCCN)

SEAR
SEAR Subnode = 99   (OCCN)
DI 1 = Not Used (OCCN)
DI 2 = Gnd Flt Tester 1 (OCCN)
Rly 1 = Ground Fault Test (OCCN)
Rly 2 = AC Control (OCCN)

SEAR:  Inputs
SP 2.1 = Not Used (OCCN)
SP 3.1 = Not Used (OCCN)
SP 4.1 = POK 1 (OCCN)
SP 5.1 = POK 2 (OCCN)
SP 6.1 = Not Used (OCCN)

SEAR:  slot 1-4 Inputs
IN 4.2 = Not Used (OCCN)

SEAR:  Inputs slot 5
IN 5.1 = Not Used (OCCN)
IN 5.2 = Not Used (OCCN)

SEAR:  Inputs slot 6
IN 6.1 = Not Used (OCCN)
IN 6.2 = Not Used (OCCN)

SEAR:  slot 7-8 Inputs
IN 7.3 = TSS 1 (OCCN)
IN 8.3 = TSS 2 (OCCN)
IN 8.5 = General 2 (OCCN)

SITE:  programming
Radio Subnode = 1   (Field)
Field Password = Off (OCCN)
Low Battery Enabled = Off (Field)

Configuration Package File
--------------------------
Filename: chl-081.00.pac
```

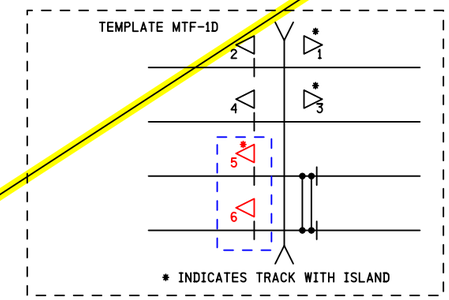

NOTES

1) DISTANCE(S) TO BE VERIFIED AT INSTALLATION
   INDICATE SELECTED PROGRAMMED VALUE IF DIFFERENT THAN SHOWN
   REFER TO 4000 GCP INSTRUCTION/INSTALLATION MANUAL
   FOR PROGRAMMING PARAMETERS

2) PROGRAM TEXT HIGHLIGHTED IN RED INDICATES 4000 PROGRAM
   MODIFICATIONS TO DEFAULT PROGRAM VALUES

3) EACH CONSTANT WARNING DEVICE SYSTEM TO BE PROGRAMMED TO
   CONVERT TO A MOTION SENSOR 300 FEET FROM EDGE OF ROAD
   TRAVELLED WAY
   SHUNT TRACK 300 FEET FROM EDGE OF ROAD TRAVELLED WAY
   AND NOTE "EZ" VALUE
   PROGRAM EACH SYSTEM WITH THE INDICATED "EZ" VALUE +2

4) VERIFY SET TIMER VALUE TO MATCH ACTUAL TRAIN MOVEMENT
   WITHIN THE CROSSING APPROACH CIRCUITS

OBSOLETE
08/01/15
DESIGN# 14-0069
SII

DENOTES PROPOSAL 14-0069
REVISION 08/01/15

SII 08 JAN 2015
SII 19 JUN 2014

PROPOSED
DESIGN NO. 14-0069
RED-IN YELLOW-OUT

AS INSTALLED
DATE _____
BY _____
(PRINT NAME)

PROPOSED D	PROPOSED M	PROPOSED Y	REVISIONS	D	C	COMPLETED D	COMPLETED M	COMPLETED Y	C
08	01	15	TRK CIRCUITS ADDED	NAD	MRB				

REGION SOUTHERN
SUB. CHICAGO 340
CN

SIGNALS AND COMMUNICATIONS
HOMEWOOD
19 JUNE 2014
DES. NDH
CH. MRB

GCP 4000
PROGRAM INFORMATION
GILMAN, IL
2ND STREET

CHI-081.00-04X

DOT# 288 987G

chl-081.00-04x.dgn
15-APR-2015

SIEMENS INDUSTRY INC			
DES. : NDH	DATE: 19/06/14	JOB NO. : JXXD03603	
CKD. : MRB	ISSUE DATE: N/A	EST. NO. :XP-7262	
DRN. : NDH	PLAN NO. :N/A	SHEET 4 OF 22	
P TIME:15:44	P DATE: 15-APR-2015	CAD ID. : CHI-081.00-04	

SIEMENS INDUSTRY INC
LOUISVILLE DIVISION, LOUISVILLE, KY

REVISIONS				
NO.	DATE	BY	DESCRIPTION	APP. BY
1				
2				
3				
4				
5				

TO CONFIGURE SEARII & SEARIII PRESS SITE SETUP KEY. USE ARROW KEYS TO MAKE SELECTION, PRESS ENTER AFTER SELECTION HAS BEEN MADE.

STAGE 1

PROGRAM MENU QUESTIONS	PROGRAM	OPTIONS/RANGE
DATE/TIME?	CURRENT DATE/TIME	CURRENT DATE/TIME
AUTOMATIC DST ADJUSTMENT?	YES	YES, NO
TIME ZONE?	CENTRAL	EASTERN, CENTRAL, MOUNTAIN, PACIFIC, ALASKA, HAWAII, ATLANTIC, SASKATCHEWAN, NEW FOUNLAND
SITE NAME?	2ND STREET	STREET NAME
MILE POST?	081.00	MILEAGE
DOT/CROSSING IS #?	288 987G	123456A
TESTER TYPE?	CROSSING	CROSSING, WAYSIDE
DATE FORMAT?	dd-mm-yyyy	mm-dd-yyyy, dd-mm-yyyy
TEMPERATURE FORMAT?	FAHRENHEIT	FAHRENHEIT, CELSIUS
INDICATE HOLD?	0	SECONDS
SITE TYPE?		NO COM, BULLHORN, DIALUP, NODE, COLLECTOR
SITE ATCS ADDRESS?		7.RRR.LLL.GGG.99.01
OFFICE ATCS ADDRESS?		2.RRR.NN.DDDD
PRIMARY HOP ADDR? (FOR NODE USE)		7.RRR.LLL.GGG.00.01
BACKUP HOP ADDR1? (FOR NODE USE)		7.RRR.LLL.GGG.00.01
BACKUP HOP ADDR2? (FOR NODE USE)		7.RRR.LLL.GGG.00.01
POLL ID? (FOR COLLECTOR USE)		1-99
MODE? (FOR COLLECTOR USE)		GEN/ATCS, GENISYS
WAMS/XID? (FOR COLLECTOR USE)		ENABLED, DISABLE
OFFICE COMM. DEVICE? (FOR COLLECTOR USE)		DIRECT (RS232) MCM (RS232) MCM (ECHELON) SREAD SPEC (ECHELON) DIAL MODEM (RS232) S200 RADIO (RS422)
OFFICE PHONE NUMBER? (FOR COLLECTOR USE)		PHONE NUMBER OF WAMS
INIT STRING? (FOR COLLECTOR USE)		OPTIONAL HAYES MODEM INITIALIZATION STRING
FIELD COMM. DEVICE? (FOR COLLECTOR USE)		VHF COMM. (ECHELON) VHF COMM. (RS232) SPREAD SPEC (ECHELON) SPREAD SPEC (RS232)
USER PORT? (FOR COLLECTOR USE)	57600, 8, N, 1, N	BAUD, DATA BITS, PARITY, STOP BITS, FLOW CONTROL
AUX PORT? (FOR COLLECTOR USE)	9600, 8, N, 1, N	BAUD, DATA BITS, PARITY, STOP BITS, FLOW CONTROL

YOU WILL NOW SEE A MESSAGE "PLEASE WAIT COMPILING STAGE 1" CONTINUE TO NEXT PROGRAM MENU QUESTIONS.

NOTES:

1) ASSIGNED DTMF CODES:

ACTIVATE CROSSING (MAIN TRACK - 1T1)	28898711#
DE-ACTIVATE CROSSING (MAIN TRACK - 1T1)	28898710#
ACTIVATE CROSSING (SIDING TRACK - 1T3)	28898731#
DE-ACTIVATE CROSSING (SIDING TRACK - 1T3)	28898730#
ACTIVATE CROSSING (SIDING TRACK - 1T4)	28898741#
DE-ACTIVATE CROSSING (SIDING TRACK - 1T4)	28898740#
ACTIVATE CROSSING (MAINTENANCE)	28898771#
DE-ACTIVATE CROSSING (MAINTENANCE)	28898770#

2) ADDITIONAL OPTIONS: DUAL CROSSING, EXTERNAL ENTRANCE GATE CONTROLLERS.

STAGE 2

QUESTION	PROGRAM	SELECTION 1 (MINIMUM)	SELECTION 2 (MAXIMUM)	CONDITION FOR MENU DISPLAY
RESET NAMES / MODULES ?	NO	YES	NO	ALWAYS
CROSSING CONFIGURATION ?	NORMAL	NORMAL	SPLIT GATE (NOTE 2)	ALWAYS
AND1 USED AS XR?	YES	NO	YES	ALWAYS
AND2 USED AS XR?	NO	NO	YES	ALWAYS
AND3 USED AS XR?	NO	NO	YES	ALWAYS
AND4 USED AS XR?	NO	NO	YES	ALWAYS
AND5 USED AS XR?	NO	NO	YES	ALWAYS
AND6 USED AS XR?	NO	NO	YES	ALWAYS
AND7 USED AS XR?	NO	NO	YES	ALWAYS
AND8 USED AS XR?	NO	NO	YES	ALWAYS
XR CONTROLLED BY FOREIGN RR?	NO	AND1	AND8	CROSSING CONFIGURATION = SPIT GATE
ENTRANCE GATES ?	2	0	8	ALWAYS
GATE CONTROLLED BY FOREIGN RR?	NONE	NONE	TSS4	CROSSING CONFIGURATION = SPIT GATE
GATE DESCENT TIME (SECONDS)	11	7	20	GATES > 0
GATE POSITION FAIL TIME (SECONDS) ?	17	10	60	GATES > 0
BATTERY BANKS ?	2	1	3	ALWAYS
BATT MON USED ?	NO	NO	YES	ALWAYS
INTERNAL CROSSING CONTROLLERS ?	2	0	2	ALWAYS
EXTERNAL CROSSING CONTROLLERS ?	0	0	2	CROSSING CONTROLLER = YES
ALLOW DTMF CONTROL ?	YES	NO	YES	ALWAYS
COUNTRY	US	CANADA	US	ALLOW DTMF CONTROL = YES
DTMF CONTROL WITH PREMPTION ?	NO	NO	YES	ALLOW DTMF CONTROL = YES
POK ANNOUNCEMENT TO VHF ?	NO	NO	YES	ALLOW DTMF CONTROL = YES
VHF VOICE CHANNEL ?	1	1	8	ALLOW DTMF CONTROL = YES
VHF DATA CHANNEL ?	1	1	8	ALLOW DTMF CONTROL = YES
DIGIT #1 ?	9	0	9	ALLOW DTMF CONTROL = YES
DIGIT #2 ?	8	0	9	ALLOW DTMF CONTROL = YES
DIGIT #3 ?	7	0	9	ALLOW DTMF CONTROL = YES
DIGIT #4 ?	N/A	0	9	ALLOW DTMF CONTROL = YES
DIGIT #5 ?	N/A	0	9	ALLOW DTMF CONTROL = YES
TIME-OUT FOR DTMF REQUEST #1 ?	180	0	240	ALLOW DTMF CONTROL = YES
TIME-OUT FOR DTMF REQUEST #2 ?	0	0	240	ALLOW DTMF CONTROL = YES
TIME-OUT FOR DTMF REQUEST #3 ?	180	0	240	ALLOW DTMF CONTROL = YES
TIME-OUT FOR DTMF REQUEST #4 ?	0	0	240	ALLOW DTMF CONTROL = YES

STAGE 2 CONT'D

QUESTION	PROGRAM	SELECTION 1 (MINIMUM)	SELECTION 2 (MAXIMUM)	CONDITION FOR MENU DISPLAY
TIME-OUT FOR DTMF REQUEST #5 ?	0	0	240	ALLOW DTMF CONTROL = YES
TIME-OUT FOR DTMF REQUEST #6 ?	0	0	240	ALLOW DTMF CONTROL = YES
TIME-OUT FOR DTMF REQUEST #7 ?	180	0	240	ALLOW DTMF CONTROL = YES
ISLAND RELEASE DTMF REQUEST #1 ?	1	0	6	TIME-OUT FOR DTMF REQUEST #1 > 0
ISLAND RELEASE DTMF REQUEST #2 ?	0	0	6	TIME-OUT FOR DTMF REQUEST #2 > 0
ISLAND RELEASE DTMF REQUEST #3 ?	3	0	6	TIME-OUT FOR DTMF REQUEST #3 > 0
ISLAND RELEASE DTMF REQUEST #4 ?	4 0	0	6	TIME-OUT FOR DTMF REQUEST #4 > 0
ISLAND RELEASE DTMF REQUEST #5 ?	0	0	6	TIME-OUT FOR DTMF REQUEST #5 > 0
ISLAND RELEASE DTMF REQUEST #6 ?	0	0	6	TIME-OUT FOR DTMF REQUEST #6 > 0
ISLAND RELEASE DTMF REQUEST #7 ?	0	0	6	TIME-OUT FOR DTMF REQUEST #7 > 0
ILOD MODULES ?	2	0	4	ALWAYS
ANY LED BULBS USED ?	YES	NO	YES	ILOD MODULES > 0
AUTO INSPECTION ?	NO	YES	NO	ALWAYS
BELL SENSORS ?	2	0	8	ALWAYS
BELL SENSORS TSS1 ?	YES	NO	YES	BELL SENSORS > 0
BELL SENSORS TSS2 ?	YES	NO	YES	BELL SENSORS > 0
BELL SENSORS TSS3 ?	N/A	NO	YES	BELL SENSORS > 0
BELL SENSORS TSS4 ?	N/A	NO	YES	BELL SENSORS > 0
BELL SENSORS TSS5 ?	N/A	NO	YES	BELL SENSORS > 0
BELL SENSORS TSS6 ?	N/A	NO	YES	BELL SENSORS > 0
BELL SENSORS TSS7 ?	N/A	NO	YES	BELL SENSORS > 0
BELL SENSORS TSS8 ?	N/A	NO	YES	BELL SENSORS > 0
BELL ON ?	GATES LOWERING	GATES LOWERING		BELL SENSORS > 0
		GATES MOVING		
		ALWAYS		
BATTERY PERCENT FOR ALARM ?	85	0	100	ALWAYS
GFT'S ?	YES	YES	NO	ALWAYS
BATTERIES ON GFT1 ?	2	1	2	GFT'S = YES
GATE UP SOURCE ?	GP	TSS	GP	GATE > 0
GATE DOWN SOURCE ?	GD	TIP , TSS	GD	GATES > 0
USE CELL MODEM NON-CRITICAL FEATURE ?	NO	NO	YES	ALWAYS
FULL APPROACH MOVE ALARMS ?	ACTIVATE	ACTIVATE		ALWAYS
		DO NOT ACTIVATE		

YOU WILL NOW SEE A MESSAGE "PLEASE WAIT COMPILING STAGE 2" CONTINUE TO NEXT PROGRAM MENU QUESTIONS.

STAGE 3

PROGRAM MENU QUESTIONS	
EDIT DIGITAL INPUTS	NO
EDIT BATTERIES	NO
EDIT RELAYS	NO
EDIT TEST LEDS	NO
EDIT ILOD SENSORS	NO
EDIT VHF SETTINGS	NO
GCP4K ATCS SUBNODE?	16

SAVE CONFIGURATION

chi-081.00-05.dgn
15-APR-2015

SII 08 JAN 2015
SII 19 JUN 2014

PROPOSED
DESIGN NO. 14-0069
RED-IN YELLOW-OUT

AS INSTALLED
DATE _____
BY _____
(PRINT NAME)

SEARIII EXECUTIVE 9V725 REV. A01U, SEARIII APPLICATION 9VC45 REV. A01A

PROPOSED D	PROPOSED M	PROPOSED Y	REVISIONS	D	C	COMPLETED D	COMPLETED M	COMPLETED Y	C
08	01	15	TRK CIRCUITS ADDED	NDH	MRB				

REGION SOUTHERN
SUB. CHICAGO 340

SIGNALS AND COMMUNICATIONS HOMEWOOD
19 JUNE 2014
DES. NDH
CH. MRB

GCP 4000/SEAR III
SETUP & PROGRAM
GILMAN, IL
2ND STREET

CHI-081.00-05

DOT#288 987G

SIEMENS INDUSTRY INC
DES.: NDH | DATE: 19/06/14 | JOB NO.: JXXD03603
CKD.: MRB | ISSUE DATE: N/A | EST. NO.: XP-7262
DRN.: NDH | PLAN NO.: N/A | SHEET 5 OF 22
P TIME: 15:44 | P DATE: 15-APR-2015 | CAD ID.: CHI-081.00-05

SIEMENS INDUSTRY INC
LOUISVILLE DIVISION, LOUISVILLE, KY

GCP 4000 CALIBRATION HISTORY

INITIAL SET UP BY: _____ DATE: _____

		APPROACH DISTANCE CALIBRATION										LINEARIZATION CALIBRATION	
		EZ/EX VALUES (TRACK UNOCCUPIED)				HARD WIRE SHUNT AT TERMINATION SHUNT				COMPUTED APPROACH DISTANCE		LINEARIZATION STEP VALUE	
		EZ		EX		EZ		EX					
		NRML	STBY	NRML	STBY	NRML	STBY	NRML	STBY	NRML	STBY	NRML	STBY
SOUTH	TRACK 1												
NORTH	TRACK 1												
SOUTH	TRACK 2	N/A	N/A	N/A	N/A	N/A	N/A	N/A	N/A	N/A	N/A	N/A	N/A
NORTH	TRACK 2												
SOUTH	TRACK 3												
NORTH	TRACK 3	N/A	N/A	N/A	N/A	N/A	N/A	N/A	N/A	N/A	N/A	N/A	N/A
SOUTH	TRACK 4	N/A	N/A	N/A	N/A	N/A	N/A	N/A	N/A	N/A	N/A	N/A	N/A
NORTH	TRACK 4												
SOUTH	TRACK 5	N/A	N/A	N/A	N/A	N/A	N/A	N/A	N/A	N/A	N/A	N/A	N/A
NORTH	TRACK 5												

GCP 4000 CALIBRATION HISTORY

INITIAL SET UP BY: _____ DATE: _____

		APPROACH DISTANCE CALIBRATION										LINEARIZATION CALIBRATION	
		EZ/EX VALUES (TRACK UNOCCUPIED)				HARD WIRE SHUNT AT TERMINATION SHUNT				COMPUTED APPROACH DISTANCE		LINEARIZATION STEP VALUE	
		EZ		EX		EZ		EX					
		NRML	STBY	NRML	STBY	NRML	STBY	NRML	STBY	NRML	STBY	NRML	STBY
SOUTH	TRACK 1												
NORTH	TRACK 1												
SOUTH	TRACK 2	N/A	N/A	N/A	N/A	N/A	N/A	N/A	N/A	N/A	N/A	N/A	N/A
NORTH	TRACK 2												
SOUTH	TRACK 3												
NORTH	TRACK 3	N/A	N/A	N/A	N/A	N/A	N/A	N/A	N/A	N/A	N/A	N/A	N/A
SOUTH	TRACK 4	N/A	N/A	N/A	N/A	N/A	N/A	N/A	N/A	N/A	N/A	N/A	N/A
NORTH	TRACK 4												
SOUTH	TRACK 5	N/A	N/A	N/A	N/A	N/A	N/A	N/A	N/A	N/A	N/A	N/A	N/A
NORTH	TRACK 5												

GCP 4000 CALIBRATION HISTORY

INITIAL SET UP BY: _____ DATE: _____

		APPROACH DISTANCE CALIBRATION										LINEARIZATION CALIBRATION	
		EZ/EX VALUES (TRACK UNOCCUPIED)				HARD WIRE SHUNT AT TERMINATION SHUNT				COMPUTED APPROACH DISTANCE		LINEARIZATION STEP VALUE	
		EZ		EX		EZ		EX					
		NRML	STBY	NRML	STBY	NRML	STBY	NRML	STBY	NRML	STBY	NRML	STBY
SOUTH	TRACK 1												
NORTH	TRACK 1												
SOUTH	TRACK 2	N/A	N/A	N/A	N/A	N/A	N/A	N/A	N/A	N/A	N/A	N/A	N/A
NORTH	TRACK 2												
SOUTH	TRACK 3												
NORTH	TRACK 3	N/A	N/A	N/A	N/A	N/A	N/A	N/A	N/A	N/A	N/A	N/A	N/A
SOUTH	TRACK 4	N/A	N/A	N/A	N/A	N/A	N/A	N/A	N/A	N/A	N/A	N/A	N/A
NORTH	TRACK 4												
SOUTH	TRACK 5	N/A	N/A	N/A	N/A	N/A	N/A	N/A	N/A	N/A	N/A	N/A	N/A
NORTH	TRACK 5												

SII 08 JAN 2015
SII 19 JUN 2014

PROPOSED
DESIGN NO. 14-0069
RED-IN YELLOW-OUT

AS INSTALLED
DATE _____
BY _____
(PRINT NAME)

PROPOSED D	M	Y	REVISIONS	D	C	COMPLETED D	M	Y	C
08	01	15	TRK CIRCUITS ADDED	NDH	MRB				

REGION SOUTHERN
SUB. CHICAGO 340

SIGNALS AND COMMUNICATIONS HOMEWOOD
19 JUNE 2014
DES. NDH
CH. MRB

GCP 4000
CALIBRATION HISTORY
GILMAN, IL
2ND STREET

CHI-081.00-06

DOT#288 987G

REVISIONS NO.	DATE	BY	DESCRIPTION	APP. BY
1				
2				
3				
4				
5				

SIEMENS INDUSTRY INC

DES.: NDH	DATE: 19/06/14	JOB NO.: JXXD03603	
CKD.: MRB	ISSUE DATE: N/A	EST. NO.: XP-7262	
DRN.: NDH	PLAN NO.: N/A	SHEET 6 OF 22	
P TIME: 15:45	P DATE: 15-APR-2015	CAD ID.: CHI-081.00-06	

SIEMENS INDUSTRY INC
LOUISVILLE DIVISION, LOUISVILLE, KY

chi-081.00-06.dgn
15-APR-2015

REVISIONS				
NO.	DATE	BY	DESCRIPTION	APP. BY
1				
2				
3				
4				
5				

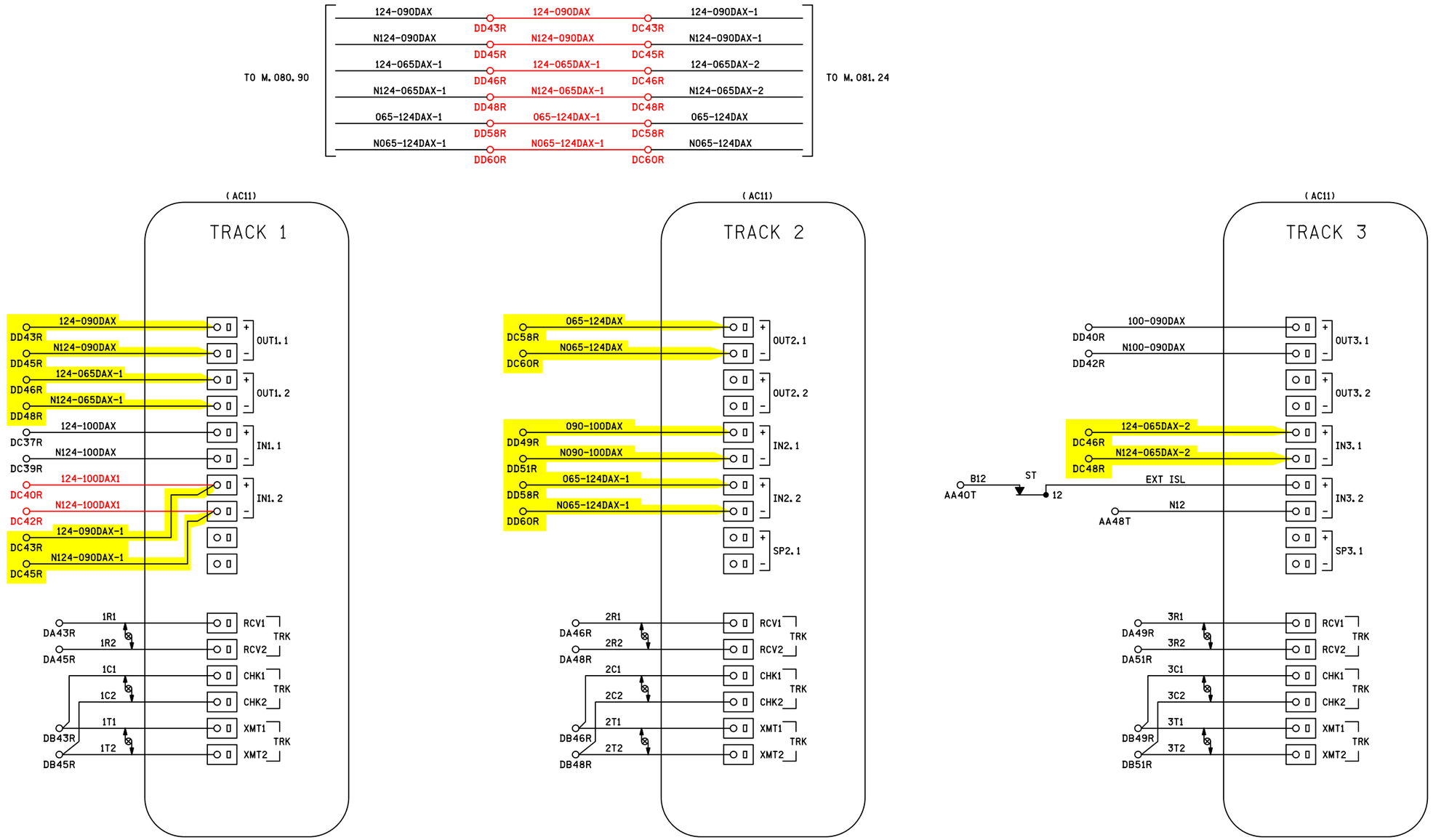

NOTES

1) ALL WIRING #16 AWG UNLESS OTHERWISE NOTED

DENOTES TWISTED PAIR

SII 08 JAN 2015
SII 19 JUN 2014

PROPOSED
DESIGN NO. 14-0069
RED-IN YELLOW-OUT

AS INSTALLED
DATE _____
BY _____
(PRINT NAME)

PROPOSED D	M	Y	REVISIONS	D	C	COMPLETED D	M	Y	C
08	01	15	TRK CIRCUITS ADDED	NDH	MRB				

REGION SOUTHERN
SUB. CHICAGO 340

SIGNALS AND COMMUNICATIONS
HOMEWOOD
19 JUNE 2014

DES. NDH
CH. MRB

GCP 4000
TRACK 1, 2 & 3 MODULE CONNECTIONS
GILMAN, IL
2ND STREET

CHI-081.00-07

DOT#288 987G

SIEMENS INDUSTRY INC

DES.: NDH	DATE: 19/06/14	JOB NO.: JXXD03603	
CKD.: MRB	ISSUE DATE: N/A	EST. NO.: XP-7262	
DRN.: NDH	PLAN NO.: N/A	SHEET 7 OF 22	
P TIME: 15:45	P DATE: 15-APR-2015	CAD ID.: CHI-081.00-07	

SIEMENS INDUSTRY INC
LOUISVILLE DIVISION, LOUISVILLE, KY

chi-081.00-07.dgn
15-APR-2015

REVISIONS				
NO.	DATE	BY	DESCRIPTION	APP. BY
1				
2				
3				
4				
5				

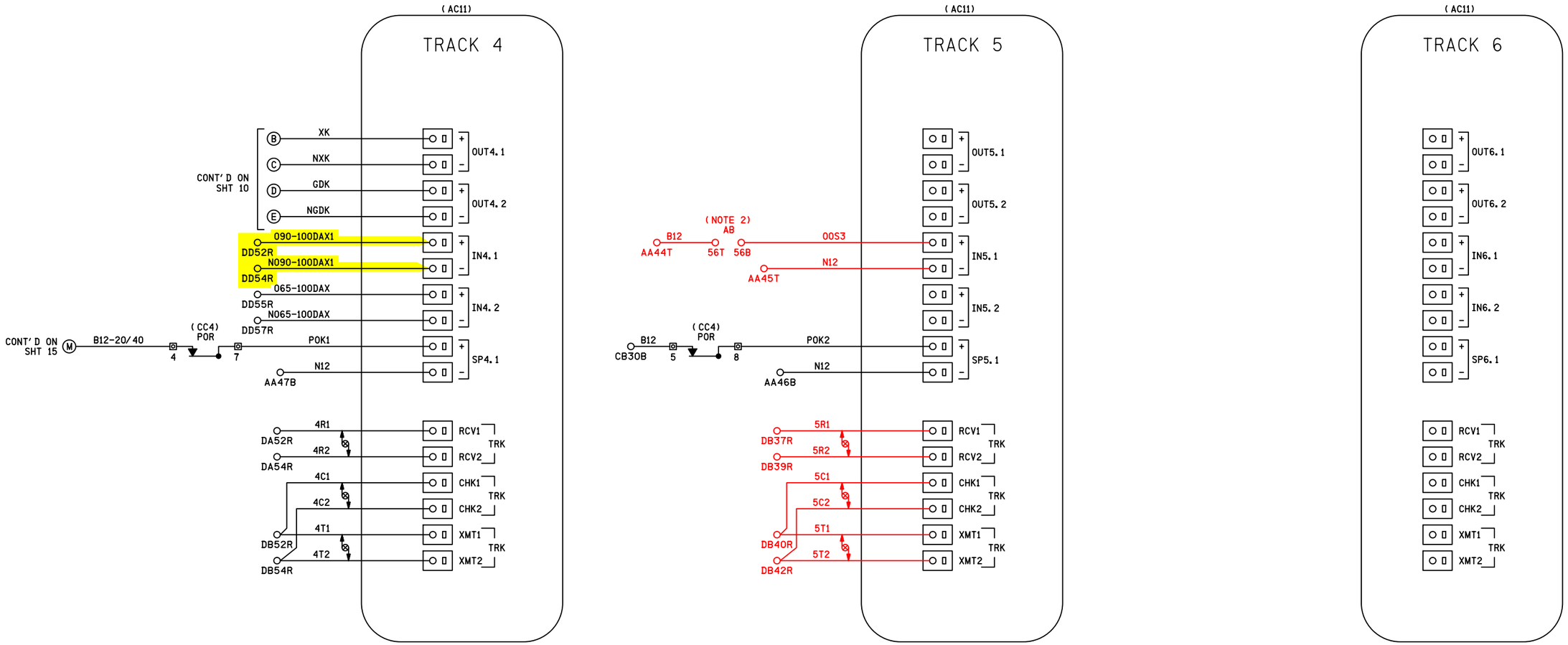

NOTES

1) ALL WIRING #16 AWG UNLESS OTHERWISE NOTED

2) TO TAKE SIDING TRACK (T4 & T5) OUT OF SERVICE, JUMPER AB56T TO AB56B

DENOTES TWISTED PAIR

SII 08 JAN 2015
SII 19 JUN 2014

PROPOSED
DESIGN NO. 14-0069
RED-IN YELLOW-OUT

AS INSTALLED
DATE _____
BY _____
(PRINT NAME)

PROPOSED D	PROPOSED M	PROPOSED Y	REVISIONS	D	C	COMPLETED D	COMPLETED M	COMPLETED Y	C
08	01	15	TRK CIRCUITS ADDED	NDH	MRB				

REGION SOUTHERN
SUB. CHICAGO 340

SIGNALS AND COMMUNICATIONS HOMEWOOD
19 JUNE 2014
DES. NDH
CH. MRB

GCP 4000
TRACK 4, 5 & 6 MODULE CONNECTIONS
GILMAN, IL
2ND STREET

CHI-081.00-08

DOT#288 987G

SIEMENS INDUSTRY INC
LOUISVILLE DIVISION, LOUISVILLE, KY

SIEMENS INDUSTRY INC

DES.: NDH	DATE: 19/06/14	JOB NO.: JXXD03603	
CKD.: MRB	ISSUE DATE: N/A	EST. NO.: XP-7262	
DRN.: NDH	PLAN NO.: N/A	SHEET 8 OF 22	
P TIME: 15:45	P DATE: 15-APR-2015	CAD ID.: CHI-081.00-08	

chi-081.00-08.dgn
15-APR-2015

REVISIONS				
NO.	DATE	BY	DESCRIPTION	APP. BY
1				
2				
3				
4				
5				

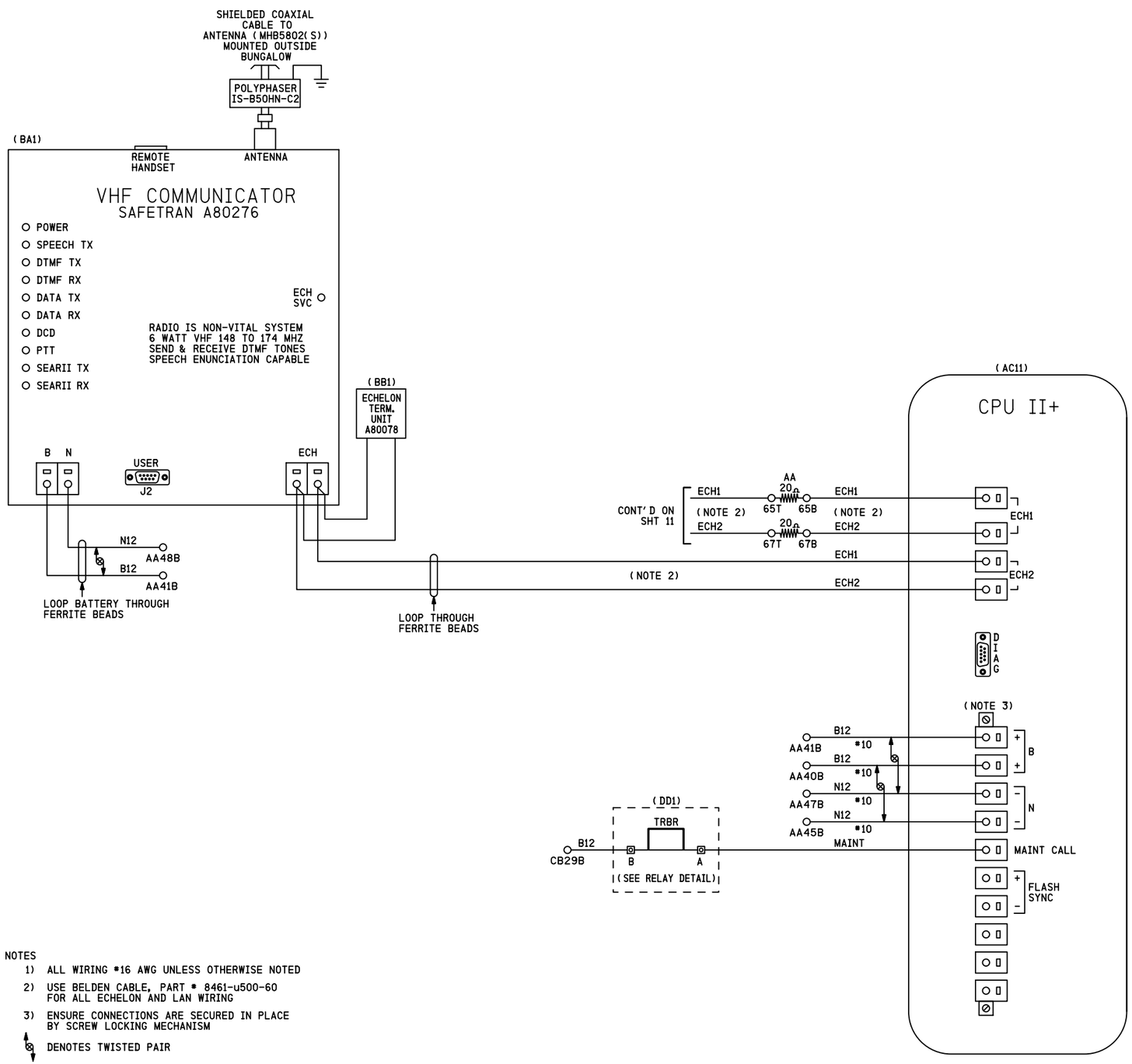

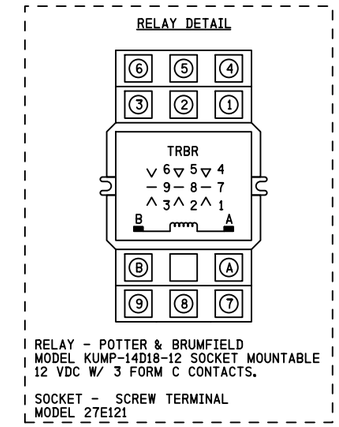

PART OF POWER OFF INDICATOR REPEATER RELAY JUNCTION BOX

NOTES

1) ALL WIRING #16 AWG UNLESS OTHERWISE NOTED
2) USE BELDEN CABLE, PART # 8461-u500-60 FOR ALL ECHELON AND LAN WIRING
3) ENSURE CONNECTIONS ARE SECURED IN PLACE BY SCREW LOCKING MECHANISM

DENOTES TWISTED PAIR

SII 19 JUN 2014

PROPOSED
DESIGN NO. 14-0069
RED-IN YELLOW-OUT

AS INSTALLED
DATE _____
BY _____
(PRINT NAME)

PROPOSED			REVISIONS	D	C	COMPLETED			C
D	M	Y				D	M	Y	

REGION SOUTHERN
SUB. CHICAGO 340

SIGNALS AND COMMUNICATIONS HOMEWOOD
19 JUNE 2014
DES. NDH
CH. MRB

GCP 4000
CPUII+ & VHF COMMUNICATOR
GILMAN, IL
2ND STREET

CHI-081.00-09

DOT#288 987G

SIEMENS INDUSTRY INC

DES.: NDH	DATE: 19/06/14	JOB NO.: JXXD03603	
CKD.: MRB	ISSUE DATE: N/A	EST. NO.: XP-7262	
DRN.: NDH	PLAN NO.: N/A	SHEET 9 OF 22	
P. TIME: 15:45	P. DATE: 15-APR-2015	CAD ID.: CHI-081.00-09	

SIEMENS INDUSTRY INC
LOUISVILLE DIVISION, LOUISVILLE, KY

chi-081.00-09.dgn
15-APR-2015

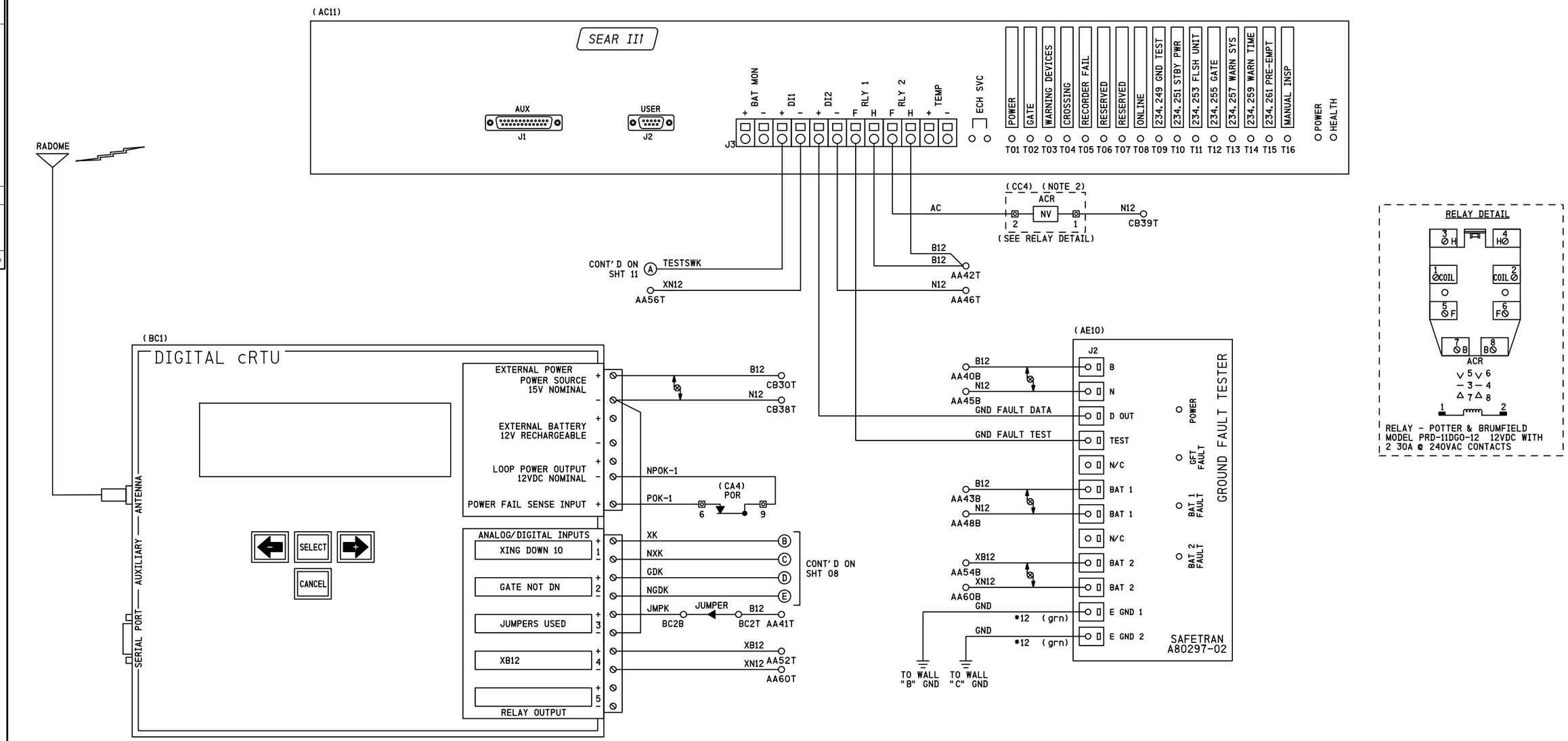

CONFIGKEY:	30
MODEL:	C06C/2ANA V2.3
SERIAL #:	
SITE IDENTIFIER:	DOT# 288 987G

* FIELD TO PROVIDE SERIAL *

	LOW ALARM	RETURN	HIGH ALARM	RETURN
B12	11.6	12.6	15.6	14.6
XB12	13.8	14.8	17.8	16.8

NOTES

1) ALL WIRING #16 AWG UNLESS OTHERWISE NOTED
2) PART OF SEARIII POWER CONTROL AND INDICATION RELAY JUNCTION BOX

⊗ DENOTES TWISTED PAIR

SII 19 JUN 2014

PROPOSED
DESIGN NO. 14-0069
RED-IN YELLOW-OUT

AS INSTALLED
DATE _____
BY _____
(PRINT NAME)

PROPOSED D	M	Y	REVISIONS	D	C	COMPLETED D	M	Y	C

REGION SOUTHERN
SUB. CHICAGO 340

SIGNALS AND COMMUNICATIONS HOMEWOOD
DES. NDH
19 JUNE 2014
CH. MRB

GCP 4000
SEAR III WITH GFT & CRTU
GILMAN, IL
2ND STREET

CHI-081.00-10

DOT#288 987G

REVISIONS				
NO.	DATE	BY	DESCRIPTION	APP. BY
1				
2				
3				
4				
5				

SIEMENS INDUSTRY INC

DES.: NDH	DATE: 19/06/14	JOB NO.: JXXID03603	
CKD.: MRB	ISSUE DATE: N/A	EST. NO.: XP-7262	
DRN.: NDH	PLAN NO.: N/A	SHEET 10 OF 22	
P. TIME: 15:45	P. DATE: 15-APR-2015	CAD ID.: CHI-081.00-10	

chi-081.00-10.dgn
15-APR-2015

SIEMENS INDUSTRY INC
LOUISVILLE DIVISION, LOUISVILLE, KY

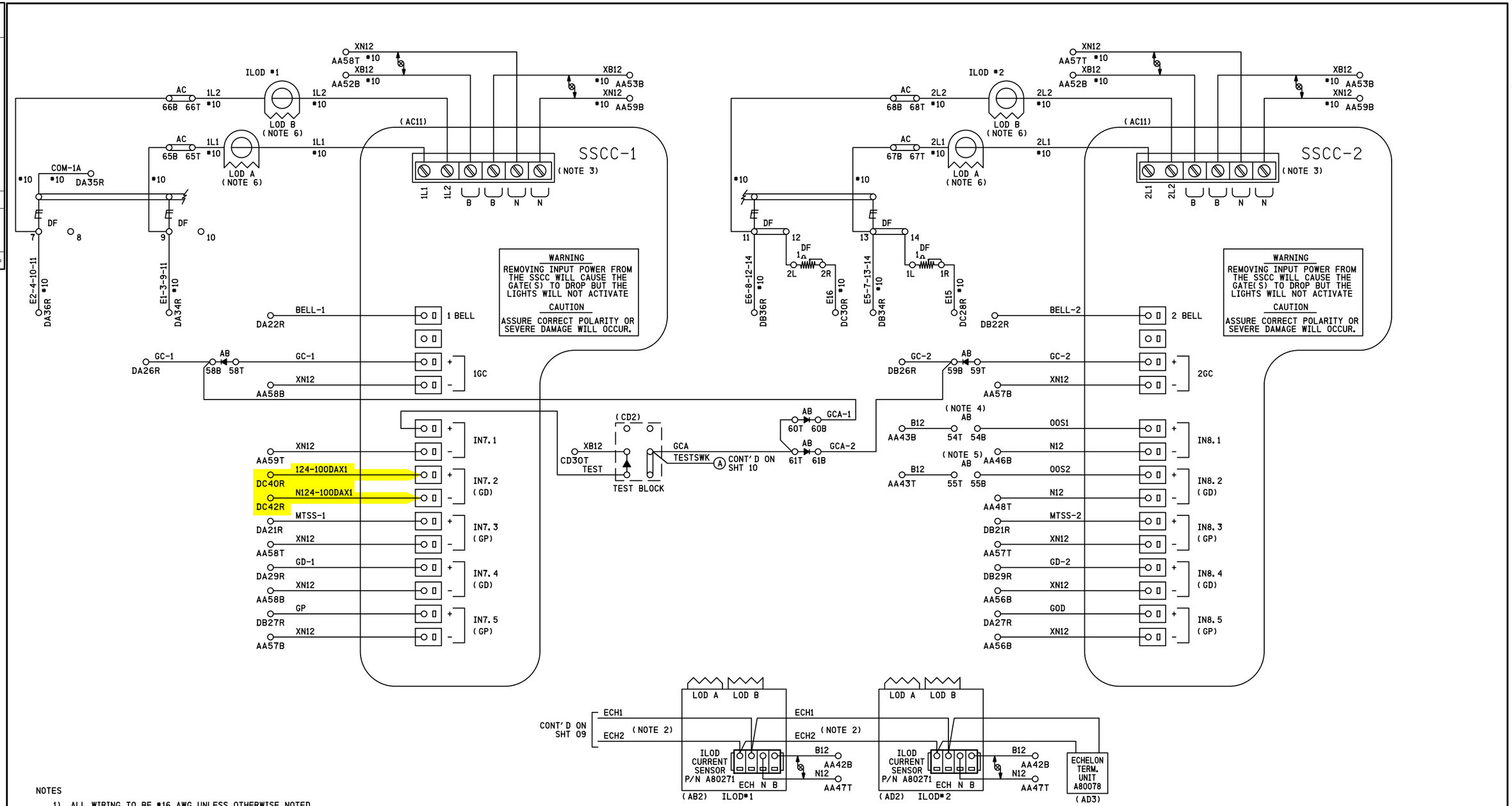

NOTES

1) ALL WIRING TO BE #16 AWG UNLESS OTHERWISE NOTED
2) USE BELDEN CABLE, PART # 8461-u500-60 FOR ALL ECHELON AND LAN WIRING
3) ENSURE CONNECTIONS ARE SECURED IN PLACE BY SCREW LOCKING MECHANISM
4) TO TAKE TRACK 1 (T1 & T3) OUT OF SERVICE, JUMPER AB54T TO AB54B
5) TO TAKE TRACK 2 (T2 & T4 T3) OUT OF SERVICE, JUMPER AB55T TO AB55B
6) LOOP WIRE THROUGH LOD TWO (2) TIMES

DENOTES RECTIFIER, SAFETRAN PART # 8002A299006

DENOTES TWISTED PAIR

SII 08 JAN 2015
SII 19 JUN 2014

PROPOSED
DESIGN NO. 14-0069
RED-IN YELLOW-OUT

AS INSTALLED
DATE
BY
(PRINT NAME)

PROPOSED D	M	Y	REVISIONS	D	C	COMPLETED D	M	Y	C
08	01	15	TRK CIRCUITS ADDED	NDH	MRB				

REGION SOUTHERN
SUB. CHICAGO 340
SIGNALS AND COMMUNICATIONS HOMEWOOD
DES. NDH
CH. MRB
19 JUNE 2014
GCP 4000/SSCCIIII GATE CONTROLLERS W/ ILODS
GILMAN, IL
2ND STREET
CHI-081.00-11

DOT#288 987G

NO.	DATE	BY	DESCRIPTION	APP. BY
1				
2				
3				
4				
5				

REVISIONS

SIEMENS INDUSTRY INC
DES.: NDH | DATE: 19/06/14 | JOB NO.: JXXD03603
CKD.: MRB | ISSUE DATE: N/A | EST. NO.: XP-7262
DRN.: NDH | PLAN NO.: N/A | SHEET 11 OF 22
P TIME: 15:45 | P DATE: 15-APR-2015 | CAD ID.: CHI-081.00-11

SIEMENS INDUSTRY INC
LOUISVILLE DIVISION, LOUISVILLE, KY

chi-081.00-11.dgn
15-APR-2015

CONTACT	CLOSED AT	FUNCTION
6	70° -90°	POWER DOWN CONTROL
7	0° -89°	POWER UP CONTROL
8	83° -90°	FLASHING LGT. CONTROL
9	5° -90°	BELL CONTROL
10	0° -5°	GATE DOWN INDICATION
11	N/A	SPARE
12	N/A	SPARE

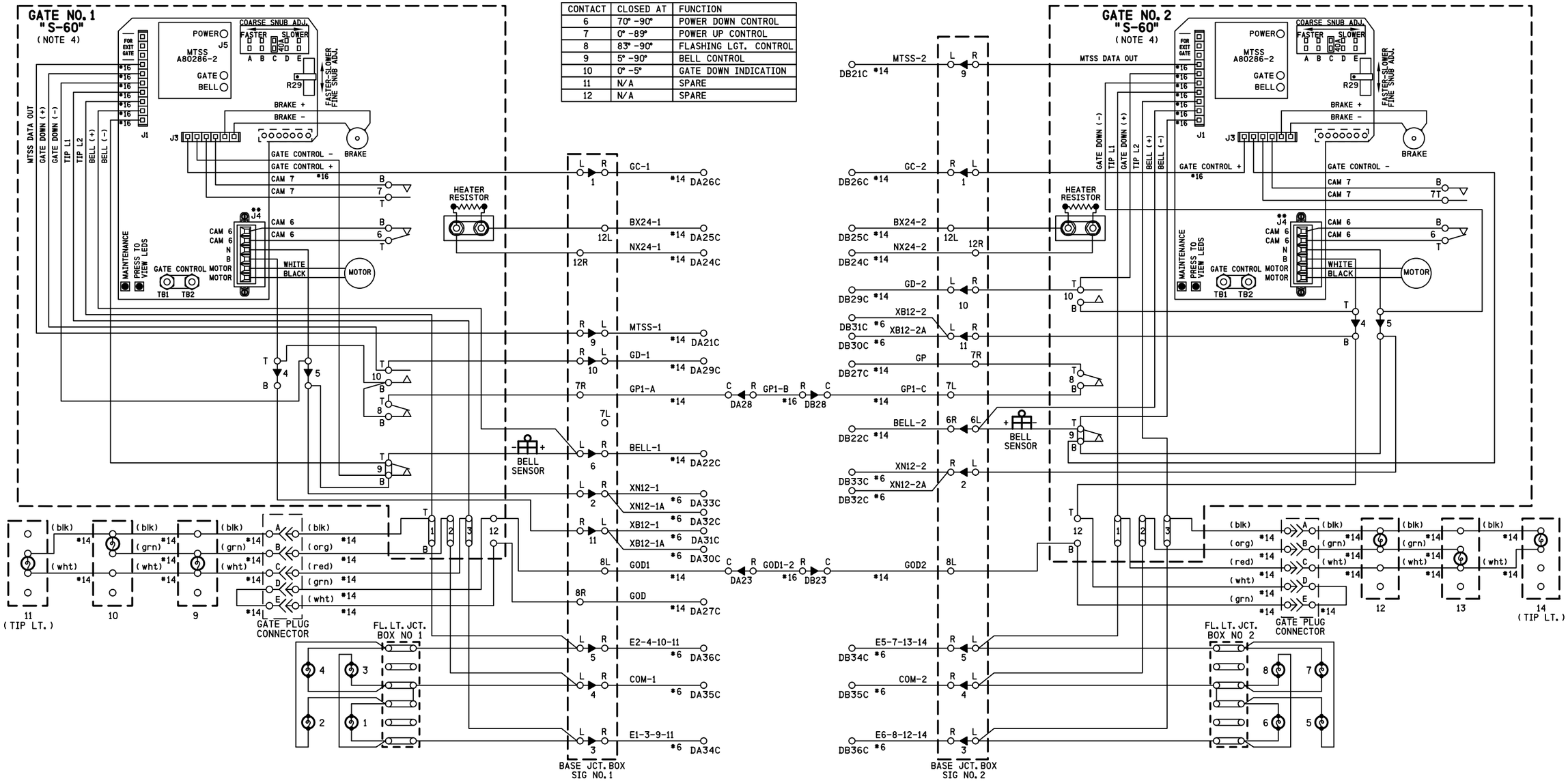

NOTES

1) ON GATE No. 1 ADD JUMPER BETWEEN TERMINALS:
   ADD JUMPER BETWEEN TERMINAL 4T & 10B,
   ADD JUMPER BETWEEN TERMINAL 8B & 10B,
   ADD JUMPER BETWEEN TERMINAL 5B & 9B
2) ON GATE No. 2 ADD JUMPER BETWEEN TERMINALS:
   ADD JUMPER BETWEEN TERMINAL 4T & 10B,
   ADD JUMPER BETWEEN TERMINAL 5B & 9B,
   ADD JUMPER BETWEEN TERMINAL 4B & 12T
3) ALL WIRING #10 AWG UNLESS OTHERWISE NOTED
4) GATE DESCENT TIME (RELEASE FROM VERTICAL TO FULLY HORIZONTAL) TO BE WITHIN 11 SECONDS
5) BELL CUT-OUT (5° -90°) WHEN REQUIRED REMOVE STRAP BETWEEN 9B AND 9T
6) ENSURE ALL TERMINALS HAVE TWO SHOULDER NUTS

SII 19 JUN 2014

PROPOSED
DESIGN NO. 14-0069
RED-IN YELLOW-OUT

AS INSTALLED
DATE _____
BY _____
(PRINT NAME)

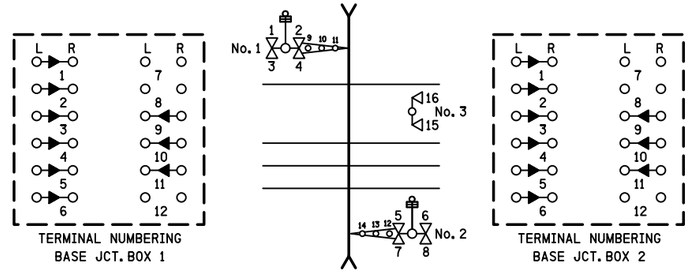

PROPOSED D	M	Y	REVISIONS	D	C	COMPLETED D	M	Y	C

REGION SOUTHERN
SUB. CHICAGO 340

SIGNALS AND COMMUNICATIONS HOMEWOOD
19 JUNE 2014
DES. NDH
CH. MRB

GATE 1 & 2 MECH. CONTROL CIRCUITS
SAFETRAN S-60
GILMAN, IL
2ND STREET

CHI-081.00-12

DOT#288 987G

SIEMENS INDUSTRY INC
LOUISVILLE DIVISION, LOUISVILLE, KY

SIEMENS INDUSTRY INC
DES.: NDH | DATE: 19/06/14 | JOB NO.: JXXD03603
CKD.: MRB | ISSUE DATE: N/A | EST. NO.: XP-7262
DRN.: NDH | PLAN NO.: N/A | SHEET 12 OF 22
P TIME: 15:45 | P DATE: 15-APR-2015 | CAD ID.: CHI-081.00-12

NO.	DATE	BY	DESCRIPTION	APP. BY
1				
2				
3				
4				
5				

REVISIONS

chi-081.00-12.dgn
15-APR-2015

REVISIONS				
NO.	DATE	BY	DESCRIPTION	APP. BY
1				
2				
3				
4				
5				

chi-081.00-13.dgn
15-APR-2015

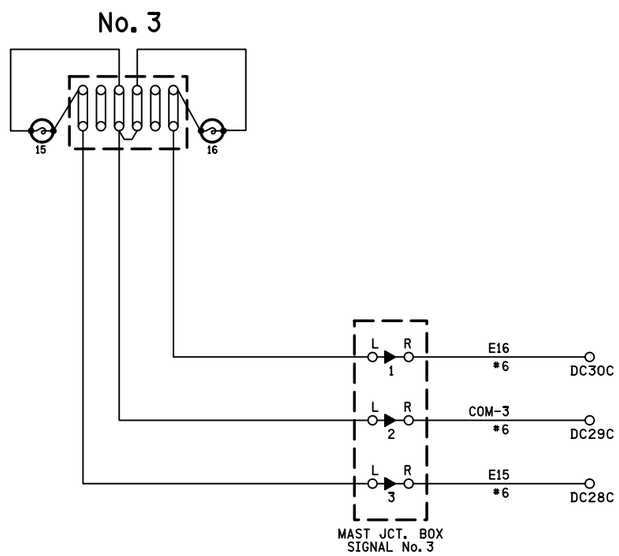

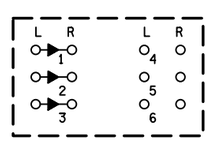

TERMINAL NUMBERING
MAST JCT. BOX 3

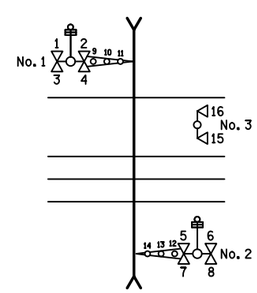

NOTES

1) ALL WIRING #10 AWG UNLESS OTHERWISE NOTED.
2) ENSURE ALL TERMINALS HAVE TWO SHOULDER NUTS.

SII 19 JUN 2014

PROPOSED
DESIGN NO. 14-0069
RED-IN YELLOW-OUT

AS INSTALLED
DATE _____
BY _____
(PRINT NAME)

PROPOSED			REVISIONS	D	C	COMPLETED			C
D	M	Y				D	M	Y	

REGION SOUTHERN
SUB. CHICAGO 340

SIGNALS AND COMMUNICATIONS HOMEWOOD
19 JUNE 2014
DES. NDH
CH. MRB

FLASHER CONTROL CIRCUITS
GILMAN, IL
2ND STREET

CHI-081.00-13

DOT#288 987G

SIEMENS INDUSTRY INC			
DES. : N/A	DATE: N/A	JOB NO. : N/A	
CKD. : N/A	ISSUE DATE: N/A	EST. NO. :N/A	
DRN. : N/A	PLAN NO. :N/A	SHEET N/A OF N/A	
P TIME:15:45	P DATE:15-APR-2015	CAD ID. : N/A	

SIEMENS INDUSTRY INC
LOUISVILLE DIVISION, LOUISVILLE, KY