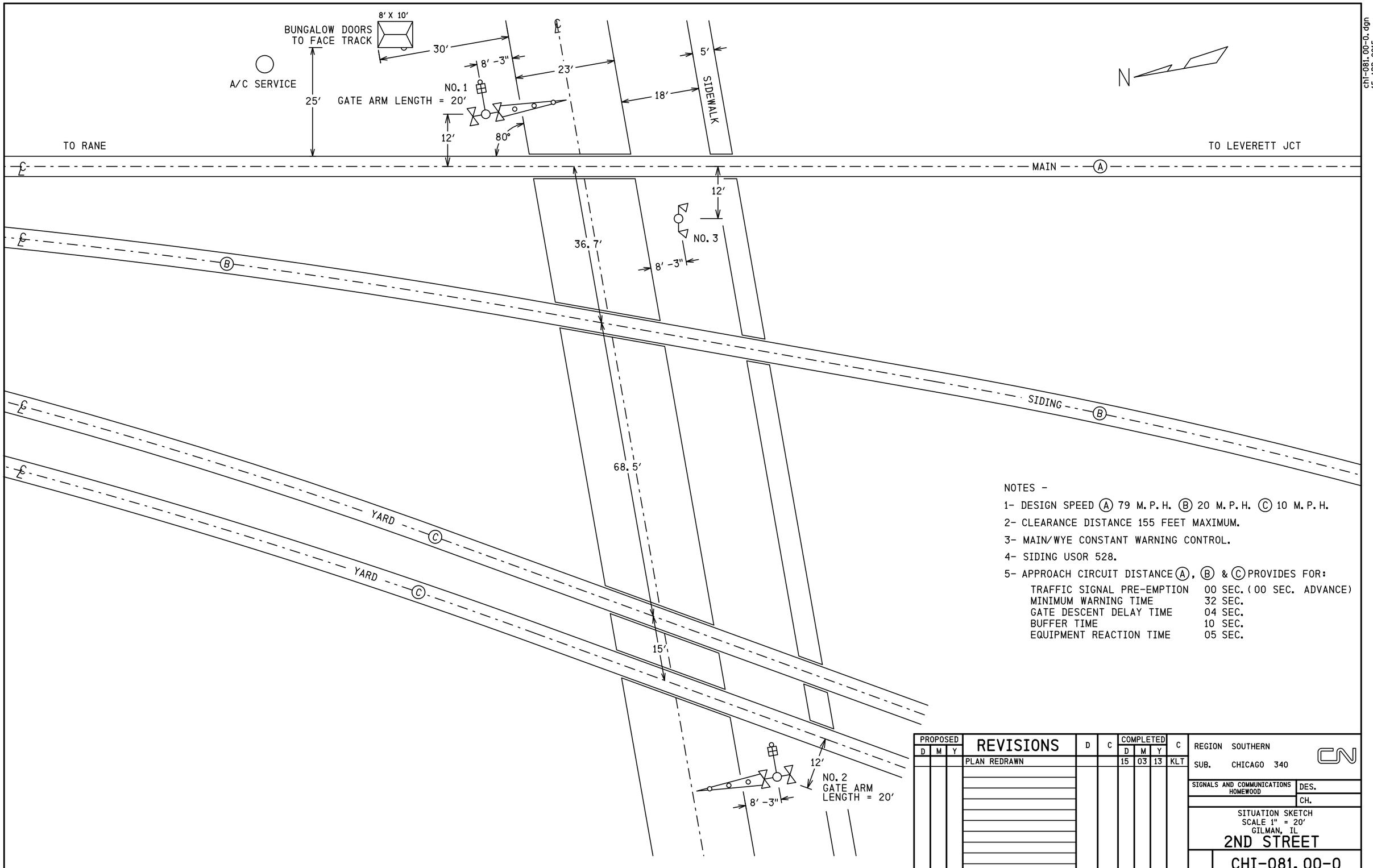

NOTES -

1- DESIGN SPEED (A) 79 M.P.H. (B) 20 M.P.H. (C) 10 M.P.H.

2- CLEARANCE DISTANCE 155 FEET MAXIMUM.

3- MAIN/WYE CONSTANT WARNING CONTROL.

4- SIDING USOR 528.

5- APPROACH CIRCUIT DISTANCE (A), (B) & (C) PROVIDES FOR:

TRAFFIC SIGNAL PRE-EMPTION	00 SEC. (00 SEC. ADVANCE)
MINIMUM WARNING TIME	32 SEC.
GATE DESCENT DELAY TIME	04 SEC.
BUFFER TIME	10 SEC.
EQUIPMENT REACTION TIME	05 SEC.

PROPOSED D	PROPOSED M	PROPOSED Y	REVISIONS	D	C	COMPLETED D	COMPLETED M	COMPLETED Y	C
			PLAN REDRAWN			15	03	13	KLT

REGION SOUTHERN

SUB. CHICAGO 340

SIGNALS AND COMMUNICATIONS HOMEWOOD

DES.

CH.

SITUATION SKETCH
SCALE 1" = 20'
GILMAN, IL

2ND STREET

CHI-081.00-0

DOT#288 987G

24

chi-081.00-0.dgn
15-APR-2015

SIEMENS INDUSTRY INC
LOUISVILLE DIVISION, LOUISVILLE, KY

REVISIONS			
NO.	DATE	BY	DESCRIPTION	APP. BY
1				
2				
3				
4				
5				

FLASHING LIGHT UNITS ALIGNMENT TABLE

PRIMARY FRONT LIGHTS FOR VEHICLES							
SIG #	LIGHT #	ROUNDEL		ROAD SPEED	MINIMUM DISTANCE	RECOMMENDED DISTANCE	ALIGNMENT DISTANCE
		SIZE	TYPE	MPH	FT	FT	FT
1	1,2	12"	LED	30	270	450	
2	7,8	12"	LED	30	270	450	
BACK LIGHTS FOR VEHICLES							
SIG #	LIGHT #	ROUNDEL		ROAD SPEED	MINIMUM DISTANCE	RECOMMENDED DISTANCE	ALIGNMENT DISTANCE
		SIZE	TYPE	MPH	FT	FT	FT
1	3,4	12"	LED	N/A	N/A	N/A	50
2	5,6	12"	LED	N/A	N/A	N/A	50
INTERMEDIATE FRONT LIGHTS FOR VEHICLES							
SIG #	LIGHT #	ROUNDEL		ROAD SPEED	MINIMUM DISTANCE	RECOMMENDED DISTANCE	ALIGNMENT DISTANCE
		SIZE	TYPE	MPH	FT	FT	FT
3	15,16	12"	LED	N/A	N/A	N/A	50

NOTE
FIELD IS TO PROVIDE THE ACTUAL ALIGNMENT DISTANCE AS DETERMINED BY
SCP-706: ROAD CROSSING DEVICE LIGHT UNIT ALIGNMENT PROCEDURES

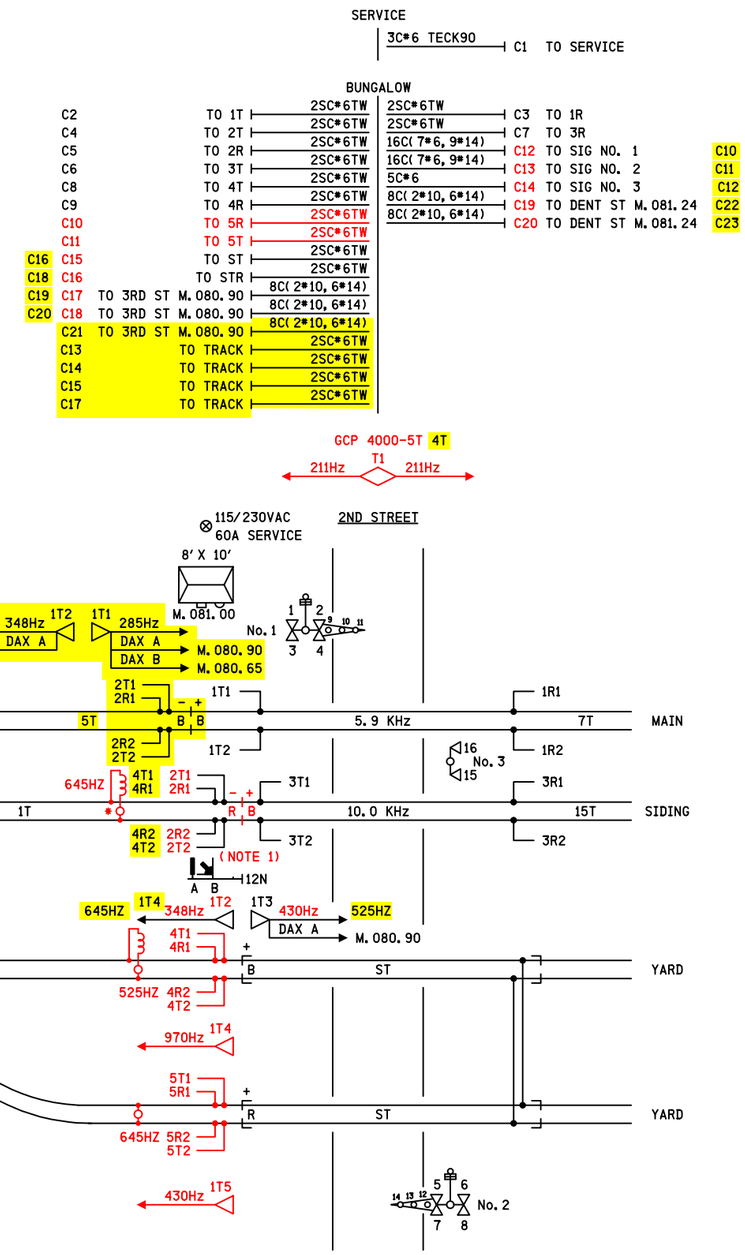

CONTENT	SHEET NO.
SITUATION SKETCH	0
TRACK LAYOUT & INDEX	01
GCP 4000 CHASSIS & MODULE LAYOUT	02
GCP 4000 PROGRAM INFORMATION	03
GCP 4000 PROGRAM INFORMATION	04
GCP 4000/SEAR III SETUP & PROGRAM	05
GCP 4000 CALIBRATION HISTORY	06
GCP 4000 TRACK 1, 2 & 3 MODULE CONNECTIONS	07
GCP 4000 TRACK 4, 5 & 6 MODULE CONNECTIONS	08
GCP 4000 CPUII+ & VHF COMMUNICATOR	09
GCP 4000/SEARIII WITH GFT & CRTU	10
GCP 4000/SSCCIIII GATE CONTROLLERS W/ ILODS	11
GATE 1 & 2 MECH. CONTROL CIRCUITS SAFETRAN S-60	12
FLASHER CONTROL CIRCUITS	13
TRACK CIRCUITS	14
DC DISTRIBUTION	15
AC DISTRIBUTION	16
BUNGALOW LAYOUT TOP VIEW	17
ENTRANCE BOARD L.I.G.P. INSIDE	18
ENTRANCE BOARD L.I.G.P. INSIDE	19
ENTRANCE BOARD L.I.G.P. OUTSIDE	20
ENTRANCE BOARD L.I.G.P. OUTSIDE	21
BUNGALOW LAYOUT SIDES A & B	22
BUNGALOW LAYOUT SIDES C & D	23

NOTE
1) CIRCUITS FOR 1TR, 15TB & SIGNAL 12N LOCATED AT M.080.90

DENOTES MULTIFREQUENCY NARROW-BAND SHUNT #62775-3497

DENOTES MULTIFREQUENCY NARROW-BAND SHUNT #62775-3497 WITH SIMULATED TRACK INDUCTOR 8V617-0200

DENOTES MULTIFREQUENCY NARROW-BAND SHUNT #62775-3497 WITH SIMULATED TRACK INDUCTOR 8V617-0800

SII 08 JAN 2015
SII 19 JUN 2014

PROPOSED
DESIGN NO. 14-0069
RED-IN YELLOW-OUT

AS INSTALLED
DATE _____
BY _____
(PRINT NAME)

PROPOSED D	M	Y	REVISIONS	D	C	COMPLETED D	M	Y	C
08	01	15	TRK CIRCUITS ADDED	NDH	MRB				

REGION SOUTHERN
SUB. CHICAGO 340

SIGNALS AND COMMUNICATIONS HOMEWOOD
19 JUNE 2014
DES. NDH
CH. MRB

TRACK LAYOUT & INDEX

GILMAN, IL
2ND STREET

CHI-081.00-01

DOT#288 987G

SIEMENS INDUSTRY INC
DES.: NDH | DATE: 19/06/14 | JOB NO.: JXXD03603
CKD.: MRB | ISSUE DATE: N/A | EST. NO.: XP-7262
DRN.: NDH | PLAN NO.: N/A | SHEET 1 OF 22
P TIME: 15:43 | P DATE: 15-APR-2015 | CAD ID.: CHI-081.00-01

SIEMENS INDUSTRY INC
LOUISVILLE DIVISION, LOUISVILLE, KY

chi-081.00-01.dgn
15-APR-2015

REVISIONS				
NO.	DATE	BY	DESCRIPTION	APP. BY
1				
2				
3				
4				
5				

(AC11)

CPU II+	TRACK 1	TRACK 2	TRACK 3	TRACK 4	TRACK 5	TRACK 6	SSCC-1	SSCC-2
A80403	A80418	A80418	A80418	A80418	A80418	A80418	A80405	A80405
SLOT 1M1 OR 2M1	SLOT 1M2 OR 2M2	SLOT 1M3 OR 2M3	SLOT 1M4 OR 2M4	SLOT 1M5 OR 2M5	SLOT 1M6 OR 2M6	SLOT 1M7 OR 2M7	SLOT 1M8	SLOT 2M8

GRADE CROSSING PREDICTOR
MODEL 4000
Dual 6 Track System
A80460

#10 (grn)

CPU II+ MODULE A80403 SLOT 1M1	TRACK MODULE A80418 SLOT 1M2	TRACK MODULE A80418 SLOT 1M3	TRACK MODULE A80418 SLOT 1M4	TRACK MODULE A80418 SLOT 1M5	BLANK COVER PLATE SLOT NOT USED TRACK MODULE A80418 SLOT 1M6	BLANK COVER PLATE SLOT NOT USED SLOT 1M7	SSCCIIII MODULE A80405 SLOT 1M8	DISPLAY MODULE A80407-03
CPU II+ MODULE A80403 SLOT 2M1	TRACK MODULE A80418 SLOT 2M2	TRACK MODULE A80418 SLOT 2M3	TRACK MODULE A80418 SLOT 2M4	TRACK MODULE A80418 SLOT 2M5	BLANK COVER PLATE SLOT NOT USED TRACK MODULE A80418 SLOT 2M6	BLANK COVER PLATE SLOT NOT USED SLOT 2M7	SSCCIIII MODULE A80405 SLOT 2M8	TRANSFER MODULE A80468

SEAR III
A80410

NOTES

1) DISABLE THE DISPLAY HEATER BY REMOVING JUMPER J-22 (LOCATED AT THE EDGE OF THE DISPLAY MODULE CARD THAT PLUGS INTO THE CHASSIS)

2) SET THE TRANSFER INTERVAL TIME TO 3 MINUTES BY SETTING DIPSWITCH S3 (LOCATED IN THE UPPER LEFT CORNER OF THE TRANSFER MODULE CARD) TO:

S3-0	S3-1	S3-2	S3-3	S3-4
1	1	0	0	0

WHERE 0 = UP/OPEN
1 = DOWN/CLOSED

ATTENTION!

ENSURE THE DISPLAY MODULE HEATER IS DISABLED
LEAVING THE DISPLAY HEATER ENABLED WILL REDUCE THE AMOUNT OF BATTERY STANDBY TIME IN THE EVENT OF AN AC POWER FAILURE

HEATER FUNCTION IS JUMPER SELECTABLE ON THE DISPLAY MODULE BOARD
THREE OPTIONS ARE AVAILABLE
NORMAL LCD HTR (DEFAULT)
HI CURRENT
NO JUMPER (HEATER DISABLED)

SII 08 JAN 2015
SII 19 JUN 2014

PROPOSED
DESIGN NO. 14-0069
RED-IN YELLOW-OUT

AS INSTALLED
DATE _____
BY _____
(PRINT NAME)

PROPOSED D	M	Y	REVISIONS	D	C	COMPLETED D	M	Y	C
08	01	15	TRK CIRCUITS ADDED	NDH	MRB				

REGION SOUTHERN
SUB. CHICAGO 340
CN

SIGNALS AND COMMUNICATIONS HOMEWOOD
19 JUNE 2014
DES. NDH
CH. MRB

GCP 4000
CHASSIS & MODULE LAYOUT
GILMAN, IL
2ND STREET

CHI-081.00-02

DOT#288 987G

SIEMENS INDUSTRY INC

DES.: NDH	DATE: 19/06/14	JOB NO.: JXXD03603	
CKD.: MRB	ISSUE DATE: N/A	EST. NO.: XP-7262	
DRN.: NDH	PLAN NO.: N/A	SHEET 2 OF 22	
P TIME: 15:43	P DATE: 15-APR-2015	CAD ID.: CHI-081.00-02	

SIEMENS INDUSTRY INC
LOUISVILLE DIVISION, LOUISVILLE, KY

chi-081.00-02.dgn
15-APR-2015

REVISIONS				
NO.	DATE	BY	DESCRIPTION	APP. BY
1				
2				
3				
4				
5				

```
Program Report
--------------

Location and SIN
----------------
DOT Number: 288987G
Milepost Number: 081.00
Site Name: 2ND STREET

SIN: 762010010016

MCF and Template Selection
--------------------------
MCF Name: GCP-T6X-02-2.mcf
MCF Revision: 022
MCFCRC: 79225F13

Template = 1C:2 BI, 2 Uni pairs (OCCN)

Check Numbers
-------------
Office Check Number: 3DDD59CA
Config. Check Number: 74338964
(Based on MCF Revision 022)

Program
-------
BASIC: module configuration
Track 1/PSO 1 Slot = Track (OCCN)
Track 2/RIO 1 Slot = Track (OCCN)
Track 3/PSO 2 Slot = Track (OCCN)
Track 4/PSO 3 Slot = Track (OCCN)
Track 5/RIO 2 Slot = Track (OCCN)
Track 6/RIO 3 Slot = Not Used (OCCN)
SSCC-1 Slot = SSCC3I (OCCN)
SSCC-2 Slot = SSCC3I (OCCN)
SEAR Used = Yes (OCCN)

BASIC: MS/GCP operation
Track 1 : MS/GCP Operation = Yes (OCCN)
Track 2 : MS/GCP Operation = Yes (OCCN)
Track 3 : MS/GCP Operation = Yes (OCCN)
Track 4 : MS/GCP Operation = Yes (OCCN)
Track 5 : MS/GCP Operation = Yes (OCCN)

BASIC: Island operation
Track 1 : Island Used = Internal (OCCN)
Track 2 : Island Used = No (OCCN)
Track 3 : Island Used = Internal (OCCN)
Track 4 : Island Used = External (OCCN)
Track 5 : Island Used = No (OCCN)

BASIC: preemption
Preempt Logic = No (OCCN)

BASIC: radio Dax links
Radio DAX link A Used = No (OCCN)
Radio DAX link B Used = No (OCCN)

BASIC: Vital Comms links
Vital Comms link 1 Used = No (OCCN)
Vital Comms link 2 Used = No (OCCN)

PREDICTORS: track 1
Track 1 : Prime Used = Yes (OCCN)
Track 1 : Dax A Used = No (OCCN)
Track 1 : Dax B Used = No (OCCN)
Track 1 : Dax C Used = No (OCCN)
Track 1 : Dax D Used = No (OCCN)
Track 1 : Dax E Used = No (OCCN)
Track 1 : Dax F Used = No (OCCN)
Track 1 : Dax G Used = No (OCCN)

PREDICTORS: track 2
Track 2 : Prime Used = Yes (OCCN)
Track 2 : Dax A Used = No (OCCN)
Track 2 : Dax B Used = No (OCCN)
Track 2 : Dax C Used = No (OCCN)
Track 2 : Dax D Used = No (OCCN)
Track 2 : Dax E Used = No (OCCN)
Track 2 : Dax F Used = No (OCCN)
Track 2 : Dax G Used = No (OCCN)

PREDICTORS: track 3
Track 3 : Prime Used = Yes (OCCN)
Track 3 : Dax A Used = Yes (OCCN)
Track 3 : Dax B Used = No (OCCN)
Track 3 : Dax C Used = No (OCCN)
Track 3 : Dax D Used = No (OCCN)
Track 3 : Dax E Used = No (OCCN)
Track 3 : Dax F Used = No (OCCN)
Track 3 : Dax G Used = No (OCCN)

PREDICTORS: track 4
Track 4 : Prime Used = Yes (OCCN)
Track 4 : Dax A Used = No (OCCN)
Track 4 : Dax B Used = No (OCCN)
Track 4 : Dax C Used = No (OCCN)
Track 4 : Dax D Used = No (OCCN)
Track 4 : Dax E Used = No (OCCN)
Track 4 : Dax F Used = No (OCCN)
Track 4 : Dax G Used = No (OCCN)

PREDICTORS: track 5
Track 5 : Prime Used = Yes (OCCN)
Track 5 : Dax A Used = No (OCCN)
Track 5 : Dax B Used = No (OCCN)
Track 5 : Dax C Used = No (OCCN)
Track 5 : Dax D Used = No (OCCN)
Track 5 : Dax E Used = No (OCCN)
Track 5 : Dax F Used = No (OCCN)
Track 5 : Dax G Used = No (OCCN)

GCP: track 1
Track 1 : GCP Freq Category = Standard (Field)
Track 1 : GCP Frequency = 211 Hz (Field, TCN)
Track 1 : Approach Distance = 1980 ft (Field, TCN)
Track 1 : Uni/Bi/Sim-Bidirni = Bidirni (OCCN, TCN)
Track 1 : GCP Transmit Level = High (Field, TCN)
Track 1 : Island Connection = Isl1 (OCCN)
Track 1 : Directionally Wired = No (OCCN)
Track 1 : Island Distance = 124 ft (Field, TCN)
Track 1 : Computed Distance = 9999 ft (Field, TCN)
Track 1 : Linearization Steps = 100  (Field, TCN)

GCP: track 1 enhanced det
Track 1 : Inbound PS Sensitivity = High (Field)
Track 1 : Speed Limiting Used = Yes (Field)
Track 1 : Outbound False Act Lvl = Normal (Field)
Track 1 : Outbound PS Timer = 20 sec (Field)
Track 1 : Trailing Switch Logic = On (Field)
Track 1 : Post Joint Detn Time = 15 sec (OCCN)
Track 1 : Adv Appr Predn = No (OCCN)
Track 1 : Cancel Pickup Delay = This Isl (OCCN)

GCP: track 1 BIDAX RX
Track 1 : BIDAX To RX Appr = Not Used (OCCN)

GCP: track 1 BIDAX TX
Track 1 : BIDAX To TX Appr = Not Used (OCCN)

GCP: track 1 prime
Track 1 : Prime Warning Time = 42 sec (OCCN)
Track 1 : Prime Offset Distance = 0 ft (Field)
Track 1 : Switch MS EZ Level = 14  (OCCN)
Track 1 : Prime MS/GCP Mode = Pred (OCCN)
Track 1 : Prime Pickup Delay = 30 sec (OCCN)
Track 1 : Prime UAX = IP (OCCN)
Track 1 : Prime UAX Pickup = 22 sec (OCCN)

GCP: track 1 pos start
Track 1 : Positive Start = Off (OCCN)
Track 1 : Sudden Shnt Det Used = No (OCCN)
Track 1 : Low EZ Detection Used = No (OCCN)

GCP: track 1 MS Control
Track 1 : MS/GCP Ctrl IP Used = No (OCCN)
Track 1 : MS Sensitivity Level = 0  (Field)
Track 1 : Compensation Level = 1300  (Field, TCN)
Track 1 : Warn Time-Ballast Comp = High (Field, TCN)
Track 1 : Low EX Adjustment = 39  (Field)
Track 1 : Bidirn Dax Passthru = No (OCCN)
Track 1 : False Act on Train Stop = No (Field)
Track 1 : EX Limiting Used = Yes (Field)
Track 1 : EZ Correction Used = Yes (Field)

GCP: track 2
Track 2 : GCP Freq Category = Standard (Field)
Track 2 : GCP Frequency = 348 Hz (Field, TCN)
Track 2 : Approach Distance = 1390 ft (Field, TCN)
Track 2 : Uni/Bi/Sim-Bidirni = Unidirni (OCCN, TCN)
Track 2 : GCP Transmit Level = High (Field, TCN)
Track 2 : Island Connection = Isl3 (OCCN)
Track 2 : Directionally Wired = No (OCCN)
Track 2 : Island Distance = 0 ft (Field, TCN)
Track 2 : Computed Distance = 9999 ft (Field, TCN)
Track 2 : Linearization Steps = 100  (Field, TCN)

GCP: track 2 enhanced det
Track 2 : Inbound PS Sensitivity = High (Field)
Track 2 : Speed Limiting Used = Yes (Field)
Track 2 : Outbound False Act Lvl = Normal (Field)
Track 2 : Outbound PS Timer = 20 sec (Field)
Track 2 : Trailing Switch Logic = On (Field)
Track 2 : Post Joint Detn Time = 15 sec (OCCN)
Track 2 : Adv Appr Predn = No (OCCN)
Track 2 : Cancel Pickup Delay = This Isl (OCCN)

GCP: track 2 BIDAX RX
Track 2 : BIDAX To RX Appr = Not Used (OCCN)

GCP: track 2 BIDAX TX
Track 2 : BIDAX To TX Appr = Not Used (OCCN)

GCP: track 2 prime
Track 2 : Prime Warning Time = 42 sec (OCCN)
Track 2 : Prime Offset Distance = 0 ft (Field)
Track 2 : Switch MS EZ Level = 20  (OCCN)
Track 2 : Prime MS/GCP Mode = Pred (OCCN)
Track 2 : Prime Pickup Delay = 30 sec (OCCN)
Track 2 : Prime UAX = Not Used (OCCN)

GCP: track 2 pos start
Track 2 : Positive Start = Off (OCCN)
Track 2 : Sudden Shnt Det Used = No (OCCN)
Track 2 : Low EZ Detection Used = No (OCCN)

GCP: track 2 MS Control
Track 2 : MS/GCP Ctrl IP Used = No (OCCN)
Track 2 : MS Sensitivity Level = 0  (Field)
Track 2 : Compensation Level = 1300  (Field, TCN)
Track 2 : Warn Time-Ballast Comp = High (Field, TCN)
Track 2 : Low EX Adjustment = 39  (Field)
Track 2 : Bidirn Dax Passthru = No (OCCN)
Track 2 : False Act on Train Stop = No (Field)
Track 2 : EX Limiting Used = Yes (Field)
Track 2 : EZ Correction Used = Yes (Field)

GCP: track 3
Track 3 : GCP Freq Category = Standard (Field)
Track 3 : GCP Frequency = 430 Hz (Field, TCN)
Track 3 : Approach Distance = 700 ft (Field, TCN)
Track 3 : Uni/Bi/Sim-Bidirni = Unidirni (OCCN, TCN)
Track 3 : GCP Transmit Level = High (Field, TCN)
Track 3 : Island Connection = Isl3 (OCCN)
Track 3 : Directionally Wired = No (OCCN)
Track 3 : Island Distance = 124 ft (Field, TCN)
Track 3 : Computed Distance = 9999 ft (Field, TCN)
Track 3 : Linearization Steps = 100  (Field, TCN)

GCP: track 3 enhanced det
Track 3 : Inbound PS Sensitivity = High (Field)
Track 3 : Speed Limiting Used = Yes (Field)
Track 3 : Outbound False Act Lvl = Normal (Field)
Track 3 : Outbound PS Timer = 20 sec (Field)
Track 3 : Trailing Switch Logic = On (Field)
Track 3 : Post Joint Detn Time = 15 sec (OCCN)
Track 3 : Adv Appr Predn = No (OCCN)
Track 3 : Cancel Pickup Delay = This Isl (OCCN)

GCP: track 3 BIDAX RX
Track 3 : BIDAX To RX Appr = Not Used (OCCN)

GCP: track 3 BIDAX TX
Track 3 : BIDAX To TX Appr = Not Used (OCCN)

GCP: track 3 prime
Track 3 : Prime Warning Time = 42 sec (OCCN)
Track 3 : Prime Offset Distance = 0 ft (Field)
Track 3 : Switch MS EZ Level = 37  (OCCN)
Track 3 : Prime MS/GCP Mode = Pred (OCCN)
Track 3 : Prime Pickup Delay = 30 sec (OCCN)
Track 3 : Prime UAX = Not Used (OCCN)

GCP: track 3 Dax A
Track 3 : Dax A Warning Time = 32 sec (OCCN)
Track 3 : Dax A Offset Distance = 399 ft (Field)
Track 3 : Switch MS EZ Level = 0  (OCCN)
Track 3 : Pickup Delay Mode = Auto (OCCN)
Track 3 : Dax A MS/GCP Mode = Pred (OCCN)
Track 3 : Dax A Pickup Delay = 8 sec (OCCN)
Track 3 : Dax A Enable = Not Used (OCCN)

GCP: track 3 pos start
Track 3 : Positive Start = Off (OCCN)
Track 3 : Sudden Shnt Det Used = No (OCCN)
Track 3 : Low EZ Detection Used = No (OCCN)

GCP: track 3 MS Control
Track 3 : MS/GCP Ctrl IP Used = No (OCCN)
Track 3 : MS Sensitivity Level = 0  (Field)
Track 3 : Compensation Level = 1300  (Field, TCN)
Track 3 : Warn Time-Ballast Comp = Low (Field, TCN)
Track 3 : Low EX Adjustment = 39  (Field)
Track 3 : Bidirn Dax Passthru = No (OCCN)
Track 3 : False Act on Train Stop = No (Field)
Track 3 : EX Limiting Used = Yes (Field)
Track 3 : EZ Correction Used = Yes (Field)

GCP: track 4
Track 4 : GCP Freq Category = Standard (Field)
Track 4 : GCP Frequency = 970 Hz (Field, TCN)
Track 4 : Approach Distance = 694 ft (Field, TCN)
Track 4 : Uni/Bi/Sim-Bidirni = Unidirni (OCCN, TCN)
Track 4 : GCP Transmit Level = High (Field, TCN)
Track 4 : Island Connection = Isl4 (OCCN)
Track 4 : Directionally Wired = No (OCCN)
Track 4 : Island Distance = 124 ft (Field, TCN)
Track 4 : Computed Distance = 9999 ft (Field, TCN)
Track 4 : Linearization Steps = 100  (Field, TCN)

GCP: track 4 enhanced det
Track 4 : Inbound PS Sensitivity = High (Field)
Track 4 : Speed Limiting Used = Yes (Field)
Track 4 : Outbound False Act Lvl = Normal (Field)
Track 4 : Outbound PS Timer = 20 sec (Field)
Track 4 : Trailing Switch Logic = On (Field)
Track 4 : Post Joint Detn Time = 15 sec (OCCN)
Track 4 : Adv Appr Predn = No (OCCN)
Track 4 : Cancel Pickup Delay = This Isl (OCCN)

GCP: track 4 BIDAX RX
Track 4 : BIDAX To RX Appr = Not Used (OCCN)

GCP: track 4 BIDAX TX
Track 4 : BIDAX To TX Appr = Not Used (OCCN)

GCP: track 4 prime
Track 4 : Prime Warning Time = 42 sec (OCCN)
Track 4 : Prime Offset Distance = 0 ft (Field)
Track 4 : Switch MS EZ Level = 37  (OCCN)
Track 4 : Prime MS/GCP Mode = Pred (OCCN)
Track 4 : Prime Pickup Delay = 30 sec (OCCN)
Track 4 : Prime UAX = Not Used (OCCN)

GCP: track 4 pos start
Track 4 : Positive Start = Off (OCCN)
Track 4 : Sudden Shnt Det Used = No (OCCN)
Track 4 : Low EZ Detection Used = No (OCCN)

GCP: track 4 MS Control
Track 4 : MS/GCP Ctrl IP Used = No (OCCN)
Track 4 : MS Sensitivity Level = 0  (Field)
Track 4 : Compensation Level = 1300  (Field, TCN)
Track 4 : Warn Time-Ballast Comp = High (Field, TCN)
Track 4 : Low EX Adjustment = 39  (Field)
Track 4 : Bidirn Dax Passthru = No (OCCN)
Track 4 : False Act on Train Stop = No (Field)
Track 4 : EX Limiting Used = Yes (Field)
Track 4 : EZ Correction Used = Yes (Field)

GCP: track 5
Track 5 : GCP Freq Category = Standard (Field)
Track 5 : GCP Frequency = 430 Hz (Field, TCN)
Track 5 : Approach Distance = 366 ft (Field, TCN)
Track 5 : Uni/Bi/Sim-Bidirni = Unidirni (OCCN, TCN)
Track 5 : GCP Transmit Level = High (Field, TCN)
Track 5 : Island Connection = Isl4 (OCCN)
Track 5 : Directionally Wired = No (OCCN)
Track 5 : Island Distance = 0 ft (Field, TCN)
Track 5 : Computed Distance = 9999 ft (Field, TCN)
Track 5 : Linearization Steps = 100  (Field, TCN)

GCP: track 5 enhanced det
Track 5 : Inbound PS Sensitivity = High (Field)
Track 5 : Speed Limiting Used = Yes (Field)
Track 5 : Outbound False Act Lvl = Normal (Field)
Track 5 : Outbound PS Timer = 20 sec (Field)
Track 5 : Trailing Switch Logic = On (Field)
Track 5 : Post Joint Detn Time = 15 sec (OCCN)
Track 5 : Adv Appr Predn = No (OCCN)
Track 5 : Cancel Pickup Delay = This Isl (OCCN)

GCP: track 5 BIDAX RX
Track 5 : BIDAX To RX Appr = Not Used (OCCN)

GCP: track 5 BIDAX TX
Track 5 : BIDAX To TX Appr = Not Used (OCCN)

GCP: track 5 prime
Track 5 : Prime Warning Time = 42 sec (OCCN)
Track 5 : Prime Offset Distance = 0 ft (Field)
Track 5 : Switch MS EZ Level = 70  (OCCN)
Track 5 : Prime MS/GCP Mode = Pred (OCCN)
Track 5 : Prime Pickup Delay = 30 sec (OCCN)
Track 5 : Prime UAX = Not Used (OCCN)

GCP: track 5 pos start
Track 5 : Positive Start = Off (OCCN)
Track 5 : Sudden Shnt Det Used = No (OCCN)
Track 5 : Low EZ Detection Used = No (OCCN)

GCP: track 5 MS Control
Track 5 : MS/GCP Ctrl IP Used = No (OCCN)
Track 5 : MS Sensitivity Level = 0  (Field)
Track 5 : Compensation Level = 1300  (Field, TCN)
Track 5 : Warn Time-Ballast Comp = Low (Field, TCN)
Track 5 : Low EX Adjustment = 39  (Field)
Track 5 : Bidirn Dax Passthru = No (OCCN)
Track 5 : False Act on Train Stop = No (Field)
Track 5 : EX Limiting Used = Yes (Field)
Track 5 : EZ Correction Used = Yes (Field)

ISLAND: track 1
Track 1 : Isl Frequency = 5.9 kHz (Field)
Track 1 : Pickup Delay (2s +) = 0 sec (OCCN)
Track 1 : Isl Enable IP Used = No (OCCN)

ISLAND: track 3
Track 3 : Isl Frequency = 10.0 kHz (Field)
Track 3 : Pickup Delay (2s +) = 0 sec (OCCN)
Track 3 : Isl Enable IP Used = No (OCCN)

ISLAND: track 4
Isl Enable Pickup Delay = 4 sec (OCCN)

AND: track Anding
AND 1 XR Used = Yes (OCCN)
AND 2 Used = Yes (OCCN)
AND 3 Used = No (OCCN)
AND 4 Used = No (OCCN)
AND 5 Used = No (OCCN)
AND 6 Used = No (OCCN)
AND 7 Used = No (OCCN)
AND 8 Used = No (OCCN)

AND: AND 1 XR
AND 1 XR Track 1 = Prime (OCCN)
AND 1 XR Track 2 = Prime (OCCN)
AND 1 XR Track 3 = Prime (OCCN)
AND 1 XR Track 4 = Prime (OCCN)
AND 1 XR Track 5 = Prime (OCCN)
AND 1 Enable Used = Yes (OCCN)
And 1 Enable Pickup = 0 sec (OCCN)
AND 1 Enable Drop = 0 sec (OCCN)
AND 1 Wrap Used = No (OCCN)

AND: AND 2
AND 2 Track 1 = Not Used (OCCN)
AND 2 Track 2 = Not Used (OCCN)
AND 2 Track 3 = Not Used (OCCN)
AND 2 Track 4 = Not Used (OCCN)
AND 2 Track 5 = Not Used (OCCN)
AND 2 Enable Used = Yes (OCCN)
AND 2 Enable Pickup = 0 sec (OCCN)
AND 2 Enable Drop = 0 sec (OCCN)
AND 2 Wrap Used = No (OCCN)

ADVANCED: MS restart
MS/GCP Restart Used = No (OCCN)

ADVANCED: out of service
OOS Control = OOS IPs (OCCN)

ADVANCED: out of service 2
T1 OOS Control = OOS Input 1 (OCCN)
T2 OOS Control = OOS Input 2 (OCCN)
T3 OOS Control = OOS Input 2 (OCCN)
T4 OOS Control = OOS Input 3 (OCCN)
T5 OOS Control = OOS Input 3 (OCCN)
T1 OOS Controls = GCP and Island (OCCN)
T2 OOS Controls = GCP Only (OCCN)
T3 OOS Controls = GCP and Island (OCCN)
T4 OOS Controls = GCP and Island (OCCN)
T5 OOS Controls = GCP Only (OCCN)

ADVANCED: track wrap circuits
Wrap LOS Timer = 5 sec (OCCN)
Track 1 Wrap Used = No (OCCN)
Track 2 Wrap Used = No (OCCN)
Track 3 Wrap Used = No (OCCN)
Track 4 Wrap Used = No (OCCN)
Track 5 Wrap Used = No (OCCN)
```

CONT'D ON SHEET 04

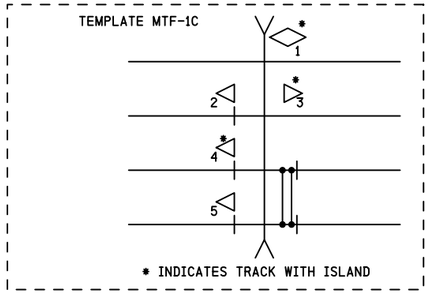

NOTES

1) DISTANCE(S) TO BE VERIFIED AT INSTALLATION
   INDICATE SELECTED PROGRAMMED VALUE IF DIFFERENT THAN SHOWN
   REFER TO 4000 GCP INSTRUCTION/INSTALLATION MANUAL
   FOR PROGRAMMING PARAMETERS

2) PROGRAM TEXT HIGHLIGHTED IN RED INDICATES 4000 PROGRAM
   MODIFICATIONS TO DEFAULT PROGRAM VALUES

3) EACH CONSTANT WARNING DEVICE SYSTEM TO BE PROGRAMMED TO
   CONVERT TO A MOTION SENSOR 300 FEET FROM EDGE OF ROAD
   TRAVELLED WAY
   SHUNT TRACK 300 FEET FROM EDGE OF ROAD TRAVELLED WAY
   AND NOTE "EZ" VALUE
   PROGRAM EACH SYSTEM WITH THE INDICATED "EZ" VALUE +2

4) VERIFY SET TIMER VALUE TO MATCH ACTUAL TRAIN MOVEMENT
   WITHIN THE CROSSING APPROACH CIRCUITS

SII 08 JAN 2015

PROPOSED
DESIGN NO. 14-0069
RED-IN YELLOW-OUT

AS INSTALLED
DATE _____
BY _____
(PRINT NAME)

PROPOSED D	PROPOSED M	PROPOSED Y	REVISIONS	D	C	COMPLETED D	COMPLETED M	COMPLETED Y	C
08	01	15	TRACK CIRCUITS ADDED	NDH	MRB				

REGION SOUTHERN
SUB. CHICAGO 340
CN

SIGNALS AND COMMUNICATIONS HOMEWOOD
DES. NDH
08 JANUARY 2015
CH. MRB

GCP 4000
PROGRAM INFORMATION
GILMAN, IL
2ND STREET

CHI-081.00-03

DOT#288 987G

chi-081.00-03.dgn
15-APR-2015

SIEMENS INDUSTRY INC

DES.: NDH	DATE: 19/06/14	JOB NO.: JXXD03603	
CKD.: MRB	ISSUE DATE: N/A	EST. NO.: XP-7262	
DRN.: NDH	PLAN NO.: N/A	SHEET 3 OF 22	
P TIME: 15:44	P DATE: 15-APR-2015	CAD ID.: CHI-081.00-03	

SIEMENS INDUSTRY INC
LOUISVILLE DIVISION, LOUISVILLE, KY

REVISIONS				
NO.	DATE	BY	DESCRIPTION	APP. BY
1				
2				
3				
4				
5				

Program Report

Location and SIN

DOT Number: 288987G
Milepost Number: 081.00
Site Name: 2ND STREET

SIN: 762010010016

MCF and Template Selection

MCF Name: GCP-T6X-02-2.mcf
MCF Revision: 022
MCFCRC: 79225F13

Template = 1D:3 Uni pairs (OCCN)

Check Numbers

Office Check Number: 7D325E89 47254CAB
Config. Check Number: 44054F00 54164DB5
(Based on MCF Revision 022)

Program

BASIC: module configuration
Track 1/PSO 1 Slot = Track (OCCN)
Track 2/RIO 1 Slot = Track (OCCN)
Track 3/PSO 2 Slot = Track (OCCN)
Track 4/PSO 3 Slot = Track (OCCN)
Track 5/RIO 2 Slot = Track (OCCN) Not Used (OCCN)
Track 6/RIO 3 Slot = Track (OCCN) Not Used (OCCN)
SSCC-1 Slot = SSCC3I (OCCN)
SSCC-2 Slot = SSCC3I (OCCN)
SEAR Used = Yes (OCCN)

BASIC: MS/GCP operation
Track 1 : MS/GCP Operation = Yes (OCCN)
Track 2 : MS/GCP Operation = Yes (OCCN)
Track 3 : MS/GCP Operation = Yes (OCCN)
Track 4 : MS/GCP Operation = Yes (OCCN)
Track 5 : MS/GCP Operation = Yes (OCCN)
Track 6 : MS/GCP Operation = Yes (OCCN)

BASIC: Island operation
Track 1 : Island Used = Internal(OCCN)
Track 2 : Island Used = No (OCCN)
Track 3 : Island Used = Internal(OCCN)
Track 4 : Island Used = No (OCCN)
Track 5 : Island Used = External(OCCN)
Track 6 : Island Used = No (OCCN)

BASIC: preemption
Preempt Logic = No (OCCN)

BASIC: radio Dax links
Radio DAX link A Used = No (OCCN)
Radio DAX link B Used = No (OCCN)

BASIC: Vital Comms links
Vital Comms link 1 Used = No (OCCN)
Vital Comms link 2 Used = No (OCCN)

PREDICTORS: track 1
Track 1 : Prime Used = Yes (OCCN)
Track 1 : Dax A Used = Yes (OCCN)
Track 1 : Dax B Used = Yes (OCCN)
Track 1 : Dax C Used = No (OCCN)
Track 1 : Dax D Used = No (OCCN)
Track 1 : Dax E Used = No (OCCN)
Track 1 : Dax F Used = No (OCCN)
Track 1 : Dax G Used = No (OCCN)

PREDICTORS: track 2
Track 2 : Prime Used = Yes (OCCN)
Track 2 : Dax A Used = Yes (OCCN)
Track 2 : Dax B Used = No (OCCN)
Track 2 : Dax C Used = No (OCCN)
Track 2 : Dax D Used = No (OCCN)
Track 2 : Dax E Used = No (OCCN)
Track 2 : Dax F Used = No (OCCN)
Track 2 : Dax G Used = No (OCCN)

PREDICTORS: track 3
Track 3 : Prime Used = Yes (OCCN)
Track 3 : Dax A Used = Yes (OCCN)
Track 3 : Dax B Used = No (OCCN)
Track 3 : Dax C Used = No (OCCN)
Track 3 : Dax D Used = No (OCCN)
Track 3 : Dax E Used = No (OCCN)
Track 3 : Dax F Used = No (OCCN)
Track 3 : Dax G Used = No (OCCN)

PREDICTORS: track 4
Track 4 : Prime Used = Yes (OCCN)
Track 4 : Dax A Used = No (OCCN)
Track 4 : Dax B Used = No (OCCN)
Track 4 : Dax C Used = No (OCCN)
Track 4 : Dax D Used = No (OCCN)
Track 4 : Dax E Used = No (OCCN)
Track 4 : Dax F Used = No (OCCN)
Track 4 : Dax G Used = No (OCCN)

PREDICTORS: track 5
Track 5 : Prime Used = Yes (OCCN)
Track 5 : Dax A Used = No (OCCN)
Track 5 : Dax B Used = No (OCCN)
Track 5 : Dax C Used = No (OCCN)
Track 5 : Dax D Used = No (OCCN)
Track 5 : Dax E Used = No (OCCN)
Track 5 : Dax F Used = No (OCCN)
Track 5 : Dax G Used = No (OCCN)

PREDICTORS: track 6
Track 6 : Prime Used = Yes (OCCN)
Track 6 : Dax A Used = No (OCCN)
Track 6 : Dax B Used = No (OCCN)
Track 6 : Dax C Used = No (OCCN)
Track 6 : Dax D Used = No (OCCN)
Track 6 : Dax E Used = No (OCCN)
Track 6 : Dax F Used = No (OCCN)
Track 6 : Dax G Used = No (OCCN)

GCP: track 1
Track 1 : GCP Freq Category = Standard (Field)
Track 1 : GCP Frequency = 285 Hz (Field,TCN)
Track 1 : Approach Distance = 1980 ft (Field,TCN)
Track 1 : Uni/Bi/Sim-Bidirni = Unidirni(OCCN,TCN)
Track 1 : GCP Transmit Level = High (Field,TCN)
Track 1 : Island Connection = Isl1 (OCCN)
Track 1 : Directionally Wired = No (OCCN)
Track 1 : Island Distance = 124 ft (Field,TCN)
Track 1 : Computed Distance = 9999 ft (Field,TCN)
Track 1 : Linearization Steps = 100 (Field,TCN)

GCP: track 1 enhanced det
Track 1 : Inbound PS Sensitivity = High (Field)
Track 1 : Speed Limiting Used = Yes (Field)
Track 1 : Outbound False Act Lvl = Normal(Field)
Track 1 : Outbound PS Timer = 20 sec (Field)
Track 1 : Trailing Switch Logic = On (Field)
Track 1 : Post Joint Detn Time = 15 sec (OCCN)
Track 1 : Adv Appr Predn = No (OCCN)
Track 1 : Cancel Pickup Delay = This Isl(OCCN)

GCP: track 1 BIDAX RX
Track 1 : BIDAX To RX Appr = Not Used (OCCN)

GCP: track 1 BIDAX TX
Track 1 : BIDAX To TX Appr = Not Used (OCCN)

GCP: track 1 prime
Track 1 : Prime Warning Time = 42 sec (OCCN)
Track 1 : Prime Offset Distance = 0 ft (Field)
Track 1 : Switch MS EZ Level = 14 (OCCN)
Track 1 : Prime MS/GCP Mode = Pred (OCCN)
Track 1 : Prime Pickup Delay = 30 sec (OCCN)
Track 1 : Prime UAX = IP (OCCN)
Track 1 : Prime UAX Pickup = 22 sec (OCCN)

GCP: track 1 Dax A
Track 1 : Dax A Warning Time = 32 sec (OCCN)
Track 1 : Dax A Offset Distance = 559 ft (Field)
Track 1 : Switch MS EZ Level = 0 (OCCN)
Track 1 : Pickup Delay Mode = Auto (OCCN)
Track 1 : Dax A MS/GCP Mode = Pred (OCCN)
Track 1 : Dax A Pickup Delay = 8 sec (OCCN)
Track 1 : Dax A Enable = IP (OCCN)
Track 1 : Dax A Enable Pickup = 2 sec (OCCN)

GCP: track 1 Dax B
Track 1 : Dax B Warning Time = 34 sec (OCCN)
Track 1 : Dax B Offset Distance = 1929 ft (Field)
Track 1 : Switch MS EZ Level = 0 (OCCN)
Track 1 : Pickup Delay Mode = Auto (OCCN)
Track 1 : Dax B MS/GCP Mode = Pred (OCCN)
Track 1 : Dax B Pickup Delay = 8 sec (OCCN)
Track 1 : Dax B Enable = IP (OCCN)
Track 1 : Dax B Enable Pickup = 2 sec (OCCN)

GCP: track 1 pos start
Track 1 : Positive Start = Off (OCCN)
Track 1 : Sudden Shnt Det Used = No (OCCN)
Track 1 : Low EZ Detection Used = No (OCCN)

GCP: track 1 MS Control
Track 1 : MS/GCP Ctrl IP Used = No (OCCN)
Track 1 : MS Sensitivity Level = 0 (Field)
Track 1 : Compensation Level = 1300 (Field,TCN)
Track 1 : Warn Time-Ballast Comp = High (Field,TCN)
Track 1 : Low EX Adjustment = 39 (Field)
Track 1 : Bidirn Dax Passthru = No (OCCN)
Track 1 : False Act on Train Stop = No (Field)
Track 1 : EX Limiting Used = Yes (Field)
Track 1 : EZ Correction Used = Yes (Field)

GCP: track 2
Track 2 : GCP Freq Category = Standard (Field)
Track 2 : GCP Frequency = 348 Hz (Field,TCN)
Track 2 : Approach Distance = 1598 ft (Field,TCN)
Track 2 : Uni/Bi/Sim-Bidirni = Unidirni(OCCN,TCN)
Track 2 : GCP Transmit Level = High (Field,TCN)
Track 2 : Island Connection = Isl1 (OCCN)
Track 2 : Directionally Wired = No (OCCN)
Track 2 : Island Distance = 0 ft (Field,TCN)
Track 2 : Computed Distance = 9999 ft (Field,TCN)
Track 2 : Linearization Steps = 100 (Field,TCN)

GCP: track 2 enhanced det
Track 2 : Inbound PS Sensitivity = High (Field)
Track 2 : Speed Limiting Used = Yes (Field)
Track 2 : Outbound False Act Lvl = Normal(Field)
Track 2 : Outbound PS Timer = 20 sec (Field)
Track 2 : Trailing Switch Logic = On (Field)
Track 2 : Post Joint Detn Time = 15 sec (OCCN)
Track 2 : Adv Appr Predn = No (OCCN)
Track 2 : Cancel Pickup Delay = This Isl(OCCN)

GCP: track 2 BIDAX RX
Track 2 : BIDAX To RX Appr = Not Used (OCCN)

GCP: track 2 BIDAX TX
Track 2 : BIDAX To TX Appr = Not Used (OCCN)

GCP: track 2 prime
Track 2 : Prime Warning Time = 42 sec (OCCN)
Track 2 : Prime Offset Distance = 0 ft (Field)
Track 2 : Switch MS EZ Level = 17 (OCCN)
Track 2 : Prime MS/GCP Mode = Pred (OCCN)
Track 2 : Prime Pickup Delay = 30 sec (OCCN)
Track 2 : Prime UAX = IP (OCCN)
Track 2 : Prime UAX Pickup = 22 sec (OCCN)

GCP: track 2 Dax A
Track 2 : Dax A Warning Time = 33 sec (OCCN)
Track 2 : Dax A Offset Distance = 1178 ft (Field)
Track 2 : Switch MS EZ Level = 0 (OCCN)
Track 2 : Pickup Delay Mode = Auto (OCCN)
Track 2 : Dax A MS/GCP Mode = Pred (OCCN)
Track 2 : Dax A Pickup Delay = 8 sec (OCCN)
Track 2 : Dax A Enable = IP (OCCN)
Track 2 : Dax A Enable Pickup = 2 sec (OCCN)

GCP: track 2 pos start
Track 2 : Positive Start = Off (OCCN)
Track 2 : Sudden Shnt Det Used = No (OCCN)
Track 2 : Low EZ Detection Used = No (OCCN)

GCP: track 2 MS Control
Track 2 : MS/GCP Ctrl IP Used = No (OCCN)
Track 2 : MS Sensitivity Level = 0 (Field)
Track 2 : Compensation Level = 1300 (Field,TCN)
Track 2 : Warn Time-Ballast Comp = Low (Field,TCN)
Track 2 : Low EX Adjustment = 39 (Field)
Track 2 : Bidirn Dax Passthru = No (OCCN)
Track 2 : False Act on Train Stop = No (Field)
Track 2 : EX Limiting Used = Yes (Field)
Track 2 : EZ Correction Used = Yes (Field)

GCP: track 3
Track 3 : GCP Freq Category = Standard (Field)
Track 3 : GCP Frequency = 525 Hz (Field,TCN)
Track 3 : Approach Distance = 700 ft (Field,TCN)
Track 3 : Uni/Bi/Sim-Bidirni = Unidirni(OCCN,TCN)
Track 3 : GCP Transmit Level = High (Field,TCN)
Track 3 : Island Connection = Isl3 (OCCN)
Track 3 : Directionally Wired = No (OCCN)
Track 3 : Island Distance = 124 ft (Field,TCN)
Track 3 : Computed Distance = 9999 ft (Field,TCN)
Track 3 : Linearization Steps = 100 (Field,TCN)

GCP: track 3 enhanced det
Track 3 : Inbound PS Sensitivity = High (Field)
Track 3 : Speed Limiting Used = Yes (Field)
Track 3 : Outbound False Act Lvl = Normal(Field)
Track 3 : Outbound PS Timer = 20 sec (Field)
Track 3 : Trailing Switch Logic = On (Field)
Track 3 : Post Joint Detn Time = 15 sec (OCCN)
Track 3 : Adv Appr Predn = No (OCCN)
Track 3 : Cancel Pickup Delay = This Isl(OCCN)

GCP: track 3 BIDAX RX
Track 3 : BIDAX To RX Appr = Not Used (OCCN)

GCP: track 3 BIDAX TX
Track 3 : BIDAX To TX Appr = Not Used (OCCN)

GCP: track 3 prime
Track 3 : Prime Warning Time = 42 sec (OCCN)
Track 3 : Prime Offset Distance = 0 ft (Field)
Track 3 : Switch MS EZ Level = 37 (OCCN)
Track 3 : Prime MS/GCP Mode = Pred (OCCN)
Track 3 : Prime Pickup Delay = 30 sec (OCCN)
Track 3 : Prime UAX = Not Used (OCCN)

GCP: track 3 Dax A
Track 3 : Dax A Warning Time = 32 sec (OCCN)
Track 3 : Dax A Offset Distance = 559 ft (Field)
Track 3 : Switch MS EZ Level = 0 (OCCN)
Track 3 : Pickup Delay Mode = Auto (OCCN)
Track 3 : Dax A MS/GCP Mode = Pred (OCCN)
Track 3 : Dax A Pickup Delay = 8 sec (OCCN)
Track 3 : Dax A Enable = Not Used (OCCN)

GCP: track 3 pos start
Track 3 : Positive Start = Off (OCCN)
Track 3 : Sudden Shnt Det Used = No (OCCN)
Track 3 : Low EZ Detection Used = No (OCCN)

GCP: track 3 MS Control
Track 3 : MS/GCP Ctrl IP Used = No (OCCN)
Track 3 : MS Sensitivity Level = 0 (Field)
Track 3 : Compensation Level = 1300 (Field,TCN)
Track 3 : Warn Time-Ballast Comp = High (Field,TCN)
Track 3 : Low EX Adjustment = 39 (Field)
Track 3 : Bidirn Dax Passthru = No (OCCN)
Track 3 : False Act on Train Stop = No (Field)
Track 3 : EX Limiting Used = Yes (Field)
Track 3 : EZ Correction Used = Yes (Field)

GCP: track 4
Track 4 : GCP Freq Category = Standard (Field)
Track 4 : GCP Frequency = 645 Hz (Field,TCN)
Track 4 : Approach Distance = 1598 ft (Field,TCN)
Track 4 : Uni/Bi/Sim-Bidirni = Unidirni(OCCN,TCN)
Track 4 : GCP Transmit Level = High (Field,TCN)
Track 4 : Island Connection = Isl3 (OCCN)
Track 4 : Directionally Wired = No (OCCN)
Track 4 : Island Distance = 0 ft (Field,TCN)
Track 4 : Computed Distance = 9999 ft (Field,TCN)
Track 4 : Linearization Steps = 100 (Field,TCN)

GCP: track 4 enhanced det
Track 4 : Inbound PS Sensitivity = High (Field)
Track 4 : Speed Limiting Used = Yes (Field)
Track 4 : Outbound False Act Lvl = Normal(Field)
Track 4 : Outbound PS Timer = 20 sec (Field)
Track 4 : Trailing Switch Logic = On (Field)
Track 4 : Post Joint Detn Time = 15 sec (OCCN)
Track 4 : Adv Appr Predn = No (OCCN)
Track 4 : Cancel Pickup Delay = This Isl(OCCN)

GCP: track 4 BIDAX RX
Track 4 : BIDAX To RX Appr = Not Used (OCCN)

GCP: track 4 BIDAX TX
Track 4 : BIDAX To TX Appr = Not Used (OCCN)

GCP: track 4 prime
Track 4 : Prime Warning Time = 42 sec (OCCN)
Track 4 : Prime Offset Distance = 0 ft (Field)
Track 4 : Switch MS EZ Level = 17 (OCCN)
Track 4 : Prime MS/GCP Mode = Pred (OCCN)
Track 4 : Prime Pickup Delay = 30 sec (OCCN)
Track 4 : Prime UAX = IP (OCCN)
Track 4 : Prime UAX Pickup = 22 sec (OCCN)

GCP: track 4 pos start
Track 4 : Positive Start = Off (OCCN)
Track 4 : Sudden Shnt Det Used = No (OCCN)
Track 4 : Low EZ Detection Used = No (OCCN)

GCP: track 4 MS Control
Track 4 : MS/GCP Ctrl IP Used = No (OCCN)
Track 4 : MS Sensitivity Level = 0 (Field)
Track 4 : Compensation Level = 1300 (Field,TCN)
Track 4 : Warn Time-Ballast Comp = Low (Field,TCN)
Track 4 : Low EX Adjustment = 39 (Field)
Track 4 : Bidirn Dax Passthru = No (OCCN)
Track 4 : False Act on Train Stop = No (Field)
Track 4 : EX Limiting Used = Yes (Field)
Track 4 : EZ Correction Used = Yes (Field)

GCP: track 5
Track 5 : GCP Freq Category = Standard (Field)
Track 5 : GCP Frequency = 970 Hz (Field,TCN)
Track 5 : Approach Distance = 706 ft (Field,TCN)
Track 5 : Uni/Bi/Sim-Bidirni = Unidirni(OCCN,TCN)
Track 5 : GCP Transmit Level = High (Field,TCN)
Track 5 : Island Connection = Isl5 (OCCN)
Track 5 : Directionally Wired = No (OCCN)
Track 5 : Island Distance = 124 ft (Field,TCN)
Track 5 : Computed Distance = 9999 ft (Field,TCN)
Track 5 : Linearization Steps = 100 (Field,TCN)

GCP: track 5 enhanced det
Track 5 : Inbound PS Sensitivity = High (Field)
Track 5 : Speed Limiting Used = Yes (Field)
Track 5 : Outbound False Act Lvl = Normal(Field)
Track 5 : Outbound PS Timer = 20 sec (Field)
Track 5 : Trailing Switch Logic = On (Field)
Track 5 : Post Joint Detn Time = 15 sec (OCCN)
Track 5 : Adv Appr Predn = No (OCCN)
Track 5 : Cancel Pickup Delay = This Isl(OCCN)

GCP: track 5 BIDAX RX
Track 5 : BIDAX To RX Appr = Not Used (OCCN)

GCP: track 5 BIDAX TX
Track 5 : BIDAX To TX Appr = Not Used (OCCN)

GCP: track 5 prime
Track 5 : Prime Warning Time = 42 sec (OCCN)
Track 5 : Prime Offset Distance = 0 ft (Field)
Track 5 : Switch MS EZ Level = 37 (OCCN)
Track 5 : Prime MS/GCP Mode = Pred (OCCN)
Track 5 : Prime Pickup Delay = 30 sec (OCCN)
Track 5 : Prime UAX = Not Used (OCCN)

GCP: track 5 pos start
Track 5 : Positive Start = Off (OCCN)
Track 5 : Sudden Shnt Det Used = No (OCCN)
Track 5 : Low EZ Detection Used = No (OCCN)

GCP: track 5 MS Control
Track 5 : MS/GCP Ctrl IP Used = No (OCCN)
Track 5 : MS Sensitivity Level = 0 (Field)
Track 5 : Compensation Level = 1300 (Field,TCN)
Track 5 : Warn Time-Ballast Comp = High (Field,TCN)
Track 5 : Low EX Adjustment = 39 (Field)
Track 5 : Bidirn Dax Passthru = No (OCCN)
Track 5 : False Act on Train Stop = No (Field)
Track 5 : EX Limiting Used = Yes (Field)
Track 5 : EZ Correction Used = Yes (Field)

GCP: track 6
Track 6 : GCP Freq Category = Standard (Field)
Track 6 : GCP Frequency = 790 Hz (Field,TCN)
Track 6 : Approach Distance = 566 ft (Field,TCN)
Track 6 : Uni/Bi/Sim-Bidirni = Unidirni(OCCN,TCN)
Track 6 : GCP Transmit Level = High (Field,TCN)
Track 6 : Island Connection = Isl5 (OCCN)
Track 6 : Directionally Wired = No (OCCN)
Track 6 : Island Distance = 124 ft (Field,TCN)
Track 6 : Computed Distance = 9999 ft (Field,TCN)
Track 6 : Linearization Steps = 100 (Field,TCN)

GCP: track 6 enhanced det
Track 6 : Inbound PS Sensitivity = High (Field)
Track 6 : Speed Limiting Used = Yes (Field)
Track 6 : Outbound False Act Lvl = Normal(Field)
Track 6 : Outbound PS Timer = 20 sec (Field)
Track 6 : Trailing Switch Logic = On (Field)
Track 6 : Post Joint Detn Time = 15 sec (OCCN)
Track 6 : Adv Appr Predn = No (OCCN)
Track 6 : Cancel Pickup Delay = This Isl(OCCN)

GCP: track 6 BIDAX RX
Track 6 : BIDAX To RX Appr = Not Used (OCCN)

GCP: track 6 BIDAX TX
Track 6 : BIDAX To TX Appr = Not Used (OCCN)

GCP: track 6 prime
Track 6 : Prime Warning Time = 42 sec (OCCN)
Track 6 : Prime Offset Distance = 0 ft (Field)
Track 6 : Switch MS EZ Level = 46 (OCCN)
Track 6 : Prime MS/GCP Mode = Pred (OCCN)
Track 6 : Prime Pickup Delay = 30 sec (OCCN)
Track 6 : Prime UAX = Not Used (OCCN)

GCP: track 6 pos start
Track 6 : Positive Start = Off (OCCN)
Track 6 : Sudden Shnt Det Used = No (OCCN)
Track 6 : Low EZ Detection Used = No (OCCN)

GCP: track 6 MS Control
Track 6 : MS/GCP Ctrl IP Used = No (OCCN)
Track 6 : MS Sensitivity Level = 0 (Field)
Track 6 : Compensation Level = 1300 (Field,TCN)
Track 6 : Warn Time-Ballast Comp = Low (Field,TCN)
Track 6 : Low EX Adjustment = 39 (Field)
Track 6 : Bidirn Dax Passthru = No (OCCN)
Track 6 : False Act on Train Stop = No (Field)
Track 6 : EX Limiting Used = Yes (Field)
Track 6 : EZ Correction Used = Yes (Field)

CONT'D ON SHEET 04

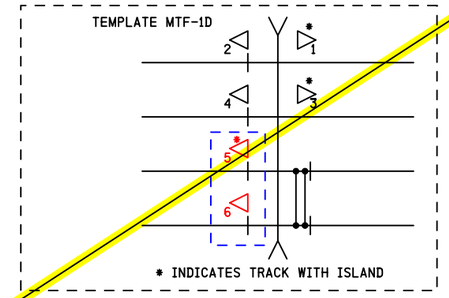

NOTES
1) DISTANCE(S) TO BE VERIFIED AT INSTALLATION INDICATE SELECTED PROGRAMMED VALUE IF DIFFERENT THAN SHOWN REFER TO 4000 GCP INSTRUCTION/INSTALLATION MANUAL FOR PROGRAMMING PARAMETERS
2) PROGRAM TEXT HIGHLIGHTED IN RED INDICATES 4000 PROGRAM MODIFICATIONS TO DEFAULT PROGRAM VALUES
3) EACH CONSTANT WARNING DEVICE SYSTEM TO BE PROGRAMMED TO CONVERT TO A MOTION SENSOR 300 FEET FROM EDGE OF ROAD TRAVELLED WAY SHUNT TRACK 300 FEET FROM EDGE OF ROAD TRAVELLED WAY AND NOTE "EZ" VALUE PROGRAM EACH SYSTEM WITH THE INDICATED "EZ" VALUE +2
4) VERIFY SET TIMER VALUE TO MATCH ACTUAL TRAIN MOVEMENT WITHIN THE CROSSING APPROACH CIRCUITS

OBSOLETE
08/01/15
DESIGN# 14-0069
SII

DENOTES PROPOSAL 14-0069
REVISION 08/01/15

SII 08 JAN 2015
SII 19 JUN 2014

PROPOSED
DESIGN NO. 14-0069
RED-IN YELLOW-OUT

AS INSTALLED
DATE _____
BY _____
(PRINT NAME)

PROPOSED D	M	Y	REVISIONS	D	C	COMPLETED D	M	Y	C
08	01	15	TRK CIRCUITS ADDED	NAD	MRB				

REGION SOUTHERN
SUB. CHICAGO 340
SIGNALS AND COMMUNICATIONS HOMEWOOD
DES. NDH
19 JUNE 2014
CH. MRB
GCP 4000
PROGRAM INFORMATION
GILMAN, IL
2ND STREET
CHI-081.00-03X

SIEMENS INDUSTRY INC

DES. : NDH	DATE: 19/06/14	JOB NO. : UXXD03603	
CKD. : MRB	ISSUE DATE: N/A	EST. NO. : XP-7262	
DRN. : NDH	PLAN NO. : N/A	SHEET 3 OF 22	
P. TIME: 15:44	P. DATE: 15-APR-2015	CAD ID. : CHI-081.00-03	

SIEMENS INDUSTRY INC
LOUISVILLE DIVISION, LOUISVILLE, KY

chi-081.00-03x.dgn
15-APR-2015

DOT# 288 987G

CONT'D ON
SHEET 03

```
ADVANCED:  trk 1 overrides
Track 1 : All Predictors Override Used = No (OCCN)

ADVANCED:  trk 2 overrides
Track 2 : All Predictors Override Used = No (OCCN)

ADVANCED:  trk 3 overrides
Track 3 : All Predictors Override Used = No (OCCN)
Track 3 : Dax A Override Used = No (OCCN)

ADVANCED:  trk 4 overrides
Track 4 : All Predictors Override Used = No (OCCN)

ADVANCED:  trk 5 overrides
Track 5 : All Predictors Override Used = No (OCCN)

ADVANCED:  OR logic
OR 1 Used = No (OCCN)
OR 2 Used = No (OCCN)
OR 3 Used = No (OCCN)
OR 4 Used = No (OCCN)

ADVANCED:  Internal I/O 1
Pass Thrus = Yes (OCCN)
Int.1 Sets = AND 2 Enable (OCCN)
Int.1 Set by = Passthru State 1 (OCCN)
Int.2 Sets = AND 2 Enable (OCCN)
Int.2 Set by = Passthru State 2 (OCCN)
Int.3 Sets = GD 1.1 (OCCN)
Int.3 Set by = Passthru State 1 (OCCN)
Int.4 Sets = GD 2.1 (OCCN)
Int.4 Set by = Passthru State 2 (OCCN)

ADVANCED:  Internal I/O 2
Int.5 Sets = Not Used (OCCN)
Int.5 Set by = Not Used (OCCN)
Int.6 Sets = Not Used (OCCN)
Int.6 Set by = Not Used (OCCN)
Int.7 Sets = Not Used (OCCN)
Int.7 Set by = Not Used (OCCN)
Int.8 Sets = Not Used (OCCN)
Int.8 Set by = Not Used (OCCN)

ADVANCED:  Internal I/O 3
Int.9 Sets = Not Used (OCCN)
Int.9 Set by = Not Used (OCCN)
Int.10 Sets = Not Used (OCCN)
Int.10 Set by = Not Used (OCCN)
Int.11 Sets = Not Used (OCCN)
Int.11 Set by = Not Used (OCCN)
Int.12 Sets = Not Used (OCCN)
Int.12 Set by = Not Used (OCCN)

ADVANCED:  Internal I/O 4
Int.13 Sets = Not Used (OCCN)
Int.13 Set by = Not Used (OCCN)
Int.14 Sets = Not Used (OCCN)
Int.14 Set by = Not Used (OCCN)
Int.15 Sets = Not Used (OCCN)
Int.15 Set by = Not Used (OCCN)
Int.16 Sets = Not Used (OCCN)
Int.16 Set by = Not Used (OCCN)

ADVANCED:  site options
Daylight Savings = On (Field)
Units = Standard (OCCN)
Maint CallRpt IP Used = No (OCCN)
Emergency Activate IP = No (OCCN)
EZ/EX Logging = Change (Field)
EZ/EX Point Change = 3   (Field)

SSCC
Gates Used = Yes (OCCN)
SSCC1+2 GPs Coupled = Yes (OCCN)
Min Activation = 32 sec (OCCN)
Rmt Activation Cancel= 3 min (OCCN)
Bell On Gate Rising = No (OCCN)
Mute Bell On Gate Down = Yes (OCCN)
SSCCIV Controller Used = No (OCCN)

SSCC:  1
SSCC-1 Activation = AND 1 XR (OCCN)
SSCC-1 Gate Delay = 4 sec (OCCN)
SSCC-1 Number of GPs = 1 (OCCN)
SSCC-1 Number of GDs = 1 (OCCN)
SSCC 1 : Flash Rate = 55 (OCCN)
SSCC 1 : Low Battery Detection = No (Field)
SSCC 1 : Flash Sync = master (OCCN)
SSCC 1 : Invert Gate Output = No (OCCN)
SSCC 1 : Lamp Neutral Test = Off (Field)
Aux-1 Xng Ctrl Used = No (OCCN)

SSCC:  2
SSCC-2 Activation = AND 1 XR (OCCN)
SSCC-2 Gate Delay = 4 sec (OCCN)
SSCC-2 Number of GPs = 0 (OCCN)
SSCC-2 Number of GDs = 1 (OCCN)
SSCC 2 : Flash Rate = 55 (OCCN)
SSCC 2 : Low Battery Detection = No (Field)
SSCC 2 : Flash Sync = slave (OCCN)
SSCC 2 : Invert Gate Output = No (OCCN)
SSCC 2 : Lamp Neutral Test = Off (Field)
Aux-2 Xng Ctrl Used = No (OCCN)
```

```
OUTPUT:  assignment page 1
OUT 1.1 = Not Used (OCCN)
OUT 1.2 = Not Used (OCCN)
OUT 2.1 = Not Used (OCCN)
OUT 2.2 = Not Used (OCCN)
OUT 3.1 = T3 Dax A (OCCN)
OUT 3.2 = Not Used (OCCN)

OUTPUT:  assignment page 2
OUT 4.1 = AND 1 XR (OCCN)
OUT 4.2 = AND 2 (OCCN)
OUT 5.1 = Not Used (OCCN)
OUT 5.2 = Not Used (OCCN)

INPUT:  assignment page 1
IN 1.1 = T1 Prime UAX (OCCN)
IN 1.2 = T1 Prime UAX (OCCN)
IN 2.1 = Not Used (OCCN)
IN 2.2 = Not Used (OCCN)
IN 3.1 = Not Used (OCCN)
IN 3.2 = Isl 4 Enable (OCCN)

INPUT:  assignment page 2
IN 4.1 = Not Used (OCCN)
IN 4.2 = T1 Prime UAX (OCCN)
IN 5.1 = Out Of Service IP 3 (OCCN)
IN 5.2 = Not Used (OCCN)

IO:  assignment SSCC
OUT GC 1 = Gate Output 1 (OCCN)
OUT GC 2 = Gate Output 2 (OCCN)
IN 7.1 = AND 1 XR Enable (OCCN)
IN 7.2 = Not Used (OCCN)
IN 7.3 = Not Used (OCCN)
IN 7.4 = Passthru State 1 (OCCN)
IN 7.5 = GP 1.1 (OCCN)
IN 8.1 = Out Of Service IP 1 (OCCN)
IN 8.2 = Out Of Service IP 2 (OCCN)
IN 8.3 = Not Used (OCCN)
IN 8.4 = Passthru State 2 (OCCN)
IN 8.5 = Not Used (OCCN)

SEAR
SEAR Subnode = 99   (OCCN)
DI 1 = General1 (OCCN)
DI 2 = Gnd Flt Tester 1 (OCCN)
Rly 1 = Ground Fault Test (OCCN)
Rly 2 = AC Control (OCCN)

SEAR:  Inputs
SP 2.1 = Not Used (OCCN)
SP 3.1 = Not Used (OCCN)
SP 4.1 = POK 1 (OCCN)
SP 5.1 = POK 2 (OCCN)
SP 6.1 = Not Used (OCCN)

SEAR:  slot 1-4 Inputs
IN 2.1 = Not Used (OCCN)
IN 2.2 = Not Used (OCCN)
IN 3.1 = Not Used (OCCN)
IN 4.1 = Not Used (OCCN)

SEAR:  Inputs slot 5
IN 5.2 = Not Used (OCCN)

SEAR:  Inputs slot 6
IN 6.1 = Not Used (OCCN)
IN 6.2 = Not Used (OCCN)

SEAR:  slot 7-8 Inputs
IN 7.2 = Not Used (OCCN)
IN 7.3 = TSS 1 (OCCN)
IN 8.3 = TSS 2 (OCCN)
IN 8.5 = General2 (OCCN)

SITE:  programming
Radio Subnode = 1   (Field)
Field Password = Off (OCCN)
Low Battery Enabled = Off (Field)

Configuration Package File
--------------------------
Filename: chi-081.00.pac
```

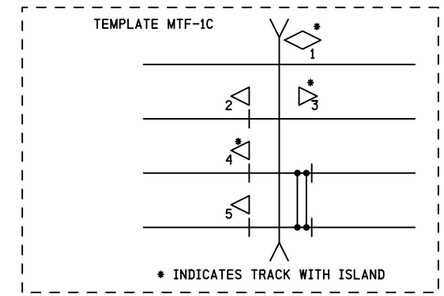

NOTES

1) DISTANCE(S) TO BE VERIFIED AT INSTALLATION
   INDICATE SELECTED PROGRAMMED VALUE IF DIFFERENT THAN SHOWN
   REFER TO 4000 GCP INSTRUCTION/INSTALLATION MANUAL
   FOR PROGRAMMING PARAMETERS

2) PROGRAM TEXT HIGHLIGHTED IN RED INDICATES 4000 PROGRAM
   MODIFICATIONS TO DEFAULT PROGRAM VALUES

3) EACH CONSTANT WARNING DEVICE SYSTEM TO BE PROGRAMMED TO
   CONVERT TO A MOTION SENSOR 300 FEET FROM EDGE OF ROAD
   TRAVELLED WAY
   SHUNT TRACK 300 FEET FROM EDGE OF ROAD TRAVELLED WAY
   AND NOTE "EZ" VALUE
   PROGRAM EACH SYSTEM WITH THE INDICATED "EZ" VALUE +2

4) VERIFY SET TIMER VALUE TO MATCH ACTUAL TRAIN MOVEMENT
   WITHIN THE CROSSING APPROACH CIRCUITS

SII 08 JAN 2015

PROPOSED
DESIGN NO. 14-0069
RED-IN YELLOW-OUT

AS INSTALLED
DATE _____
BY _____
(PRINT NAME)

PROPOSED D	M	Y	REVISIONS	D	C	COMPLETED D	M	Y	C
08	01	15	TRK CIRCUITS ADDED	NDH	MRB				

REGION SOUTHERN
SUB. CHICAGO 340

SIGNALS AND COMMUNICATIONS HOMEWOOD
08 JANUARY 2015
DES. NDH
CH. MRB

GCP 4000
PROGRAM INFORMATION
GILMAN, IL
2ND STREET

CHI-081.00-04

DOT#288 987G

REVISIONS				
NO.	DATE	BY	DESCRIPTION	APP. BY
1				
2				
3				
4				
5				

SIEMENS INDUSTRY INC

DES.: NDH	DATE: 19/06/14	JOB NO.: UXXD03603	
CKD.: MRB	ISSUE DATE: N/A	EST. NO.: XP-7262	
DRN.: NDH	PLAN NO.: N/A	SHEET 4 OF 22	
P. TIME: 15:44	P. DATE: 15-APR-2015	CAD ID.: CHI-081.00-04	

SIEMENS INDUSTRY INC
LOUISVILLE DIVISION, LOUISVILLE, KY

chi-081.00-04.dgn
15-APR-2015