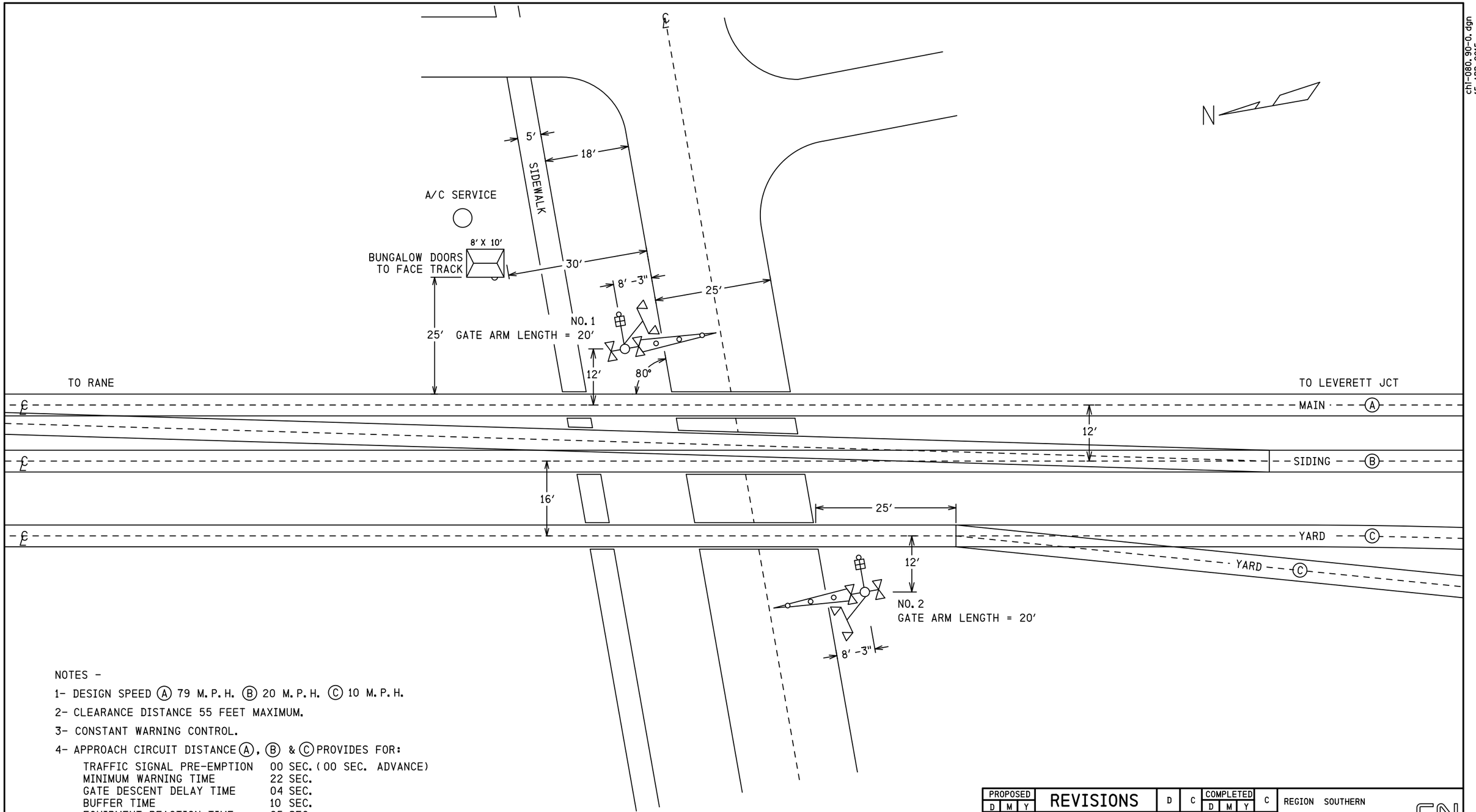

NOTES -

1- DESIGN SPEED (A) 79 M.P.H. (B) 20 M.P.H. (C) 10 M.P.H.

2- CLEARANCE DISTANCE 55 FEET MAXIMUM.

3- CONSTANT WARNING CONTROL.

4- APPROACH CIRCUIT DISTANCE (A), (B) & (C) PROVIDES FOR:

TRAFFIC SIGNAL PRE-EMPTION	00 SEC. (00 SEC. ADVANCE)
MINIMUM WARNING TIME	22 SEC.
GATE DESCENT DELAY TIME	04 SEC.
BUFFER TIME	10 SEC.
EQUIPMENT REACTION TIME	05 SEC.

PROPOSED D	PROPOSED M	PROPOSED Y	REVISIONS	D	C	COMPLETED D	COMPLETED M	COMPLETED Y	C
			PLAN REDRAWN			03	07	14	KLT

REGION SOUTHERN

SUB. CHICAGO 340

CN

SIGNALS AND COMMUNICATIONS HOMEWOOD

DES.

CH.

SITUATION SKETCH
SCALE 1" = 20′
GILMAN, IL

3RD STREET

CHI-080.90-0

DOT#288 986A

37

SIEMENS INDUSTRY INC
LOUISVILLE DIVISION, LOUISVILLE, KY

chi-080.90-0.dgn
15-APR-2015

REVISIONS			
NO.	DATE	BY	DESCRIPTION	APP. BY
1				
2				
3				
4				
5				

FLASHING LIGHT UNITS ALIGNMENT TABLE

PRIMARY FRONT LIGHTS FOR VEHICLES							
SIG #	LIGHT #	ROUNDEL		ROAD SPEED	MINIMUM DISTANCE	RECOMMENDED DISTANCE	ALIGNMENT DISTANCE
		SIZE	TYPE	MPH	FT	FT	FT
1	1,2	12"	LED	30	270	450	
2	7,8	12"	LED	30	270	450	
BACK LIGHTS FOR VEHICLES							
SIG #	LIGHT #	ROUNDEL		ROAD SPEED	MINIMUM DISTANCE	RECOMMENDED DISTANCE	ALIGNMENT DISTANCE
		SIZE	TYPE	MPH	FT	FT	FT
1	3,4	12"	LED	N/A	N/A	N/A	50
2	5,6	12"	LED	N/A	N/A	N/A	50
INTERMEDIATE FRONT LIGHTS FOR VEHICLES							
SIG #	LIGHT #	ROUNDEL		ROAD SPEED	MINIMUM DISTANCE	RECOMMENDED DISTANCE	ALIGNMENT DISTANCE
		SIZE	TYPE	MPH	FT	FT	FT
1	15,16	12"	LED	N/A	N/A	N/A	50
2	17,18	12"	LED	N/A	N/A	N/A	50

NOTE
FIELD IS TO PROVIDE THE ACTUAL ALIGNMENT DISTANCE AS DETERMINED BY
SCP-706: ROAD CROSSING DEVICE LIGHT UNIT ALIGNMENT PROCEDURES

SERVICE

C1A	TO SCD 3	3C*6 TECK90	3C*6 TECK90	C1 TO BUNGALOW
C1B	TO SCD 5A	3C*6 TECK90	3C*6 TECK90	C1C TO SCD 5B
C1D	TO SCD 13	3C*6 TECK90		

BUNGALOW

C2	TO 1R	2SC*6TW	2SC*6TW	C3 TO 1T
C6	TO 3T	2SC*6TW	2SC*6TW	C4 TO 2T
C19	TO 1ATB	2SC*6TW	2SC*6TW	C5 TO 2R
C21	TO 3ATB	2SC*6TW	2SC*6TW	C7 TO 3R
C22	TO SIG NO. 1	16C(7*6, 9*14)	2SC*6TW	C8 TO 4T
C24	SWITCH 3	16C(7*6, 9*14)	2SC*6TW	C9 TO 4R
C25	SWITCH 5A	16C(7*6, 9*14)	2SC*6TW	C10 TO 5T
C26	SWITCH 13	16C(7*6, 9*14)	2SC*6TW	C11 TO 5R
C27	SCD 3	8C(2*10, 6*14)	2SC*6TW	C12 TO 5C
C28	SCD 5A	8C(2*10, 6*14)	2SC*6TW	C13 TO 1TR
C29	SCD 13	8C(2*10, 6*14)	2SC*6TW	C14 TO 3TB
C30	TO M.080.65	8C(2*10, 6*14)	2SC*6TW	C15 TO 7TB
C31	TO M.080.65	8C(2*10, 6*14)	2SC*6TW	C16 TO 15TB
TO REMOTE 3	M.080.65	FIBER	2SC*6TW	C17 TO XTB
			2SC*6TW	C18 TO XTR
			2SC*6TW	C20 TO 1ATR
			16C(7*6, 9*14)	C23 TO SIG NO. 2
			7C*6	C32 6N SIG
			7C*6	C33 14NA SIG
			7C*6	C34 14NB SIG
			7C*6	C35 12NA SIG
			7C*6	C36 12NB SIG
			16C(7*6, 9*14)	C37 SWITCH 5B
			8C(2*10, 6*14)	C38 SCD 5B
			8C(2*10, 6*14)	C39 TO M.081.00
			8C(2*10, 6*14)	C40 TO M.081.00
			FIBER	TO MAIN HOUSE M.081.12

CONTENT	SHEET NO.
SITUATION SKETCH	0
TRACK LAYOUT & INDEX	01
GCP 4000 CHASSIS & MODULE LAYOUT	02
GCP 4000 PROGRAM INFORMATION	03
GCP 4000 PROGRAM INFORMATION	04
GCP 4000/SEAR III SETUP & PROGRAM	05
GCP 4000 CALIBRATION HISTORY	06
GCP 4000 TRACK 1, 2 & 3 MODULE CONNECTIONS	07
GCP 4000 TRACK 4, 5 & 6 MODULE CONNECTIONS	08
GCP 4000 CPUII+ & VHF COMMUNICATOR	09
GCP 4000/SEARIII WITH GFT & CRTU	10
GCP 4000/SSCCIIII GATE CONTROLLERS W/ ILODS	11
GATE 1 & 2 MECH. CONTROL CIRCUITS SAFETRAN S-60	12
TRACK CIRCUITS	13
6N/12N/14N SIGNAL CONTROL CIRCUITS	14
SWITCH 3 CONTROL & INDICATION CIRCUITS	15
SWITCH 5A CONTROL & INDICATION CIRCUITS	16
SWITCH 5B CONTROL & INDICATION CIRCUITS	17
SWITCH 13 CONTROL & INDICATION CIRCUITS	18
MISC. & SCD CIRCUITS	19
IXS VLC HARDWIRE CONFIG.	20
IXS VLC PERSONALITY MODULE CONNECTIONS	21
IXS VLC CHASSIS ID CONFIG. SETTINGS	22
IXS VLC COMMUNICATION CIRCUITS	23
3 SCD CONTROL & INDICATION CIRCUITS	24
5A SCD CONTROL & INDICATION CIRCUITS	25
5B SCD CONTROL & INDICATION CIRCUITS	26
13 SCD CONTROL & INDICATION CIRCUITS	27
DC DISTRIBUTION	28
AC DISTRIBUTION	29
BUNGALOW LAYOUT TOP VIEW & WAGO DETAIL	30
ENTRANCE BOARD L.I.G.P. INSIDE	31
ENTRANCE BOARD L.I.G.P. INSIDE	32
ENTRANCE BOARD L.I.G.P. OUTSIDE	33
ENTRANCE BOARD L.I.G.P. OUTSIDE	34
BUNGALOW LAYOUT SIDES A & B	35
BUNGALOW LAYOUT SIDES C & D	36

chi-080.90-01.dgn
15-APR-2015

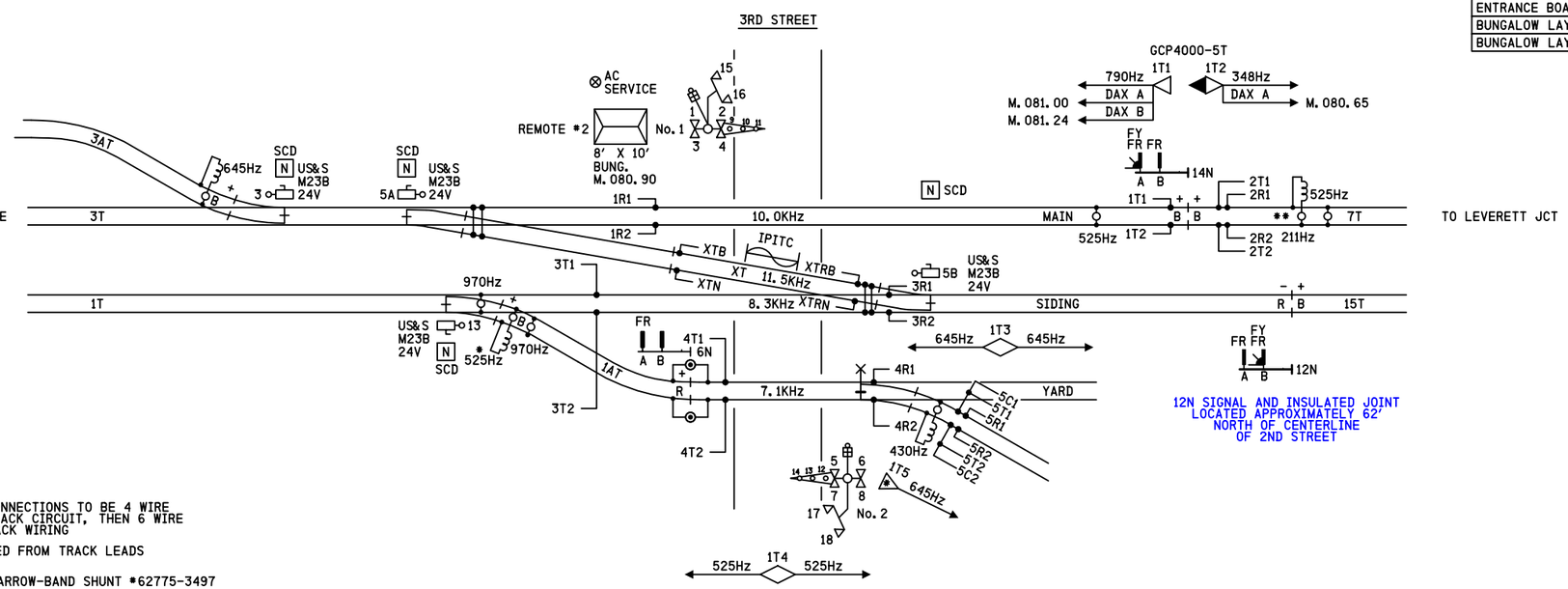

NOTES

1) HIGHWAY CROSSING TRACK CONNECTIONS TO BE 4 WIRE UNLESS NOTED WITH * IN TRACK CIRCUIT, THEN 6 WIRE SEE LOCATION PLAN FOR TRACK WIRING
2) APPROACH DISTANCE MEASURED FROM TRACK LEADS

DENOTES MULTIFREQUENCY NARROW-BAND SHUNT *62775-3497

DENOTES WIDEBAND SHUNT *8A076A

DENOTES MULTIFREQUENCY NARROW-BAND SHUNT *62775-3497 WITH SIMULATED TRACK INDUCTOR 8V617-0200

DENOTES MULTIFREQUENCY NARROW-BAND SHUNT *62775-3497 WITH SIMULATED TRACK INDUCTOR 8V617-0400

DENOTES MULTIFREQUENCY NARROW-BAND SHUNT *62775-1543 WITH SIMULATED TRACK INDUCTOR 8V617-1600

SII 03 JUL 2014

PROPOSED
DESIGN NO. 14-0070
RED-IN YELLOW-OUT

AS INSTALLED
DATE _____
BY _____
(PRINT NAME)

PROPOSED D	M	Y	REVISIONS	D	C	COMPLETED D	M	Y	C

REGION SOUTHERN
SUB. CHICAGO 340

SIGNALS AND COMMUNICATIONS HOMEWOOD
03 JULY 2014
DES. NDH
CH. MRB

TRACK LAYOUT & INDEX

GILMAN, IL
3RD STREET

CHI-080.90-01

DOT#288 986A

SIEMENS INDUSTRY INC			
DES.: NDH	DATE: 03/07/14	JOB NO.: WCNA10383	
CKD.: MRB	ISSUE DATE: N/A	EST. NO.: XP-7261	
DRN.: NDH	PLAN NO.: N/A	SHEET 1 OF 36	
P. TIME: 15:49	P. DATE: 15-APR-2015	CAD ID.: CHI-080.90-01	

SIEMENS INDUSTRY INC
LOUISVILLE DIVISION, LOUISVILLE, KY

REVISIONS				
NO.	DATE	BY	DESCRIPTION	APP. BY
1				
2				
3				
4				
5				

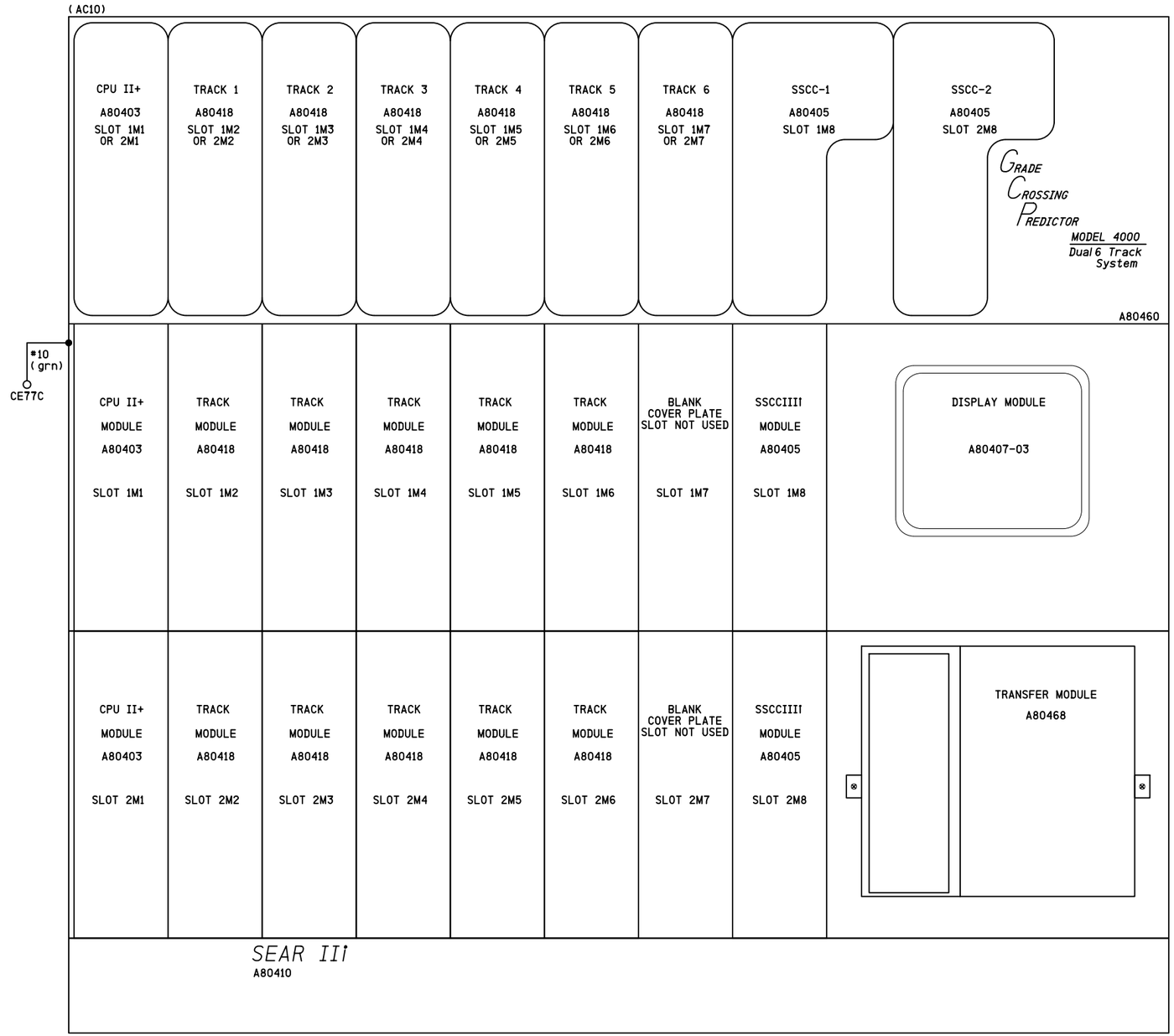

NOTES

1) DISABLE THE DISPLAY HEATER BY REMOVING JUMPER J-22 (LOCATED AT THE EDGE OF THE DISPLAY MODULE CARD THAT PLUGS INTO THE CHASSIS)

2) SET THE TRANSFER INTERVAL TIME TO 3 MINUTES BY SETTING DIPSWITCH S3 (LOCATED IN THE UPPER LEFT CORNER OF THE TRANSFER MODULE CARD) TO:

S3-0	S3-1	S3-2	S3-3	S3-4
1	1	0	0	0

WHERE 0 = UP/OPEN
1 = DOWN/CLOSED

ATTENTION!

ENSURE THE DISPLAY MODULE HEATER IS DISABLED
LEAVING THE DISPLAY HEATER ENABLED WILL REDUCE THE AMOUNT OF BATTERY STANDBY TIME IN THE EVENT OF AN AC POWER FAILURE

HEATER FUNCTION IS JUMPER SELECTABLE ON THE DISPLAY MODULE BOARD
THREE OPTIONS ARE AVAILABLE
NORMAL LCD HTR (DEFAULT)
HI CURRENT
NO JUMPER (HEATER DISABLED)

SII 03 JUL 2014

PROPOSED
DESIGN NO. 14-0070
RED-IN YELLOW-OUT

AS INSTALLED
DATE _____
BY _____
(PRINT NAME)

PROPOSED D	M	Y	REVISIONS	D	C	COMPLETED D	M	Y	C

REGION SOUTHERN
SUB. CHICAGO 340
CN

SIGNALS AND COMMUNICATIONS HOMEWOOD
03 JULY 2014
DES. NDH
CH. MRB

GCP 4000
CHASSIS & MODULE LAYOUT
GILMAN, IL
3RD STREET

CHI-080.90-02

DOT#288 986A

chi-080.90-02.dgn
15-APR-2015

SIEMENS INDUSTRY INC			
DES.: NDH	DATE: 03/07/14	JOB NO.: WCNA10383	
CKD.: MRB	ISSUE DATE: N/A	EST. NO.: XP-7261	
DRN.: NDH	PLAN NO.: N/A	SHEET 2 OF 36	
P TIME: 15:49	P DATE: 15-APR-2015	CAD ID.: CHI-080.90-02	

SIEMENS INDUSTRY INC
LOUISVILLE DIVISION, LOUISVILLE, KY

REVISIONS				
NO.	DATE	BY	DESCRIPTION	APP. BY
1				
2				
3				
4				
5				

```
Program Report
--------------

Location and SIN
----------------
DOT Number: 288986A
Milepost Number: 080.90
Site Name: 3RD STREET

SIN: 762010010016

MCF and Template Selection
--------------------------
MCF Name: GCP-T6X-02-2.mcf
MCF Revision: 022
MCFCRC: 79225F13

Template = 1C:2 BI, 2 Uni pairs (OCCN)

Check Numbers
-------------
Office Check Number: 1238970F
Config. Check Number: 17F6C42D
(Based on MCF Revision 022)


Program
-------
BASIC:  module configuration
Track 1/PSO 1 Slot = Track (OCCN)
Track 2/RIO 1 Slot = Track (OCCN)
Track 3/PSO 2 Slot = Track (OCCN)
Track 4/PSO 3 Slot = Track (OCCN)
Track 5/RIO 2 Slot = Track (OCCN)
Track 6/RIO 3 Slot = Not Used (OCCN)
SSCC-1 Slot = SSCC31(OCCN)
SSCC-2 Slot = SSCC31(OCCN)
SEAR Used = Yes (OCCN)

BASIC:  MS/GCP operation
Track 1 : MS/GCP Operation = Yes (OCCN)
Track 2 : MS/GCP Operation = Yes (OCCN)
Track 3 : MS/GCP Operation = Yes (OCCN)
Track 4 : MS/GCP Operation = Yes (OCCN)
Track 5 : MS/GCP Operation = Yes (OCCN)

BASIC:  Island operation
Track 1 : Island Used = Internal(OCCN)
Track 2 : Island Used = No (OCCN)
Track 3 : Island Used = Internal(OCCN)
Track 4 : Island Used = Internal(OCCN)
Track 5 : Island Used = No (OCCN)

BASIC:  preemption
Preempt Logic = No (OCCN)

BASIC:  radio Dax links
Radio DAX link A Used = No (OCCN)
Radio DAX link B Used = No (OCCN)

BASIC:  Vital Comms links
Vital Comms link 1 Used = No (OCCN)
Vital Comms link 2 Used = No (OCCN)

PREDICTORS:  track 1
Track 1 : Prime Used = Yes (OCCN)
Track 1 : Dax A Used = Yes (OCCN)
Track 1 : Dax B Used = Yes (OCCN)
Track 1 : Dax C Used = No (OCCN)
Track 1 : Dax D Used = No (OCCN)
Track 1 : Dax E Used = No (OCCN)
Track 1 : Dax F Used = No (OCCN)
Track 1 : Dax G Used = No (OCCN)

PREDICTORS:  track 2
Track 2 : Prime Used = Yes (OCCN)
Track 2 : Dax A Used = Yes (OCCN)
Track 2 : Dax B Used = No (OCCN)
Track 2 : Dax C Used = No (OCCN)
Track 2 : Dax D Used = No (OCCN)
Track 2 : Dax E Used = No (OCCN)
Track 2 : Dax F Used = No (OCCN)
Track 2 : Dax G Used = No (OCCN)

PREDICTORS:  track 3
Track 3 : Prime Used = Yes (OCCN)
Track 3 : Dax A Used = No (OCCN)
Track 3 : Dax B Used = No (OCCN)
Track 3 : Dax C Used = No (OCCN)
Track 3 : Dax D Used = No (OCCN)
Track 3 : Dax E Used = No (OCCN)
Track 3 : Dax F Used = No (OCCN)
Track 3 : Dax G Used = No (OCCN)

PREDICTORS:  track 4
Track 4 : Prime Used = Yes (OCCN)
Track 4 : Dax A Used = No (OCCN)
Track 4 : Dax B Used = No (OCCN)
Track 4 : Dax C Used = No (OCCN)
Track 4 : Dax D Used = No (OCCN)
Track 4 : Dax E Used = No (OCCN)
Track 4 : Dax F Used = No (OCCN)
Track 4 : Dax G Used = No (OCCN)

PREDICTORS:  track 5
Track 5 : Prime Used = Yes (OCCN)
Track 5 : Dax A Used = No (OCCN)
Track 5 : Dax B Used = No (OCCN)
Track 5 : Dax C Used = No (OCCN)
Track 5 : Dax D Used = No (OCCN)
Track 5 : Dax E Used = No (OCCN)
Track 5 : Dax F Used = No (OCCN)
Track 5 : Dax G Used = No (OCCN)

GCP:  track 1
Track 1 : GCP Freq Category = Standard (Field)
Track 1 : GCP Frequency = 790 Hz (Field,TCN)
Track 1 : Approach Distance = 1217 ft (Field,TCN)
Track 1 : Uni/Bi/Sim-Bidirni= Unidirni(OCCN,TCN)
Track 1 : GCP Transmit Level= High (Field,TCN)
Track 1 : Island Connection = Isi1(OCCN)
Track 1 : Directionally Wired = No (OCCN)
Track 1 : Island Distance = 150 ft (Field,TCN)
Track 1 : Computed Distance = 9999 ft (Field,TCN)
Track 1 : Linearization Steps = 100   (Field,TCN)

GCP:  track 1 enhanced det
Track 1 : Inbound PS Sensitivity = High (Field)
Track 1 : Speed Limiting Used = Yes (Field)
Track 1 : Outbound False Act Lvl= Normal(Field)
Track 1 : Outbound PS Timer = 20 sec (Field)
Track 1 : Trailing Switch Logic = On (Field)
Track 1 : Post Joint Detn Time = 15 sec (OCCN)
Track 1 : Adv Appr Predn = No (OCCN)
Track 1 : CancelPickup Delay = This Isi(OCCN)

GCP:  track 1 BIDAX RX
Track 1 : BIDAX To RX Appr = Not Used (OCCN)

GCP:  track 1 BIDAX TX
Track 1 : BIDAX To TX Appr = Not Used (OCCN)

GCP:  track 1 prime
Track 1 : Prime Warning Time = 32 sec (OCCN)
Track 1 : Prime Offset Distance = 0 ft (Field)
Track 1 : Switch MS EZ Level= 23   (OCCN)
Track 1 : Prime MS/GCP Mode = Pred (OCCN)
Track 1 : Prime Pickup Delay = 30 sec (OCCN)
Track 1 : Prime UAX = IP (OCCN)
Track 1 : Prime UAX Pickup = 22 sec (OCCN)

GCP:  track 1 Dax A
Track 1 : Dax A Warning Time = 42 sec (OCCN)
Track 1 : Dax A Offset Distance = 549 ft (Field)
Track 1 : Switch MS EZ Level= 0   (OCCN)
Track 1 : Pickup Delay Mode = Auto (OCCN)
Track 1 : Dax A MS/GCP Mode = Pred (OCCN)
Track 1 : Dax A Pickup Delay = 8 sec (OCCN)
Track 1 : Dax A Enable = IP (OCCN)
Track 1 : Dax A Enable Pickup = 2 sec (OCCN)

GCP:  track 1 Dax B
Track 1 : Dax B Warning Time = 33 sec (OCCN)
Track 1 : Dax B Offset Distance = 1727 ft (Field)
Track 1 : Switch MS EZ Level= 0   (OCCN)
Track 1 : Pickup Delay Mode = Auto (OCCN)
Track 1 : Dax B MS/GCP Mode = Pred (OCCN)
Track 1 : Dax B Pickup Delay = 8 sec (OCCN)
Track 1 : Dax B Enable = IP (OCCN)
Track 1 : Dax B Enable Pickup = 2 sec (OCCN)

GCP:  track 1 pos start
Track 1 : Positive Start = Off (OCCN)
Track 1 : Sudden Shnt Det Used = No (OCCN)
Track 1 : Low EZ Detection Used = No (OCCN)

GCP:  track 1 MS Control
Track 1 : MS/GCP CtrlIP Used = No (OCCN)
Track 1 : MS Sensitivity Level= 0   (Field)
Track 1 : Compensation Level= 1300   (Field,TCN)
Track 1 : Warn Time-Ballast Comp = High (Field,TCN)
Track 1 : Low EX Adjustment = 39   (Field)
Track 1 : Bidirn Dax Passthru = No (OCCN)
Track 1 : False Act on Train Stop = No (Field)
Track 1 : EX Limiting Used = Yes (Field)
Track 1 : EZ Correction Used = Yes (Field)

GCP:  track 2
Track 2 : GCP Freq Category = Standard (Field)
Track 2 : GCP Frequency = 348 Hz (Field,TCN)
Track 2 : Approach Distance = 2503 ft (Field,TCN)
Track 2 : Uni/Bi/Sim-Bidirni= Sim.  Bidirni(OCCN,TCN)
Track 2 : GCP Transmit Level= High (Field,TCN)
Track 2 : Island Connection = Isi1(OCCN)
Track 2 : Directionally Wired = No (OCCN)
Track 2 : Island Distance = 0 ft (Field,TCN)
Track 2 : Computed Distance = 9999 ft (Field,TCN)
Track 2 : Linearization Steps = 100   (Field,TCN)

GCP:  track 2 enhanced det
Track 2 : Inbound PS Sensitivity = High (Field)
Track 2 : Speed Limiting Used = Yes (Field)
Track 2 : Outbound False Act Lvl= Normal(Field)
Track 2 : Outbound PS Timer = 20 sec (Field)
Track 2 : Trailing Switch Logic = On (Field)
Track 2 : Post Joint Detn Time = 15 sec (OCCN)
Track 2 : Adv Appr Predn = No (OCCN)
Track 2 : CancelPickup Delay = This Isi(OCCN)

GCP:  track 2 BIDAX RX
Track 2 : BIDAX To RX Appr = Not Used (OCCN)

GCP:  track 2 BIDAX TX
Track 2 : BIDAX To TX Appr = Not Used (OCCN)

GCP:  track 2 prime
Track 2 : Prime Warning Time = 32 sec (OCCN)
Track 2 : Prime Offset Distance = 0 ft (Field)
Track 2 : Switch MS EZ Level= 12   (OCCN)
Track 2 : Prime MS/GCP Mode = Pred (OCCN)
Track 2 : Prime Pickup Delay = 30 sec (OCCN)
Track 2 : Prime UAX = IP (OCCN)
Track 2 : Prime UAX Pickup = 22 sec (OCCN)

GCP:  track 2 Dax A
Track 2 : Dax A Warning Time = 34 sec (OCCN)
Track 2 : Dax A Offset Distance = 1367 ft (Field)
Track 2 : Switch MS EZ Level= 0   (OCCN)
Track 2 : Pickup Delay Mode = Auto (OCCN)
Track 2 : Dax A MS/GCP Mode = Pred (OCCN)
Track 2 : Dax A Pickup Delay = 8 sec (OCCN)
Track 2 : Dax A Enable = IP (OCCN)
Track 2 : Dax A Enable Pickup = 2 sec (OCCN)

GCP:  track 2 pos start
Track 2 : Positive Start = Off (OCCN)
Track 2 : Sudden Shnt Det Used = No (OCCN)
Track 2 : Low EZ Detection Used = No (OCCN)

GCP:  track 2 MS Control
Track 2 : MS/GCP CtrlIP Used = No (OCCN)
Track 2 : MS Sensitivity Level= 0   (Field)
Track 2 : Compensation Level= 1300   (Field,TCN)
Track 2 : Warn Time-Ballast Comp = High (Field,TCN)
Track 2 : Low EX Adjustment = 39   (Field)
Track 2 : Bidirn Dax Passthru = No (OCCN)
Track 2 : False Act on Train Stop = No (Field)
Track 2 : EX Limiting Used = Yes (Field)
Track 2 : EZ Correction Used = Yes (Field)

GCP:  track 3
Track 3 : GCP Freq Category = Standard (Field)
Track 3 : GCP Frequency = 645 Hz (Field,TCN)
Track 3 : Approach Distance = 1217 ft (Field,TCN)
Track 3 : Uni/Bi/Sim-Bidirni= Bidirni(OCCN,TCN)
Track 3 : GCP Transmit Level= High (Field,TCN)
Track 3 : Island Connection = Isi3(OCCN)
Track 3 : Directionally Wired = No (OCCN)
Track 3 : Island Distance = 126 ft (Field,TCN)
Track 3 : Computed Distance = 9999 ft (Field,TCN)
Track 3 : Linearization Steps = 100   (Field,TCN)

GCP:  track 3 enhanced det
Track 3 : Inbound PS Sensitivity = High (Field)
Track 3 : Speed Limiting Used = Yes (Field)
Track 3 : Outbound False Act Lvl= Normal(Field)
Track 3 : Outbound PS Timer = 20 sec (Field)
Track 3 : Trailing Switch Logic = On (Field)
Track 3 : Post Joint Detn Time = 15 sec (OCCN)
Track 3 : Adv Appr Predn = No (OCCN)
Track 3 : CancelPickup Delay = This Isi(OCCN)

GCP:  track 3 BIDAX RX
Track 3 : BIDAX To RX Appr = Not Used (OCCN)

GCP:  track 3 BIDAX TX
Track 3 : BIDAX To TX Appr = Not Used (OCCN)

GCP:  track 3 prime
Track 3 : Prime Warning Time = 32 sec (OCCN)
Track 3 : Prime Offset Distance = 0 ft (Field)
Track 3 : Switch MS EZ Level= 23   (OCCN)
Track 3 : Prime MS/GCP Mode = Pred (OCCN)
Track 3 : Prime Pickup Delay = 30 sec (OCCN)
Track 3 : Prime UAX = IP (OCCN)
Track 3 : Prime UAX Pickup = 22 sec (OCCN)

GCP:  track 3 pos start
Track 3 : Positive Start = Off (OCCN)
Track 3 : Sudden Shnt Det Used = No (OCCN)
Track 3 : Low EZ Detection Used = No (OCCN)

GCP:  track 3 MS Control
Track 3 : MS/GCP CtrlIP Used = No (OCCN)
Track 3 : MS Sensitivity Level= 0   (Field)
Track 3 : Compensation Level= 1300   (Field,TCN)
Track 3 : Warn Time-Ballast Comp = Low (Field,TCN)
Track 3 : Low EX Adjustment = 39   (Field)
Track 3 : Bidirn Dax Passthru = No (OCCN)
Track 3 : False Act on Train Stop = No (Field)
Track 3 : EX Limiting Used = Yes (Field)
Track 3 : EZ Correction Used = Yes (Field)

GCP:  track 4
Track 4 : GCP Freq Category = Standard (Field)
Track 4 : GCP Frequency = 525 Hz (Field,TCN)
Track 4 : Approach Distance = 421 ft (Field,TCN)
Track 4 : Uni/Bi/Sim-Bidirni= Bidirni(OCCN,TCN)
Track 4 : GCP Transmit Level= High (Field,TCN)
Track 4 : Island Connection = Isi4(OCCN)
Track 4 : Directionally Wired = No (OCCN)
Track 4 : Island Distance = 126 ft (Field,TCN)
Track 4 : Computed Distance = 9999 ft (Field,TCN)
Track 4 : Linearization Steps = 100   (Field,TCN)

GCP:  track 4 enhanced det
Track 4 : Inbound PS Sensitivity = High (Field)
Track 4 : Speed Limiting Used = Yes (Field)
Track 4 : Outbound False Act Lvl= Normal(Field)
Track 4 : Outbound PS Timer = 20 sec (Field)
Track 4 : Trailing Switch Logic = On (Field)
Track 4 : Post Joint Detn Time = 15 sec (OCCN)
Track 4 : Adv Appr Predn = No (OCCN)
Track 4 : CancelPickup Delay = This Isi(OCCN)

GCP:  track 4 BIDAX RX
Track 4 : BIDAX To RX Appr = Not Used (OCCN)

GCP:  track 4 BIDAX TX
Track 4 : BIDAX To TX Appr = Not Used (OCCN)

GCP:  track 4 prime
Track 4 : Prime Warning Time = 32 sec (OCCN)
Track 4 : Prime Offset Distance = 0 ft (Field)
Track 4 : Switch MS EZ Level= 61   (OCCN)
Track 4 : Prime MS/GCP Mode = Pred (OCCN)
Track 4 : Prime Pickup Delay = 30 sec (OCCN)
Track 4 : Prime UAX = Not Used (OCCN)

GCP:  track 4 pos start
Track 4 : Positive Start = Off (OCCN)
Track 4 : Sudden Shnt Det Used = No (OCCN)
Track 4 : Low EZ Detection Used = No (OCCN)

GCP:  track 4 MS Control
Track 4 : MS/GCP CtrlIP Used = No (OCCN)
Track 4 : MS Sensitivity Level= 0   (Field)
Track 4 : Compensation Level= 1300   (Field,TCN)
Track 4 : Warn Time-Ballast Comp = High (Field,TCN)
Track 4 : Low EX Adjustment = 39   (Field)
Track 4 : Bidirn Dax Passthru = No (OCCN)
Track 4 : False Act on Train Stop = No (Field)
Track 4 : EX Limiting Used = Yes (Field)
Track 4 : EZ Correction Used = Yes (Field)

GCP:  track 5
Track 5 : GCP Freq Category = Standard (Field)
Track 5 : GCP Frequency = 645 Hz (Field,TCN)
Track 5 : Approach Distance = 399 ft (Field,TCN)
Track 5 : Uni/Bi/Sim-Bidirni= Unidirni(OCCN,TCN)
Track 5 : GCP Transmit Level= High (Field,TCN)
Track 5 : Island Connection = No Islands (OCCN)
Track 5 : Directionally Wired = No (OCCN)
Track 5 : Island Distance = 0 ft (Field,TCN)
Track 5 : Computed Distance = 9999 ft (Field,TCN)
Track 5 : Linearization Steps = 100   (Field,TCN)

GCP:  track 5 enhanced det
Track 5 : Inbound PS Sensitivity = High (Field)
Track 5 : Speed Limiting Used = Yes (Field)
Track 5 : Outbound False Act Lvl= Normal(Field)
Track 5 : Outbound PS Timer = 20 sec (Field)
Track 5 : Trailing Switch Logic = On (Field)
Track 5 : Post Joint Detn Time = 15 sec (OCCN)
Track 5 : Adv Appr Predn = No (OCCN)
Track 5 : CancelPickup Delay = This Isi(OCCN)

GCP:  track 5 BIDAX RX
Track 5 : BIDAX To RX Appr = Not Used (OCCN)

GCP:  track 5 BIDAX TX
Track 5 : BIDAX To TX Appr = Not Used (OCCN)

GCP:  track 5 prime
Track 5 : Prime Warning Time = 32 sec (OCCN)
Track 5 : Prime Offset Distance = 87 ft (Field)
Track 5 : Switch MS EZ Level= 0   (OCCN)
Track 5 : Pickup Delay Mode = Fixed (OCCN)
Track 5 : Prime MS/GCP Mode = Pred (OCCN)
Track 5 : Prime Pickup Delay = 30 sec (OCCN)
Track 5 : Prime UAX = Not Used (OCCN)

GCP:  track 5 pos start
Track 5 : Positive Start = Off (OCCN)
Track 5 : Sudden Shnt Det Used = No (OCCN)
Track 5 : Low EZ Detection Used = No (OCCN)

GCP:  track 5 MS Control
Track 5 : MS/GCP CtrlIP Used = No (OCCN)
Track 5 : MS Sensitivity Level= 0   (Field)
Track 5 : Compensation Level= 1300   (Field,TCN)
Track 5 : Warn Time-Ballast Comp = Low (Field,TCN)
Track 5 : Low EX Adjustment = 39   (Field)
Track 5 : Bidirn Dax Passthru = No (OCCN)
Track 5 : False Act on Train Stop = No (Field)
Track 5 : EX Limiting Used = Yes (Field)
Track 5 : EZ Correction Used = Yes (Field)

ISLAND:  track 1
Track 1 : IslFrequency = 10.0 kHz (Field)
Track 1 : Pickup Delay (2s +) = 0 sec (OCCN)
Track 1 : IslEnable IP Used = No (OCCN)

ISLAND:  track 3
Track 3 : IslFrequency = 8.3 kHz (Field)
Track 3 : Pickup Delay (2s +) = 0 sec (OCCN)
Track 3 : IslEnable IP Used = No (OCCN)

ISLAND:  track 4
Track 4 : IslFrequency = 7.1 kHz (Field)
Track 4 : Pickup Delay (2s +) = 0 sec (OCCN)
Track 4 : IslEnable IP Used = No (OCCN)

AND:  track Anding
AND 1 XR Used = Yes (OCCN)
AND 2 Used = Yes (OCCN)
AND 3 Used = No (OCCN)
AND 4 Used = No (OCCN)
AND 5 Used = No (OCCN)
AND 6 Used = No (OCCN)
AND 7 Used = No (OCCN)
AND 8 Used = No (OCCN)

AND:  AND 1 XR
AND 1 XR Track 1 = Prime (OCCN)
AND 1 XR Track 2 = Prime (OCCN)
AND 1 XR Track 3 = Prime (OCCN)
AND 1 XR Track 4 = Prime (OCCN)
AND 1 XR Track 5 = Prime (OCCN)
AND 1 Enable Used = Yes (OCCN)
And 1 Enable Pickup = 0 sec (OCCN)
AND 1 Enable Drop = 0 sec (OCCN)
AND 1 Wrap Used = No (OCCN)

AND:  AND 2
AND 2 Track 1 = Not Used (OCCN)
AND 2 Track 2 = Not Used (OCCN)
AND 2 Track 3 = Not Used (OCCN)
AND 2 Track 4 = Not Used (OCCN)
AND 2 Track 5 = Not Used (OCCN)
AND 2 Enable Used = Yes (OCCN)
AND 2 Enable Pickup = 0 sec (OCCN)
AND 2 Enable Drop = 0 sec (OCCN)
AND 2 Wrap Used = No (OCCN)
```

CONT'D ON
SHEET 04

TEMPLATE MTF-1C

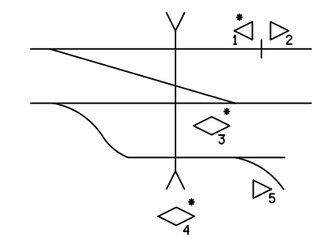

* INDICATES TRACK WITH ISLAND

NOTES

1) DISTANCE(S) TO BE VERIFIED AT INSTALLATION
   INDICATE SELECTED PROGRAMMED VALUE IF DIFFERENT THAN SHOWN
   REFER TO 4000 GCP INSTRUCTION/INSTALLATION MANUAL
   FOR PROGRAMMING PARAMETERS

2) PROGRAM TEXT HIGHLIGHTED IN RED INDICATES 4000 PROGRAM
   MODIFICATIONS TO DEFAULT PROGRAM VALUES

3) EACH CONSTANT WARNING DEVICE SYSTEM (T1,T2,T3 & T4) TO BE
   PROGRAMMED TO CONVERT TO A MOTION SENSOR 300 FEET FROM
   EDGE OF ROAD TRAVELLED WAY
   SHUNT TRACK 300 FEET FROM EDGE OF ROAD TRAVELLED WAY
   AND NOTE "EZ" VALUE
   PROGRAM EACH SYSTEM WITH THE INDICATED "EZ" VALUE +2

4) VERIFY SET TIMER VALUE TO MATCH ACTUAL TRAIN MOVEMENT
   WITHIN THE CROSSING APPROACH CIRCUITS

SII 03 JUL 2014

PROPOSED
DESIGN NO. 14-0070
RED-IN YELLOW-OUT

AS INSTALLED
DATE _____
BY _____
(PRINT NAME)

PROPOSED D	M	Y	REVISIONS	D	C	COMPLETED D	M	Y	C

REGION SOUTHERN
SUB. CHICAGO 340

SIGNALS AND COMMUNICATIONS HOMEWOOD
03 JULY 2014
DES. NDH
CH. MRB

GCP 4000
PROGRAM INFORMATION
GILMAN, IL
3RD STREET

CHI-080.90-03

DOT#288 986A

SIEMENS INDUSTRY INC			
DES.: NDH	DATE: 03/07/14	JOB NO.: WCNA10383	
CKD.: MRB	ISSUE DATE: N/A	EST. NO.: XP-7261	
DRN.: NDH	PLAN NO.: N/A	SHEET 3 OF 36	
P TIME: 15:49	P DATE: 15-APR-2015	CAD ID.: CHI-080.90-03	

SIEMENS INDUSTRY INC
LOUISVILLE DIVISION, LOUISVILLE, KY

chi-080.90-03.dgn
15-APR-2015

REVISIONS				
NO.	DATE	BY	DESCRIPTION	APP. BY
1				
2				
3				
4				
5				

CONT'D ON
SHEET 03

```
ADVANCED:  MS restart
MS/GCP Restart Used = No (OCCN)

ADVANCED:  out of service
OOS Control = OOS IPs (OCCN)

ADVANCED:  out of service 2
T1 OOS Control = OOS Input 1 (OCCN)
T2 OOS Control = OOS Input 1 (OCCN)
T3 OOS Control = OOS Input 2 (OCCN)
T4 OOS Control = OOS Input 3 (OCCN)
T5 OOS Control = OOS Input 3 (OCCN)
T1 OOS Controls = GCP and Island (OCCN)
T2 OOS Controls = GCP Only (OCCN)
T3 OOS Controls = GCP and Island (OCCN)
T4 OOS Controls = GCP and Island (OCCN)
T5 OOS Controls = GCP Only (OCCN)

ADVANCED:  track wrap circuits
Wrap LOS Timer = 5 sec (OCCN)
Track 1 Wrap Used = No (OCCN)
Track 2 Wrap Used = No (OCCN)
Track 3 Wrap Used = No (OCCN)
Track 4 Wrap Used = No (OCCN)
Track 5 Wrap Used = No (OCCN)

ADVANCED:  trk 1 overrides
Track 1 : All Predictors Override Used = No (OCCN)
Track 1 : Dax A Override Used = No (OCCN)
Track 1 : Dax B Override Used = No (OCCN)

ADVANCED:  trk 2 overrides
Track 2 : All Predictors Override Used = No (OCCN)
Track 2 : Dax A Override Used = No (OCCN)

ADVANCED:  trk 3 overrides
Track 3 : All Predictors Override Used = No (OCCN)

ADVANCED:  trk 4 overrides
Track 4 : All Predictors Override Used = No (OCCN)

ADVANCED:  trk 5 overrides
Track 5 : All Predictors Override Used = No (OCCN)

ADVANCED:  OR logic
OR 1 Used = No (OCCN)
OR 2 Used = No (OCCN)
OR 3 Used = No (OCCN)
OR 4 Used = No (OCCN)

ADVANCED:  Internal I/O 1
Pass Thrus = Yes (OCCN)
Int.1 Sets = AND 2 Enable (OCCN)
Int.1 Set by = Passthru State 1 (OCCN)
Int.2 Sets = AND 2 Enable (OCCN)
Int.2 Set by = Passthru State 2 (OCCN)
Int.3 Sets = GD 1.1 (OCCN)
Int.3 Set by = Passthru State 1 (OCCN)
Int.4 Sets = GD 2.1 (OCCN)
Int.4 Set by = Passthru State 2 (OCCN)

ADVANCED:  Internal I/O 2
Int.5 Sets = Not Used (OCCN)
Int.5 Set by = Not Used (OCCN)
Int.6 Sets = Not Used (OCCN)
Int.6 Set by = Not Used (OCCN)
Int.7 Sets = Not Used (OCCN)
Int.7 Set by = Not Used (OCCN)
Int.8 Sets = Not Used (OCCN)
Int.8 Set by = Not Used (OCCN)

ADVANCED:  Internal I/O 3
Int.9 Sets = Not Used (OCCN)
Int.9 Set by = Not Used (OCCN)
Int.10 Sets = Not Used (OCCN)
Int.10 Set by = Not Used (OCCN)
Int.11 Sets = Not Used (OCCN)
Int.11 Set by = Not Used (OCCN)
Int.12 Sets = Not Used (OCCN)
Int.12 Set by = Not Used (OCCN)

ADVANCED:  Internal I/O 4
Int.13 Sets = Not Used (OCCN)
Int.13 Set by = Not Used (OCCN)
Int.14 Sets = Not Used (OCCN)
Int.14 Set by = Not Used (OCCN)
Int.15 Sets = Not Used (OCCN)
Int.15 Set by = Not Used (OCCN)
Int.16 Sets = Not Used (OCCN)
Int.16 Set by = Not Used (OCCN)

ADVANCED:  site options
Daylight Savings = On (Field)
Units = Standard (OCCN)
Maint Call Rpt IP Used = No (OCCN)
Emergency Activate IP = No (OCCN)
EZ/EX Logging = Change (Field)
EZ/EX Point Change = 3   (Field)

SSCC
Gates Used = Yes (OCCN)
SSCC1+2 GPs Coupled = Yes (OCCN)
Min Activation = 22 sec (OCCN)
Rmt Activation Cancel = 3 min (OCCN)
Bell On Gate Rising = No (OCCN)
Mute Bell On Gate Down = Yes (OCCN)
SSCCIV Controller Used = No (OCCN)

SSCC:  1
SSCC-1 Activation = AND 1 XR (OCCN)
SSCC-1 Gate Delay = 4 sec (OCCN)
SSCC-1 Number of GPs = 1 (OCCN)
SSCC-1 Number of GDs = 1 (OCCN)
SSCC 1 : Flash Rate = 55 (OCCN)
SSCC 1 : Low Battery Detection = No (Field)
SSCC 1 : Flash Sync = master (OCCN)
SSCC 1 : Invert Gate Output = No (OCCN)
SSCC 1 : Lamp Neutral Test = Off (Field)
Aux-1 Xng Ctrl Used = No (OCCN)

SSCC:  2
SSCC-2 Activation = AND 1 XR (OCCN)
SSCC-2 Gate Delay = 4 sec (OCCN)
SSCC-2 Number of GPs = 0 (OCCN)
SSCC-2 Number of GDs = 1 (OCCN)
SSCC 2 : Flash Rate = 55 (OCCN)
SSCC 2 : Low Battery Detection = No (Field)
SSCC 2 : Flash Sync = slave (OCCN)
SSCC 2 : Invert Gate Output = No (OCCN)
SSCC 2 : Lamp Neutral Test = Off (Field)
Aux-2 Xng Ctrl Used = No (OCCN)

OUTPUT:  assignment page 1
OUT 1.1 = T1 Dax A (OCCN)
OUT 1.2 = T1 Dax B (OCCN)
OUT 2.1 = T2 Dax A (OCCN)
OUT 2.2 = Not Used (OCCN)
OUT 3.1 = Not Used (OCCN)
OUT 3.2 = Not Used (OCCN)

OUTPUT:  assignment page 2
OUT 4.1 = AND 1 XR (OCCN)
OUT 4.2 = AND 2 (OCCN)
OUT 5.1 = Not Used (OCCN)
OUT 5.2 = Not Used (OCCN)

INPUT:  assignment page 1
IN 1.1 = T1 Prime UAX (OCCN)
IN 1.2 = T1 Prime UAX (OCCN)
IN 2.1 = T2 Prime UAX (OCCN)
IN 2.2 = Not Used (OCCN)
IN 3.1 = T1 Dax B Enable (OCCN)
IN 3.2 = T2 Dax A Enable (OCCN)

INPUT:  assignment page 2
IN 4.1 = T2 Dax A Enable (OCCN)
IN 4.2 = T3 Prime UAX (OCCN)
IN 5.1 = T1 Dax A Enable (OCCN)
IN 5.2 = AND 1 XR Enable (OCCN)

IO:  assignment SSCC
OUT GC 1 = Gate Output 1 (OCCN)
OUT GC 2 = Gate Output 2 (OCCN)
IN 7.1 = AND 1 XR Enable (OCCN)
IN 7.2 = Out Of Service IP 1 (OCCN)
IN 7.3 = T3 Prime UAX (OCCN)
IN 7.4 = Passthru State 1 (OCCN)
IN 7.5 = GP 1.1 (OCCN)
IN 8.1 = Out Of Service IP 2 (OCCN)
IN 8.2 = Out Of Service IP 3 (OCCN)
IN 8.3 = Not Used (OCCN)
IN 8.4 = Passthru State 2 (OCCN)
IN 8.5 = Not Used (OCCN)

SEAR
SEAR Subnode = 99   (OCCN)
DI 1 = General1 (OCCN)
DI 2 = Gnd Flt Tester 1 (OCCN)
Rly 1 = Ground Fault Test (OCCN)
Rly 2 = AC Control (OCCN)

SEAR:  Inputs
SP 2.1 = POK 1 (OCCN)
SP 3.1 = TSS 1 (OCCN)
SP 4.1 = Not Used (OCCN)
SP 5.1 = Not Used (OCCN)
SP 6.1 = Not Used (OCCN)

SEAR:  slot 1-4 Inputs
IN 2.2 = POK 2 (OCCN)

SEAR:  Inputs slot 6
IN 6.1 = Not Used (OCCN)
IN 6.2 = Not Used (OCCN)

SEAR:  slot 7-8 Inputs
IN 8.3 = TSS 2 (OCCN)
IN 8.5 = General2 (OCCN)

SITE:  programming
Radio Subnode = 1   (Field)
Field Password = Off (OCCN)
Low Battery Enabled = Off (Field)

Configuration Package File
--------------------------
Filename: chi-080.90.pac
```

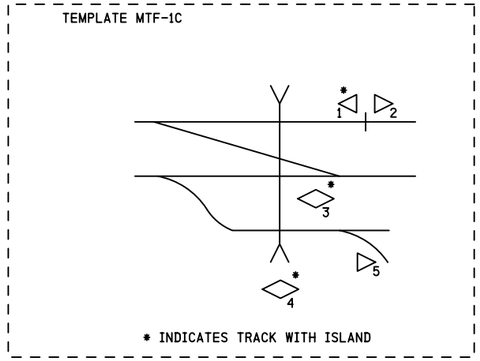

NOTES

1) DISTANCE(S) TO BE VERIFIED AT INSTALLATION
   INDICATE SELECTED PROGRAMMED VALUE IF DIFFERENT THAN SHOWN
   REFER TO 4000 GCP INSTRUCTION/INSTALLATION MANUAL
   FOR PROGRAMMING PARAMETERS

2) PROGRAM TEXT HIGHLIGHTED IN RED INDICATES 4000 PROGRAM
   MODIFICATIONS TO DEFAULT PROGRAM VALUES

3) EACH CONSTANT WARNING DEVICE SYSTEM (T1, T2, T3 & T4) TO BE
   PROGRAMMED TO CONVERT TO A MOTION SENSOR 300 FEET FROM
   EDGE OF ROAD TRAVELLED WAY
   SHUNT TRACK 300 FEET FROM EDGE OF ROAD TRAVELLED WAY
   AND NOTE "EZ" VALUE
   PROGRAM EACH SYSTEM WITH THE INDICATED "EZ" VALUE +2

4) VERIFY SET TIMER VALUE TO MATCH ACTUAL TRAIN MOVEMENT
   WITHIN THE CROSSING APPROACH CIRCUITS

chi-080.90-04.dgn
15-APR-2015

SII 03 JUL 2014

PROPOSED
DESIGN NO. 14-0070
RED-IN YELLOW-OUT

AS INSTALLED
DATE _____
BY _____
(PRINT NAME)

PROPOSED			REVISIONS	D	C	COMPLETED			C
D	M	Y				D	M	Y	

REGION SOUTHERN
SUB. CHICAGO 340

SIGNALS AND COMMUNICATIONS HOMEWOOD
03 JULY 2014
DES. NDH
CH. MRB

GCP 4000
PROGRAM INFORMATION
GILMAN, IL
3RD STREET

CHI-080.90-04

DOT#288 986A

SIEMENS INDUSTRY INC

DES.: NDH	DATE: 03/07/14	JOB NO.: WCNA10383	
CKD.: MRB	ISSUE DATE: N/A	EST. NO.: XP-7261	
DRN.: NDH	PLAN NO.: N/A	SHEET 4 OF 36	
P TIME: 15:49	P DATE: 15-APR-2015	CAD ID.: CHI-080.90-04	

SIEMENS INDUSTRY INC
LOUISVILLE DIVISION, LOUISVILLE, KY

REVISIONS				
NO.	DATE	BY	DESCRIPTION	APP. BY
1				
2				
3				
4				
5				

TO CONFIGURE SEARII & SEARIII PRESS SITE SETUP KEY. USE ARROW KEYS TO MAKE SELECTION, PRESS ENTER AFTER SELECTION HAS BEEN MADE.

STAGE 1

PROGRAM MENU QUESTIONS	PROGRAM	OPTIONS/RANGE
DATE/TIME?	CURRENT DATE/TIME	CURRENT DATE/TIME
AUTOMATIC DST ADJUSTMENT?	YES	YES, NO
TIME ZONE?	CENTRAL	EASTERN, CENTRAL, MOUNTAIN, PACIFIC, ALASKA, HAWAII, ATLANTIC, SASKATCHEWAN, NEW FOUNLAND
SITE NAME?	3RD STREET	STREET NAME
MILE POST?	080.90	MILEAGE
DOT/CROSSING IS #?	288 986A	123456A
TESTER TYPE?	CROSSING	CROSSING, WAYSIDE
DATE FORMAT?	dd-mm-yyyy	mm-dd-yyyy, dd-mm-yyyy
TEMPERATURE FORMAT?	FAHRENHEIT	FAHRENHEIT, CELSIUS
INDICATE HOLD?	0	SECONDS
SITE TYPE?		NO COM, BULLHORN, DIALUP, NODE, COLLECTOR
SITE ATCS ADDRESS?		7.RRR.LLL.GGG.99.01
OFFICE ATCS ADDRESS?		2.RRR.NN.DDDD
PRIMARY HOP ADDR? (FOR NODE USE)		7.RRR.LLL.GGG.00.01
BACKUP HOP ADDR1? (FOR NODE USE)		7.RRR.LLL.GGG.00.01
BACKUP HOP ADDR2? (FOR NODE USE)		7.RRR.LLL.GGG.00.01
POLL ID? (FOR COLLECTOR USE)		1-99
MODE? (FOR COLLECTOR USE)		GEN/ATCS, GENISYS
WAMS/XID? (FOR COLLECTOR USE)		ENABLED, DISABLE
OFFICE COMM. DEVICE? (FOR COLLECTOR USE)		DIRECT (RS232) MCM (RS232) MCM (ECHELON) SREAD SPEC (ECHELON) DIAL MODEM (RS232) S200 RADIO (RS422)
OFFICE PHONE NUMBER? (FOR COLLECTOR USE)		PHONE NUMBER OF WAMS
INIT STRING? (FOR COLLECTOR USE)		OPTIONAL HAYES MODEM INITIALIZATION STRING
FIELD COMM. DEVICE?		VHF COMM. (ECHELON) VHF COMM. (RS232) SPREAD SPEC (ECHELON) SPREAD SPEC (RS232)
USER PORT?	57600, 8, N, 1, N	BAUD, DATA BITS, PARITY, STOP BITS, FLOW CONTROL
AUX PORT?	9600, 8, N, 1, N	BAUD, DATA BITS, PARITY, STOP BITS, FLOW CONTROL

YOU WILL NOW SEE A MESSAGE "PLEASE WAIT COMPILING STAGE 1" CONTINUE TO NEXT PROGRAM MENU QUESTIONS.

NOTES:

1) ASSIGNED DTMF CODES:

ACTIVATE CROSSING (MAIN TRACK - 1T1)	98611#
DE-ACTIVATE CROSSING (MAIN TRACK - 1T1)	98610#
ACTIVATE CROSSING (SIDING Y TRACK - 1T3)	98631#
DE-ACTIVATE CROSSING (SIDING Y TRACK - 1T3)	98630#
ACTIVATE CROSSING (SIDING TRACK - 1T4)	98641#
DE-ACTIVATE CROSSING (SIDING TRACK - 1T4)	98640#
ACTIVATE CROSSING (MAINTENANCE)	98671#
DE-ACTIVATE CROSSING (MAINTENANCE)	98670#

2) ADDITIONAL OPTIONS: DUAL CROSSING, EXTERNAL ENTRANCE GATE CONTROLLERS.

STAGE 2

QUESTION	PROGRAM	SELECTION 1 (MINIMUM)	SELECTION 2 (MAXIMUM)	CONDITION FOR MENU DISPLAY
RESET NAMES / MODULES ?	NO	YES	NO	ALWAYS
CROSSING CONFIGURATION ?	NORMAL	NORMAL	SPLIT GATE (NOTE 2)	ALWAYS
AND1 USED AS XR?	YES	NO	YES	ALWAYS
AND2 USED AS XR?	NO	NO	YES	ALWAYS
AND3 USED AS XR?	NO	NO	YES	ALWAYS
AND4 USED AS XR?	NO	NO	YES	ALWAYS
AND5 USED AS XR?	NO	NO	YES	ALWAYS
AND6 USED AS XR?	NO	NO	YES	ALWAYS
AND7 USED AS XR?	NO	NO	YES	ALWAYS
AND8 USED AS XR?	NO	NO	YES	ALWAYS
XR CONTROLLED BY FOREIGN RR?	NO	AND1	AND8	CROSSING CONFIGURATION = SPIT GATE
ENTRANCE GATES ?	2	0	8	ALWAYS
GATE CONTROLLED BY FOREIGN RR?	NONE	NONE	TSS4	CROSSING CONFIGURATION = SPIT GATE
GATE DESCENT TIME (SECONDS)	11	7	20	GATES > 0
GATE POSITION FAIL TIME (SECONDS) ?	17	10	60	GATES > 0
BATTERY BANKS ?	3	1	3	ALWAYS
BATT MON USED ?	YES	NO	YES	ALWAYS
INTERNAL CROSSING CONTROLLERS ?	2	0	2	ALWAYS
EXTERNAL CROSSING CONTROLLERS ?	0	0	2	CROSSING CONTROLLER = YES
ALLOW DTMF CONTROL ?	YES	NO	YES	ALWAYS
COUNTRY	US	CANADA	US	ALLOW DTMF CONTROL = YES
DTMF CONTROL WITH PREMPTION ?	NO	NO	YES	ALLOW DTMF CONTROL = YES
POK ANNOUNCEMENT TO VHF ?	NO	NO	YES	ALLOW DTMF CONTROL = YES
VHF VOICE CHANNEL ?	1	1	8	ALLOW DTMF CONTROL = YES
VHF DATA CHANNEL ?	1	1	8	ALLOW DTMF CONTROL = YES
DIGIT #1 ?	9	0	9	ALLOW DTMF CONTROL = YES
DIGIT #2 ?	8	0	9	ALLOW DTMF CONTROL = YES
DIGIT #3 ?	6	0	9	ALLOW DTMF CONTROL = YES
DIGIT #4 ?	N/A	0	9	ALLOW DTMF CONTROL = YES
DIGIT #5 ?	N/A	0	9	ALLOW DTMF CONTROL = YES
TIME-OUT FOR DTMF REQUEST #1 ?	180	0	240	ALLOW DTMF CONTROL = YES
TIME-OUT FOR DTMF REQUEST #2 ?	0	0	240	ALLOW DTMF CONTROL = YES
TIME-OUT FOR DTMF REQUEST #3 ?	180	0	240	ALLOW DTMF CONTROL = YES
TIME-OUT FOR DTMF REQUEST #4 ?	180	0	240	ALLOW DTMF CONTROL = YES

STAGE 2 CONT'D

QUESTION	PROGRAM	SELECTION 1 (MINIMUM)	SELECTION 2 (MAXIMUM)	CONDITION FOR MENU DISPLAY
TIME-OUT FOR DTMF REQUEST #5 ?	0	0	240	ALLOW DTMF CONTROL = YES
TIME-OUT FOR DTMF REQUEST #6 ?	0	0	240	ALLOW DTMF CONTROL = YES
TIME-OUT FOR DTMF REQUEST #7 ?	180	0	240	ALLOW DTMF CONTROL = YES
ISLAND RELEASE DTMF REQUEST #1 ?	1	0	6	TIME-OUT FOR DTMF REQUEST #1 > 0
ISLAND RELEASE DTMF REQUEST #2 ?	0	0	6	TIME-OUT FOR DTMF REQUEST #2 > 0
ISLAND RELEASE DTMF REQUEST #3 ?	3	0	6	TIME-OUT FOR DTMF REQUEST #3 > 0
ISLAND RELEASE DTMF REQUEST #4 ?	4	0	6	TIME-OUT FOR DTMF REQUEST #4 > 0
ISLAND RELEASE DTMF REQUEST #5 ?	0	0	6	TIME-OUT FOR DTMF REQUEST #5 > 0
ISLAND RELEASE DTMF REQUEST #6 ?	0	0	6	TIME-OUT FOR DTMF REQUEST #6 > 0
ISLAND RELEASE DTMF REQUEST #7 ?	0	0	6	TIME-OUT FOR DTMF REQUEST #7 > 0
ILOD MODULES ?	2	0	4	ALWAYS
ANY LED BULBS USED ?	YES	NO	YES	ILOD MODULES > 0
AUTO INSPECTION ?	NO	YES	NO	ALWAYS
BELL SENSORS ?	2	0	8	ALWAYS
BELL SENSORS TSS1 ?	YES	NO	YES	BELL SENSORS > 0
BELL SENSORS TSS2 ?	YES	NO	YES	BELL SENSORS > 0
BELL SENSORS TSS3 ?	N/A	NO	YES	BELL SENSORS > 0
BELL SENSORS TSS4 ?	N/A	NO	YES	BELL SENSORS > 0
BELL SENSORS TSS5 ?	N/A	NO	YES	BELL SENSORS > 0
BELL SENSORS TSS6 ?	N/A	NO	YES	BELL SENSORS > 0
BELL SENSORS TSS7 ?	N/A	NO	YES	BELL SENSORS > 0
BELL SENSORS TSS8 ?	N/A	NO	YES	BELL SENSORS > 0
BELL ON ?	GATES LOWERING	GATES LOWERING		BELL SENSORS > 0
		GATES MOVING		
		ALWAYS		
BATTERY PERCENT FOR ALARM ?	85	0	100	ALWAYS
GFT'S ?	YES	YES	NO	ALWAYS
BATTERIES ON GFT1 ?	2	1	2	GFT'S = YES
GATE UP SOURCE ?	GP	TSS	GP	GATE > 0
GATE DOWN SOURCE ?	GD	TIP , TSS	GD	GATES > 0
USE CELL MODEM NON-CRITICAL FEATURE ?	NO	NO	YES	ALWAYS
FULL APPROACH MOVE ALARMS ?	ACTIVATE	ACTIVATE		ALWAYS
		DO NOT ACTIVATE		

YOU WILL NOW SEE A MESSAGE "PLEASE WAIT COMPILING STAGE 2" CONTINUE TO NEXT PROGRAM MENU QUESTIONS.

STAGE 3

PROGRAM MENU QUESTIONS	
EDIT DIGITAL INPUTS	NO
EDIT BATTERIES	NO
EDIT RELAYS	NO
EDIT TEST LEDS	NO
EDIT ILOD SENSORS	NO
EDIT VHF SETTINGS	NO
GCP4K ATCS SUBNODE?	16

SAVE CONFIGURATION

chi-080.90-05.dgn
15-APR-2015

SIEMENS INDUSTRY INC

DES.: NDH	DATE: 03/07/14	JOB NO.: WCNA10383	
CKD.: MRB	ISSUE DATE: N/A	EST. NO.: XP-7261	
DRN.: NDH	PLAN NO.: N/A	SHEET 5 OF 36	
P TIME: 15:49	P DATE: 15-APR-2015	CAD ID.: CHI-080.90-05	

SII 03 JUL 2014

PROPOSED
DESIGN NO. 14-0070
RED-IN YELLOW-OUT

AS INSTALLED
DATE _____
BY _____
(PRINT NAME)

SEARIII EXECUTIVE 9V725 REV. A01U, SEARIII APPLICATION 9VC45 REV. A01A

PROPOSED D	PROPOSED M	PROPOSED Y	REVISIONS	D	C	COMPLETED D	COMPLETED M	COMPLETED Y	C

REGION SOUTHERN
SUB. CHICAGO 340

SIGNALS AND COMMUNICATIONS HOMEWOOD
03 JULY 2014
DES. NDH
CH. MRB

GCP 4000/SEAR III
SETUP & PROGRAM
GILMAN, IL
3RD STREET

CHI-080.90-05

DOT#288 986A

SIEMENS INDUSTRY INC
LOUISVILLE DIVISION, LOUISVILLE, KY

REVISIONS			
NO.	DATE	BY	DESCRIPTION	APP. BY
1				
2				
3				
4				
5				

GCP 4000 CALIBRATION HISTORY

INITIAL SET UP BY: _____ DATE: _____

		APPROACH DISTANCE CALIBRATION										LINEARIZATION CALIBRATION	
		EZ/EX VALUES (TRACK UNOCCUPIED)				HARD WIRE SHUNT AT TERMINATION SHUNT				COMPUTED APPROACH DISTANCE		LINEARIZATION STEP VALUE	
		EZ		EX		EZ		EX					
		NRML	STBY	NRML	STBY	NRML	STBY	NRML	STBY	NRML	STBY	NRML	STBY
NORTH	TRACK 1												
SOUTH	TRACK 1	N/A	N/A	N/A	N/A	N/A	N/A	N/A	N/A	N/A	N/A	N/A	N/A
NORTH	TRACK 2	N/A	N/A	N/A	N/A	N/A	N/A	N/A	N/A	N/A	N/A	N/A	N/A
SOUTH	TRACK 2												
NORTH	TRACK 3												
SOUTH	TRACK 3												
NORTH	TRACK 4												
SOUTH	TRACK 4												
NORTH	TRACK 5	N/A	N/A	N/A	N/A	N/A	N/A	N/A	N/A	N/A	N/A	N/A	N/A
SOUTH	TRACK 5												

GCP 4000 CALIBRATION HISTORY

INITIAL SET UP BY: _____ DATE: _____

		APPROACH DISTANCE CALIBRATION										LINEARIZATION CALIBRATION	
		EZ/EX VALUES (TRACK UNOCCUPIED)				HARD WIRE SHUNT AT TERMINATION SHUNT				COMPUTED APPROACH DISTANCE		LINEARIZATION STEP VALUE	
		EZ		EX		EZ		EX					
		NRML	STBY	NRML	STBY	NRML	STBY	NRML	STBY	NRML	STBY	NRML	STBY
NORTH	TRACK 1												
SOUTH	TRACK 1	N/A	N/A	N/A	N/A	N/A	N/A	N/A	N/A	N/A	N/A	N/A	N/A
NORTH	TRACK 2	N/A	N/A	N/A	N/A	N/A	N/A	N/A	N/A	N/A	N/A	N/A	N/A
SOUTH	TRACK 2												
NORTH	TRACK 3												
SOUTH	TRACK 3												
NORTH	TRACK 4												
SOUTH	TRACK 4												
NORTH	TRACK 5	N/A	N/A	N/A	N/A	N/A	N/A	N/A	N/A	N/A	N/A	N/A	N/A
SOUTH	TRACK 5												

GCP 4000 CALIBRATION HISTORY

INITIAL SET UP BY: _____ DATE: _____

		APPROACH DISTANCE CALIBRATION										LINEARIZATION CALIBRATION	
		EZ/EX VALUES (TRACK UNOCCUPIED)				HARD WIRE SHUNT AT TERMINATION SHUNT				COMPUTED APPROACH DISTANCE		LINEARIZATION STEP VALUE	
		EZ		EX		EZ		EX					
		NRML	STBY	NRML	STBY	NRML	STBY	NRML	STBY	NRML	STBY	NRML	STBY
NORTH	TRACK 1												
SOUTH	TRACK 1	N/A	N/A	N/A	N/A	N/A	N/A	N/A	N/A	N/A	N/A	N/A	N/A
NORTH	TRACK 2	N/A	N/A	N/A	N/A	N/A	N/A	N/A	N/A	N/A	N/A	N/A	N/A
SOUTH	TRACK 2												
NORTH	TRACK 3												
SOUTH	TRACK 3												
NORTH	TRACK 4												
SOUTH	TRACK 4												
NORTH	TRACK 5	N/A	N/A	N/A	N/A	N/A	N/A	N/A	N/A	N/A	N/A	N/A	N/A
SOUTH	TRACK 5												

SII 03 JUL 2014

PROPOSED
DESIGN NO. 14-0070
RED-IN YELLOW-OUT

AS INSTALLED
DATE _____
BY _____
(PRINT NAME)

PROPOSED			REVISIONS	D	C	COMPLETED			C
D	M	Y				D	M	Y	

REGION SOUTHERN
SUB. CHICAGO 340

SIGNALS AND COMMUNICATIONS HOMEWOOD
03 JULY 2014
DES. NDH
CH. MRB

GCP 4000
CALIBRATION HISTORY
GILMAN, IL
3RD STREET

CHI-080.90-06

DOT#288 986A

SIEMENS INDUSTRY INC			
DES.: NDH	DATE: 03/07/14	JOB NO.: WCNA10383	
CKD.: MRB	ISSUE DATE: N/A	EST. NO.: XP-7261	
DRN.: NDH	PLAN NO.: N/A	SHEET 6 OF 36	
P TIME: 15:50	P DATE: 15-APR-2015	CAD ID.: CHI-080.90-06	

SIEMENS INDUSTRY INC
LOUISVILLE DIVISION, LOUISVILLE, KY

chi-080.90-06.dgn
15-APR-2015

REVISIONS				
NO.	DATE	BY	DESCRIPTION	APP. BY
1				
2				
3				
4				
5				

chi-080.90-07.dgn
15-APR-2015

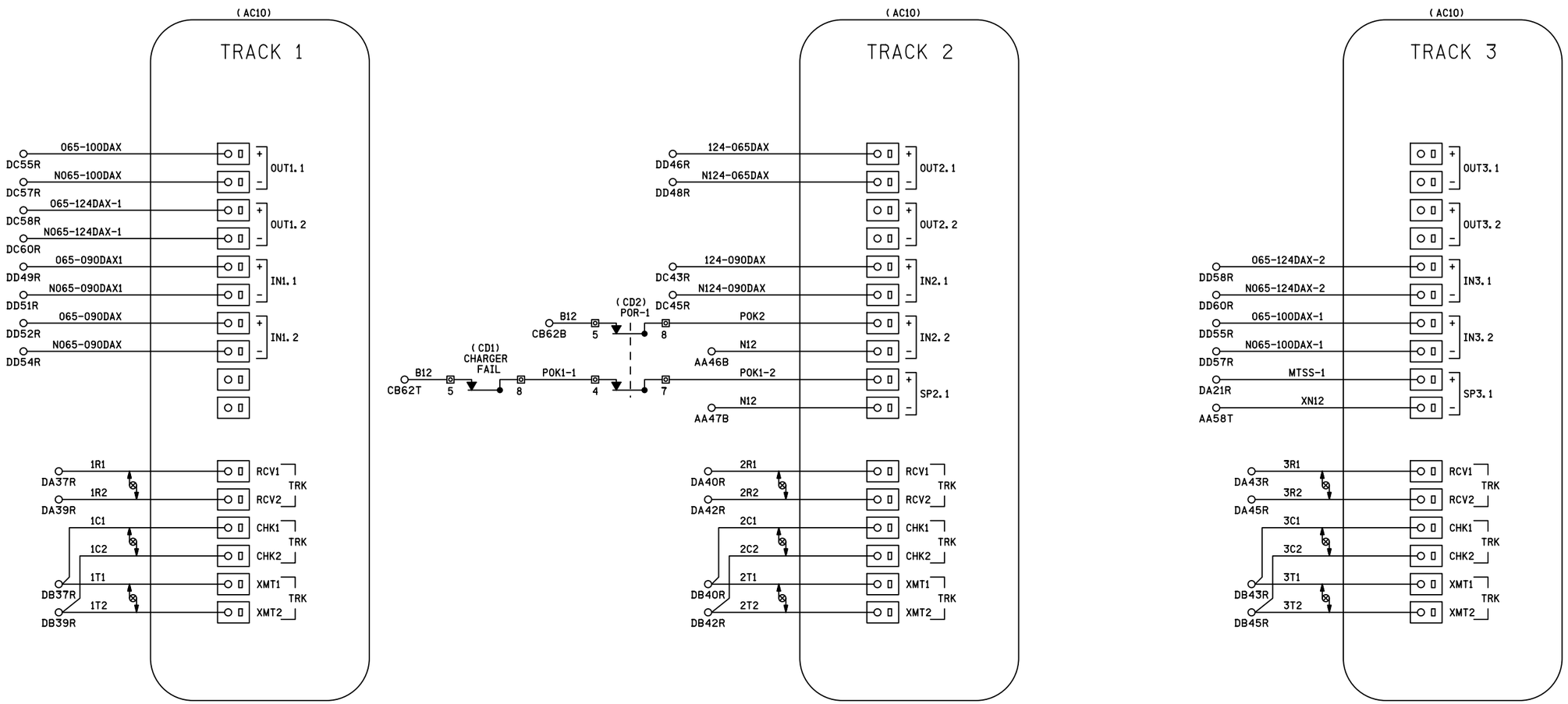

NOTES

1) ALL WIRING #16 AWG UNLESS OTHERWISE NOTED

DENOTES TWISTED PAIR

SII 03 JUL 2014

PROPOSED
DESIGN NO. 14-0070
RED-IN YELLOW-OUT

AS INSTALLED
DATE _____
BY _____
(PRINT NAME)

PROPOSED			REVISIONS	D	C	COMPLETED			C
D	M	Y				D	M	Y	

REGION SOUTHERN
SUB. CHICAGO 340

SIGNALS AND COMMUNICATIONS
HOMEWOOD
03 JULY 2014

DES. NDH
CH. MRB

GCP 4000
TRACK 1, 2 & 3 MODULE CONNECTIONS
GILMAN, IL
3RD STREET

CHI-080.90-07

DOT#288 986A

SIEMENS INDUSTRY INC

DES. : NDH	DATE: 03/07/14	JOB NO. : WCNA10383	
CKD. : MRB	ISSUE DATE: N/A	EST. NO. : XP-7261	
DRN. : NDH	PLAN NO. : N/A	SHEET 7 OF 36	
P TIME: 15:50	P DATE: 15-APR-2015	CAD ID. : CHI-080.90-07	

SIEMENS INDUSTRY INC
LOUISVILLE DIVISION, LOUISVILLE, KY

REVISIONS				
NO.	DATE	BY	DESCRIPTION	APP. BY
1				
2				
3				
4				
5				

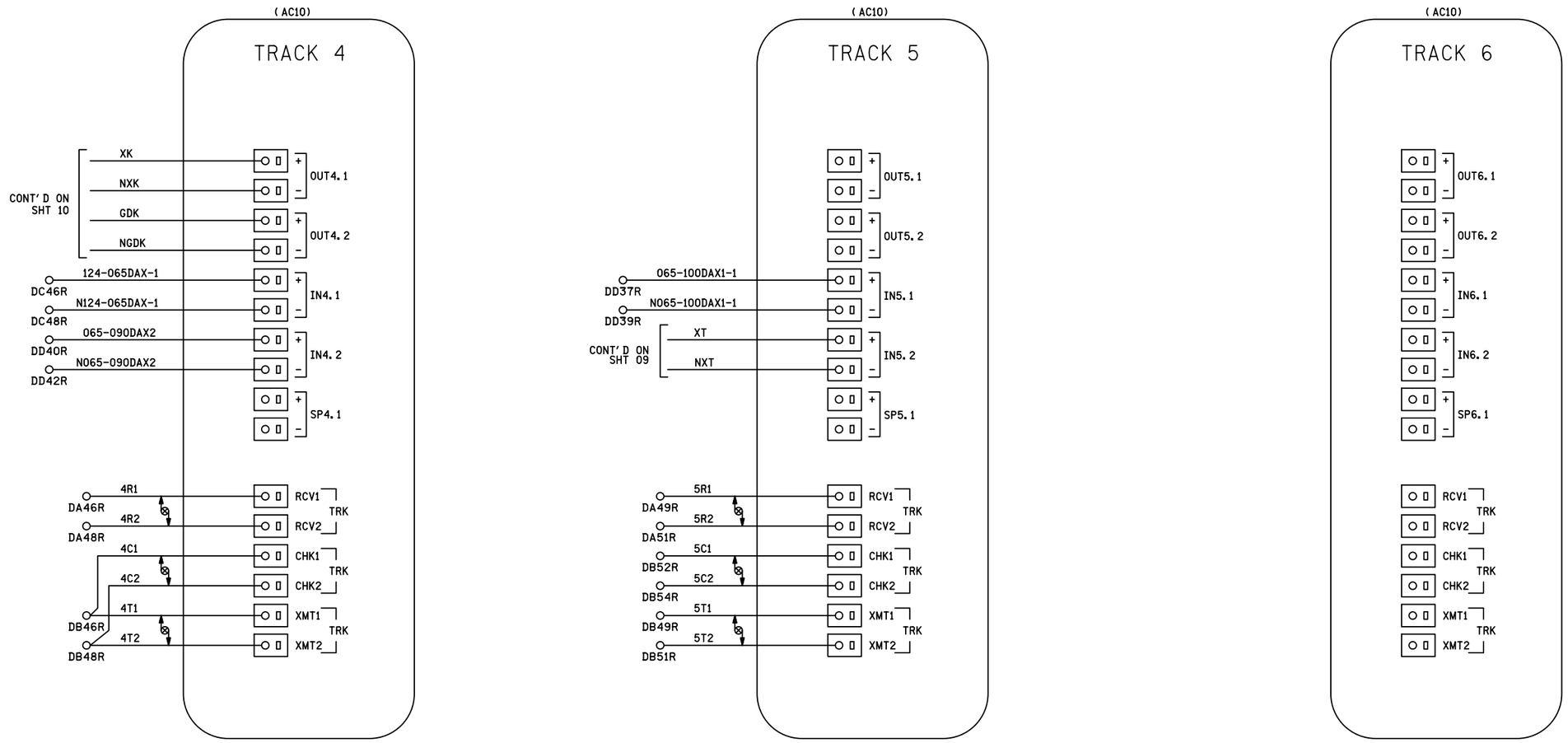

NOTES

1) ALL WIRING #16 AWG UNLESS OTHERWISE NOTED

DENOTES TWISTED PAIR

SII 03 JUL 2014

PROPOSED
DESIGN NO. 14-0070
RED-IN YELLOW-OUT

AS INSTALLED
DATE _____
BY _____
(PRINT NAME)

PROPOSED			REVISIONS	D	C	COMPLETED			C
D	M	Y				D	M	Y	

REGION SOUTHERN
SUB. CHICAGO 340

SIGNALS AND COMMUNICATIONS HOMEWOOD
03 JULY 2014
DES. NDH
CH. MRB

GCP 4000
TRACK 4, 5 & 6 MODULE CONNECTIONS
GILMAN, IL
3RD STREET

CHI-080.90-08

DOT#288 986A

SIEMENS INDUSTRY INC

DES.: NDH	DATE: 03/07/14	JOB NO.: WCNA10383	
CKD.: MRB	ISSUE DATE: N/A	EST. NO.: XP-7261	
DRN.: NDH	PLAN NO.: N/A	SHEET 8 OF 36	
P TIME: 15:50	P DATE: 15-APR-2015	CAD ID.: CHI-080.90-08	

SIEMENS INDUSTRY INC
LOUISVILLE DIVISION, LOUISVILLE, KY

chi-080.90-08.dgn
15-APR-2015

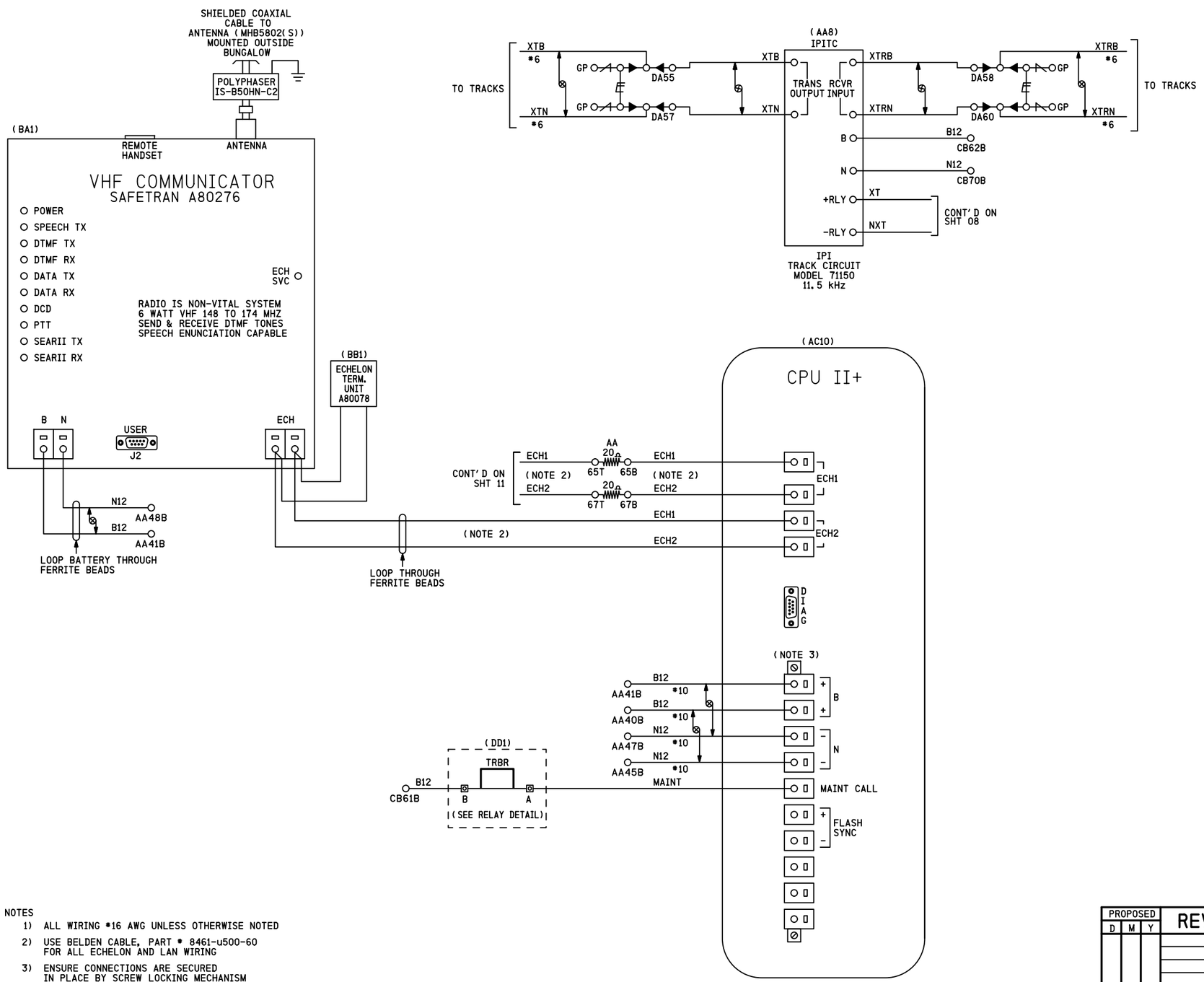

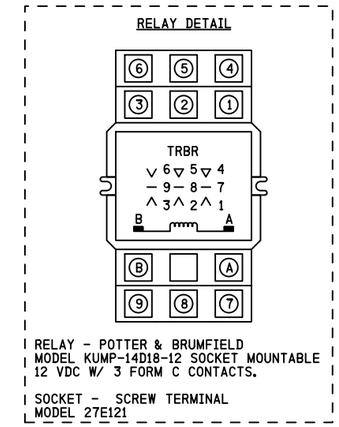

NOTES

1) ALL WIRING #16 AWG UNLESS OTHERWISE NOTED
2) USE BELDEN CABLE, PART # 8461-u500-60 FOR ALL ECHELON AND LAN WIRING
3) ENSURE CONNECTIONS ARE SECURED IN PLACE BY SCREW LOCKING MECHANISM

DENOTES TWISTED PAIR

GP L C R -DENOTES THRU TERMINAL

SII 03 JUL 2014

PROPOSED
DESIGN NO. 14-0070
RED-IN YELLOW-OUT

AS INSTALLED
DATE
BY
(PRINT NAME)

PROPOSED D	M	Y	REVISIONS	D	C	COMPLETED D	M	Y	C

REGION SOUTHERN
SUB. CHICAGO 340

SIGNALS AND COMMUNICATIONS HOMEWOOD
03 JULY 2014
DES. NDH
CH. MRB

GCP 4000
CPUII+ & VHF COMMUNICATOR
GILMAN, IL
3RD STREET

CHI-080.90-09

DOT#288 986A

REVISIONS				
NO.	DATE	BY	DESCRIPTION	APP. BY
1				
2				
3				
4				
5				

SIEMENS INDUSTRY INC
DES.: NDH
CKD.: MRB
DRN.: NDH
P TIME:15:50
DATE: 03/07/14
ISSUE DATE: N/A
PLAN NO.: N/A
P DATE: 15-APR-2015
JOB NO.: WCNA10383
EST. NO.: XP-7261
SHEET 9 OF 36
CAD ID.: CHI-080.90-09

SIEMENS INDUSTRY INC
LOUISVILLE DIVISION, LOUISVILLE, KY

chi-080.90-09.dgn
15-APR-2015