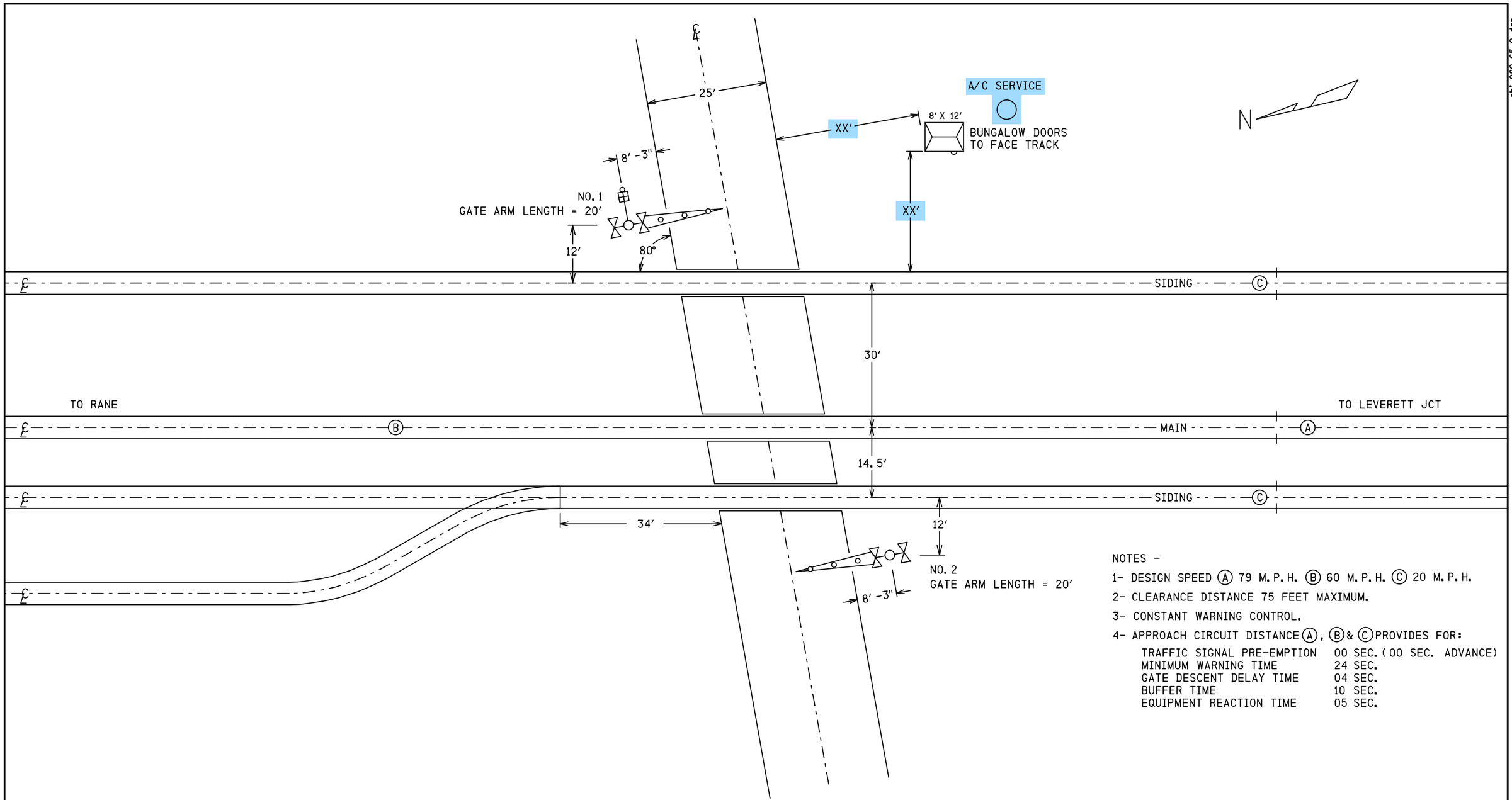

NOTES -

1- DESIGN SPEED (A) 79 M.P.H. (B) 60 M.P.H. (C) 20 M.P.H.

2- CLEARANCE DISTANCE 75 FEET MAXIMUM.

3- CONSTANT WARNING CONTROL.

4- APPROACH CIRCUIT DISTANCE (A), (B) & (C) PROVIDES FOR:

TRAFFIC SIGNAL PRE-EMPTION	00 SEC. (00 SEC. ADVANCE)
MINIMUM WARNING TIME	24 SEC.
GATE DESCENT DELAY TIME	04 SEC.
BUFFER TIME	10 SEC.
EQUIPMENT REACTION TIME	05 SEC.

TO BE CONFIRMED

CONFIRMED

DATE _____

BY _____

(PRINT NAME)

PROPOSED D	PROPOSED M	PROPOSED Y	REVISIONS	D	C	COMPLETED D	COMPLETED M	COMPLETED Y	C
			PLAN REDRAWN			15	03	13	KLT

REGION SOUTHERN

SUB. CHICAGO 340

SIGNALS AND COMMUNICATIONS HOMEWOOD

DES.

CH.

SITUATION SKETCH
SCALE 1" = 20′
GILMAN, IL

6TH STREET

CHI-080.65-0

DOT#288 985T

42

chi-080.65-0.dgn
17-JUN-2015

SIEMENS INDUSTRY INC
LOUISVILLE DIVISION, LOUISVILLE, KY

REVISIONS				
NO.	DATE	BY	DESCRIPTION	APP. BY
1				
2				
3				
4				
5				

FLASHING LIGHT UNITS ALIGNMENT TABLE

PRIMARY FRONT LIGHTS FOR VEHICLES							
SIG #	LIGHT #	ROUNDEL		ROAD SPEED	MINIMUM DISTANCE	RECOMMENDED DISTANCE	ALIGNMENT DISTANCE
		SIZE	TYPE	MPH	FT	FT	FT
1	1,2	12"	LED	30	270	450	
2	7,8	12"	LED	30	270	450	
BACK LIGHTS FOR VEHICLES							
SIG #	LIGHT #	ROUNDEL		ROAD SPEED	MINIMUM DISTANCE	RECOMMENDED DISTANCE	ALIGNMENT DISTANCE
		SIZE	TYPE	MPH	FT	FT	FT
1	3,4	12"	LED	N/A	N/A	N/A	50
2	5,6	12"	LED	N/A	N/A	N/A	50

NOTE
FIELD IS TO PROVIDE THE ACTUAL ALIGNMENT DISTANCE AS DETERMINED BY SCP-706: ROAD CROSSING DEVICE LIGHT UNIT ALIGNMENT PROCEDURES

SII 03 JUL 2014

PROPOSED
DESIGN NO. 13-0120
RED-IN YELLOW-OUT

AS INSTALLED
DATE _____
BY _____
(PRINT NAME)

TO BE CONFIRMED

CONFIRMED
DATE _____
BY _____
(PRINT NAME)

SERVICE

3C*6 TECK90	C1 TO BUNGALOW
3C*6 TECK90	C1A TO SCD 1A
3C*6 TECK90	C1B TO SCD 1B

BUNGALOW

		2SC*6TW	2SC*6TW — C5 TO 2-1R
C2	TO 1-1R	2SC*6TW	2SC*6TW — C6 TO 2-1T
C3	TO 1-3R	2SC*6TW	2SC*6TW — C7 TO 2-1C
C4	TO 1-5R	16C(7*6,9*14)	2SC*6TW — C8 TO 1-1T
C24	TO SIG NO. 1	16C(7*6,9*14)	2SC*6TW — C9 TO 1-2T
C25	TO SIG NO. 2	19C*14	2SC*6TW — C10 TO 1-2R
REUSED C38	TO M.079.77	5C*9	2SC*6TW — C11 TO 3ATR
EXISTING C39	TO M.080.56		2SC*6TW — C12 TO 4SATR
			2SC*6TW — C13 TO 1-3T
			2SC*6TW — C14 TO 1-3C
			2SC*6TW — C15 TO 1-4T
			2SC*6TW — C16 TO 1-4R
			2SC*6TW — C17 TO 3TR
			2SC*6TW — C18 TO 2SAT
			2SC*6TW — C19 TO 6SATR
			2SC*6TW — C20 TO 1-5T
			2SC*6TW — C21 TO 1-6T
			2SC*6TW — C22 TO 1-6R
			2SC*6TW — C23 TO 1TB
			7C*6 — C26 TO SIG. 2SA
			7C*6 — C27 TO SIG. 2SB
			7C*6 — C28 TO SIG. 4SA
			7C*6 — C29 TO SIG. 4SB
			7C*6 — C30 TO SIG. 6SA
			7C*6 — C31 TO SIG. 6SB
			16C(7*6,9*14) — C32 TO SWITCH 1A
			16C(7*6,9*14) — C33 TO SWITCH 1B
			8C(2*10,6*14) — C34 TO SCD 1A
			8C(2*10,6*14) — C35 TO SCD 1B
			8C(2*10,6*14) — C36 TO M.080.90
			8C(2*10,6*14) — C37 TO M.080.90
			FIBER — TO REMOTE 2 M.080.90
			FIBER — TO REMOTE 4 M.081.25

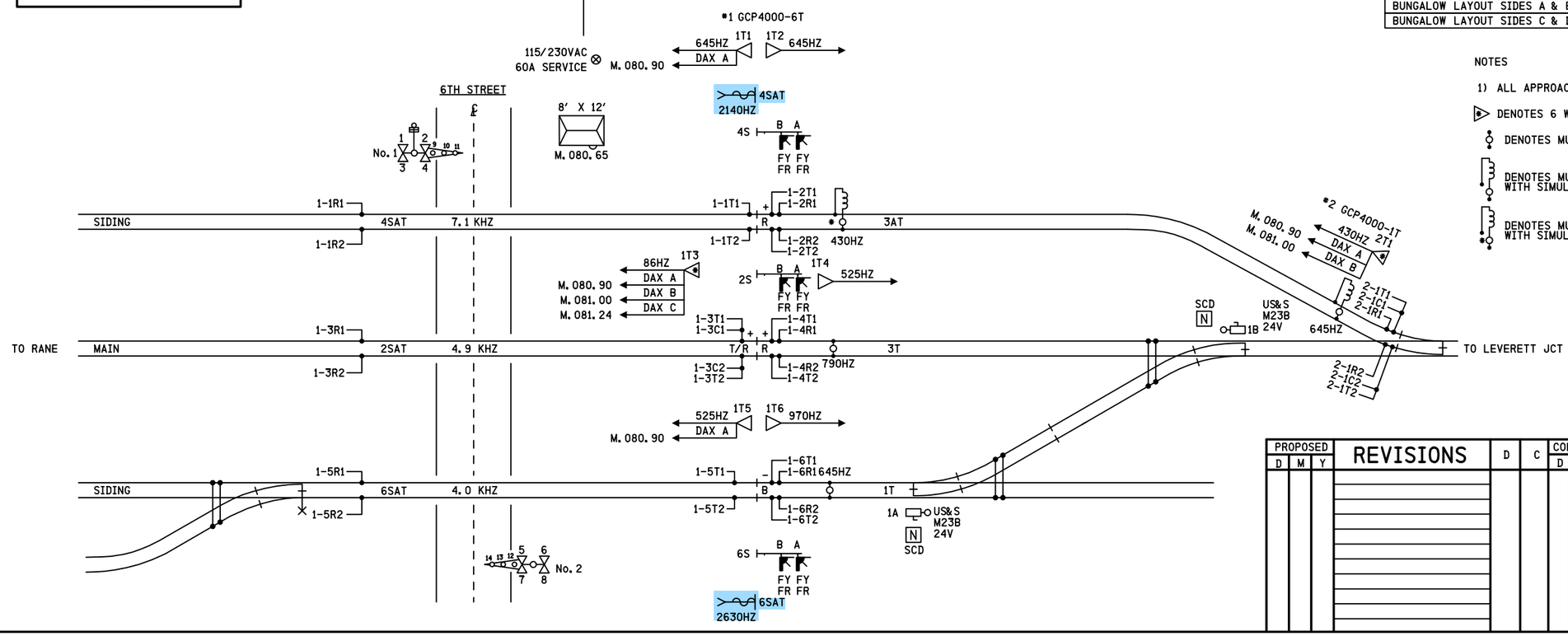

CONTENT	SHEET NO.
SITUATION SKETCH	0
TRACK LAYOUT & INDEX	01
GCP 4000 UNIT *1 CHASSIS & MODULE LAYOUT	02
GCP 4000 UNIT *1 PROGRAM INFORMATION	03
GCP 4000 UNIT *1 PROGRAM INFORMATION	04
GCP 4000 UNIT *1/SEAR III SETUP & PROGRAM	05
GCP 4000 UNIT *1 CALIBRATION HISTORY	06
GCP 4000 UNIT *1 TRACK 1,2 & 3 MODULE CONNECTIONS	07
GCP 4000 UNIT *1 TRACK 4,5 & 6 MODULE CONNECTIONS	08
GCP 4000 UNIT *1 CPUII+ & VHF COMMUNICATOR	09
GCP 4000 UNIT *1 SEAR III WITH GFT & CRTU	10
GCP 4000 UNIT *2 CHASSIS & MODULE LAYOUT	11
GCP 4000 UNIT *2 PROGRAM INFORMATION	12
GCP 4000 UNIT *2/SEAR III SETUP & PROGRAM	13
GCP 4000 UNIT *2 CALIBRATION HISTORY	14
GCP 4000 UNIT *2 TRACK 1 & 2 CPU II MODULE CONNECTIONS	15
GCP 4000 UNIT *2 SEAR III	16
GCP 4000 UNIT *1/SSCCIIII GATE CONTROLLERS W/ ILODS	17
GATE 1&2 MECH. CONTROL CIRCUITS SAFETRAN S-60	18
TRACK CIRCUITS	19
2S SIG CONTROL CIRCUITS	20
4S SIG CONTROL CIRCUITS	21
6S SIG CONTROL CIRCUITS	22
1A SWITCH CONTROL & INDICATION CIRCUITS	23
1B SWITCH CONTROL & INDICATION CIRCUITS	24
MISC. & SCD CIRCUITS	25
IXS VLC HARDWARE CONFIG.	26
IXS VLC PERSONALITY MODULE CONNECTIONS	27
IXS VLC CHASSIS ID & VITAL CONFIGURATION SETTINGS	28
IXS VLC COMMUNICATION CIRCUITS	29
*1A SCD CONTROL & INDICATION CIRCUITS	30
*1B SCD CONTROL & INDICATION CIRCUITS	31
DC DISTRIBUTION	32
DC DISTRIBUTION	33
AC DISTRIBUTION	34
BUNGALOW LAYOUT TOP VIEW	35
ENTRANCE BOARD L.I.G.P. INSIDE	36
ENTRANCE BOARD L.I.G.P. INSIDE	37
ENTRANCE BOARD L.I.G.P. OUTSIDE	38
ENTRANCE BOARD L.I.G.P. OUTSIDE	39
BUNGALOW LAYOUT SIDES A & B	40
BUNGALOW LAYOUT SIDES C & D	41

NOTES

1) ALL APPROACH DISTANCES MEASURED FROM TRACK LEADS

DENOTES 6 WIRE TRACK CONNECTION

DENOTES MULTIFREQUENCY NARROW-BAND SHUNT *62775-3497

DENOTES MULTIFREQUENCY NARROW-BAND SHUNT *62775-3497 WITH SIMULATED TRACK INDUCTOR 8V617-0200

DENOTES MULTIFREQUENCY NARROW-BAND SHUNT *62775-3497 WITH SIMULATED TRACK INDUCTOR 8V617-1000

chi-080.65-01.dgn
17-JUN-2015

SIEMENS INDUSTRY INC			
DES.: TMF	DATE: 03/07/14	JOB NO.: WCNA10381	
CKD.: MRB	ISSUE DATE: N/A	EST. NO.: 1GDXP07259	
DRN.: TMF	PLAN NO.: N/A	SHEET 1 OF 41	
P TIME: 11:35	P DATE: 17-JUN-2015	CAD ID.: CHI-080.65-01	

PROPOSED			REVISIONS	D	C	COMPLETED			C
D	M	Y				D	M	Y	

REGION SOUTHERN
SUB. CHICAGO 340
SIGNALS AND COMMUNICATIONS HOMEWOOD
DES. TMF
03 JULY 2014
CH. MRB
TRACK LAYOUT & INDEX
GILMAN, IL
6TH STREET
CHI-080.65-01

SIEMENS INDUSTRY INC
LOUISVILLE DIVISION, LOUISVILLE, KY

DOT#288 985T

REVISIONS				
NO.	DATE	BY	DESCRIPTION	APP. BY
1				
2				
3				
4				
5				

UNIT #1

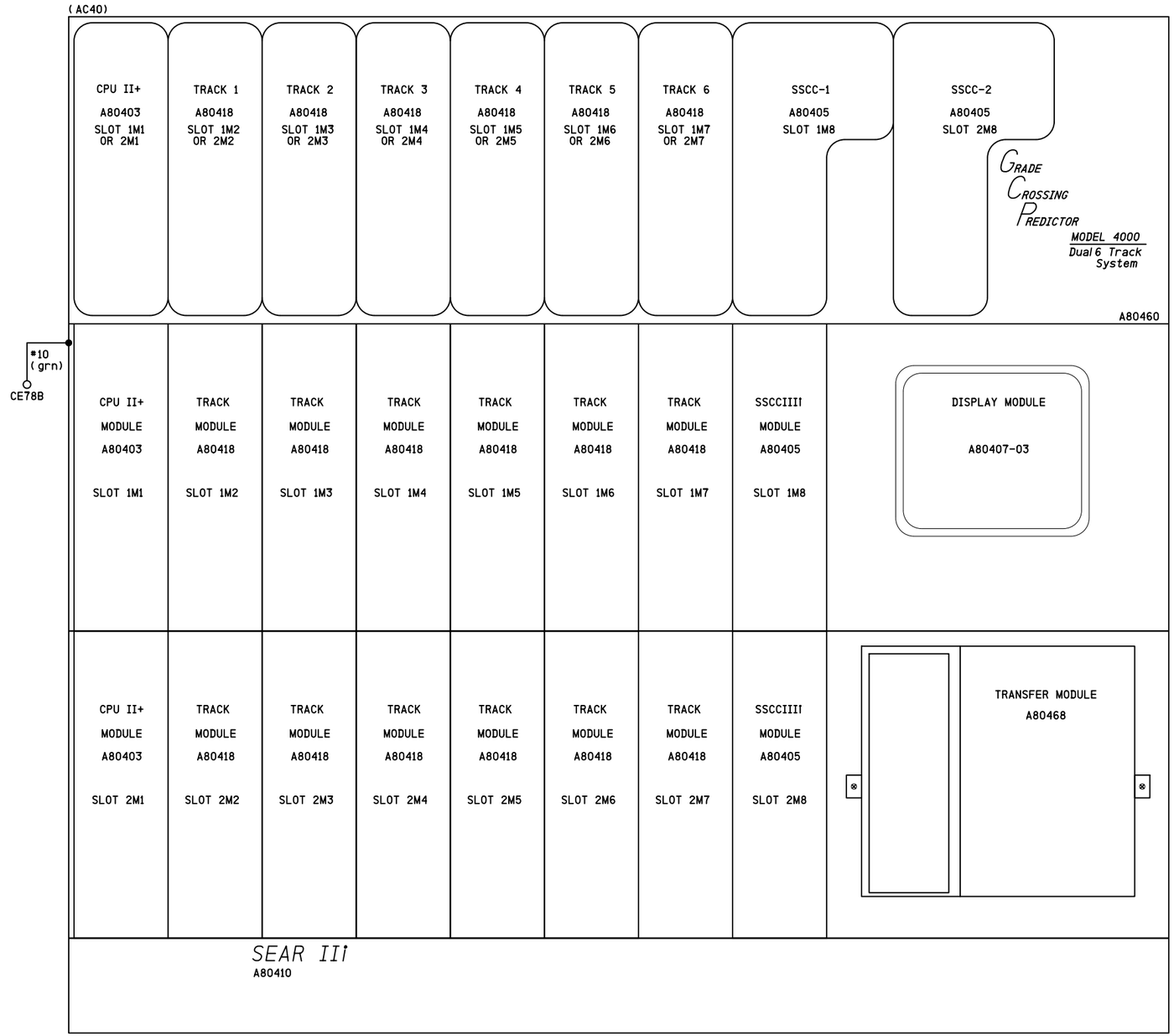

NOTES

1) DISABLE THE DISPLAY HEATER BY REMOVING JUMPER J-22 (LOCATED AT THE EDGE OF THE DISPLAY MODULE CARD THAT PLUGS INTO THE CHASSIS)

2) SET THE TRANSFER INTERVAL TIME TO 3 MINUTES BY SETTING DIPSWITCH S3 (LOCATED IN THE UPPER LEFT CORNER OF THE TRANSFER MODULE CARD) TO:

S3-0	S3-1	S3-2	S3-3	S3-4
1	1	0	0	0

WHERE 0 = UP/OPEN
1 = DOWN/CLOSED

ATTENTION!

ENSURE THE DISPLAY MODULE HEATER IS DISABLED
LEAVING THE DISPLAY HEATER ENABLED WILL REDUCE THE AMOUNT OF BATTERY STANDBY TIME IN THE EVENT OF AN AC POWER FAILURE

HEATER FUNCTION IS JUMPER SELECTABLE ON THE DISPLAY MODULE BOARD
THREE OPTIONS ARE AVAILABLE
NORMAL LCD HTR (DEFAULT)
HI CURRENT
NO JUMPER (HEATER DISABLED)

SII 03 JUL 2014

PROPOSED
DESIGN NO. 13-0120
RED-IN YELLOW-OUT

AS INSTALLED
DATE _____
BY _____
(PRINT NAME)

PROPOSED D	M	Y	REVISIONS	D	C	COMPLETED D	M	Y	C

REGION SOUTHERN
SUB. CHICAGO 340

SIGNALS AND COMMUNICATIONS HOMEWOOD
03 JULY 2014
DES. TMF
CH. MRB

GCP 4000 UNIT #1
CHASSIS & MODULE LAYOUT
GILMAN, IL
6TH STREET

CHI-080.65-02

DOT#288 985T

SIEMENS INDUSTRY INC

DES.: TMF	DATE: 03/07/14	JOB NO.: WCNA10381	
CKD.: MRB	ISSUE DATE: N/A	EST. NO.: GDXP07259	
DRN.: TMF	PLAN NO.: N/A	SHEET 2 OF 41	
P TIME: 11:35	P DATE: 17-JUN-2015	CAD ID.: CHI-080.65-02	

SIEMENS INDUSTRY INC
LOUISVILLE DIVISION, LOUISVILLE, KY

chi-080.65-02.dgn
17-JUN-2015

REVISIONS				
NO.	DATE	BY	DESCRIPTION	APP. BY
1				
2				
3				
4				
5				

Program Report

Location and SIN

DOT Number: 288985T
Milepost Number: 080.65
Site Name: 6TH STREET

SIN: 762010010016

MCF and Template Selection

MCF Name: GCP-T6X-02-2.mcf
MCF Revision: 022
MCFCRC: 79225F13

Template = 2B:3 Bi, 3 Rem (OCCN)

Check Numbers

Office Check Number: 02F00432
Config. Check Number: 194A6E2B
(Based on MCF Revision 022)

Program

BASIC: module configuration
Track 1/PSO 1 Slot = Track (OCCN)
Track 2/RIO 1 Slot = Track (OCCN)
Track 3/PSO 2 Slot = Track (OCCN)
Track 4/PSO 3 Slot = Track (OCCN)
Track 5/RIO 2 Slot = Track (OCCN)
Track 6/RIO 3 Slot = Track (OCCN)
SSCC-1 Slot = SSCC31(OCCN)
SSCC-2 Slot = SSCC31(OCCN)
SEAR Used = Yes (OCCN)

BASIC: MS/GCP operation
Track 1 : MS/GCP Operation = Yes (OCCN)
Track 2 : MS/GCP Operation = Yes (OCCN)
Track 3 : MS/GCP Operation = Yes (OCCN)
Track 4 : MS/GCP Operation = Yes (OCCN)
Track 5 : MS/GCP Operation = Yes (OCCN)
Track 6 : MS/GCP Operation = Yes (OCCN)

BASIC: Island operation
Track 1 : Island Used = Internal(OCCN)
Track 2 : Island Used = No (OCCN)
Track 3 : Island Used = Internal(OCCN)
Track 4 : Island Used = No (OCCN)
Track 5 : Island Used = Internal(OCCN)
Track 6 : Island Used = No (OCCN)

BASIC: preemption
Preempt Logic = No (OCCN)

BASIC: radio Dax links
Radio DAX link A Used = No (OCCN)
Radio DAX link B Used = No (OCCN)

BASIC: Vital Comms links
Vital Comms link 1 Used = No (OCCN)
Vital Comms link 2 Used = No (OCCN)

PREDICTORS: track 1
Track 1 : Prime Used = Yes (OCCN)
Track 1 : Dax A Used = Yes (OCCN)
Track 1 : Dax B Used = No (OCCN)
Track 1 : Dax C Used = No (OCCN)
Track 1 : Dax D Used = No (OCCN)
Track 1 : Dax E Used = No (OCCN)
Track 1 : Dax F Used = No (OCCN)
Track 1 : Dax G Used = No (OCCN)

PREDICTORS: track 2
Track 2 : Prime Used = Yes (OCCN)
Track 2 : Dax A Used = No (OCCN)
Track 2 : Dax B Used = No (OCCN)
Track 2 : Dax C Used = No (OCCN)
Track 2 : Dax D Used = No (OCCN)
Track 2 : Dax E Used = No (OCCN)
Track 2 : Dax F Used = No (OCCN)
Track 2 : Dax G Used = No (OCCN)

PREDICTORS: track 3
Track 3 : Prime Used = Yes (OCCN)
Track 3 : Dax A Used = Yes (OCCN)
Track 3 : Dax B Used = Yes (OCCN)
Track 3 : Dax C Used = Yes (OCCN)
Track 3 : Dax D Used = No (OCCN)
Track 3 : Dax E Used = No (OCCN)
Track 3 : Dax F Used = No (OCCN)
Track 3 : Dax G Used = No (OCCN)

PREDICTORS: track 4
Track 4 : Prime Used = Yes (OCCN)
Track 4 : Dax A Used = No (OCCN)
Track 4 : Dax B Used = No (OCCN)
Track 4 : Dax C Used = No (OCCN)
Track 4 : Dax D Used = No (OCCN)
Track 4 : Dax E Used = No (OCCN)
Track 4 : Dax F Used = No (OCCN)
Track 4 : Dax G Used = No (OCCN)

PREDICTORS: track 5
Track 5 : Prime Used = Yes (OCCN)
Track 5 : Dax A Used = Yes (OCCN)
Track 5 : Dax B Used = No (OCCN)
Track 5 : Dax C Used = No (OCCN)
Track 5 : Dax D Used = No (OCCN)
Track 5 : Dax E Used = No (OCCN)
Track 5 : Dax F Used = No (OCCN)
Track 5 : Dax G Used = No (OCCN)

PREDICTORS: track 6
Track 6 : Prime Used = Yes (OCCN)
Track 6 : Dax A Used = No (OCCN)
Track 6 : Dax B Used = No (OCCN)
Track 6 : Dax C Used = No (OCCN)
Track 6 : Dax D Used = No (OCCN)
Track 6 : Dax E Used = No (OCCN)
Track 6 : Dax F Used = No (OCCN)
Track 6 : Dax G Used = No (OCCN)

GCP: track 1
Track 1 : GCP Freq Category = Standard (Field)
Track 1 : GCP Frequency = 645 Hz (Field,TCN)
Track 1 : Approach Distance = 1150 ft (Field,TCN)
Track 1 : Uni/Bi/Sim-Bidirni = Unidirni(OCCN,TCN)
Track 1 : GCP Transmit Level = High (Field,TCN)
Track 1 : Island Connection = Isl1(OCCN)
Track 1 : Directionally Wired = No (OCCN)
Track 1 : Island Distance = 165 ft (Field,TCN)
Track 1 : Computed Distance = 9999 ft (Field,TCN)
Track 1 : Linearization Steps = 100 (Field,TCN)

GCP: track 1 enhanced det
Track 1 : Inbound PS Sensitivity = High (Field)
Track 1 : Speed Limiting Used = Yes (Field)
Track 1 : Outbound False Act Lvl= Normal(Field)
Track 1 : Outbound PS Timer = 20 sec (Field)
Track 1 : Trailing Switch Logic = On (Field)
Track 1 : Post Joint Detn Time = 15 sec (OCCN)
Track 1 : Adv Appr Predn = No (OCCN)
Track 1 : Cancel Pickup Delay = This Isl(OCCN)

GCP: track 1 BIDAX RX
Track 1 : BIDAX To RX Appr = Not Used (OCCN)

GCP: track 1 BIDAX TX
Track 1 : BIDAX To TX Appr = Not Used (OCCN)

GCP: track 1 prime
Track 1 : Prime Warning Time = 34 sec (OCCN)
Track 1 : Prime Offset Distance = 0 ft (Field)
Track 1 : Switch MS EZ Level = 24 (OCCN)
Track 1 : Prime MS/GCP Mode = Pred (OCCN)
Track 1 : Prime Pickup Delay = 30 sec (OCCN)
Track 1 : Prime UAX = Not Used (OCCN)

GCP: track 1 Dax A
Track 1 : Dax A Warning Time = 32 sec (OCCN)
Track 1 : Dax A Offset Distance = 1357 ft (Field)
Track 1 : Switch MS EZ Level = 0 (OCCN)
Track 1 : Pickup Delay Mode = Auto (OCCN)
Track 1 : Dax A MS/GCP Mode = Pred (OCCN)
Track 1 : Dax A Pickup Delay = 8 sec (OCCN)
Track 1 : Dax A Enable = Not Used (OCCN)

GCP: track 1 pos start
Track 1 : Positive Start = Off (OCCN)
Track 1 : Sudden Shnt Det Used = No (OCCN)
Track 1 : Low EZ Detection Used = No (OCCN)

GCP: track 1 MS Control
Track 1 : MS/GCP CtrlIP Used = No (OCCN)
Track 1 : MS Sensitivity Level= 0 (Field)
Track 1 : Compensation Level= 1300 (Field,TCN)
Track 1 : Warn Time-Ballast Comp = High (Field,TCN)
Track 1 : Low EX Adjustment = 39 (Field)
Track 1 : Bidirn Dax Passthru = No (OCCN)
Track 1 : False Act on Train Stop = No (Field)
Track 1 : EX Limiting Used = Yes (Field)
Track 1 : EZ Correction Used = Yes (Field)

GCP: track 2
Track 2 : GCP Freq Category = Standard (Field)
Track 2 : GCP Frequency = 645 Hz (Field,TCN)
Track 2 : Approach Distance = 865 ft (Field,TCN)
Track 2 : Uni/Bi/Sim-Bidirni= Unidirni(OCCN,TCN)
Track 2 : GCP Transmit Level= High (Field,TCN)
Track 2 : Island Connection = Isl1(OCCN)
Track 2 : Directionally Wired = No (OCCN)
Track 2 : Island Distance = 0 ft (Field,TCN)
Track 2 : Computed Distance = 9999 ft (Field,TCN)
Track 2 : Linearization Steps = 100 (Field,TCN)

GCP: track 2 enhanced det
Track 2 : Inbound PS Sensitivity = High (Field)
Track 2 : Speed Limiting Used = Yes (Field)
Track 2 : Outbound False Act Lvl= Normal(Field)
Track 2 : Outbound PS Timer = 20 sec (Field)
Track 2 : Trailing Switch Logic = On (Field)
Track 2 : Post Joint Detn Time = 15 sec (OCCN)
Track 2 : Adv Appr Predn = No (OCCN)
Track 2 : Cancel Pickup Delay = This Isl(OCCN)

GCP: track 2 BIDAX RX
Track 2 : BIDAX To RX Appr = Not Used (OCCN)

GCP: track 2 BIDAX TX
Track 2 : BIDAX To TX Appr = Not Used (OCCN)

GCP: track 2 prime
Track 2 : Prime Warning Time = 34 sec (OCCN)
Track 2 : Prime Offset Distance = 0 ft (Field)
Track 2 : Switch MS EZ Level= 26 (OCCN)
Track 2 : Prime MS/GCP Mode = Pred (OCCN)
Track 2 : Prime Pickup Delay = 30 sec (OCCN)
Track 2 : Prime UAX = Not Used (OCCN)

GCP: track 2 pos start
Track 2 : Positive Start = Off (OCCN)
Track 2 : Sudden Shnt Det Used = No (OCCN)
Track 2 : Low EZ Detection Used = No (OCCN)

GCP: track 2 MS Control
Track 2 : MS/GCP CtrlIP Used = No (OCCN)
Track 2 : MS Sensitivity Level= 0 (Field)
Track 2 : Compensation Level= 1300 (Field,TCN)
Track 2 : Warn Time-Ballast Comp = Low (Field,TCN)
Track 2 : Low EX Adjustment = 39 (Field)
Track 2 : Bidirn Dax Passthru = No (OCCN)
Track 2 : False Act on Train Stop = No (Field)
Track 2 : EX Limiting Used = Yes (Field)
Track 2 : EZ Correction Used = Yes (Field)

GCP: track 3
Track 3 : GCP Freq Category = Standard (Field)
Track 3 : GCP Frequency = 86 Hz (Field,TCN)
Track 3 : Approach Distance = 3450 ft (Field,TCN)
Track 3 : Uni/Bi/Sim-Bidirni= Unidirni(OCCN,TCN)
Track 3 : GCP Transmit Level= High (Field,TCN)
Track 3 : Island Connection = Isl3(OCCN)
Track 3 : Directionally Wired = No (OCCN)
Track 3 : Island Distance = 165 ft (Field,TCN)
Track 3 : Computed Distance = 9999 ft (Field,TCN)
Track 3 : Linearization Steps = 100 (Field,TCN)

GCP: track 3 enhanced det
Track 3 : Inbound PS Sensitivity = High (Field)
Track 3 : Speed Limiting Used = Yes (Field)
Track 3 : Outbound False Act Lvl= Normal(Field)
Track 3 : Outbound PS Timer = 20 sec (Field)
Track 3 : Trailing Switch Logic = On (Field)
Track 3 : Post Joint Detn Time = 15 sec (OCCN)
Track 3 : Adv Appr Predn = No (OCCN)
Track 3 : Cancel Pickup Delay = This Isl(OCCN)

GCP: track 3 BIDAX RX
Track 3 : BIDAX To RX Appr = Not Used (OCCN)

GCP: track 3 BIDAX TX
Track 3 : BIDAX To TX Appr = Not Used (OCCN)

GCP: track 3 prime
Track 3 : Prime Warning Time = 34 sec (OCCN)
Track 3 : Prime Offset Distance = 0 ft (Field)
Track 3 : Switch MS EZ Level= 9 (OCCN)
Track 3 : Prime MS/GCP Mode = Pred (OCCN)
Track 3 : Prime Pickup Delay = 30 sec (OCCN)
Track 3 : Prime UAX = Not Used (OCCN)

GCP: track 3 Dax A
Track 3 : Dax A Warning Time = 32 sec (OCCN)
Track 3 : Dax A Offset Distance = 1357 ft (Field)
Track 3 : Switch MS EZ Level= 0 (OCCN)
Track 3 : Pickup Delay Mode = Auto (OCCN)
Track 3 : Dax A MS/GCP Mode = Pred (OCCN)
Track 3 : Dax A Pickup Delay = 8 sec (OCCN)
Track 3 : Dax A Enable = Not Used (OCCN)

GCP: track 3 Dax B
Track 3 : Dax B Warning Time = 42 sec (OCCN)
Track 3 : Dax B Offset Distance = 1906 ft (Field)
Track 3 : Switch MS EZ Level= 0 (OCCN)
Track 3 : Pickup Delay Mode = Auto (OCCN)
Track 3 : Dax B MS/GCP Mode = Pred (OCCN)
Track 3 : Dax B Pickup Delay = 8 sec (OCCN)
Track 3 : Dax B Enable = Not Used (OCCN)

GCP: track 3 Dax C
Track 3 : Dax C Warning Time = 33 sec (OCCN)
Track 3 : Dax C Offset Distance = 3094 ft (Field)
Track 3 : Switch MS EZ Level= 0 (OCCN)
Track 3 : Pickup Delay Mode = Auto (OCCN)
Track 3 : Dax C MS/GCP Mode = Pred (OCCN)
Track 3 : Dax C Pickup Delay = 8 sec (OCCN)
Track 3 : Dax C Enable = Not Used (OCCN)

GCP: track 3 pos start
Track 3 : Positive Start = Off (OCCN)
Track 3 : Sudden Shnt Det Used = No (OCCN)
Track 3 : Low EZ Detection Used = No (OCCN)

GCP: track 3 MS Control
Track 3 : MS/GCP CtrlIP Used = No (OCCN)
Track 3 : MS Sensitivity Level= 0 (Field)
Track 3 : Compensation Level= 1300 (Field,TCN)
Track 3 : Warn Time-Ballast Comp = High (Field,TCN)
Track 3 : Low EX Adjustment = 39 (Field)
Track 3 : Bidirn Dax Passthru = No (OCCN)
Track 3 : False Act on Train Stop = No (Field)
Track 3 : EX Limiting Used = Yes (Field)
Track 3 : EZ Correction Used = Yes (Field)

GCP: track 4
Track 4 : GCP Freq Category = Standard (Field)
Track 4 : GCP Frequency = 525 Hz (Field,TCN)
Track 4 : Approach Distance = 1387 ft (Field,TCN)
Track 4 : Uni/Bi/Sim-Bidirni= Unidirni(OCCN,TCN)
Track 4 : GCP Transmit Level= High (Field,TCN)
Track 4 : Island Connection = Isl3(OCCN)
Track 4 : Directionally Wired = No (OCCN)
Track 4 : Island Distance = 0 ft (Field,TCN)
Track 4 : Computed Distance = 9999 ft (Field,TCN)
Track 4 : Linearization Steps = 100 (Field,TCN)

GCP: track 4 enhanced det
Track 4 : Inbound PS Sensitivity = High (Field)
Track 4 : Speed Limiting Used = Yes (Field)
Track 4 : Outbound False Act Lvl= Normal(Field)
Track 4 : Outbound PS Timer = 20 sec (Field)
Track 4 : Trailing Switch Logic = On (Field)
Track 4 : Post Joint Detn Time = 15 sec (OCCN)
Track 4 : Adv Appr Predn = No (OCCN)
Track 4 : Cancel Pickup Delay = This Isl(OCCN)

GCP: track 4 BIDAX RX
Track 4 : BIDAX To RX Appr = Not Used (OCCN)

GCP: track 4 BIDAX TX
Track 4 : BIDAX To TX Appr = Not Used (OCCN)

GCP: track 4 prime
Track 4 : Prime Warning Time = 34 sec (OCCN)
Track 4 : Prime Offset Distance = 0 ft (Field)
Track 4 : Switch MS EZ Level= 20 (OCCN)
Track 4 : Prime MS/GCP Mode = Pred (OCCN)
Track 4 : Prime Pickup Delay = 30 sec (OCCN)
Track 4 : Prime UAX = IP (OCCN)
Track 4 : Prime UAX Pickup = 22 sec (OCCN)

GCP: track 4 pos start
Track 4 : Positive Start = Off (OCCN)
Track 4 : Sudden Shnt Det Used = No (OCCN)
Track 4 : Low EZ Detection Used = No (OCCN)

GCP: track 4 MS Control
Track 4 : MS/GCP CtrlIP Used = No (OCCN)
Track 4 : MS Sensitivity Level= 0 (Field)
Track 4 : Compensation Level= 1300 (Field,TCN)
Track 4 : Warn Time-Ballast Comp = Low (Field,TCN)
Track 4 : Low EX Adjustment = 39 (Field)
Track 4 : Bidirn Dax Passthru = No (OCCN)
Track 4 : False Act on Train Stop = No (Field)
Track 4 : EX Limiting Used = Yes (Field)
Track 4 : EZ Correction Used = Yes (Field)

CONT'D ON
SHEET 04

UNIT #1

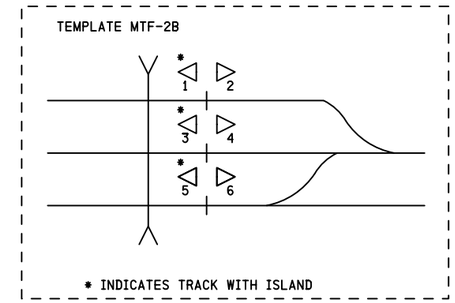

NOTES

1) DISTANCE(S) TO BE VERIFIED AT INSTALLATION
INDICATE SELECTED PROGRAMMED VALUE IF DIFFERENT THAN SHOWN
REFER TO 4000 GCP INSTRUCTION/INSTALLATION MANUAL
FOR PROGRAMMING PARAMETERS

2) PROGRAM TEXT HIGHLIGHTED IN RED INDICATES 4000 PROGRAM
MODIFICATIONS TO DEFAULT PROGRAM VALUES

3) EACH CONSTANT WARNING DEVICE SYSTEM TO BE PROGRAMMED TO
CONVERT TO A MOTION SENSOR 300 FEET FROM EDGE OF ROAD
TRAVELLED WAY
SHUNT TRACK 300 FEET FROM EDGE OF ROAD TRAVELLED WAY
AND NOTE "EZ" VALUE
PROGRAM EACH SYSTEM WITH THE INDICATED "EZ" VALUE +2

4) VERIFY SET TIMER VALUE TO MATCH ACTUAL TRAIN MOVEMENT
WITHIN THE CROSSING APPROACH CIRCUITS

SII 03 JUL 2014

PROPOSED
DESIGN NO. 13-0120
RED-IN YELLOW-OUT

AS INSTALLED
DATE _____
BY _____
(PRINT NAME)

SIEMENS INDUSTRY INC			
DES. : TMF	DATE: 03/07/14	JOB NO. : WCNA10381	
CKD. : MRB	ISSUE DATE: N/A	EST. NO. :GDXP07259	
DRN. : TMF	PLAN NO. :N/A	SHEET 3 OF 41	
P. TIME:11:35	P. DATE: 17-JUN-2015	CAD ID. : CHI-080.65-03	

SIEMENS INDUSTRY INC
LOUISVILLE DIVISION, LOUISVILLE, KY

PROPOSED			REVISIONS	D	C	COMPLETED			C
D	M	Y				D	M	Y	

REGION SOUTHERN
SUB. CHICAGO 340

SIGNALS AND COMMUNICATIONS HOMEWOOD
03 JULY 2014
DES. TMF
CH. MRB

GCP 4000 UNIT #1
PROGRAM INFORMATION
GILMAN, IL
6TH STREET

CHI-080.65-03

DOT#288 985T

chi-080.65-03.dgn
17-JUN-2015

REVISIONS				
NO.	DATE	BY	DESCRIPTION	APP. BY
1				
2				
3				
4				
5				

CONT'D ON
SHEET 03

```
GCP:  track 5
Track 5 : GCP Freq Category = Standard (Field)
Track 5 : GCP Frequency = 525 Hz (Field,TCN)
Track 5 : Approach Distance = 1150 ft (Field,TCN)
Track 5 : Uni/Bi/Sim-Bidirni = Unidirni(OCCN,TCN)
Track 5 : GCP Transmit Level = High (Field,TCN)
Track 5 : Island Connection = Isl 5 (OCCN)
Track 5 : Directionally Wired = No (OCCN)
Track 5 : Island Distance = 165 ft (Field,TCN)
Track 5 : Computed Distance = 9999 ft (Field,TCN)
Track 5 : Linearization Steps = 100   (Field,TCN)

GCP:  track 5 enhanced det
Track 5 : Inbound PS Sensitivity = High (Field)
Track 5 : Speed Limiting Used = Yes (Field)
Track 5 : Outbound False Act Lvl = Normal(Field)
Track 5 : Outbound PS Timer = 20 sec (Field)
Track 5 : Trailing Switch Logic = On (Field)
Track 5 : Post Joint Detn Time = 15 sec (OCCN)
Track 5 : Adv Appr Predn = No (OCCN)
Track 5 : CancelPickup Delay = This Isl(OCCN)

GCP:  track 5 BIDAX RX
Track 5 : BIDAX To RX Appr = Not Used (OCCN)

GCP:  track 5 BIDAX TX
Track 5 : BIDAX To TX Appr = Not Used (OCCN)

GCP:  track 5 prime
Track 5 : Prime Warning Time = 34 sec (OCCN)
Track 5 : Prime Offset Distance = 0 ft (Field)
Track 5 : Switch MS EZ Level = 24   (OCCN)
Track 5 : Prime Pickup Delay = 30 sec (OCCN)
Track 5 : Prime UAX = Not Used (OCCN)

GCP:  track 5 Dax A
Track 5 : Dax A Warning Time = 32 sec (OCCN)
Track 5 : Dax A Offset Distance = 1357 ft (Field)
Track 5 : Switch MS EZ Level = 0   (OCCN)
Track 5 : Pickup Delay Mode = Auto (OCCN)
Track 5 : Dax A MS/GCP Mode = Pred (OCCN)
Track 5 : Dax A Pickup Delay = 8 sec (OCCN)
Track 5 : Dax A Enable = Not Used (OCCN)

GCP:  track 5 pos start
Track 5 : Positive Start = Off (OCCN)
Track 5 : Sudden Shnt Det Used = No (OCCN)
Track 5 : Low EZ Detection Used = No (OCCN)

GCP:  track 5 MS Control
Track 5 : MS/GCP CtrlIP Used = No (OCCN)
Track 5 : MS Sensitivity Level = 0   (Field)
Track 5 : Compensation Level = 1300   (Field,TCN)
Track 5 : Warn Time-Ballast Comp = High (Field,TCN)
Track 5 : Low EX Adjustment = 39   (Field)
Track 5 : Bidirn Dax Passthru = No (OCCN)
Track 5 : False Act on Train Stop = No (Field)
Track 5 : EX Limiting Used = Yes (Field)
Track 5 : EZ Correction Used = Yes (Field)

GCP:  track 6
Track 6 : GCP Freq Category = Standard (Field)
Track 6 : GCP Frequency = 970 Hz (Field,TCN)
Track 6 : Approach Distance = 1150 ft (Field,TCN)
Track 6 : Uni/Bi/Sim-Bidirni = Unidirni(OCCN,TCN)
Track 6 : GCP Transmit Level = High (Field,TCN)
Track 6 : Island Connection = Isl 5 (OCCN)
Track 6 : Directionally Wired = No (OCCN)
Track 6 : Island Distance = 0 ft (Field,TCN)
Track 6 : Computed Distance = 9999 ft (Field,TCN)
Track 6 : Linearization Steps = 100   (Field,TCN)

GCP:  track 6 enhanced det
Track 6 : Inbound PS Sensitivity = High (Field)
Track 6 : Speed Limiting Used = Yes (Field)
Track 6 : Outbound False Act Lvl = Normal(Field)
Track 6 : Outbound PS Timer = 20 sec (Field)
Track 6 : Trailing Switch Logic = On (Field)
Track 6 : Post Joint Detn Time = 15 sec (OCCN)
Track 6 : Adv Appr Predn = No (OCCN)
Track 6 : CancelPickup Delay = This Isl(OCCN)

GCP:  track 6 BIDAX RX
Track 6 : BIDAX To RX Appr = Not Used (OCCN)

GCP:  track 6 BIDAX TX
Track 6 : BIDAX To TX Appr = Not Used (OCCN)

GCP:  track 6 prime
Track 6 : Prime Warning Time = 34 sec (OCCN)
Track 6 : Prime Offset Distance = 0 ft (Field)
Track 6 : Switch MS EZ Level = 24   (OCCN)
Track 6 : Prime MS/GCP Mode = Pred (OCCN)
Track 6 : Prime Pickup Delay = 30 sec (OCCN)
Track 6 : Prime UAX = Not Used (OCCN)

GCP:  track 6 pos start
Track 6 : Positive Start = Off (OCCN)
Track 6 : Sudden Shnt Det Used = No (OCCN)
Track 6 : Low EZ Detection Used = No (OCCN)

GCP:  track 6 MS Control
Track 6 : MS/GCP CtrlIP Used = No (OCCN)
Track 6 : MS Sensitivity Level = 0   (Field)
Track 6 : Compensation Level = 1300   (Field,TCN)
Track 6 : Warn Time-Ballast Comp = Low (Field,TCN)
Track 6 : Low EX Adjustment = 39   (Field)
Track 6 : Bidirn Dax Passthru = No (OCCN)
Track 6 : False Act on Train Stop = No (Field)
Track 6 : EX Limiting Used = Yes (Field)
Track 6 : EZ Correction Used = Yes (Field)

ISLAND:  track 1
Track 1 : IslFrequency = 7.1 kHz (Field)
Track 1 : Pickup Delay (2s +) = 0 sec (OCCN)
Track 1 : IslEnable IP Used = No (OCCN)

ISLAND:  track 3
Track 3 : IslFrequency = 4.9 kHz (Field)
Track 3 : Pickup Delay (2s +) = 0 sec (OCCN)
Track 3 : IslEnable IP Used = No (OCCN)

ISLAND:  track 5
Track 5 : IslFrequency = 4.0 kHz (Field)
Track 5 : Pickup Delay (2s +) = 0 sec (OCCN)
Track 5 : IslEnable IP Used = No (OCCN)

AND:  track Anding
AND 1 XR Used = Yes (OCCN)
AND 2 Used = Yes (OCCN)
AND 3 Used = No (OCCN)
AND 4 Used = No (OCCN)
AND 5 Used = No (OCCN)
AND 6 Used = No (OCCN)
AND 7 Used = No (OCCN)
AND 8 Used = No (OCCN)

AND:  AND 1 XR
AND 1 XR Track 1 = Prime (OCCN)
AND 1 XR Track 2 = Prime (OCCN)
AND 1 XR Track 3 = Prime (OCCN)
AND 1 XR Track 4 = Prime (OCCN)
AND 1 XR Track 5 = Prime (OCCN)
AND 1 XR Track 6 = Prime (OCCN)
AND 1 Enable Used = Yes (OCCN)
And 1 Enable Pickup = 0 sec (OCCN)
AND 1 Enable Drop = 0 sec (OCCN)
AND 1 Wrap Used = No (OCCN)

AND:  AND 2
AND 2 Track 1 = Not Used (OCCN)
AND 2 Track 2 = Not Used (OCCN)
AND 2 Track 3 = Not Used (OCCN)
AND 2 Track 4 = Not Used (OCCN)
AND 2 Track 5 = Not Used (OCCN)
AND 2 Track 6 = Not Used (OCCN)
AND 2 Enable Used = Yes (OCCN)
AND 2 Enable Pickup = 0 sec (OCCN)
AND 2 Enable Drop = 0 sec (OCCN)
AND 2 Wrap Used = No (OCCN)

ADVANCED:  MS restart
MS/GCP Restart Used = No (OCCN)

ADVANCED:  out of service
OOS Control = OOS IPs (OCCN)

ADVANCED:  out of service 2
T1 OOS Control = OOS Input 1 (OCCN)
T2 OOS Control = OOS Input 1 (OCCN)
T3 OOS Control = OOS Input 2 (OCCN)
T4 OOS Control = OOS Input 2 (OCCN)
T5 OOS Control = OOS Input 3 (OCCN)
T6 OOS Control = OOS Input 3 (OCCN)
T1 OOS Controls = GCP and Island (OCCN)
T2 OOS Controls = GCP Only (OCCN)
T3 OOS Controls = GCP and Island (OCCN)
T4 OOS Controls = GCP Only (OCCN)
T5 OOS Controls = GCP and Island (OCCN)
T6 OOS Controls = GCP Only (OCCN)

ADVANCED:  track wrap circuits
Wrap LOS Timer = 5 sec (OCCN)
Track 1 Wrap Used = No (OCCN)
Track 2 Wrap Used = No (OCCN)
Track 3 Wrap Used = No (OCCN)
Track 4 Wrap Used = No (OCCN)
Track 5 Wrap Used = No (OCCN)
Track 6 Wrap Used = No (OCCN)

ADVANCED:  trk 1 overrides
Track 1 : AllPredictors Override Used = No (OCCN)
Track 1 : Dax A Override Used = No (OCCN)

ADVANCED:  trk 2 overrides
Track 2 : AllPredictors Override Used = No (OCCN)

ADVANCED:  trk 3 overrides
Track 3 : AllPredictors Override Used = No (OCCN)
Track 3 : Dax A Override Used = No (OCCN)
Track 3 : Dax B Override Used = No (OCCN)
Track 3 : Dax C Override Used = No (OCCN)

ADVANCED:  trk 4 overrides
Track 4 : AllPredictors Override Used = No (OCCN)

ADVANCED:  trk 5 overrides
Track 5 : AllPredictors Override Used = No (OCCN)
Track 5 : Dax A Override Used = No (OCCN)

ADVANCED:  trk 6 overrides
Track 6 : AllPredictors Override Used = No (OCCN)

ADVANCED:  OR logic
OR 1 Used = No (OCCN)
OR 2 Used = No (OCCN)
OR 3 Used = No (OCCN)
OR 4 Used = No (OCCN)

ADVANCED:  InternalI/O 1
Pass Thrus = Yes (OCCN)
Int.1 Sets = AND 2 Enable (OCCN)
Int.1 Set by = Passthru State 1 (OCCN)
Int.2 Sets = AND 2 Enable (OCCN)
Int.2 Set by = Passthru State 2 (OCCN)
Int.3 Sets = GD 1.1 (OCCN)
Int.3 Set by = Passthru State 1 (OCCN)
Int.4 Sets = GD 2.1 (OCCN)
Int.4 Set by = Passthru State 2 (OCCN)

ADVANCED:  InternalI/O 2
Int.5 Sets = Not Used (OCCN)
Int.5 Set by = Not Used (OCCN)
Int.6 Sets = Not Used (OCCN)
Int.6 Set by = Not Used (OCCN)
Int.7 Sets = Not Used (OCCN)
Int.7 Set by = Not Used (OCCN)
Int.8 Sets = Not Used (OCCN)
Int.8 Set by = Not Used (OCCN)

ADVANCED:  InternalI/O 3
Int.9 Sets = Not Used (OCCN)
Int.9 Set by = Not Used (OCCN)
Int.10 Sets = Not Used (OCCN)
Int.10 Set by = Not Used (OCCN)
Int.11 Sets = Not Used (OCCN)
Int.11 Set by = Not Used (OCCN)
Int.12 Sets = Not Used (OCCN)
Int.12 Set by = Not Used (OCCN)

ADVANCED:  InternalI/O 4
Int.13 Sets = Not Used (OCCN)
Int.13 Set by = Not Used (OCCN)
Int.14 Sets = Not Used (OCCN)
Int.14 Set by = Not Used (OCCN)
Int.15 Sets = Not Used (OCCN)
Int.15 Set by = Not Used (OCCN)
Int.16 Sets = Not Used (OCCN)
Int.16 Set by = Not Used (OCCN)

ADVANCED:  site options
Daylight Savings = On (Field)
Units = Standard (OCCN)
Maint CallRpt IP Used = No (OCCN)
Emergency Activate IP = No (OCCN)
EZ/EX Logging = Change (Field)
EZ/EX Point Change = 3   (Field)

SSCC
Gates Used = Yes (OCCN)
SSCCI+2 GPs Coupled = Yes (OCCN)
Min Activation = 24 sec (OCCN)
Rmt Activation Cancel = 3 min (OCCN)
BellOn Gate Rising = No (OCCN)
Mute BellOn Gate Down = No (OCCN)
SSCCIV Controller Used = No (OCCN)

SSCC:  1
SSCC-1 Activation = AND 1 XR (OCCN)
SSCC-1 Gate Delay = 4 sec (OCCN)
SSCC-1 Number of GPs = 1 (OCCN)
SSCC-1 Number of GDs = 1 (OCCN)
SSCC 1 : Flash Rate = 55 (OCCN)
SSCC 1 : Low Battery Detection = No (Field)
SSCC 1 : Flash Sync = master (OCCN)
SSCC 1 : Invert Gate Output = No (OCCN)
SSCC 1 : Lamp NeutralTest = Off (Field)
Aux-1 Xng CtrlUsed = No (OCCN)

SSCC:  2
SSCC-2 Activation = AND 1 XR (OCCN)
SSCC-2 Gate Delay = 4 sec (OCCN)
SSCC-2 Number of GPs = 0 (OCCN)
SSCC-2 Number of GDs = 1 (OCCN)
SSCC 2 : Flash Rate = 55 (OCCN)
SSCC 2 : Low Battery Detection = No (Field)
SSCC 2 : Flash Sync = slave (OCCN)
SSCC 2 : Invert Gate Output = No (OCCN)
SSCC 2 : Lamp NeutralTest = Off (Field)
Aux-2 Xng CtrlUsed = No (OCCN)

OUTPUT:  assignment page 1
OUT 1.1 = T1 Dax A (OCCN)
OUT 1.2 = T3 Dax C (OCCN)
OUT 2.1 = AND 1 XR (OCCN)
OUT 2.2 = AND 2 (OCCN)
OUT 3.1 = T3 Dax A (OCCN)
OUT 3.2 = T3 Dax B (OCCN)

OUTPUT:  assignment page 2
OUT 4.1 = Not Used (OCCN)
OUT 4.2 = Not Used (OCCN)
OUT 5.1 = T5 Dax A (OCCN)
OUT 5.2 = Not Used (OCCN)
OUT 6.1 = Not Used (OCCN)
OUT 6.2 = Not Used (OCCN)

INPUT:  assignment page 1
IN 1.1 = Not Used (OCCN)
IN 1.2 = Not Used (OCCN)
IN 2.1 = Not Used (OCCN)
IN 2.2 = Not Used (OCCN)
IN 3.1 = Not Used (OCCN)
IN 3.2 = Not Used (OCCN)

INPUT:  assignment page 2
IN 4.1 = T4 Prime UAX (OCCN)
IN 4.2 = Not Used (OCCN)
IN 5.1 = Not Used (OCCN)
IN 5.2 = Not Used (OCCN)
IN 6.1 = Not Used (OCCN)
IN 6.2 = Not Used (OCCN)

IO:  assignment SSCC
OUT GC 1 = Gate Output 1 (OCCN)
OUT GC 2 = Gate Output 2 (OCCN)
IN 7.1 = AND 1 XR Enable (OCCN)
IN 7.2 = Out Of Service IP 3 (OCCN)
IN 7.3 = Not Used (OCCN)
IN 7.4 = Passthru State 1 (OCCN)
IN 7.5 = GP 1.1 (OCCN)
IN 8.1 = Out Of Service IP 1 (OCCN)
IN 8.2 = Out Of Service IP 2 (OCCN)
IN 8.3 = Not Used (OCCN)
IN 8.4 = Passthru State 2 (OCCN)
IN 8.5 = Not Used (OCCN)

SEAR
SEAR Subnode = 99   (OCCN)
DI 1 = General1 (OCCN)
DI 2 = Gnd Flt Tester 1 (OCCN)
Rly 1 = Ground Fault Test (OCCN)
Rly 2 = AC Control(OCCN)

SEAR:  Inputs
SP 2.1 = POK 1 (OCCN)
SP 3.1 = Not Used (OCCN)
SP 4.1 = Not Used (OCCN)
SP 5.1 = Not Used (OCCN)
SP 6.1 = Not Used (OCCN)

SEAR:  slot 1-4 Inputs
IN 1.1 = Not Used (OCCN)
IN 1.2 = Not Used (OCCN)
IN 2.1 = Not Used (OCCN)
IN 2.2 = POK 2 (OCCN)
IN 3.1 = Not Used (OCCN)
IN 3.2 = Not Used (OCCN)
IN 4.2 = Not Used (OCCN)

SEAR:  Inputs slot 5
IN 5.1 = Not Used (OCCN)
IN 5.2 = Not Used (OCCN)

SEAR:  Inputs slot 6
IN 6.1 = Not Used (OCCN)
IN 6.2 = Not Used (OCCN)

SEAR:  slot 7-8 Inputs
IN 7.3 = TSS 1 (OCCN)
IN 8.3 = TSS 2 (OCCN)
IN 8.5 = General2 (OCCN)

SITE:  programming
Radio Subnode = 1   (Field)
Field Password = Off (OCCN)
Low Battery Enabled = Off (Field)

Configuration Package File
--------------------------
Filename: chi-080.65-unit#1.pac
```

UNIT #1

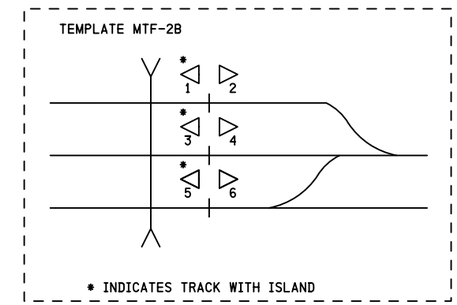

NOTES

1) DISTANCE(S) TO BE VERIFIED AT INSTALLATION
   INDICATE SELECTED PROGRAMMED VALUE IF DIFFERENT THAN SHOWN
   REFER TO 4000 GCP INSTRUCTION/INSTALLATION MANUAL
   FOR PROGRAMMING PARAMETERS

2) PROGRAM TEXT HIGHLIGHTED IN RED INDICATES 4000 PROGRAM
   MODIFICATIONS TO DEFAULT PROGRAM VALUES

3) EACH CONSTANT WARNING DEVICE SYSTEM TO BE PROGRAMMED TO
   CONVERT TO A MOTION SENSOR 300 FEET FROM EDGE OF ROAD
   TRAVELLED WAY
   SHUNT TRACK 300 FEET FROM EDGE OF ROAD TRAVELLED WAY
   AND NOTE "EZ" VALUE
   PROGRAM EACH SYSTEM WITH THE INDICATED "EZ" VALUE +2

4) VERIFY SET TIMER VALUE TO MATCH ACTUAL TRAIN MOVEMENT
   WITHIN THE CROSSING APPROACH CIRCUITS

SII 03 JUL 2014

PROPOSED
DESIGN NO. 13-0120
RED-IN YELLOW-OUT

AS INSTALLED
DATE _____
BY _____
(PRINT NAME)

PROPOSED			REVISIONS	D	C	COMPLETED			C
D	M	Y				D	M	Y	

REGION SOUTHERN
SUB. CHICAGO 340

SIGNALS AND COMMUNICATIONS HOMEWOOD
03 JULY 2014
DES. TMF
CH. MRB

GCP 4000 UNIT #1
PROGRAM INFORMATION
GILMAN, IL
6TH STREET

CHI-080.65-04

DOT#288 985T

chi-080.65-04.dgn
17-JUN-2015

SIEMENS INDUSTRY INC			
DES. : TMF	DATE: 03/07/14	JOB NO. : WCNA10381	
CKD. : MRB	ISSUE DATE: N/A	EST. NO. :GDXP07259	
DRN. : TMF	PLAN NO. :N/A	SHEET 4 OF 41	
P. TIME:11:35	P. DATE: 17-JUN-2015	CAD ID. : CHI-080.65-04	

SIEMENS INDUSTRY INC
LOUISVILLE DIVISION, LOUISVILLE, KY

REVISIONS				
NO.	DATE	BY	DESCRIPTION	APP. BY
1				
2				
3				
4				
5				

TO CONFIGURE SEARII & SEARIII PRESS SITE SETUP KEY. USE ARROW KEYS TO MAKE SELECTION, PRESS ENTER AFTER SELECTION HAS BEEN MADE.

STAGE 1

PROGRAM MENU QUESTIONS	PROGRAM	OPTIONS/RANGE
DATE/TIME?	CURRENT DATE/TIME	CURRENT DATE/TIME
AUTOMATIC DST ADJUSTMENT?	YES	YES, NO
TIME ZONE?	CENTRAL	EASTERN, CENTRAL, MOUNTAIN, PACIFIC, ALASKA, HAWAII, ATLANTIC, SASKATCHEWAN, NEW FOUNLAND
SITE NAME?	6TH STREET	STREET NAME
MILE POST?	080.65	MILEAGE
DOT/CROSSING IS #?	288 985T	123456A
TESTER TYPE?	CROSSING	CROSSING, WAYSIDE
DATE FORMAT?	dd-mm-yyyy	mm-dd-yyyy, dd-mm-yyyy
TEMPERATURE FORMAT?	FAHRENHEIT	FAHRENHEIT, CELSIUS
INDICATE HOLD?	0	SECONDS
SITE TYPE?		NO COM, BULLHORN, DIALUP, NODE, COLLECTOR
SITE ATCS ADDRESS?		7.RRR.LLL.GGG.99.01
OFFICE ATCS ADDRESS?		2.RRR.NN.DDDD
PRIMARY HOP ADDR? (FOR NODE USE)		7.RRR.LLL.GGG.00.01
BACKUP HOP ADDR1? (FOR NODE USE)		7.RRR.LLL.GGG.00.01
BACKUP HOP ADDR2? (FOR NODE USE)		7.RRR.LLL.GGG.00.01
POLL ID? (FOR COLLECTOR USE)		1-99
MODE? (FOR COLLECTOR USE)		GEN/ATCS, GENISYS
WAMS/XID? (FOR COLLECTOR USE)		ENABLED, DISABLE
OFFICE COMM. DEVICE? (FOR COLLECTOR USE)		DIRECT (RS232) MCM (RS232) MCM (ECHELON) SREAD SPEC (ECHELON) DIAL MODEM (RS232) S200 RADIO (RS422)
OFFICE PHONE NUMBER? (FOR COLLECTOR USE)		PHONE NUMBER OF WAMS
INIT STRING? (FOR COLLECTOR USE)		OPTIONAL HAYES MODEM INITIALIZATION STRING
FIELD COMM. DEVICE?		VHF COMM. (ECHELON) VHF COMM. (RS232) SPREAD SPEC (ECHELON) SPREAD SPEC (RS232)
USER PORT?	57600, 8, N, 1, N	BAUD, DATA BITS, PARITY, STOP BITS, FLOW CONTROL
AUX PORT?	9600, 8, N, 1, N	BAUD, DATA BITS, PARITY, STOP BITS, FLOW CONTROL

YOU WILL NOW SEE A MESSAGE "PLEASE WAIT COMPILING STAGE 1" CONTINUE TO NEXT PROGRAM MENU QUESTIONS.

NOTES:

1) ASSIGNED DTMF CODES:

ACTIVATE CROSSING (E. SIDING TRACK - 1T1)	98511#
DE-ACTIVATE CROSSING (E. SIDING TRACK - 1T1)	98510#
ACTIVATE CROSSING (MAIN TRACK - 1T3)	98531#
DE-ACTIVATE CROSSING (MAIN TRACK - 1T3)	98530#
ACTIVATE CROSSING (W. SIDING TRACK - 1T5)	98541#
DE-ACTIVATE CROSSING (W. SIDING TRACK - 1T5)	98540#
ACTIVATE CROSSING (MAINTENANCE)	98571#
DE-ACTIVATE CROSSING (MAINTENANCE)	98570#

2) ADDITIONAL OPTIONS: DUAL CROSSING, EXTERNAL ENTRANCE GATE CONTROLLERS.

STAGE 2

QUESTION	PROGRAM	SELECTION 1 (MINIMUM)	SELECTION 2 (MAXIMUM)	CONDITION FOR MENU DISPLAY
RESET NAMES / MODULES ?	NO	YES	NO	ALWAYS
CROSSING CONFIGURATION ?	NORMAL	NORMAL	SPLIT GATE (NOTE 2)	ALWAYS
AND1 USED AS XR?	YES	NO	YES	ALWAYS
AND2 USED AS XR?	NO	NO	YES	ALWAYS
AND3 USED AS XR?	NO	NO	YES	ALWAYS
AND4 USED AS XR?	NO	NO	YES	ALWAYS
AND5 USED AS XR?	NO	NO	YES	ALWAYS
AND6 USED AS XR?	NO	NO	YES	ALWAYS
AND7 USED AS XR?	NO	NO	YES	ALWAYS
AND8 USED AS XR?	NO	NO	YES	ALWAYS
XR CONTROLLED BY FOREIGN RR?	NO	AND1	AND8	CROSSING CONFIGURATION = SPIT GATE
ENTRANCE GATES ?	2	0	8	ALWAYS
GATE CONTROLLED BY FOREIGN RR?	NONE	NONE	TSS4	CROSSING CONFIGURATION = SPIT GATE
GATE DESCENT TIME (SECONDS)	11	7	20	GATES > 0
GATE POSITION FAIL TIME (SECONDS) ?	17	10	60	GATES > 0
BATTERY BANKS ?	3	1	3	ALWAYS
BATT MON USED ?	YES	NO	YES	ALWAYS
INTERNAL CROSSING CONTROLLERS ?	2	0	2	ALWAYS
EXTERNAL CROSSING CONTROLLERS ?	0	0	2	CROSSING CONTROLLER = YES
ALLOW DTMF CONTROL ?	YES	NO	YES	ALWAYS
COUNTRY	US	CANADA	US	ALLOW DTMF CONTROL = YES
DTMF CONTROL WITH PREMPTION ?	NO	NO	YES	ALLOW DTMF CONTROL = YES
POK ANNOUNCEMENT TO VHF ?	NO	NO	YES	ALLOW DTMF CONTROL = YES
VHF VOICE CHANNEL ?	1	1	8	ALLOW DTMF CONTROL = YES
VHF DATA CHANNEL ?	1	1	8	ALLOW DTMF CONTROL = YES
DIGIT #1 ?	9	0	9	ALLOW DTMF CONTROL = YES
DIGIT #2 ?	8	0	9	ALLOW DTMF CONTROL = YES
DIGIT #3 ?	5	0	9	ALLOW DTMF CONTROL = YES
DIGIT #4 ?	N/A	0	9	ALLOW DTMF CONTROL = YES
DIGIT #5 ?	N/A	0	9	ALLOW DTMF CONTROL = YES
TIME-OUT FOR DTMF REQUEST #1 ?	180	0	240	ALLOW DTMF CONTROL = YES
TIME-OUT FOR DTMF REQUEST #2 ?	0	0	240	ALLOW DTMF CONTROL = YES
TIME-OUT FOR DTMF REQUEST #3 ?	180	0	240	ALLOW DTMF CONTROL = YES
TIME-OUT FOR DTMF REQUEST #4 ?	0	0	240	ALLOW DTMF CONTROL = YES

STAGE 2 CONT'D

QUESTION	PROGRAM	SELECTION 1 (MINIMUM)	SELECTION 2 (MAXIMUM)	CONDITION FOR MENU DISPLAY
TIME-OUT FOR DTMF REQUEST #5 ?	180	0	240	ALLOW DTMF CONTROL = YES
TIME-OUT FOR DTMF REQUEST #6 ?	0	0	240	ALLOW DTMF CONTROL = YES
TIME-OUT FOR DTMF REQUEST #7 ?	180	0	240	ALLOW DTMF CONTROL = YES
ISLAND RELEASE DTMF REQUEST #1 ?	1	0	6	TIME-OUT FOR DTMF REQUEST #1 > 0
ISLAND RELEASE DTMF REQUEST #2 ?	0	0	6	TIME-OUT FOR DTMF REQUEST #2 > 0
ISLAND RELEASE DTMF REQUEST #3 ?	3	0	6	TIME-OUT FOR DTMF REQUEST #3 > 0
ISLAND RELEASE DTMF REQUEST #4 ?	0	0	6	TIME-OUT FOR DTMF REQUEST #4 > 0
ISLAND RELEASE DTMF REQUEST #5 ?	5	0	6	TIME-OUT FOR DTMF REQUEST #5 > 0
ISLAND RELEASE DTMF REQUEST #6 ?	0	0	6	TIME-OUT FOR DTMF REQUEST #6 > 0
ISLAND RELEASE DTMF REQUEST #7 ?	0	0	6	TIME-OUT FOR DTMF REQUEST #7 > 0
ILOD MODULES ?	2	0	4	ALWAYS
ANY LED BULBS USED ?	YES	NO	YES	ILOD MODULES > 0
AUTO INSPECTION ?	NO	YES	NO	ALWAYS
BELL SENSORS ?	1	0	8	ALWAYS
BELL SENSORS TSS1 ?	YES	NO	YES	BELL SENSORS > 0
BELL SENSORS TSS2 ?	N/A	NO	YES	BELL SENSORS > 0
BELL SENSORS TSS3 ?	N/A	NO	YES	BELL SENSORS > 0
BELL SENSORS TSS4 ?	N/A	NO	YES	BELL SENSORS > 0
BELL SENSORS TSS5 ?	N/A	NO	YES	BELL SENSORS > 0
BELL SENSORS TSS6 ?	N/A	NO	YES	BELL SENSORS > 0
BELL SENSORS TSS7 ?	N/A	NO	YES	BELL SENSORS > 0
BELL SENSORS TSS8 ?	N/A	NO	YES	BELL SENSORS > 0
BELL ON ?	GATES LOWERING	GATES LOWERING		BELL SENSORS > 0
		GATES MOVING		
		ALWAYS		
BATTERY PERCENT FOR ALARM ?	85	0	100	ALWAYS
GFT'S ?	YES	YES	NO	ALWAYS
BATTERIES ON GFT1 ?	2	1	2	GFT'S = YES
GATE UP SOURCE ?	GP	TSS	GP	GATE > 0
GATE DOWN SOURCE ?	GD	TIP , TSS	GD	GATES > 0
USE CELL MODEM NON-CRITICAL FEATURE ?	NO	NO	YES	ALWAYS
FULL APPROACH MOVE ALARMS ?	ACTIVATE	ACTIVATE		ALWAYS
		DO NOT ACTIVATE		

YOU WILL NOW SEE A MESSAGE "PLEASE WAIT COMPILING STAGE 2" CONTINUE TO NEXT PROGRAM MENU QUESTIONS.

STAGE 3

PROGRAM MENU QUESTIONS	
EDIT DIGITAL INPUTS	NO
EDIT BATTERIES	NO
EDIT RELAYS	NO
EDIT TEST LEDS	NO
EDIT ILOD SENSORS	NO
EDIT VHF SETTINGS	NO
GCP4K ATCS SUBNODE?	16

SAVE CONFIGURATION

chi-080.65-05.dgn
17-JUN-2015

UNIT #1

SII 03 JUL 2014

PROPOSED
DESIGN NO. 13-0120
RED-IN YELLOW-OUT

AS INSTALLED
DATE _____
BY _____
(PRINT NAME)

SEARIII EXECUTIVE 9V725 REV. A01U, SEARIII APPLICATION 9VC45 REV. A01A

PROPOSED D	PROPOSED M	PROPOSED Y	REVISIONS	D	C	COMPLETED D	COMPLETED M	COMPLETED Y	C

REGION SOUTHERN
SUB. CHICAGO 340

SIGNALS AND COMMUNICATIONS HOMEWOOD
03 JULY 2014
DES. TMF
CH. MRB

GCP 4000 UNIT #1/SEAR III
SETUP & PROGRAM
GILMAN, IL
6TH STREET

CHI-080.65-05

DOT#288 985T

SIEMENS INDUSTRY INC

DES.: TMF	DATE: 03/07/14	JOB NO.: WCNA10381	
CKD.: MRB	ISSUE DATE: N/A	EST. NO.: QDXP07259	
DRN.: TMF	PLAN NO.: N/A	SHEET 5 OF 41	
P TIME: 11:35	P DATE: 17-JUN-2015	CAD ID.: CHI-080.65-05	

SIEMENS INDUSTRY INC
LOUISVILLE DIVISION, LOUISVILLE, KY

REVISIONS			
NO.	DATE	BY	DESCRIPTION	APP. BY
1				
2				
3				
4				
5				

UNIT #1

GCP 4000
CALIBRATION HISTORY

INITIAL SET UP BY: _____ DATE: _____

		APPROACH DISTANCE CALIBRATION										LINEARIZATION CALIBRATION	
		EZ/EX VALUES (TRACK UNOCCUPIED)				HARD WIRE SHUNT AT TERMINATION SHUNT				COMPUTED APPROACH DISTANCE		LINEARIZATION STEP VALUE	
		EZ		EX		EZ		EX					
		NRML	STBY	NRML	STBY	NRML	STBY	NRML	STBY	NRML	STBY	NRML	STBY
NORTH	TRACK 1												
SOUTH	TRACK 1	N/A	N/A	N/A	N/A	N/A	N/A	N/A	N/A	N/A	N/A	N/A	N/A
NORTH	TRACK 2	N/A	N/A	N/A	N/A	N/A	N/A	N/A	N/A	N/A	N/A	N/A	N/A
SOUTH	TRACK 2												
NORTH	TRACK 3												
SOUTH	TRACK 3	N/A	N/A	N/A	N/A	N/A	N/A	N/A	N/A	N/A	N/A	N/A	N/A
NORTH	TRACK 4	N/A	N/A	N/A	N/A	N/A	N/A	N/A	N/A	N/A	N/A	N/A	N/A
SOUTH	TRACK 4												
NORTH	TRACK 5												
SOUTH	TRACK 5	N/A	N/A	N/A	N/A	N/A	N/A	N/A	N/A	N/A	N/A	N/A	N/A
NORTH	TRACK 6	N/A	N/A	N/A	N/A	N/A	N/A	N/A	N/A	N/A	N/A	N/A	N/A
SOUTH	TRACK 6												

GCP 4000
CALIBRATION HISTORY

INITIAL SET UP BY: _____ DATE: _____

		APPROACH DISTANCE CALIBRATION										LINEARIZATION CALIBRATION	
		EZ/EX VALUES (TRACK UNOCCUPIED)				HARD WIRE SHUNT AT TERMINATION SHUNT				COMPUTED APPROACH DISTANCE		LINEARIZATION STEP VALUE	
		EZ		EX		EZ		EX					
		NRML	STBY	NRML	STBY	NRML	STBY	NRML	STBY	NRML	STBY	NRML	STBY
NORTH	TRACK 1												
SOUTH	TRACK 1	N/A	N/A	N/A	N/A	N/A	N/A	N/A	N/A	N/A	N/A	N/A	N/A
NORTH	TRACK 2	N/A	N/A	N/A	N/A	N/A	N/A	N/A	N/A	N/A	N/A	N/A	N/A
SOUTH	TRACK 2												
NORTH	TRACK 3												
SOUTH	TRACK 3	N/A	N/A	N/A	N/A	N/A	N/A	N/A	N/A	N/A	N/A	N/A	N/A
NORTH	TRACK 4	N/A	N/A	N/A	N/A	N/A	N/A	N/A	N/A	N/A	N/A	N/A	N/A
SOUTH	TRACK 4												
NORTH	TRACK 5												
SOUTH	TRACK 5	N/A	N/A	N/A	N/A	N/A	N/A	N/A	N/A	N/A	N/A	N/A	N/A
NORTH	TRACK 6	N/A	N/A	N/A	N/A	N/A	N/A	N/A	N/A	N/A	N/A	N/A	N/A
SOUTH	TRACK 6												

GCP 4000
CALIBRATION HISTORY

INITIAL SET UP BY: _____ DATE: _____

		APPROACH DISTANCE CALIBRATION										LINEARIZATION CALIBRATION	
		EZ/EX VALUES (TRACK UNOCCUPIED)				HARD WIRE SHUNT AT TERMINATION SHUNT				COMPUTED APPROACH DISTANCE		LINEARIZATION STEP VALUE	
		EZ		EX		EZ		EX					
		NRML	STBY	NRML	STBY	NRML	STBY	NRML	STBY	NRML	STBY	NRML	STBY
NORTH	TRACK 1												
SOUTH	TRACK 1	N/A	N/A	N/A	N/A	N/A	N/A	N/A	N/A	N/A	N/A	N/A	N/A
NORTH	TRACK 2	N/A	N/A	N/A	N/A	N/A	N/A	N/A	N/A	N/A	N/A	N/A	N/A
SOUTH	TRACK 2												
NORTH	TRACK 3												
SOUTH	TRACK 3	N/A	N/A	N/A	N/A	N/A	N/A	N/A	N/A	N/A	N/A	N/A	N/A
NORTH	TRACK 4	N/A	N/A	N/A	N/A	N/A	N/A	N/A	N/A	N/A	N/A	N/A	N/A
SOUTH	TRACK 4												
NORTH	TRACK 5												
SOUTH	TRACK 5	N/A	N/A	N/A	N/A	N/A	N/A	N/A	N/A	N/A	N/A	N/A	N/A
NORTH	TRACK 6	N/A	N/A	N/A	N/A	N/A	N/A	N/A	N/A	N/A	N/A	N/A	N/A
SOUTH	TRACK 6												

chi-080.65-06.dgn
17-JUN-2015

SII 03 JUL 2014

PROPOSED
DESIGN NO. 13-0120
RED-IN YELLOW-OUT

AS INSTALLED
DATE _____
BY _____
(PRINT NAME)

PROPOSED			REVISIONS	D	C	COMPLETED			C
D	M	Y				D	M	Y	

REGION SOUTHERN
SUB. CHICAGO 340

SIGNALS AND COMMUNICATIONS HOMEWOOD
03 JULY 2014
DES. TMF
CH. MRB

GCP 4000 UNIT #1
CALIBRATION HISTORY
GILMAN, IL
6TH STREET

CHI-080.65-06

DOT#288 985T

SIEMENS INDUSTRY INC

DES.: TMF	DATE: 03/07/14	JOB NO.: WCNA10381	
CKD.: MRB	ISSUE DATE: N/A	EST. NO.: QDXP07259	
DRN.: TMF	PLAN NO.: N/A	SHEET 6 OF 41	
P TIME: 11:36	P DATE: 17-JUN-2015	CAD ID.: CHI-080.65-06	

SIEMENS INDUSTRY INC
LOUISVILLE DIVISION, LOUISVILLE, KY

REVISIONS				
NO.	DATE	BY	DESCRIPTION	APP. BY
1				
2				
3				
4				
5				

chi-080.65-07.dgn
17-JUN-2015

UNIT #1

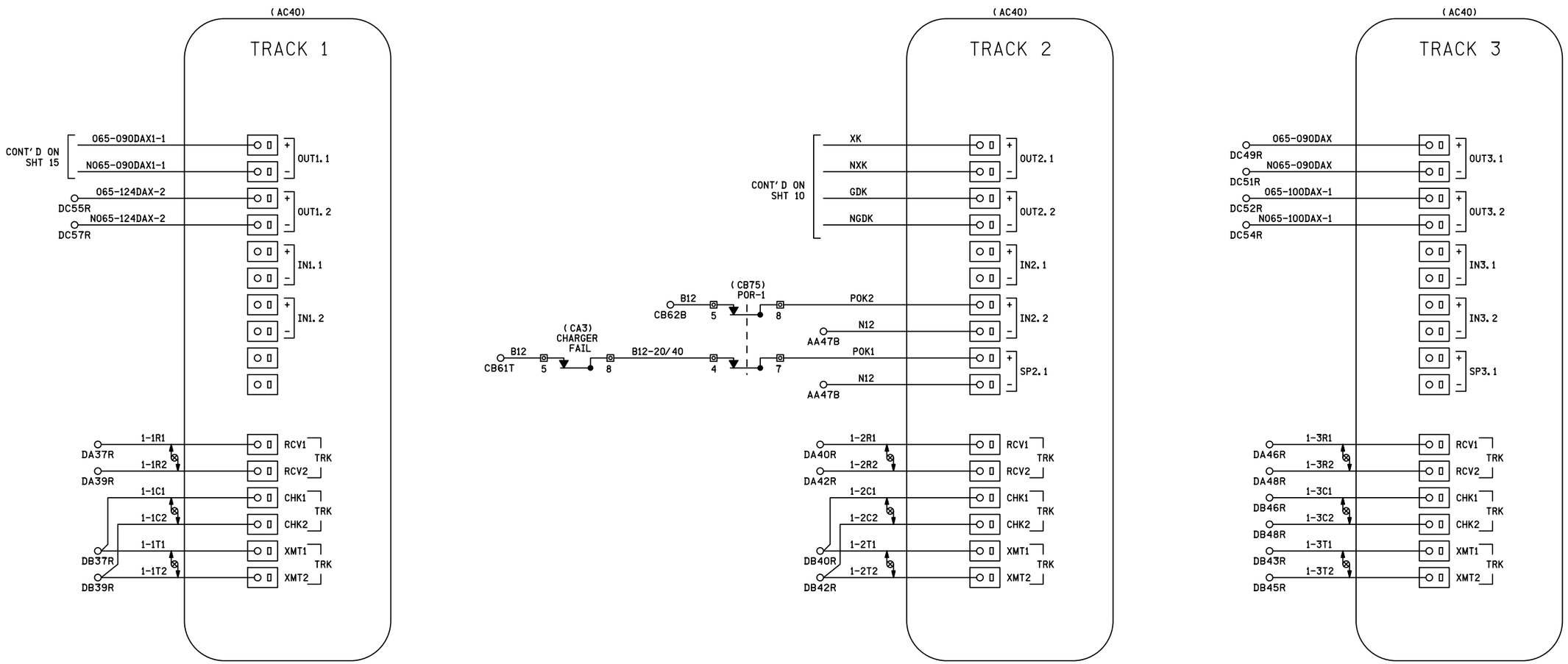

NOTES
1) ALL WIRING #16 AWG UNLESS OTHERWISE NOTED

DENOTES TWISTED PAIR

SII 03 JUL 2014

PROPOSED
DESIGN NO. 13-0120
RED-IN YELLOW-OUT

AS INSTALLED
DATE _____
BY _____
(PRINT NAME)

PROPOSED D	M	Y	REVISIONS	D	C	COMPLETED D	M	Y	C

REGION SOUTHERN
SUB. CHICAGO 340

SIGNALS AND COMMUNICATIONS HOMEWOOD
03 JULY 2014
DES. TMF
CH. MRB

GCP 4000 UNIT #1
TRACK 1, 2 & 3 MODULE CONNECTIONS
GILMAN, IL
6TH STREET

CHI-080.65-07

DOT#288 985T

SIEMENS INDUSTRY INC			
DES. : TMF	DATE: 03/07/14	JOB NO. : WCNA10381	
CKD. : MRB	ISSUE DATE: N/A	EST. NO. : GDXP072S9	
DRN. : TMF	PLAN NO. : N/A	SHEET 7 OF 41	
P TIME: 11:36	P DATE: 17-JUN-2015	CAD ID. : CHI-080.65-07	

SIEMENS INDUSTRY INC
LOUISVILLE DIVISION, LOUISVILLE, KY

REVISIONS				
NO.	DATE	BY	DESCRIPTION	APP. BY
1				
2				
3				
4				
5				

chi-080.65-08.dgn
17-JUN-2015

UNIT #1

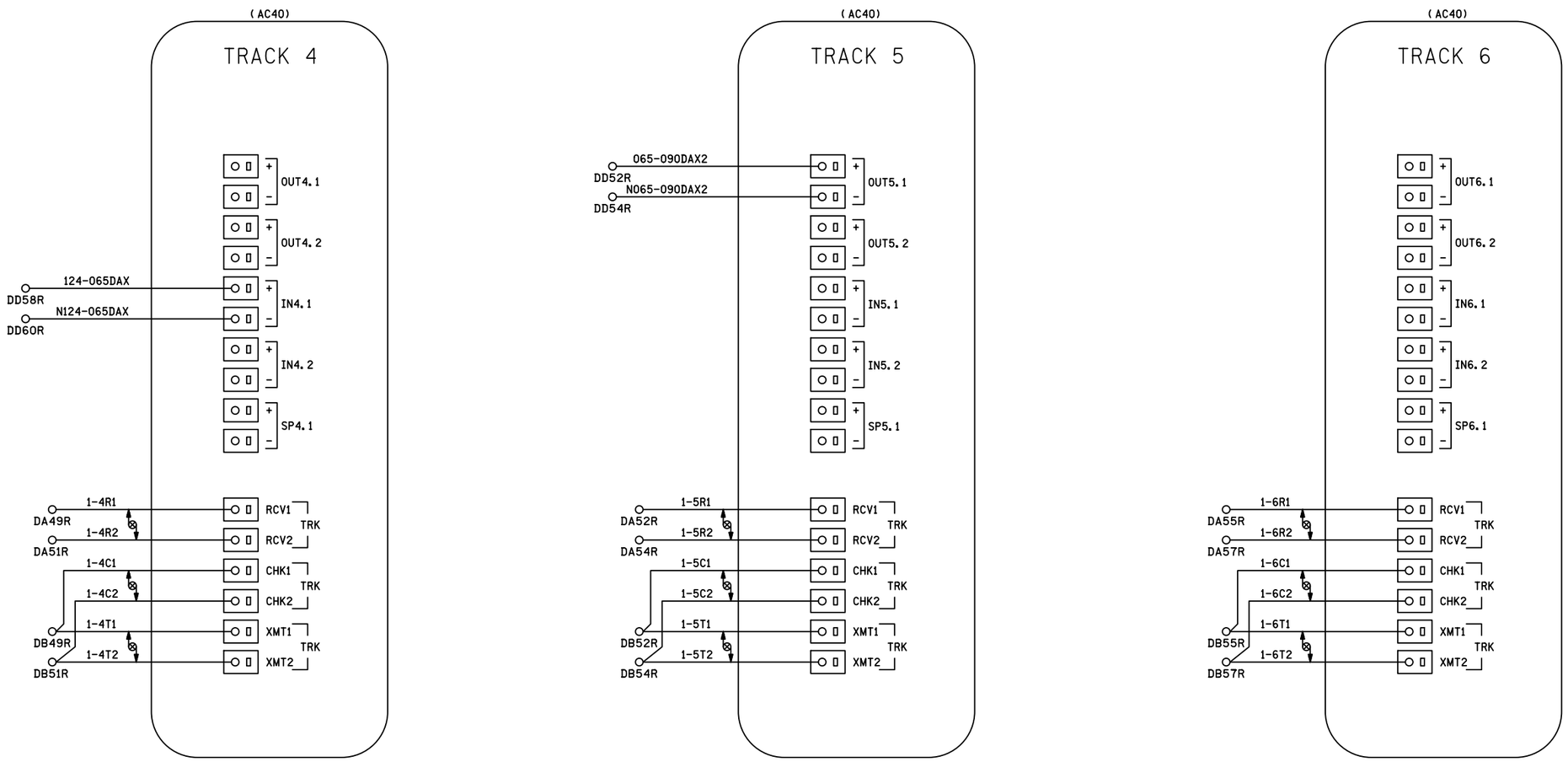

NOTES
1) ALL WIRING #16 AWG UNLESS OTHERWISE NOTED

DENOTES TWISTED PAIR

SII 03 JUL 2014

PROPOSED
DESIGN NO. 13-0120
RED-IN YELLOW-OUT

AS INSTALLED
DATE _____
BY _____
(PRINT NAME)

PROPOSED			REVISIONS	D	C	COMPLETED			C
D	M	Y				D	M	Y	

REGION SOUTHERN
SUB. CHICAGO 340

SIGNALS AND COMMUNICATIONS HOMEWOOD
03 JULY 2014
DES. TMF
CH. MRB

GCP 4000 UNIT #1
TRACK 4,5 & 6 MODULE CONNECTIONS
GILMAN, IL
6TH STREET

CHI-080.65-08

DOT#288 985T

SIEMENS INDUSTRY INC

DES.: TMF	DATE: 03/07/14	JOB NO.: WCNA10381	
CKD.: MRB	ISSUE DATE: N/A	EST. NO.: 10DXP07259	
DRN.: TMF	PLAN NO.: N/A	SHEET 8 OF 41	
P TIME: 11:36	P DATE: 17-JUN-2015	CAD ID.: CHI-080.65-08	

SIEMENS INDUSTRY INC
LOUISVILLE DIVISION, LOUISVILLE, KY

REVISIONS				
NO.	DATE	BY	DESCRIPTION	APP. BY
1				
2				
3				
4				
5				

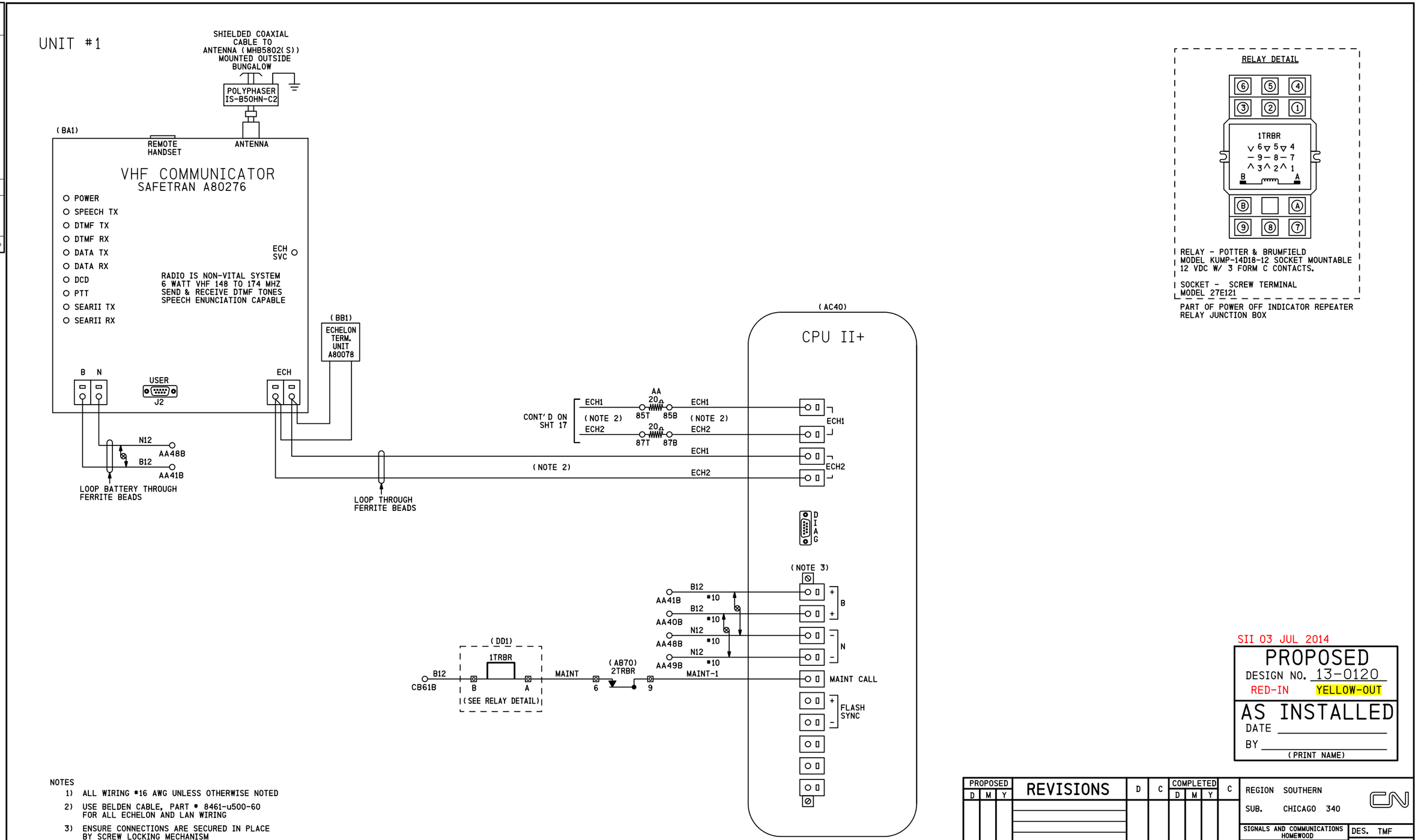

NOTES

1) ALL WIRING #16 AWG UNLESS OTHERWISE NOTED
2) USE BELDEN CABLE, PART # 8461-u500-60 FOR ALL ECHELON AND LAN WIRING
3) ENSURE CONNECTIONS ARE SECURED IN PLACE BY SCREW LOCKING MECHANISM

DENOTES TWISTED PAIR

SII 03 JUL 2014

PROPOSED
DESIGN NO. 13-0120
RED-IN YELLOW-OUT

AS INSTALLED
DATE _____
BY _____
(PRINT NAME)

PROPOSED D	M	Y	REVISIONS	D	C	COMPLETED D	M	Y	C

REGION SOUTHERN
SUB. CHICAGO 340

SIGNALS AND COMMUNICATIONS HOMEWOOD
03 JULY 2014
DES. TMF
CH. MRB

GCP 4000 UNIT #1
CPUII+ & VHF COMMUNICATOR
GILMAN, IL
6TH STREET

CHI-080.65-09

DOT#288 985T

chi-080.65-09.dgn
17-JUN-2015

SIEMENS INDUSTRY INC

DES.: TMF	DATE: 03/07/14	JOB NO.: WCNA10381	
CKD.: MRB	ISSUE DATE: N/A	EST. NO.: QDXP07259	
DRN.: TMF	PLAN NO.: N/A	SHEET 9 OF 41	
P. TIME: 11:36	P. DATE: 17-JUN-2015	CAD ID.: CHI-080.65-09	

SIEMENS INDUSTRY INC
LOUISVILLE DIVISION, LOUISVILLE, KY