PRIME WARNING TIME = 25 SECONDS

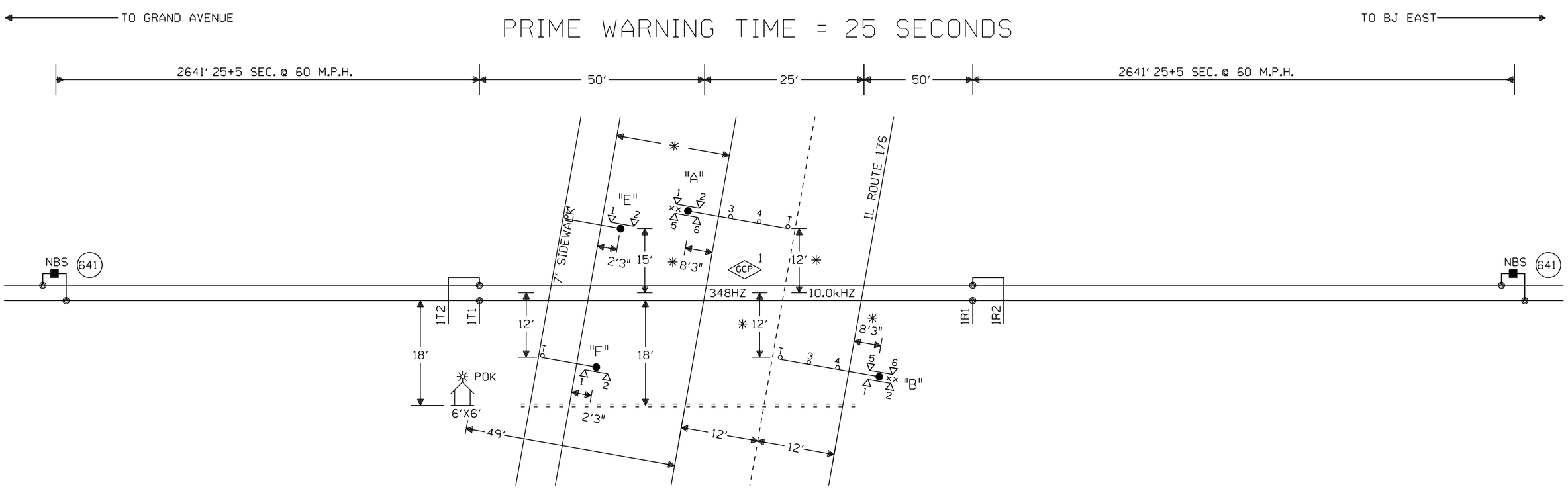

NOTES:

⊗ = TWISTED WIRES
INSULATED 1 TWIST PER FT.
ALL TRACK WIRES 2C. #6

TRANSMITTER AND RECEIVER LEADS
TO BE SEPARATED BY AT LEAST 12" IN TRENCH,
LENGTHS SHOULD NOT EXCEED MANUFACTURES
RECOMMENDATION.

TOP OF FOUNDATION TO BE AT SAME ELEVATION
AS THE SURFACE OF THE TRAVELED WAY & NO
MORE THAN 4" ABOVE THE SURFACE OF THE GROUND.

ALL BUNGALOW WIRING TO BE #16 AWG FLEX
UNLESS OTHERWISE SPECIFIED EXCEPT ALL GROUND
WIRE TO BE #6 AWG FLEX OR LARGER.

ALL WIRING IN GATE MECHANISM TO BE #10 "AWG FLEX".

REFER TO UP STANDARD DWG FOR BUNGALOW GROUNDING.

PORTABLE GENERATOR EXTENSION CORD
FOR 240V TO 240V IS PROVIDED AS WELL
AS A 120V TO 240V ADAPTER.

ALL LIGHTS TO BE 12" ROUNDELS.

= = = = = = 4" X 80' CONDUIT

LIGHTS: LED LIGHTS

GATE A: 20'
GATE B: 20'
GATE E: 10'
GATE F: 10'

xx = BELL

✳ = FIELD VERIFY

CONSTRUCTION NOTES:

1. UPGRADE AND MOVE EXISTING METER SERVICE.
2. INSTALL TWO PEDESTRIAN GATES
3. PLACE NEW 6X6 HOUSE IN SE QUADRANT
4. WIRE NEW HOUSE FOR FUTURE MEDIAN GATES
5. INSTALL A NEW CAR 14 AND EXTERNAL SSCC
6. REUSE EXISTING GATES
7. NEED FIELD TO VERIFY LOCATION OF NEW CABIN TO AVOID FUTURE CONSTRUCTION.
8. FIELD HAVE ICC PERSONNEL VERIFY THE PLACEMENT OF THE CABIN

W(S) ◄——○——► E(N)

NEW SHEET

Designed: 08/29/12
INSTALL PEDESTRIAN GATES WITH CWT AT M.P. 31.27 IL ROUTE 176
Rec*: AJA
IS: IRG/JTB
WO*: 15842

MODIFICATION LEVEL	
O. A. LAST LEVEL CHECKED	DU
LAST LEVEL MOD THIS TYPICAL	DU
LAST LEVEL BY DESIGNER	DU
CHANGED FROM TYPICAL?	Y

REV 01.24.11 4K 1TKBG.1

CIRCUIT MODIFICATIONS ARE NOT TO BE MADE WITHOUT AUTHORITY FROM THE OFFICE OF SIGNAL DESIGN

Date: 08/29/12
Des: IRG
Chk: AJA
AFE: 15842

UNION PACIFIC RAILROAD
LAKE BLUFF, ILLINOIS
IL ROUTE 176
MILWAUKEE SUBDIVISION
Office of Sr AVP Engineering - Signal/TCO Omaha, Nebraska

Sh.: 1
DOT 176819R
MP: 31.27
ID: NEW3127.1X

NEW3127.1X 11/12/2014 12:55:59 PM

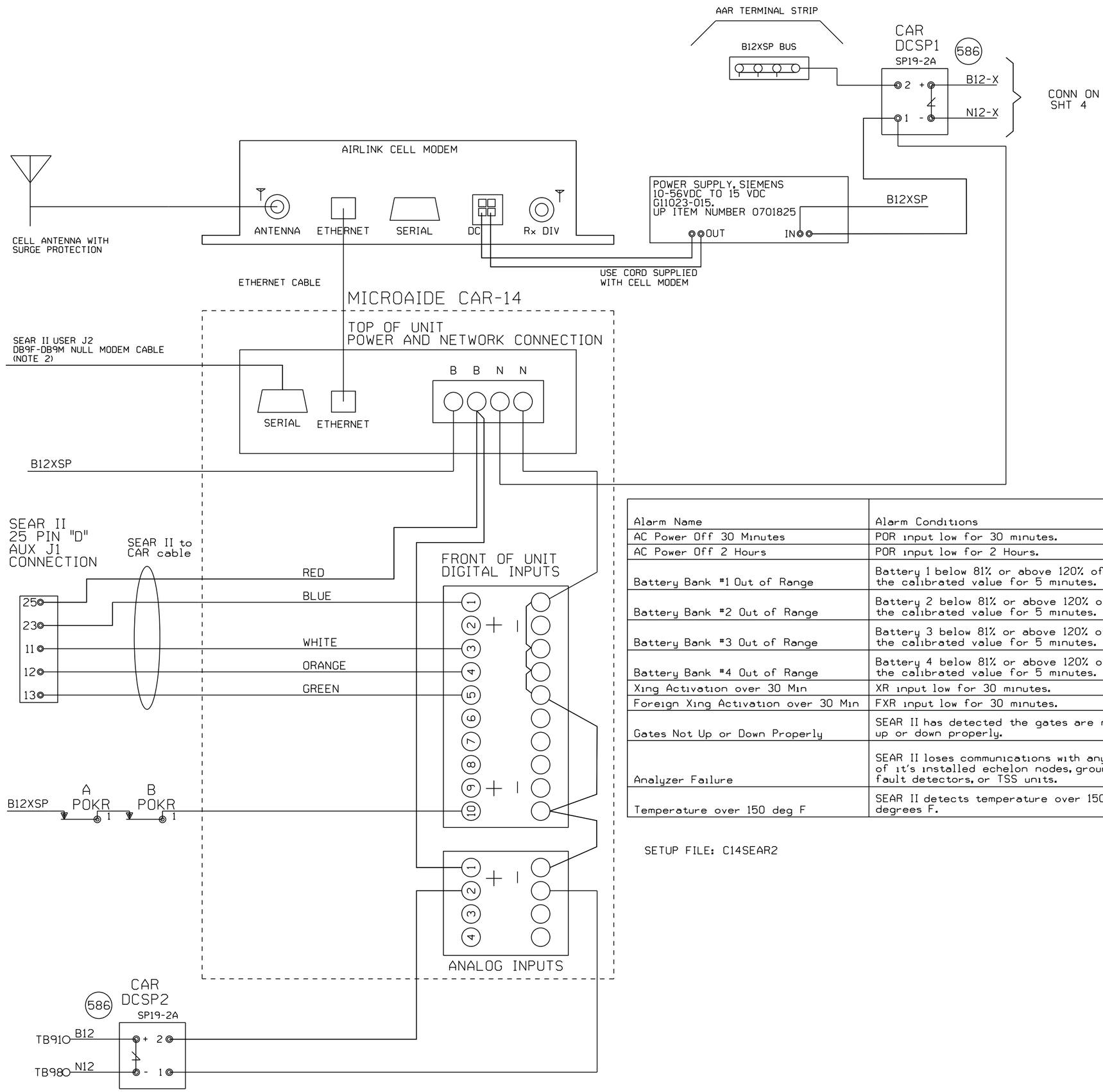

NOTE:
1) DO NOT JUMPER UNUSED INPUTS
2) THE CAR14 SERIAL PORT IS AVAILABLE TO ADD REMOTE CONNECTIVITY TO EXISTING LOGGING EQUIPMENT. USE NULL MODEM CABLE WITH SHIELDING DISCONNECTED AT ONE OR BOTH SIDES.

ANALOG INPUTS:
A1) B12X BATTERY BANK
A2) B12 BATTERY BANK
A3) BATTERY BANK 3
A4) BATTERY BANK 4

DIGITAL INPUTS
D1) XR (BLUE WIRE)
D2) FOREIGN XR
D3) ANALYZER FAILURE (WHITE WIRE)
D4) HIGH TEMPERATURE (ORANGE WIRE)
D5) GATES NOT UP OR DOWN PROPERLY (GREEN WIRE)
D10) POWER OFF INDICATION

Alarm Name	Alarm Conditions	Alarm Clearing Conditions	Cleared by Maintainer Mode?
AC Power Off 30 Minutes	POR input low for 30 minutes.	POR input high for 5 minutes.	No
AC Power Off 2 Hours	POR input low for 2 Hours.	POR input high for 5 minutes.	No
Battery Bank #1 Out of Range	Battery 1 below 81% or above 120% of the calibrated value for 5 minutes.	Battery 1 within acceptable range for 5 minutes.	No
Battery Bank #2 Out of Range	Battery 2 below 81% or above 120% of the calibrated value for 5 minutes.	Battery 2 within acceptable range for 5 minutes.	No
Battery Bank #3 Out of Range	Battery 3 below 81% or above 120% of the calibrated value for 5 minutes.	Battery 3 within acceptable range for 5 minutes.	No
Battery Bank #4 Out of Range	Battery 4 below 81% or above 120% of the calibrated value for 5 minutes.	Battery 4 within acceptable range for 5 minutes.	No
Xing Activation over 30 Min	XR input low for 30 minutes.	XR input high for 10 seconds.	Yes
Foreign Xing Activation over 30 Min	FXR input low for 30 minutes.	FXR input high for 10 seconds.	Yes
Gates Not Up or Down Properly	SEAR II has detected the gates are not up or down properly.	SEAR II has detected the gates are up or down properly.	No
Analyzer Failure	SEAR II loses communications with any of it's installed echelon nodes, ground fault detectors, or TSS units.	SEAR II has recovered after an analyzer failure alarm.	No
Temperature over 150 deg F	SEAR II detects temperature over 150 degrees F.	SEAR II sensor detects temperature is OK after a High-Temp alarm.	No

SETUP FILE: C14SEAR2

NEW SHEET

Designed: 08/29/12
INSTALL PEDESTRIAN GATES WITH CWT AT M.P. 31.27 IL ROUTE 176
Rec#: WO#: 15842
IS: /AJA
/ / IRG/JTB

MODIFICATION LEVEL	
Q.A. LAST LEVEL CHECKED	DU
LAST LEVEL MOD THIS TYPICAL	DU
LAST LEVEL BY DESIGNER	DU
CHANGED FROM TYPICAL?	Y

REV 01.24.11 4K ACDCCAR14SII.3

CIRCUIT MODIFICATIONS ARE NOT TO BE MADE WITHOUT AUTHORITY FROM THE OFFICE OF SIGNAL DESIGN

Date: 08/29/12
Des: IRG
Chk: AJA
AFE: 15842

UNION PACIFIC RAILROAD
LAKE BLUFF, ILLINOIS
IL ROUTE 176
MILWAUKEE SUBDIVISION
Office of Sr AVP Engineering - Signal/TCO Omaha, Nebraska

Sh.: 2A
DOT 176819R
MP: 31.27
ID: NEW3127.2AX

NEW3127.2AX 11/12/2014 12:56:02 PM

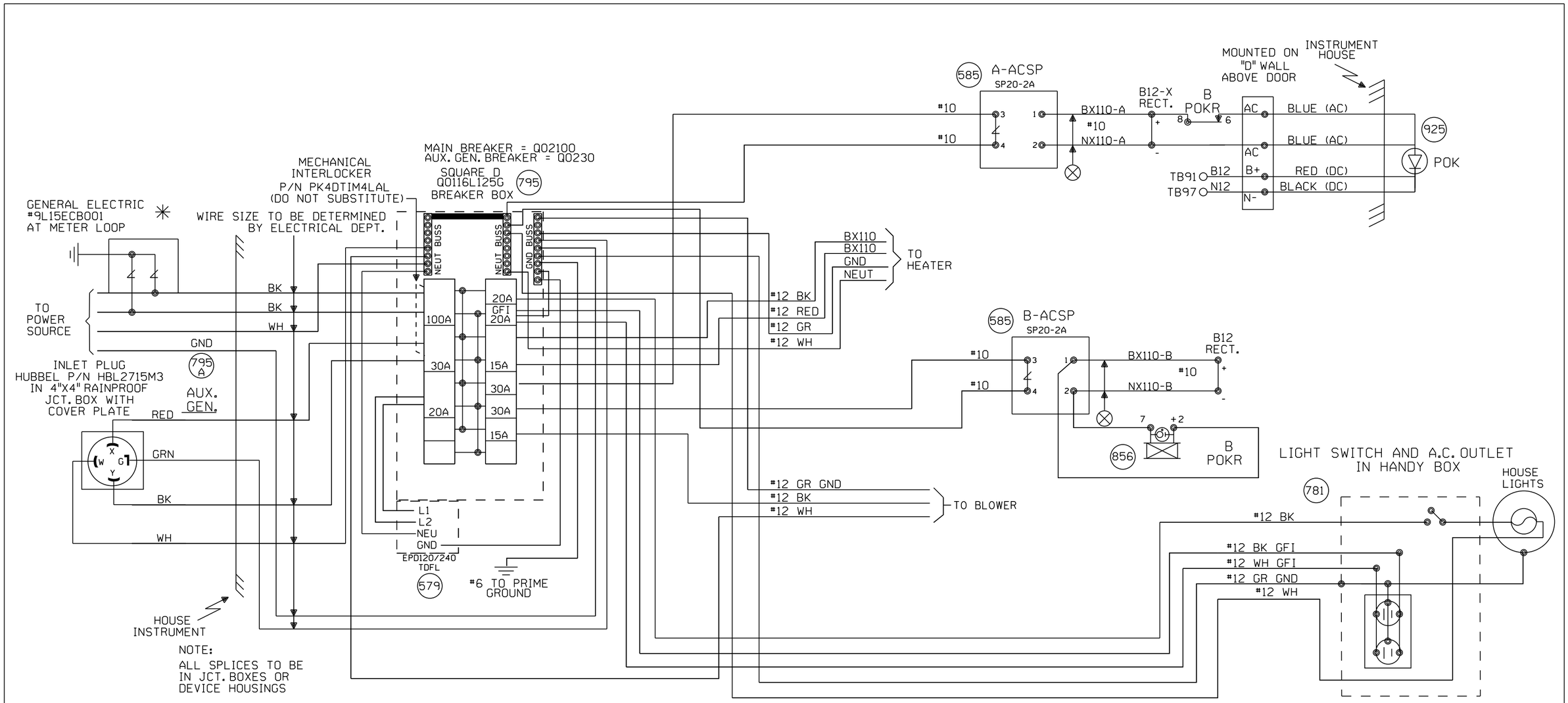

NEW SHEET

Designed: 08/29/12	MODIFICATION LEVEL		CIRCUIT MODIFICATIONS ARE NOT TO BE MADE WITHOUT AUTHORITY FROM THE OFFICE OF SIGNAL DESIGN	Date: 08/29/12	UNION PACIFIC RAILROAD
INSTALL PEDESTRIAN GATES WITH CWT AT M.P. 31.27 IL ROUTE 176	Q.A. LAST LEVEL CHECKED	DU		Des: IRG	LAKE BLUFF, ILLINOIS
	LAST LEVEL MOD THIS TYPICAL	DU		Chk: AJA	IL ROUTE 176
	LAST LEVEL BY DESIGNER	DU			MILWAUKEE SUBDIVISION
Rec*: WO*: 15842 /AJA	CHANGED FROM TYPICAL?	Y		AFE: 15842	Office of Sr AVP Engineering - Signal/TCO Omaha, Nebraska
IS: / IRG/JTB	REV 01.24.11 4K SEARAC.2				

Sh.:	2
DOT	176819R
MP:	31.27
ID:	NEW3127.2X

NEW3127.2X 11/12/2014 12:56:04 PM

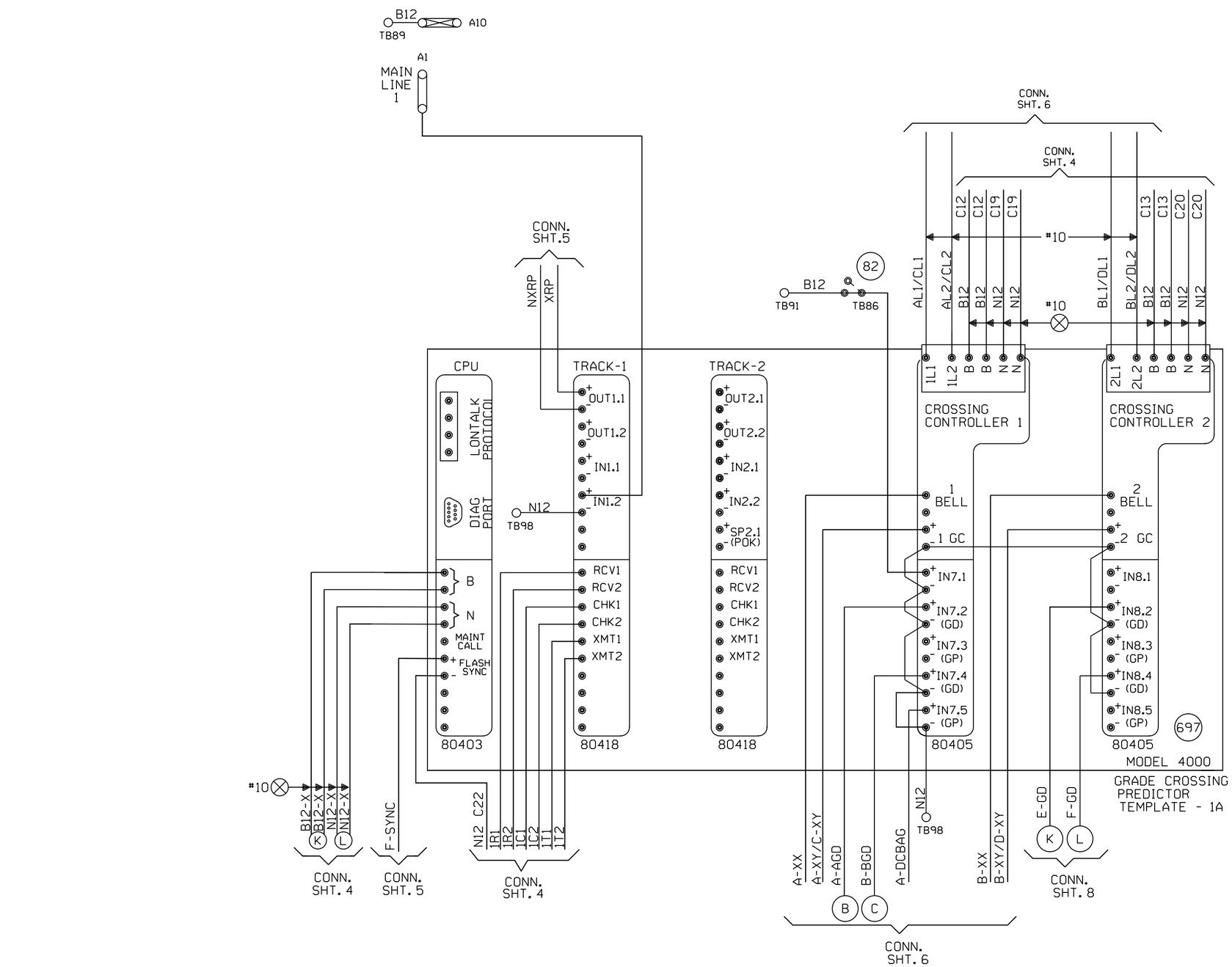

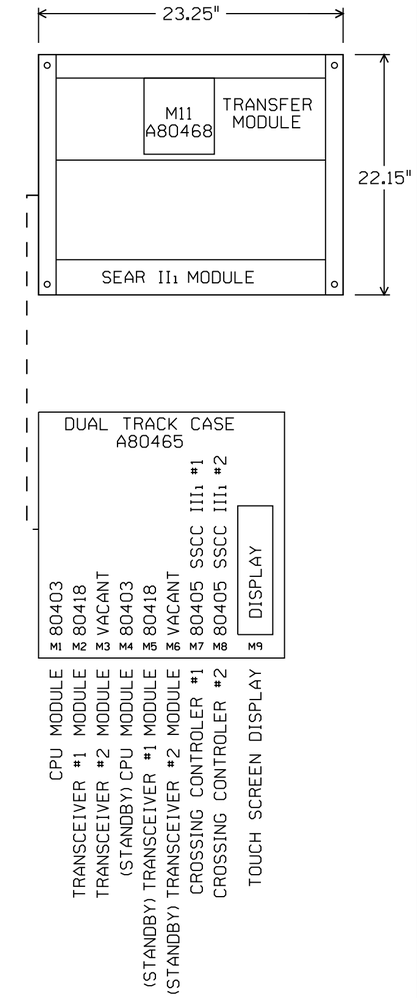

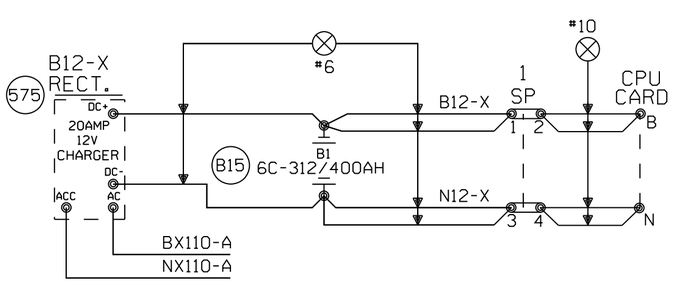

"Mf" FREQUENCY (HZ)	MAXIMUM TRANSMIT WIRE LENGTH (FEET)
86	100
114	125
156	150
211	200
285-970	250

NOTE:
EACH TRANSMITTER TO RAIL WIRE FROM XMT1 AND XMT2 MUST NOT EXCEED THE MAXIMUM LENGTH SPECIFIED IN THE TABLE SHOWN. THE RECEIVER WIRE LENGTH IS NOT CRITICAL. DOES NOT APPLY TO 6 TRACK WIRE APPLICATION.

NEW SHEET

Designed: 08/29/12
INSTALL PEDESTRIAN GATES WITH CWT AT M.P. 31.27 IL ROUTE 176
Rec*: WO*: 15842 /AJA
IS: / IRG/JTB

MODIFICATION LEVEL	
O. A. LAST LEVEL CHECKED	DU
LAST LEVEL MOD THIS TYPICAL	DU
LAST LEVEL BY DESIGNER	DU
CHANGED FROM TYPICAL?	Y

REV 01.24.11 4K 2TKGF.3

CIRCUIT MODIFICATIONS ARE NOT TO BE MADE WITHOUT AUTHORITY FROM THE OFFICE OF SIGNAL DESIGN

Date: 08/29/12
Des: IRG
Chk: AJA
AFE: 15842

UNION PACIFIC RAILROAD
LAKE BLUFF, ILLINOIS
IL ROUTE 176
MILWAUKEE SUBDIVISION
Office of Sr AVP Engineering - Signal/TCO Omaha, Nebraska

Sh.: 3
DOT 176819R
MP: 31.27
ID: NEW3127.3X

NEW3127.3X 11/12/2014 12:56:07 PM

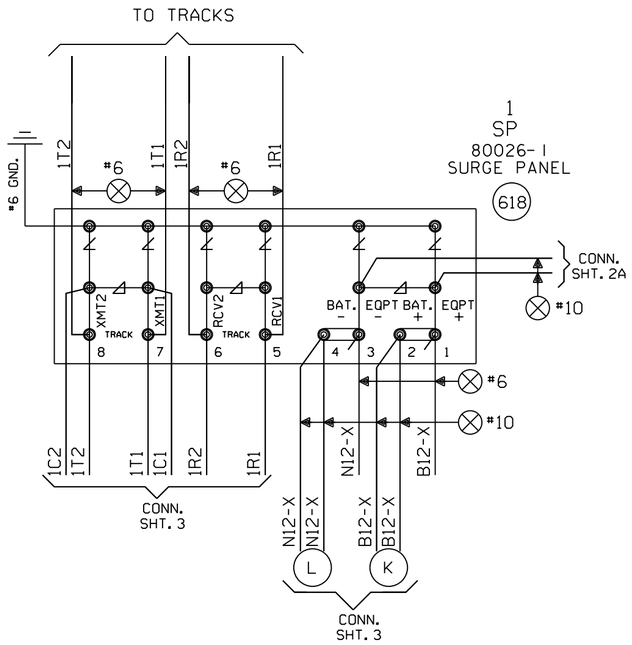

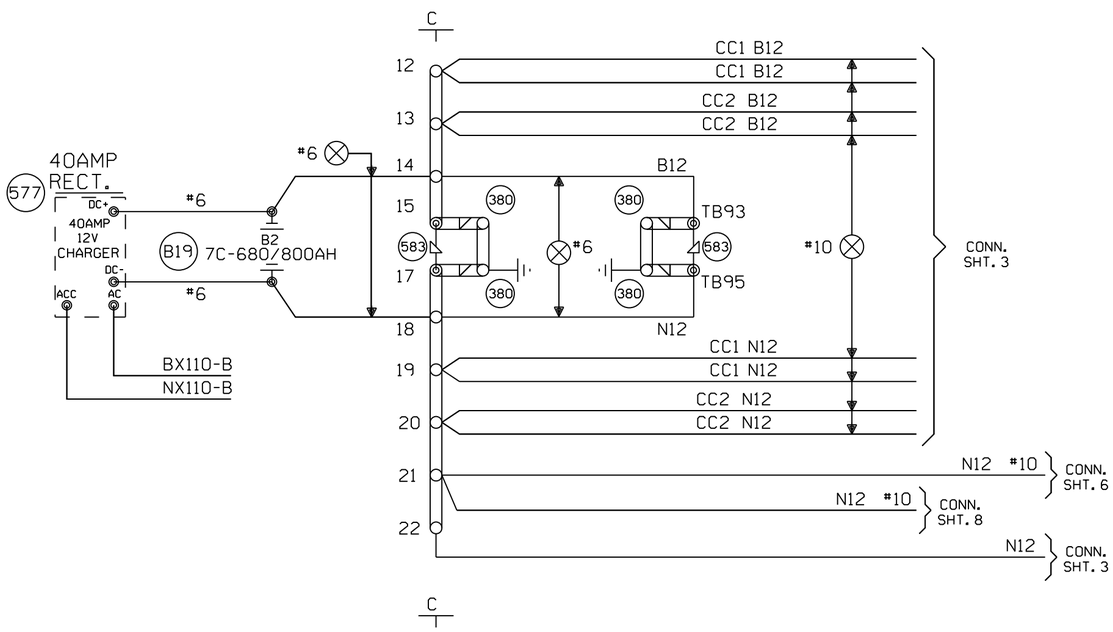

NEW SHEET

					Designed: 08/29/12 INSTALL PEDESTRIAN GATES WITH CWT AT M.P. 31.27 IL ROUTE 176 Rec#: IS: WO#: 15842 /AJA / / IRG/JTB	MODIFICATION LEVEL		CIRCUIT MODIFICATIONS ARE NOT TO BE MADE WITHOUT AUTHORITY FROM THE OFFICE OF SIGNAL DESIGN	Date: 08/29/12 Des: IRG Chk: AJA AFE: 15842	UNION PACIFIC RAILROAD LAKE BLUFF, ILLINOIS IL ROUTE 176 MILWAUKEE SUBDIVISION Office of Sr AVP Engineering - Signal/TCO Omaha, Nebraska	Sh.: 4 DOT 176819R MP: 31.27 ID: NEW3127.4X
						Q. A. LAST LEVEL CHECKED	DU				
						LAST LEVEL MOD THIS TYPICAL	DU				
						LAST LEVEL BY DESIGNER	DU				
						CHANGED FROM TYPICAL? REV 01.24.11 4K 4TKSPGFC.4	Y				

NEW3127.4X 11/12/2014 12:56:09 PM

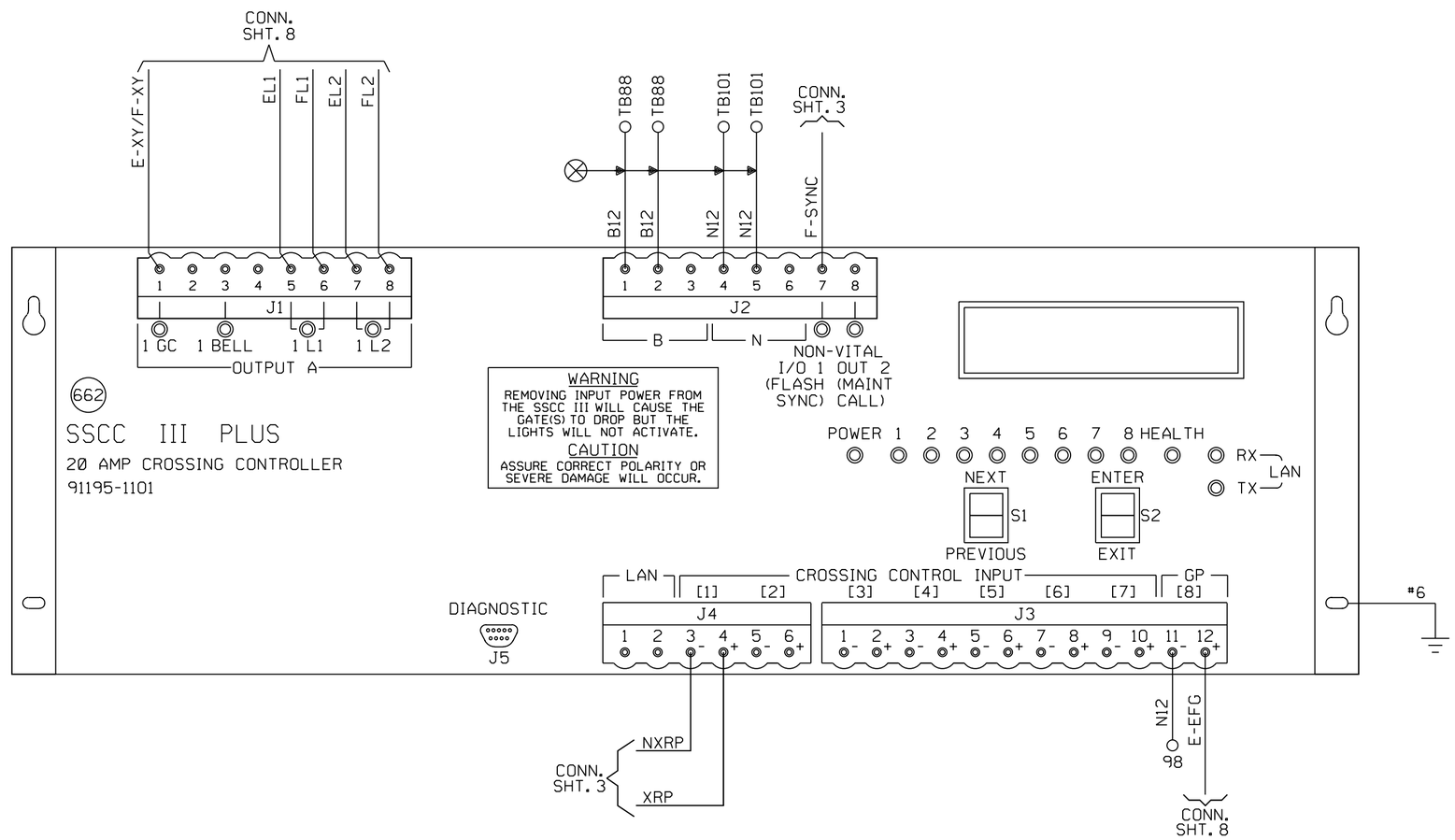

IMPORTANT

THE PROGRAM MCF AND ID LISTED BELOW MUST BE ENTERED IN THE PROGRAM SETUP ROUTINE FOR THIS SOLID STATE CROSSING CONTROLLER TO FUNCTION PROPERLY.

PROGRAM MCF: BASICPLS

PROGRAM ID: 087

NOTE

SSCC MCF software H or above requires SEAR II sorfware revision G or above to establish communications.

NEW SHEET

Designed: 08/29/12

INSTALL PEDESTRIAN GATES WITH CWT AT M.P. 31.27 IL ROUTE 176

Rec#: IS:

WO#: 15842 /AJA / IRG/JTB

MODIFICATION LEVEL	
Q.A. LAST LEVEL CHK'D.	DH
LAST LEVEL MOD. THIS TYP.	DH
LAST LEVEL BY DESIGNER.	DU
CHANGED FROM TYP.? Y/N	Y

CIRCUIT MODIFICATIONS ARE NOT TO BE MADE WITHOUT AUTHORITY FROM THE OFFICE OF SIGNAL DESIGN

Date: 08/29/12
Des: IRG
Chk: AJA
AFE: 15842

UNION PACIFIC RAILROAD

LAKE BLUFF, ILLINOIS
IL ROUTE 176
MILWAUKEE SUBDIVISION

Office of Sr AVP Engineering - Signal/TCO Omaha, Nebraska

Sh.: 5
DOT 176819R
MP: 31.27
ID: NEW3127.5X

(REV. 01.01.04) (SSCCGF.5)

NEW3127.5X 11/12/2014 12:56:13 PM

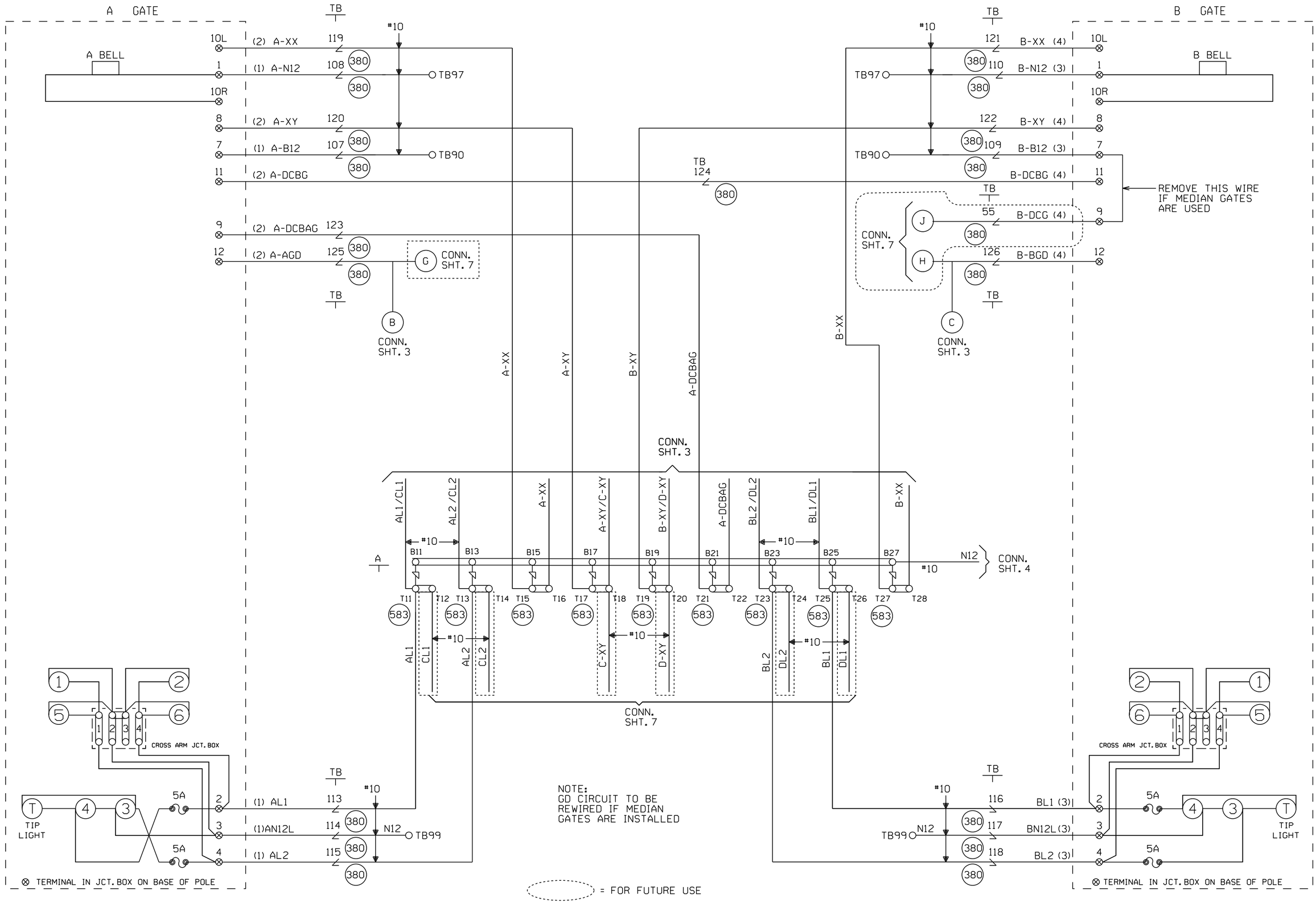

CABLE TABULATION

CABLE NO. 1 5C. NO.6 U.G.B.T. TO GATE A
CABLE NO. 2 7C. NO.14 U.G.B.T. TO GATE A
CABLE NO. 3 5C. NO.6 U.G.B.T. TO GATE B
CABLE NO. 4 7C. NO.14 U.G.B.T. TO GATE B

NEW SHEET

Designed: 08/29/12
INSTALL PEDESTRIAN GATES WITH CWT AT M.P. 31.27 IL ROUTE 176
Rec#: 15
WO#: 15842 /AJA / IRG/JTB

MODIFICATION LEVEL	
O. A. LAST LEVEL CHECKED	DU
LAST LEVEL MOD THIS TYPICAL	DU
LAST LEVEL BY DESIGNER	DU
CHANGED FROM TYPICAL?	Y

REV 01.24.11 4K 4GFTYP.5

CIRCUIT MODIFICATIONS ARE NOT TO BE MADE WITHOUT AUTHORITY FROM THE OFFICE OF SIGNAL DESIGN

Date: 08/29/12
Des: IRG
Chk: AJA
AFE: 15842

UNION PACIFIC RAILROAD
LAKE BLUFF, ILLINOIS
IL ROUTE 176
MILWAUKEE SUBDIVISION
Office of Sr AVP Engineering - Signal/TCO Omaha, Nebraska

Sh.: 6
DOT 176819R
MP: 31.27
ID: NEW3127.6X

NEW3127.6X 11/12/2014 12:56:15 PM

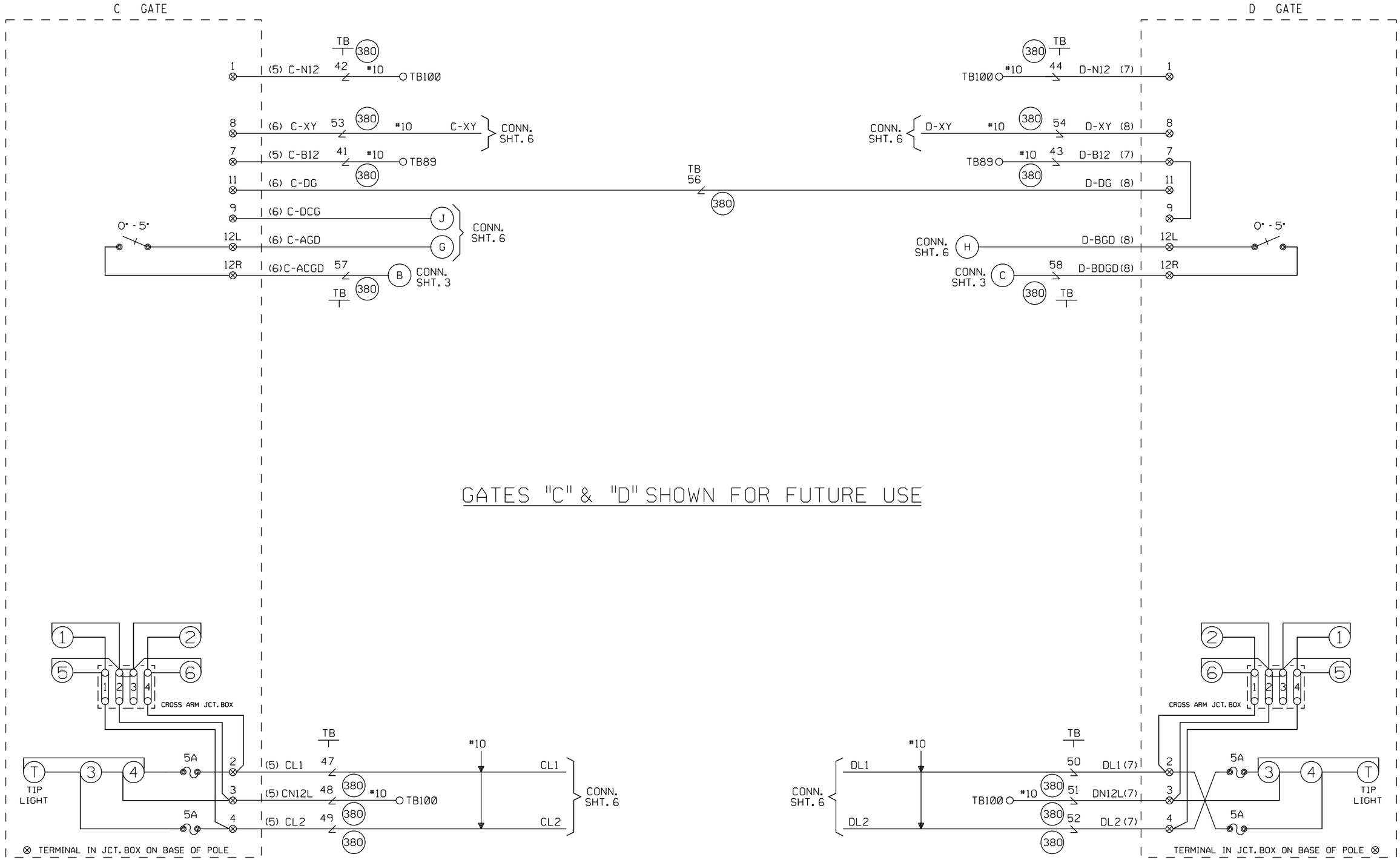

CABLE TABULATION

CABLE NO. 5 5C. NO.6 U.G.B.T. TO GATE C
CABLE NO. 6 7C. NO.14 U.G.B.T. TO GATE C
CABLE NO. 7 5C. NO.6 U.G.B.T. TO GATE D
CABLE NO. 8 7C. NO.14 U.G.B.T. TO GATE D

NEW SHEET

Designed: 08/29/12
INSTALL PEDESTRIAN GATES WITH CWT AT M.P. 31.27 IL ROUTE 176
Rec*: IS:
WO*: 15842 /AJA / IRG/JTB

MODIFICATION LEVEL	
O. A. LAST LEVEL CHECKED	DU
LAST LEVEL MOD THIS TYPICAL	DU
LAST LEVEL BY DESIGNER	DU
CHANGED FROM TYPICAL?	Y

REV 01.24.11 4K 4GFTYP.6

CIRCUIT MODIFICATIONS ARE NOT TO BE MADE WITHOUT AUTHORITY FROM THE OFFICE OF SIGNAL DESIGN

Date: 08/29/12
Des: IRG
Chk: AJA
AFE: 15842

UNION PACIFIC RAILROAD
LAKE BLUFF, ILLINOIS
IL ROUTE 176
MILWAUKEE SUBDIVISION
Office of Sr AVP Engineering - Signal/TCO Omaha, Nebraska

Sh.: 7
DOT 176819R
MP: 31.27
ID: NEW3127.7X

NEW3127.7X 11/12/2014 12:56:18 PM

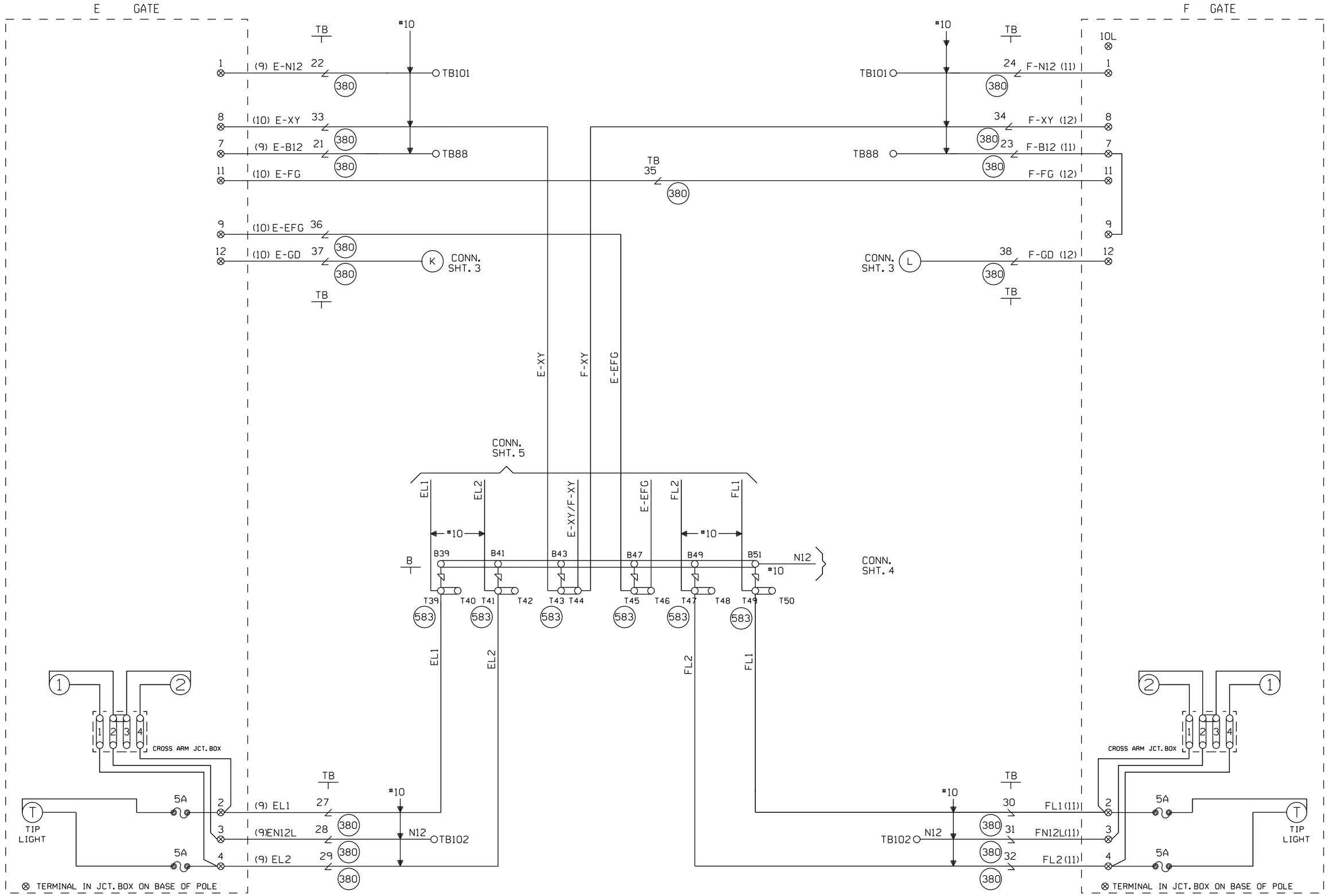

CABLE TABULATION

CABLE NO. 9 5C. NO.6 U.G.B.T. TO GATE E
CABLE NO. 10 7C. NO.14 U.G.B.T. TO GATE E
CABLE NO. 11 5C. NO.6 U.G.B.T. TO GATE F
CABLE NO. 12 7C. NO.14 U.G.B.T. TO GATE F

NEW SHEET

Designed: 08/29/12
INSTALL PEDESTRIAN GATES WITH CWT AT M.P. 31.27 IL ROUTE 176
Rec#: WO#: 15842
IS: /AJA / IRG/JTB

MODIFICATION LEVEL	
Q. A. LAST LEVEL CHECKED	DU
LAST LEVEL MOD THIS TYPICAL	DU
LAST LEVEL BY DESIGNER	DU
CHANGED FROM TYPICAL?	Y

REV 01.24.11 4K GFSLTYP.5

CIRCUIT MODIFICATIONS ARE NOT TO BE MADE WITHOUT AUTHORITY FROM THE OFFICE OF SIGNAL DESIGN

Date: 08/29/12
Des: IRG
Chk: AJA
AFE: 15842

UNION PACIFIC RAILROAD
LAKE BLUFF, ILLINOIS
IL ROUTE 176
MILWAUKEE SUBDIVISION
Office of Sr AVP Engineering - Signal/TCO Omaha, Nebraska

Sh.: 8
DOT 176819R
MP: 31.27
ID: NEW3127.8X

NEW3127.8X 11/12/2014 12:56:21 PM

WCH 3593-E

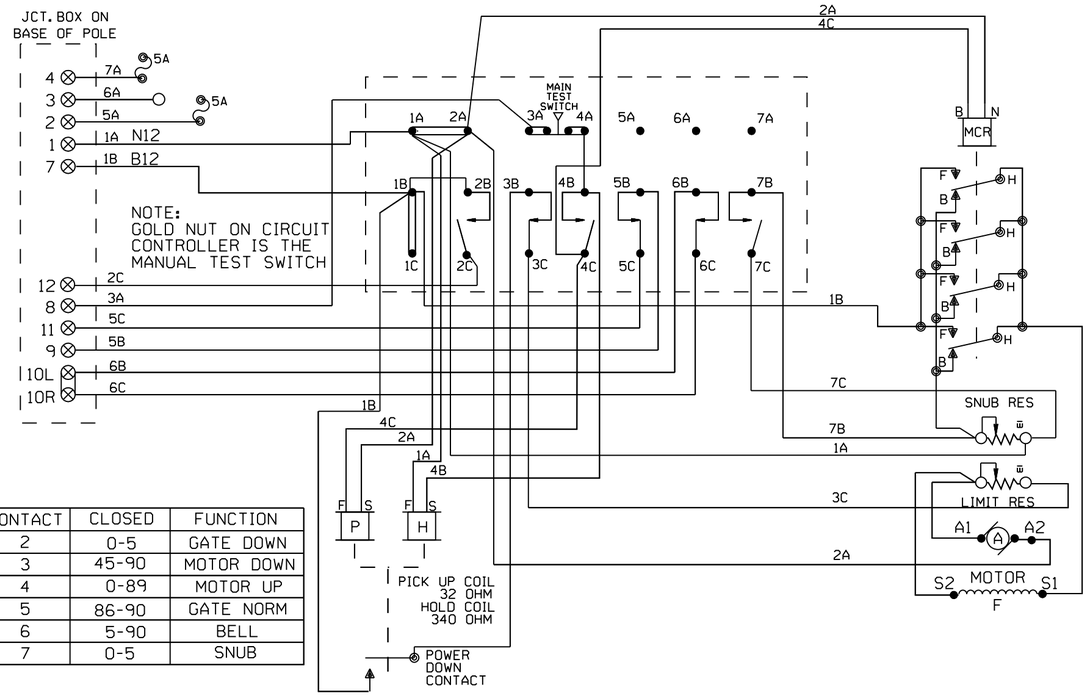

CONTACT	CLOSED	FUNCTION
2	0-5	GATE DOWN
3	45-90	MOTOR DOWN
4	0-89	MOTOR UP
5	86-90	GATE NORM
6	5-90	BELL
7	0-5	SNUB

WCH 3597-E

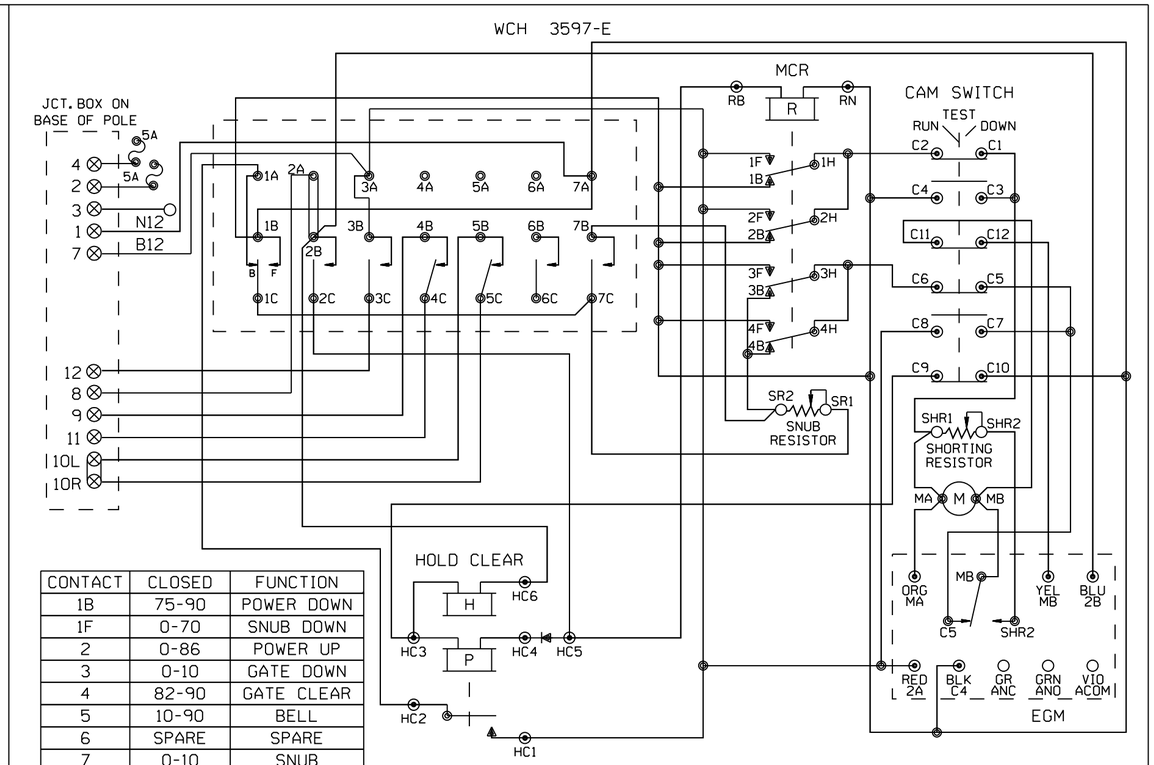

CONTACT	CLOSED	FUNCTION
1B	75-90	POWER DOWN
1F	0-70	SNUB DOWN
2	0-86	POWER UP
3	0-10	GATE DOWN
4	82-90	GATE CLEAR
5	10-90	BELL
6	SPARE	SPARE
7	0-10	SNUB

WCH 3590

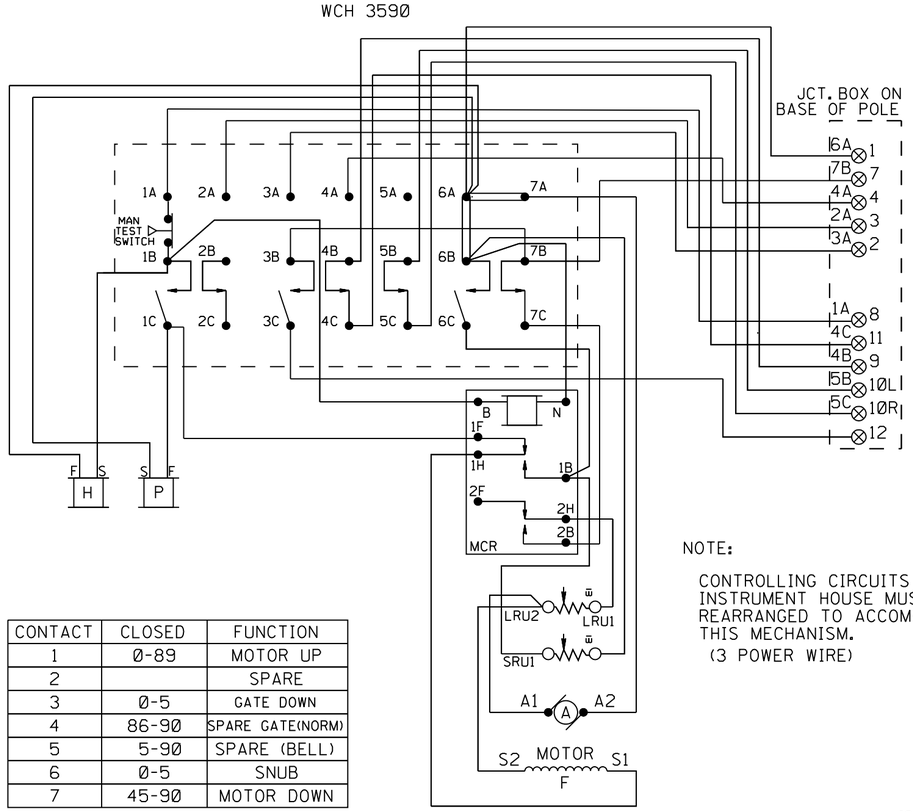

CONTACT	CLOSED	FUNCTION
1	0-89	MOTOR UP
2		SPARE
3	0-5	GATE DOWN
4	86-90	SPARE GATE(NORM)
5	5-90	SPARE (BELL)
6	0-5	SNUB
7	45-90	MOTOR DOWN

NOTE:

CONTROLLING CIRCUITS IN INSTRUMENT HOUSE MUST BE REARRANGED TO ACCOMODATE THIS MECHANISM.
(3 POWER WIRE)

JCT. BOX ON BASE POLE

L	R	L	R
1	1	7	7
2	2	8	8
3	3	9	9
4	4	10	10
5	5	11	11
6	6	12	12

SHOW TYPE MECH. INSTALLED

ALL MECHANISMS SHOWN IN THE CLEAR POSITION

SAFETRAN S-60

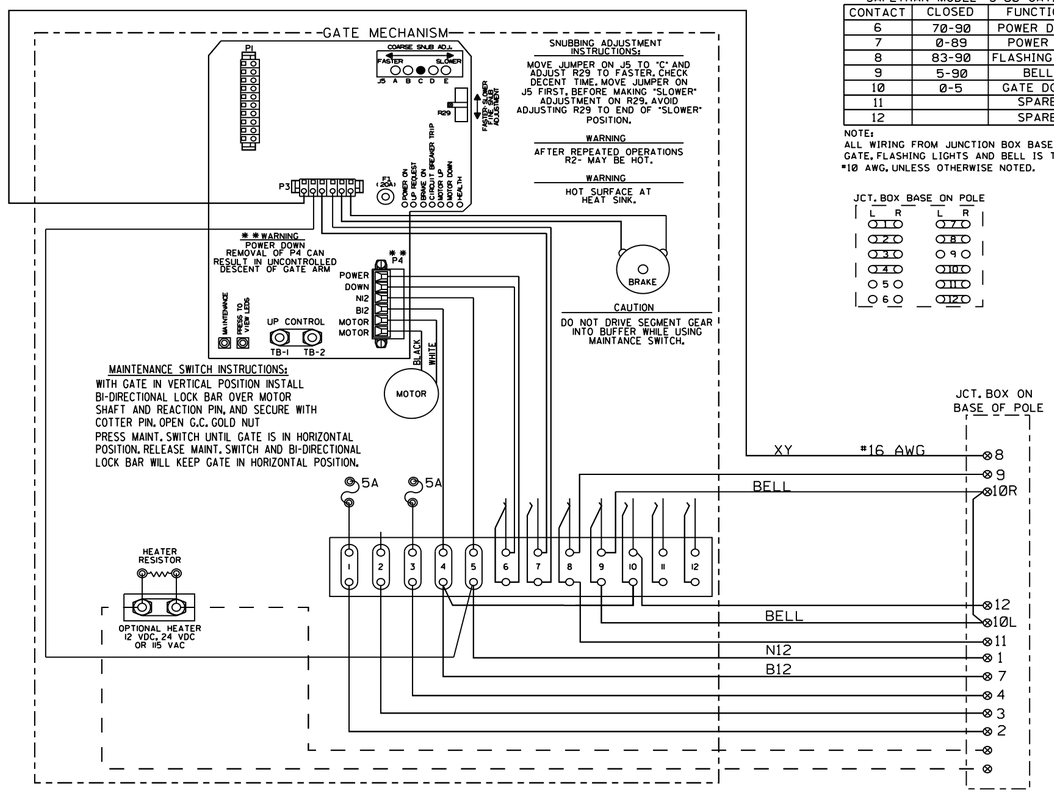

SAFETRAN MODEL "S-60" GATE

CONTACT	CLOSED	FUNCTION
6	70-90	POWER DOWN
7	0-89	POWER UP
8	83-90	FLASHING LGT.
9	5-90	BELL
10	0-5	GATE DOWN
11		SPARE
12		SPARE

NOTE:
ALL WIRING FROM JUNCTION BOX BASE TO GATE, FLASHING LIGHTS AND BELL IS TO BE #10 AWG, UNLESS OTHERWISE NOTED.

JCT. BOX BASE ON POLE

L	R	L	R
1	1	7	7
2	2	8	8
3	3	9	9
4	4	10	10
5	5	11	11
6	6	12	12

FOR WIRING GATES "A" & "B" & "E" & "F"

NEW SHEET

Designed: 08/29/12

INSTALL PEDESTRIAN GATES WITH CWT AT M.P. 31.27 IL ROUTE 176

Rec'd: WO#: 15842
IS: / /AJA / /IRG/JTB

MODIFICATION LEVEL	
O.A. LAST LEVEL CHECKED	DU
LAST LEVEL MOD THIS TYPICAL	DU
LAST LEVEL BY DESIGNER	DU
CHANGED FROM TYPICAL?	Y

REV 01.24.11 4K GWIRING.7

CIRCUIT MODIFICATIONS ARE NOT TO BE MADE WITHOUT AUTHORITY FROM THE OFFICE OF SIGNAL DESIGN

Date: 08/29/12
Des: IRG
Chk: AJA
AFE: 15842

UNION PACIFIC RAILROAD

LAKE BLUFF, ILLINOIS
IL ROUTE 176
MILWAUKEE SUBDIVISION

Office of Sr AVP Engineering - Signal/TCO Omaha, Nebraska

Sh.: 9
DOT 176819R
MP: 31.27
ID: NEW3127.9X

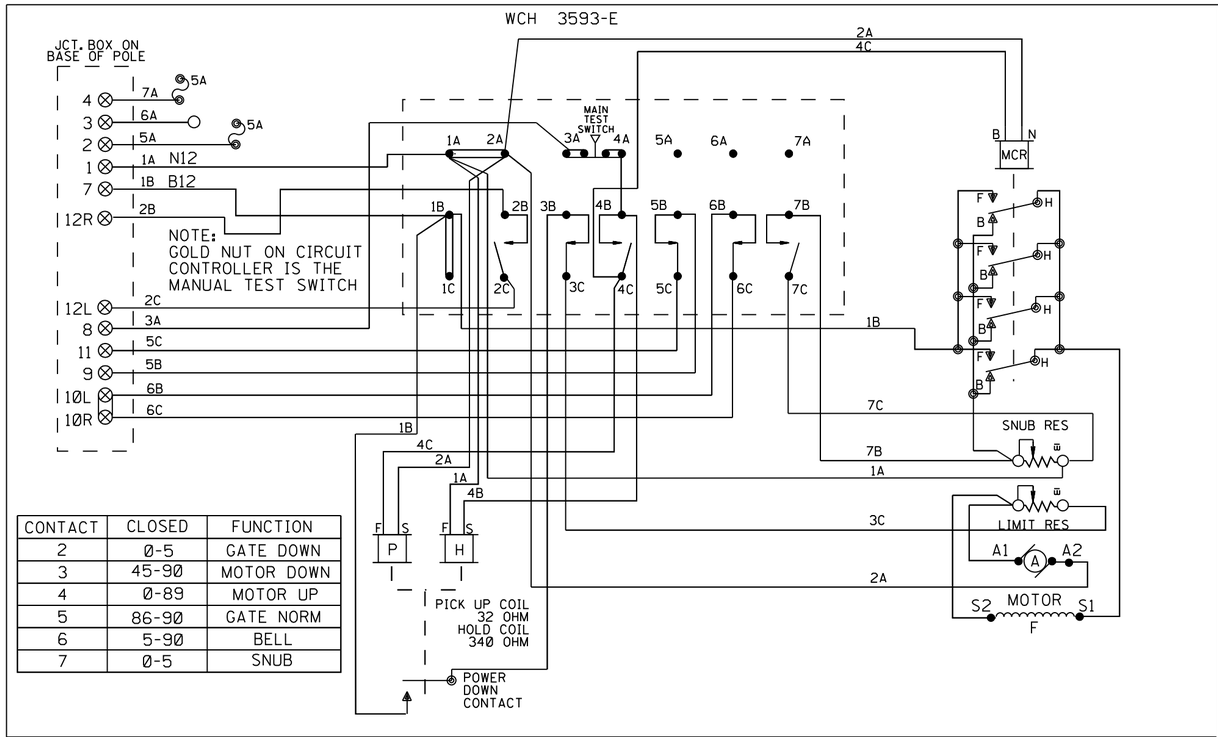

CONTACT	CLOSED	FUNCTION
2	0-5	GATE DOWN
3	45-90	MOTOR DOWN
4	0-89	MOTOR UP
5	86-90	GATE NORM
6	5-90	BELL
7	0-5	SNUB

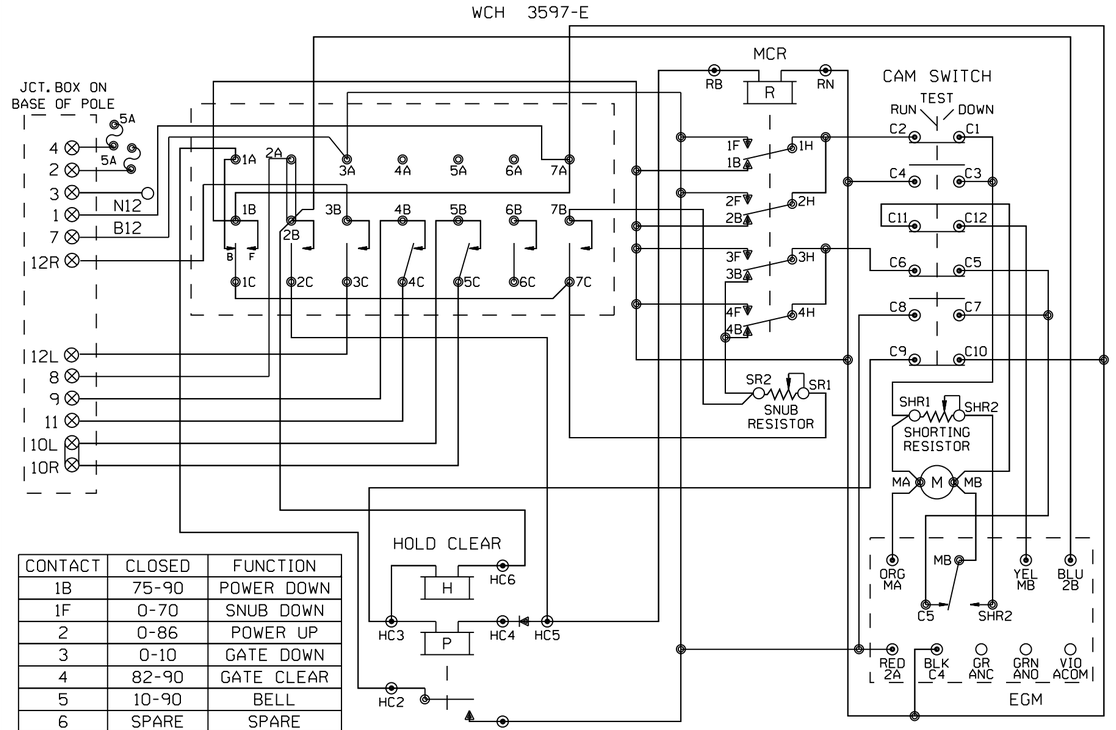

CONTACT	CLOSED	FUNCTION
1B	75-90	POWER DOWN
1F	0-70	SNUB DOWN
2	0-86	POWER UP
3	0-10	GATE DOWN
4	82-90	GATE CLEAR
5	10-90	BELL
6	SPARE	SPARE
7	0-10	SNUB

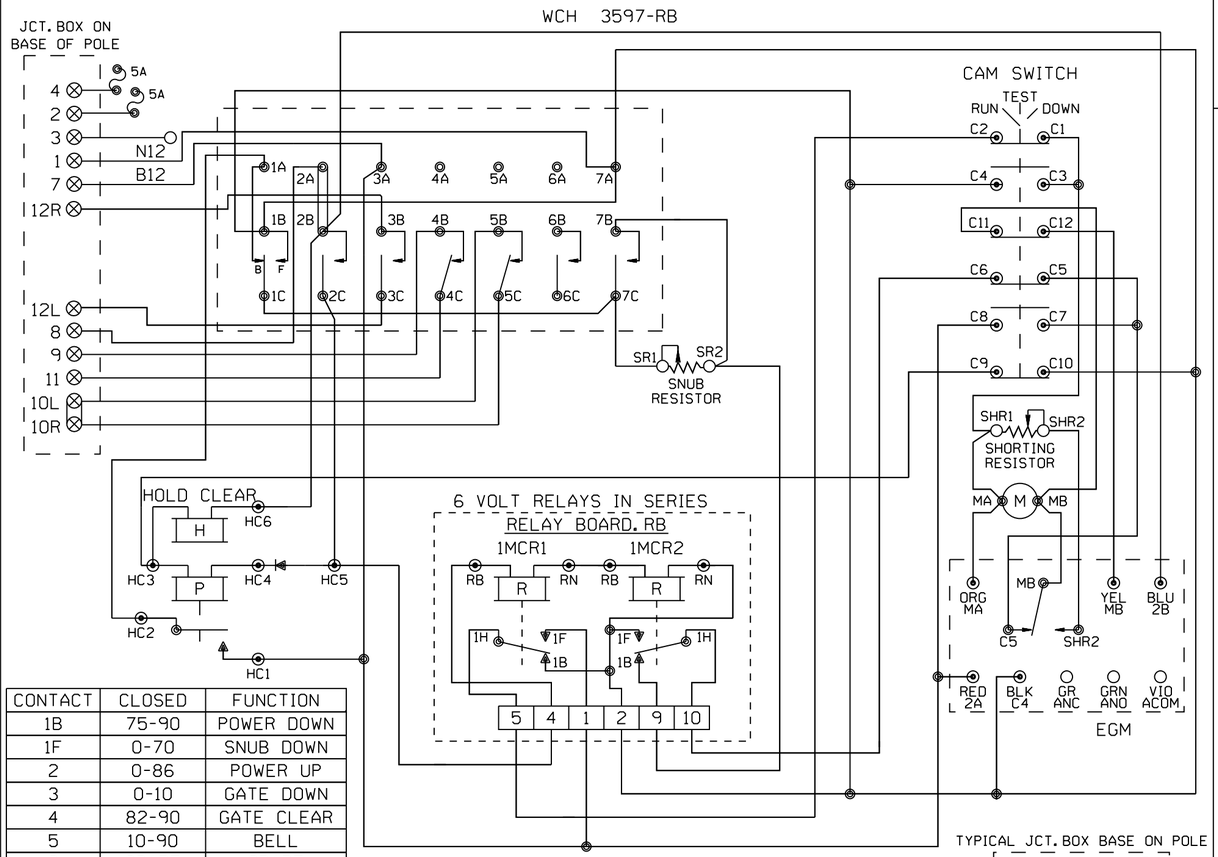

CONTACT	CLOSED	FUNCTION
1B	75-90	POWER DOWN
1F	0-70	SNUB DOWN
2	0-86	POWER UP
3	0-10	GATE DOWN
4	82-90	GATE CLEAR
5	10-90	BELL
6	SPARE	SPARE
7	0-10	SNUB

TYPICAL JCT. BOX BASE ON POLE

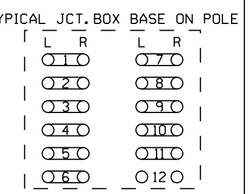

SHOW TYPE MECH. INSTALLED

ALL MECHANISM SHOWN IN CLEAR POSITION

SAFETRAN S-60

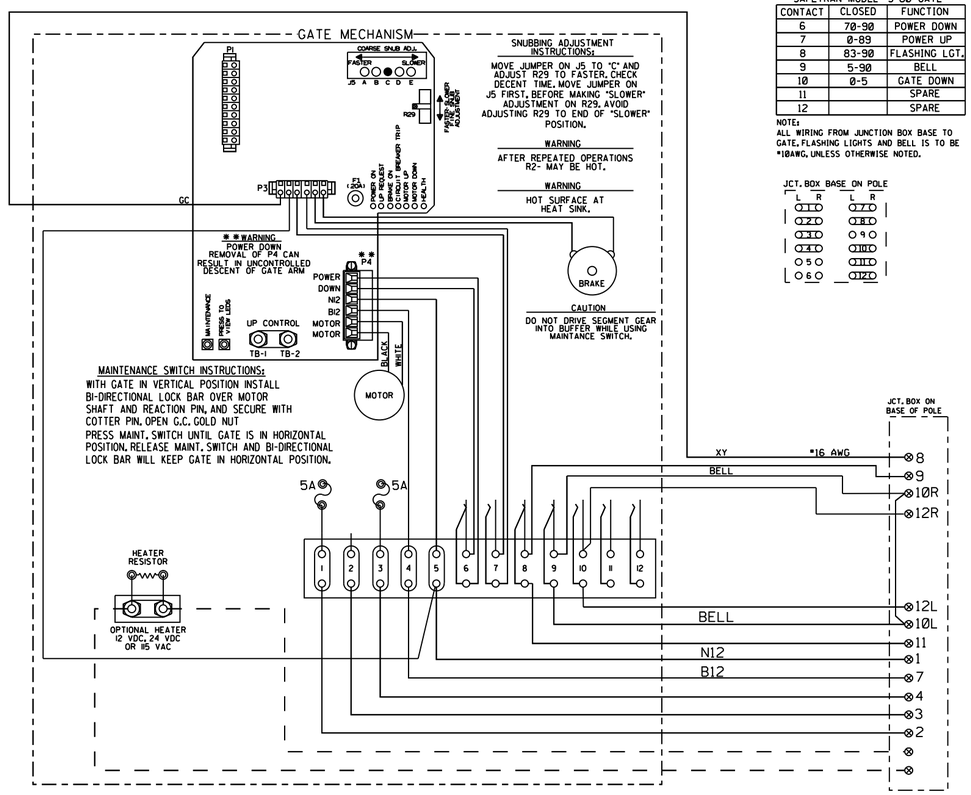

SAFETRAN MODEL "S-60" GATE

CONTACT	CLOSED	FUNCTION
6	70-90	POWER DOWN
7	0-89	POWER UP
8	83-90	FLASHING LGT.
9	5-90	BELL
10	0-5	GATE DOWN
11		SPARE
12		SPARE

NOTE:
ALL WIRING FROM JUNCTION BOX BASE TO GATE, FLASHING LIGHTS AND BELL IS TO BE #10AWG, UNLESS OTHERWISE NOTED.

JCT. BOX BASE ON POLE

FOR WIRING GATES "C" & "D"

NEW SHEET

Designed: 08/29/12
INSTALL PEDESTRIAN GATES WITH CWT AT M.P. 31.27 IL ROUTE 176
Rec#: WO#: 15842
IS: /AJA
/ / IRG/JTB

MODIFICATION LEVEL	
Q.A. LAST LEVEL CHECKED	DU
LAST LEVEL MOD THIS TYPICAL	DU
LAST LEVEL BY DESIGNER	DU
CHANGED FROM TYPICAL?	N

REV 01.24.11 4K 4GWIRING.8

CIRCUIT MODIFICATIONS ARE NOT TO BE MADE WITHOUT AUTHORITY FROM THE OFFICE OF SIGNAL DESIGN

Date: 08/29/12
Des: IRG
Chk: AJA
AFE: 15842

UNION PACIFIC RAILROAD
LAKE BLUFF, ILLINOIS
IL ROUTE 176
MILWAUKEE SUBDIVISION
Office of Sr AVP Engineering - Signal/TCO Omaha, Nebraska

Sh.: 10
DOT 176819R
MP: 31.27
ID: NEW3127.10X

NEW3127.10X 11/12/2014 12:56:26 PM

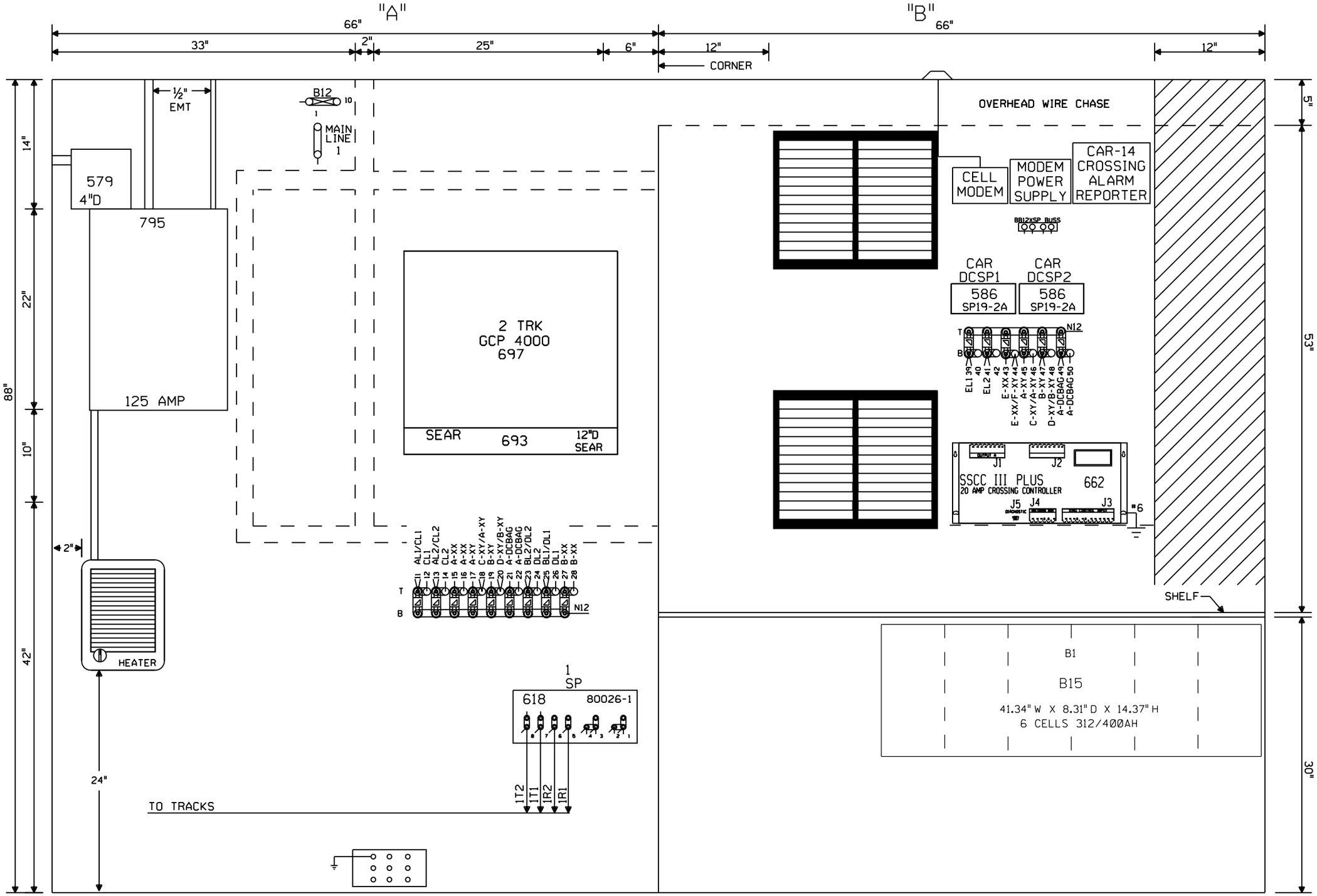

6X6 WAYSIDE/XING HOUSE WITH HEATER AND BLOWER U.P. PART#520-2529

NOTE: ALL DIMENSIONS SHOWN ARE APPROXIMATE.

NEW SHEET

Designed: 08/29/12 INSTALL PEDESTRIAN GATES WITH CWT AT M.P. 31.27 IL ROUTE 176 Rec#: IS: WO#: 15842 /AJA / IRG/JTB	MODIFICATION LEVEL		CIRCUIT MODIFICATIONS ARE NOT TO BE MADE WITHOUT AUTHORITY FROM THE OFFICE OF SIGNAL DESIGN	Date: 08/29/12 Des: IRG Chk: AJA AFE: 15842	UNION PACIFIC RAILROAD LAKE BLUFF, ILLINOIS IL ROUTE 176 MILWAUKEE SUBDIVISION Office of Sr AVP Engineering - Signal/TCO Omaha, Nebraska	Sh.: 11 DOT 176819R MP: 31.27 ID: NEW3127.11X
	Q.A. LAST LEVEL CHECKED	DU				
	LAST LEVEL MOD THIS TYPICAL	DU				
	LAST LEVEL BY DESIGNER	DU				
	CHANGED FROM TYPICAL?	Y				
	REV 01.24.11 4K 4TK4GF.9					

NEW3127.11X 11/12/2014 12:56:29 PM

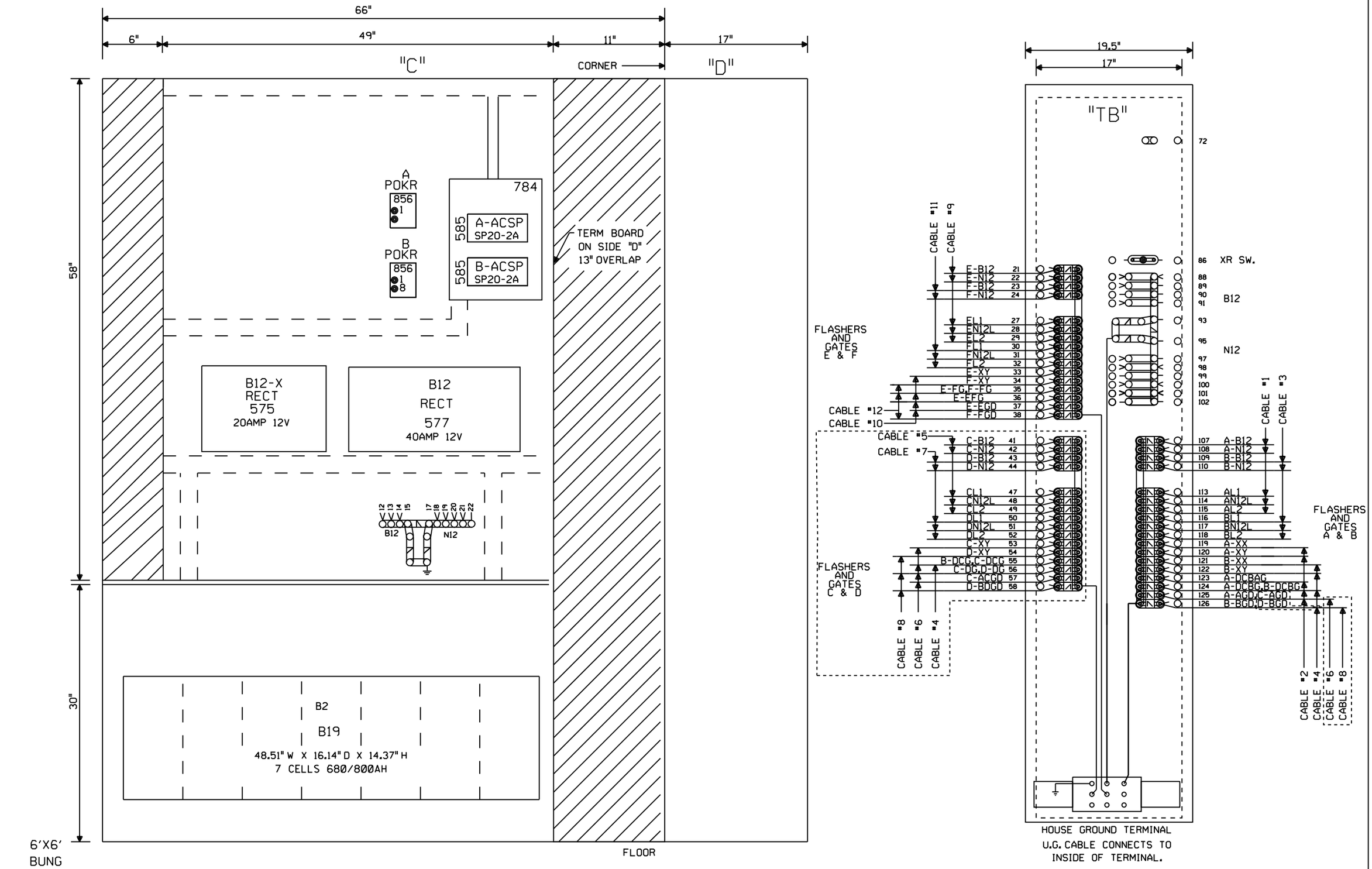

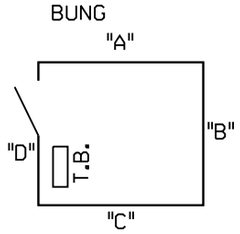

NOTE: ALL DIMENSIONS SHOWN ARE APPROXIMATE.

= FOR FUTURE USE

NOTE: NO TEST LINKS TO BE INSTALLED WITH CROSSING LIGHTING OR GATE MECH CIRCUITRY

NEW SHEET

Designed: 08/29/12
INSTALL PEDESTRIAN GATES WITH CWT AT M.P. 31.27 IL ROUTE 176
Rec#: IS: WO#: 15842 /AJA / IRG/JTB

MODIFICATION LEVEL	
Q.A. LAST LEVEL CHECKED	DU
LAST LEVEL MOD THIS TYPICAL	DU
LAST LEVEL BY DESIGNER	DU
CHANGED FROM TYPICAL?	Y

REV 01.24.11 4K 4GF.10

CIRCUIT MODIFICATIONS ARE NOT TO BE MADE WITHOUT AUTHORITY FROM THE OFFICE OF SIGNAL DESIGN

Date: 08/29/12
Des: IRG
Chk: AJA
AFE: 15842

UNION PACIFIC RAILROAD
LAKE BLUFF, ILLINOIS
IL ROUTE 176
MILWAUKEE SUBDIVISION
Office of Sr AVP Engineering - Signal/TCO Omaha, Nebraska

Sh.: 12
DOT 176819R
MP: 31.27
ID: NEW3127.12X

NEW3127.12X 11/12/2014 12:56:32 PM