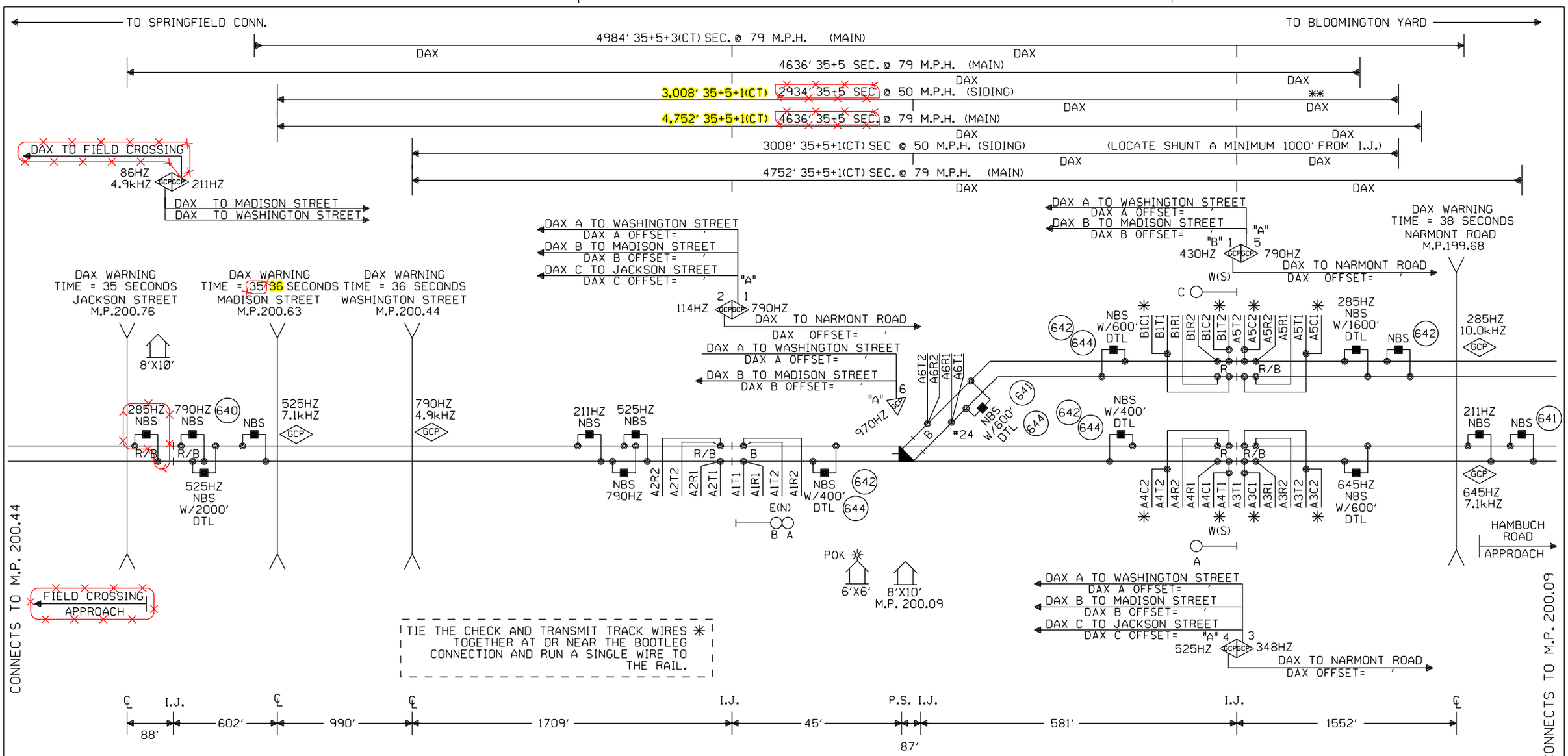

NOTES:

⊗ = TWISTED WIRES
ALL TRACK WIRES 2C. #6
INSULATED 1 TWIST PER FT.

TRANSMITTER AND RECEIVER LEADS
TO BE SEPARATED BY AT LEAST 12" IN TRENCH.
LENGTHS SHOULD NOT EXCEED MANUFACTURES
RECOMMENDATION.

ALL BUNGALOW WIRING TO BE #16 AWG FLEX
UNLESS OTHERWISE SPECIFIED EXCEPT ALL GROUND
WIRE TO BE #6 AWG FLEX OR LARGER.

REFER TO UP STANDARD DWG. FOR BUNGALOW
GROUNDING.

PORTABLE GENERATOR EXTENSION CORD
FOR 240V TO 240V IS PROVIDED AS WELL
AS A 120V TO 240V ADAPTER.

✱✱ = CROSSING APPROACH EXTENDED OUTSIDE
OF SIDING OS TRACK DUE TO MINIMUM APPROACH
DISTANCE REQUIRMENTS NOT BEING MET
(10 SECONDS NEEDED @ FASTEST TRAIN SPEED).

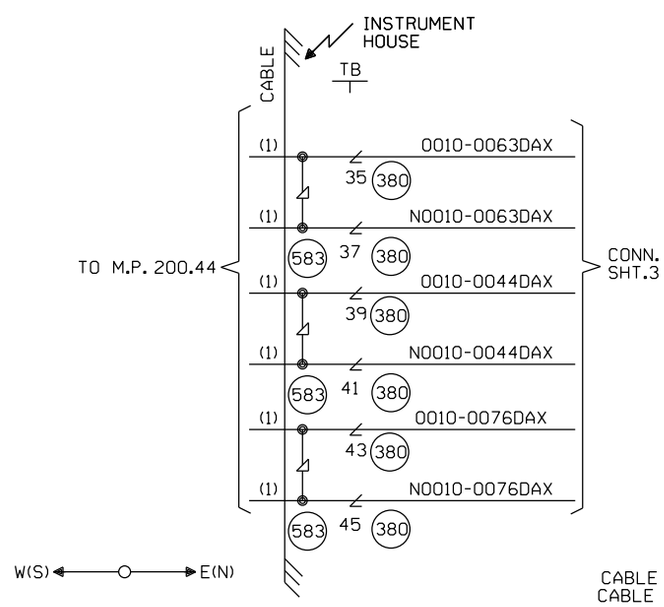

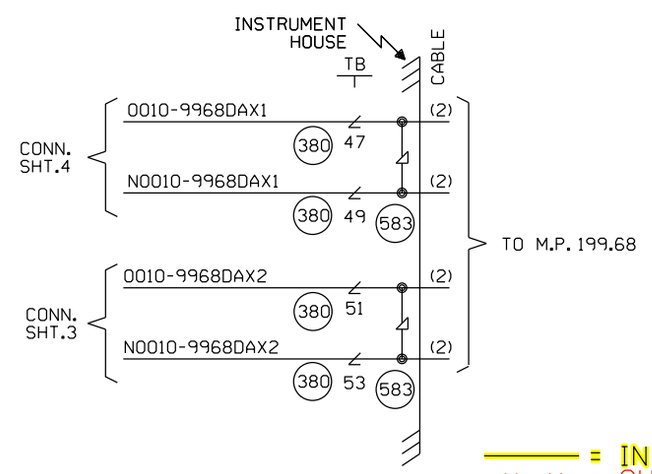

= IN
= OUT

CABLE TABULATION

CABLE #1 7C#14 U.G.B.T. HOUSE TO M.P. 200.44
CABLE #2 7C#14 U.G.B.T. HOUSE TO M.P. 199.68

NEW SHEET

Designed: 09/25/14 TIER 3 PHASE 1 M.P.202.30 TO M.P.194.80 HSR SCOPE CHANGE Rec#: WO#: 14052 IS: / / NST/MJF	Designed: 3/09/12 TIER 3 PHASE 1 M.P.202.30 TO M.P.194.80 UPGRADE XINGS TO 4 QUAD WITH EGMS, VARIOUS CP'S Rec#: WO#: 14052 IS: MWK/ / NST/MJF	MODIFICATION LEVEL	
		O. A. LAST LEVEL CHECKED	DU
		LAST LEVEL MOD THIS TYPICAL	DU
		LAST LEVEL BY DESIGNER	DU
		CHANGED FROM TYPICAL?	Y
		REV 01.24.11 4K REMOTE.1	

CIRCUIT MODIFICATIONS ARE NOT TO BE MADE WITHOUT AUTHORITY FROM THE OFFICE OF SIGNAL DESIGN

Date: 03/09/12
Des: NST
Chk: MWK
AFE: 14052

UNION PACIFIC RAILROAD
AUBURN, ILLINOIS
REMOTE LOCATION
SPRINGFIELD SUBDIVISION
Office of AVP Engineering - Signal Omaha, Nebraska

Sh.: 1
DOT 000000R
MP: 200.10
ID: CSL20010.1X