PRIME WARNING TIME = 26 SECONDS

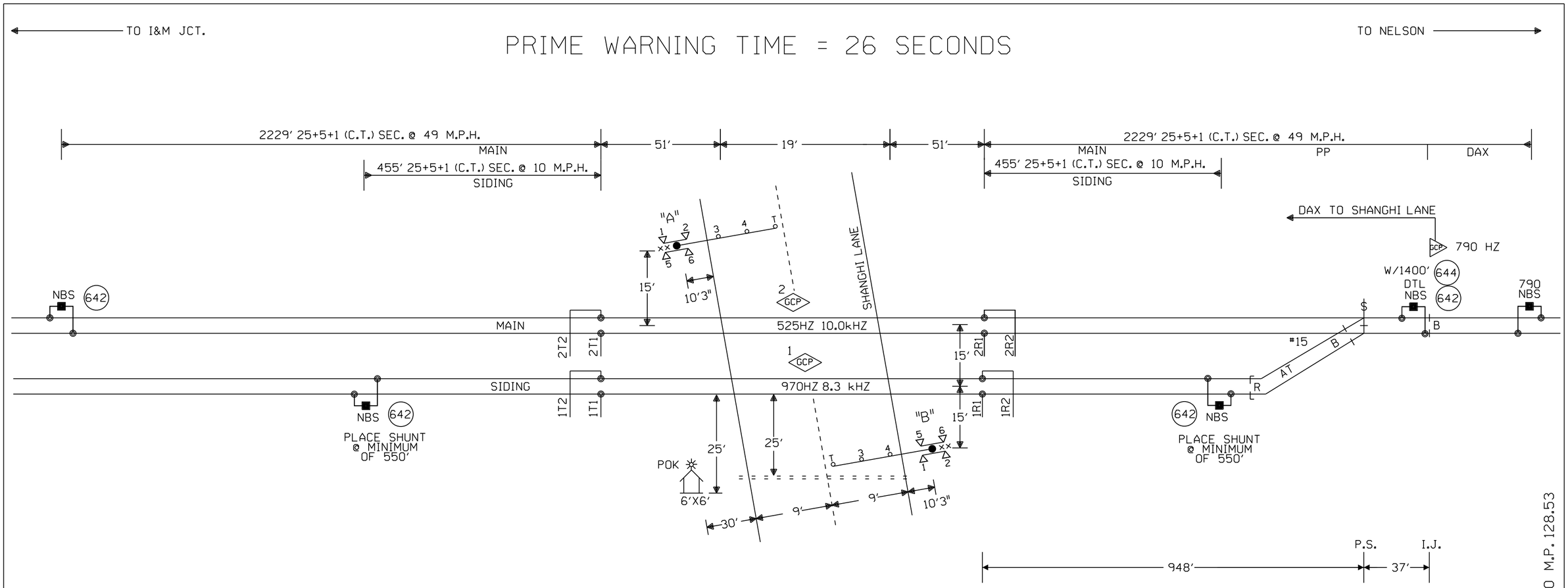

CONNECTS TO M.P. 128.53

NOTES:

⊗ = TWISTED WIRES
INSULATED 1 TWIST PER FT.
ALL TRACK WIRES 2C. #6

TRANSMITTER AND RECEIVER LEADS
TO BE SEPARATED BY AT LEAST 12" IN TRENCH,
LENGTHS SHOULD NOT EXCEED MANUFACTURES
RECOMMENDATION.

TOP OF FOUNDATION TO BE AT SAME ELEVATION
AS THE SURFACE OF THE TRAVELED WAY & NO
MORE THAN 4" ABOVE THE SURFACE OF THE GROUND.

ALL BUNGALOW WIRING TO BE #16 AWG FLEX
UNLESS OTHERWISE SPECIFIED EXCEPT ALL GROUND
WIRE TO BE #6 AWG FLEX OR LARGER.

ALL WIRING IN GATE MECHANISM TO BE #10 "AWG FLEX".

REFER TO UP STANDARD DWG FOR BUNGALOW GROUNDING.

PORTABLE GENERATOR EXTENSION CORD
FOR 240V TO 240V IS PROVIDED AS WELL
AS A 120V TO 240V ADAPTER.

ALL LIGHTS TO BE 12" ROUNDELS.

= = = = = = 4" X 40' CONDUIT

LIGHTS: LED LIGHTS

GATE A: 18'
GATE B: 18'

xx = BELL

OFFSET AND ISLAND DISTANCES
TO BE VERIFIED BY FIELD

W(S) ◄——○——► E(N)

CONSTRUCTION NOTES:
1) FIELD VERIFY ISLAND MEASURES A MINIMUM OF 120'
2) INSTALL NEW METER SERVICE
3) FIELD HAVE ICC PERSONNEL VERIFY PLACEMENT OF CABIN

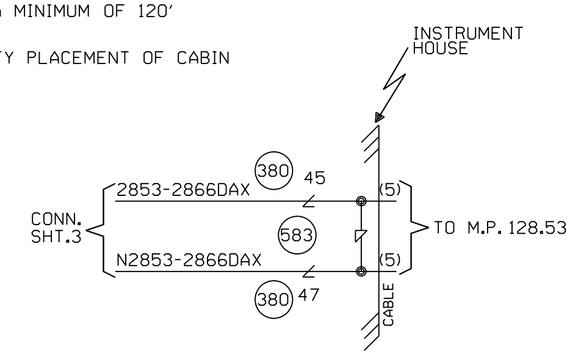

CABLE TABULATION

CABLE #5 7C#14 U.G.B.T. HOUSE TO MP. 128.53

NEW SHEET

Designed: 06/04/14	MODIFICATION LEVEL		CIRCUIT MODIFICATIONS ARE NOT TO BE MADE WITHOUT AUTHORITY FROM THE OFFICE OF SIGNAL DESIGN	Date: 06/04/14	UNION PACIFIC RAILROAD
INSTALL FLASHERS WITH GATES AND CWT. M.P. 128.66 SHANGHI LANE	Q.A. LAST LEVEL CHECKED	DU		Des: NBT	SWEETWATER, ILLINOIS SHANGHI LANE PEORIA SUBDIVISION
	LAST LEVEL MOD THIS TYPICAL	DU		Chk: MRN	
Rec#: WO#: 25087	LAST LEVEL BY DESIGNER	DU		AFE: 25087	Office of AVP Engineering - Signal Omaha, Nebraska
IS: /MRN / /NBT/JTB	CHANGED FROM TYPICAL?	Y			
	REV 01.24.11 4K 1TKBG.1				

Sh.: 1
DOT 175477P
MP: 128.66
ID: STL12866.1X

STL12866.1X 7/17/2014 8:50:55 AM

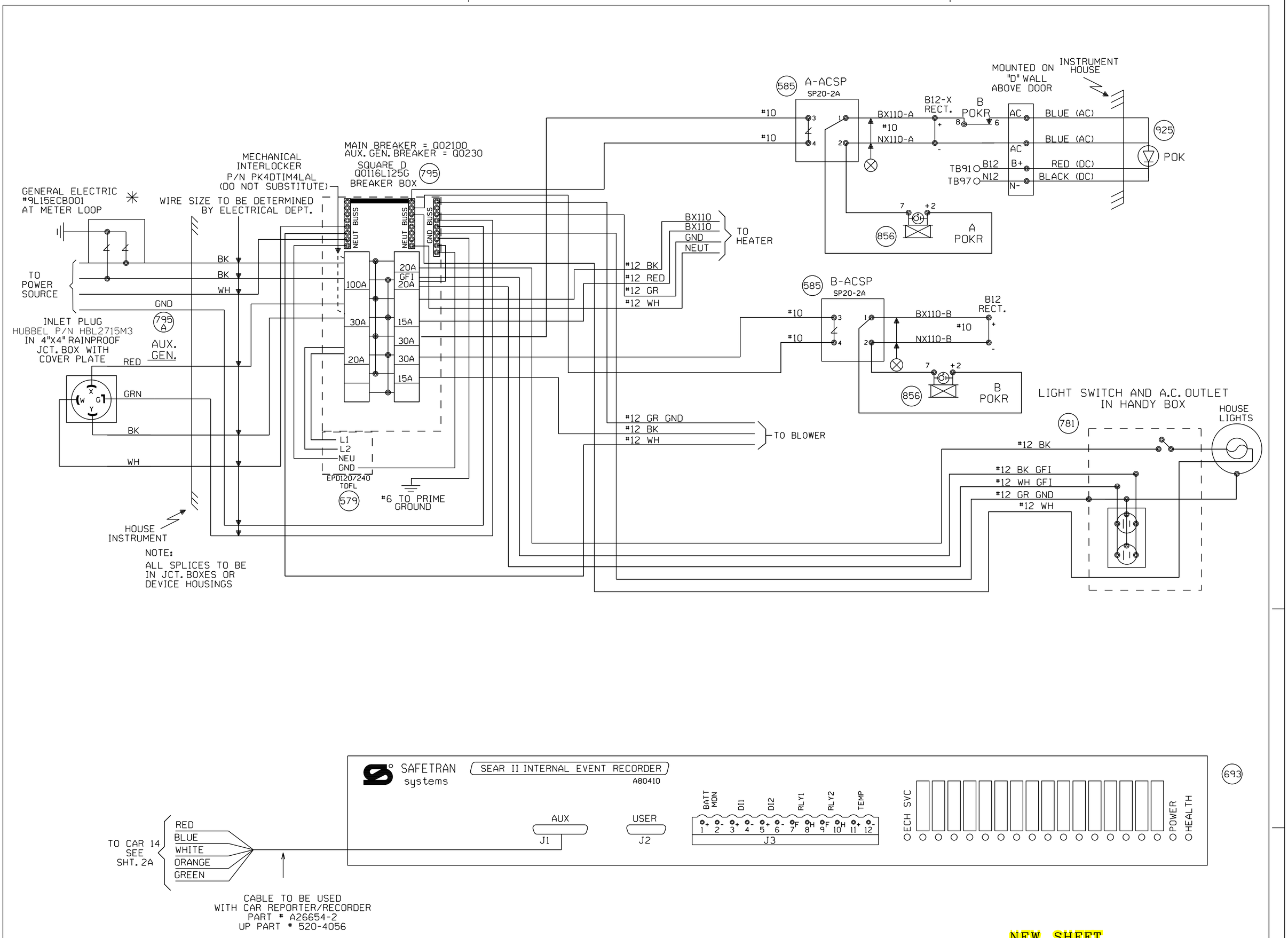

NEW SHEET

Designed: 06/04/14 INSTALL FLASHERS WITH GATES AND CWT. M.P. 128.66 SHANGHI LANE Rec#: WO#: 25087 IS: /AJA / /NBT/JTB	MODIFICATION LEVEL		CIRCUIT MODIFICATIONS ARE NOT TO BE MADE WITHOUT AUTHORITY FROM THE OFFICE OF SIGNAL DESIGN	Date: 06/04/14 Des: NBT Chk: AJA AFE: 25087	UNION PACIFIC RAILROAD SWEETWATER, ILLINOIS SHANGHI LANE PEORIA SUBDIVISION Office of AVP Engineering - Signal Omaha, Nebraska	Sh.: 2 DOT 175477P MP: 128.66 ID: STL12866.2X
	Q.A. LAST LEVEL CHECKED	DU				
	LAST LEVEL MOD THIS TYPICAL	DU				
	LAST LEVEL BY DESIGNER	DU				
	CHANGED FROM TYPICAL? REV 01.24.11 4K SEARAC.2	Y				

STL12866.2X 7/17/2014 8:50:48 AM

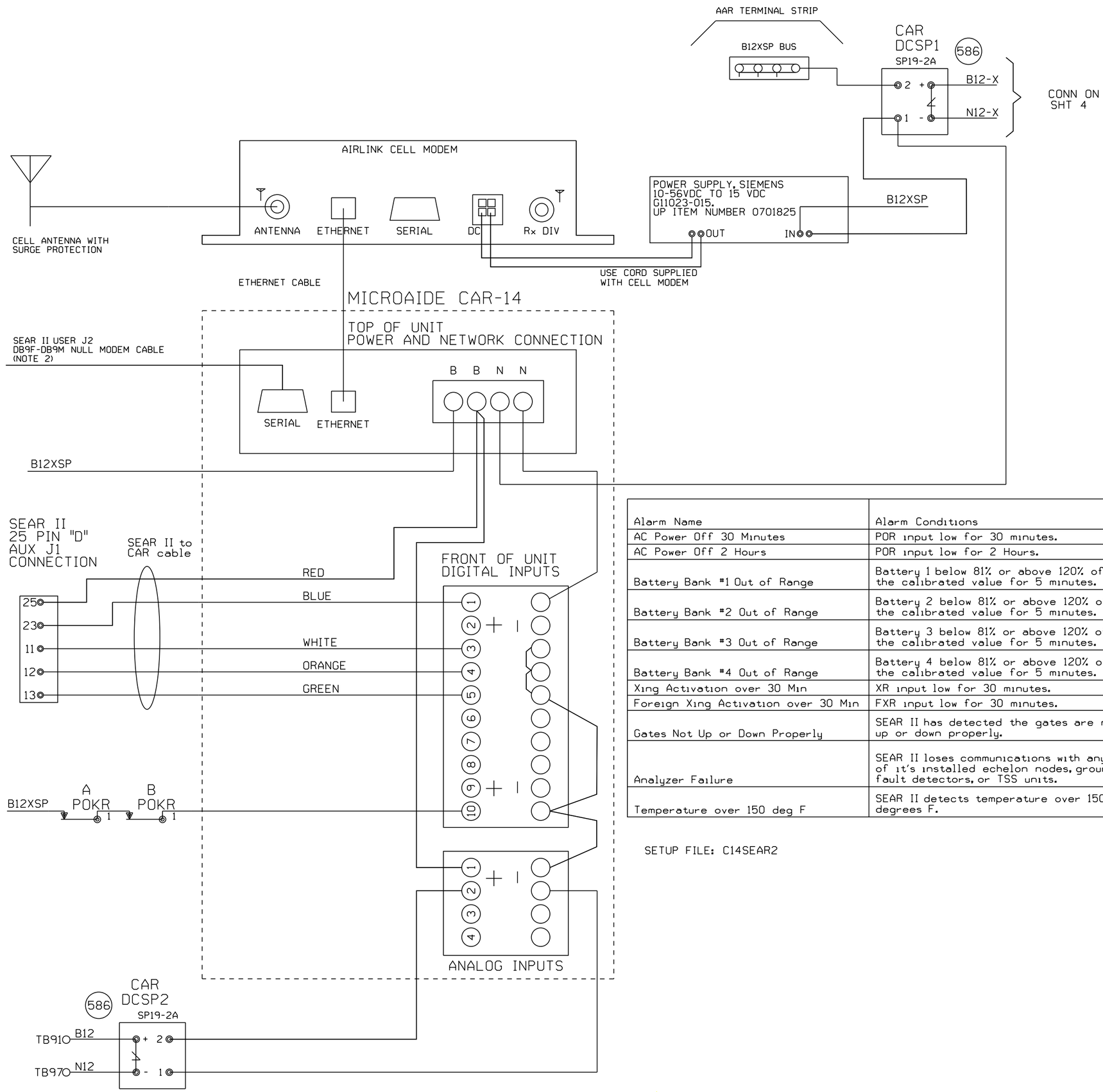

NOTE:
1) DO NOT JUMPER UNUSED INPUTS
2) THE CAR14 SERIAL PORT IS AVAILABLE TO ADD REMOTE CONNECTIVITY TO EXISTING LOGGING EQUIPMENT. USE NULL MODEM CABLE WITH SHIELDING DISCONNECTED AT ONE OR BOTH SIDES.

ANALOG INPUTS:
A1) B12X BATTERY BANK
A2) B12 BATTERY BANK
A3) BATTERY BANK 3
A4) BATTERY BANK 4

DIGITAL INPUTS
D1) XR (BLUE WIRE)
D2) FOREIGN XR
D3) ANALYZER FAILURE (WHITE WIRE)
D4) HIGH TEMPERATURE (ORANGE WIRE)
D5) GATES NOT UP OR DOWN PROPERLY (GREEN WIRE)
D10) POWER OFF INDICATION

Alarm Name	Alarm Conditions	Alarm Clearing Conditions	Cleared by Maintainer Mode?
AC Power Off 30 Minutes	POR input low for 30 minutes.	POR input high for 5 minutes.	No
AC Power Off 2 Hours	POR input low for 2 Hours.	POR input high for 5 minutes.	No
Battery Bank #1 Out of Range	Battery 1 below 81% or above 120% of the calibrated value for 5 minutes.	Battery 1 within acceptable range for 5 minutes.	No
Battery Bank #2 Out of Range	Battery 2 below 81% or above 120% of the calibrated value for 5 minutes.	Battery 2 within acceptable range for 5 minutes.	No
Battery Bank #3 Out of Range	Battery 3 below 81% or above 120% of the calibrated value for 5 minutes.	Battery 3 within acceptable range for 5 minutes.	No
Battery Bank #4 Out of Range	Battery 4 below 81% or above 120% of the calibrated value for 5 minutes.	Battery 4 within acceptable range for 5 minutes.	No
Xing Activation over 30 Min	XR input low for 30 minutes.	XR input high for 10 seconds.	Yes
Foreign Xing Activation over 30 Min	FXR input low for 30 minutes.	FXR input high for 10 seconds.	Yes
Gates Not Up or Down Properly	SEAR II has detected the gates are not up or down properly.	SEAR II has detected the gates are up or down properly.	No
Analyzer Failure	SEAR II loses communications with any of it's installed echelon nodes, ground fault detectors, or TSS units.	SEAR II has recovered after an analyzer failure alarm.	No
Temperature over 150 deg F	SEAR II detects temperature over 150 degrees F.	SEAR II sensor detects temperature is OK after a High-Temp alarm.	No

SETUP FILE: C14SEAR2

NEW SHEET

Designed: 06/04/14
INSTALL FLASHERS WITH GATES AND CWT.
M.P. 128.66
SHANGHI LANE
Rec*: WO*: 25087
IS: / /AJA
/ /NBT/JTB

MODIFICATION LEVEL	
Q.A. LAST LEVEL CHECKED	DU
LAST LEVEL MOD THIS TYPICAL	DU
LAST LEVEL BY DESIGNER	DU
CHANGED FROM TYPICAL?	Y

REV 01.24.11 4K ACDCCAR14SII.3

CIRCUIT MODIFICATIONS ARE NOT TO BE MADE WITHOUT AUTHORITY FROM THE OFFICE OF SIGNAL DESIGN

Date: 06/04/14
Des: NBT
Chk: AJA
AFE: 25087

UNION PACIFIC RAILROAD
SWEETWATER, ILLINOIS
SHANGHI LANE
PEORIA SUBDIVISION
Office of AVP Engineering - Signal Omaha, Nebraska

Sh.: 2A
DOT 175477P
MP: 128.66
ID: STL12866.2AX

STL12866.2AX 7/17/2014 8:50:52 AM

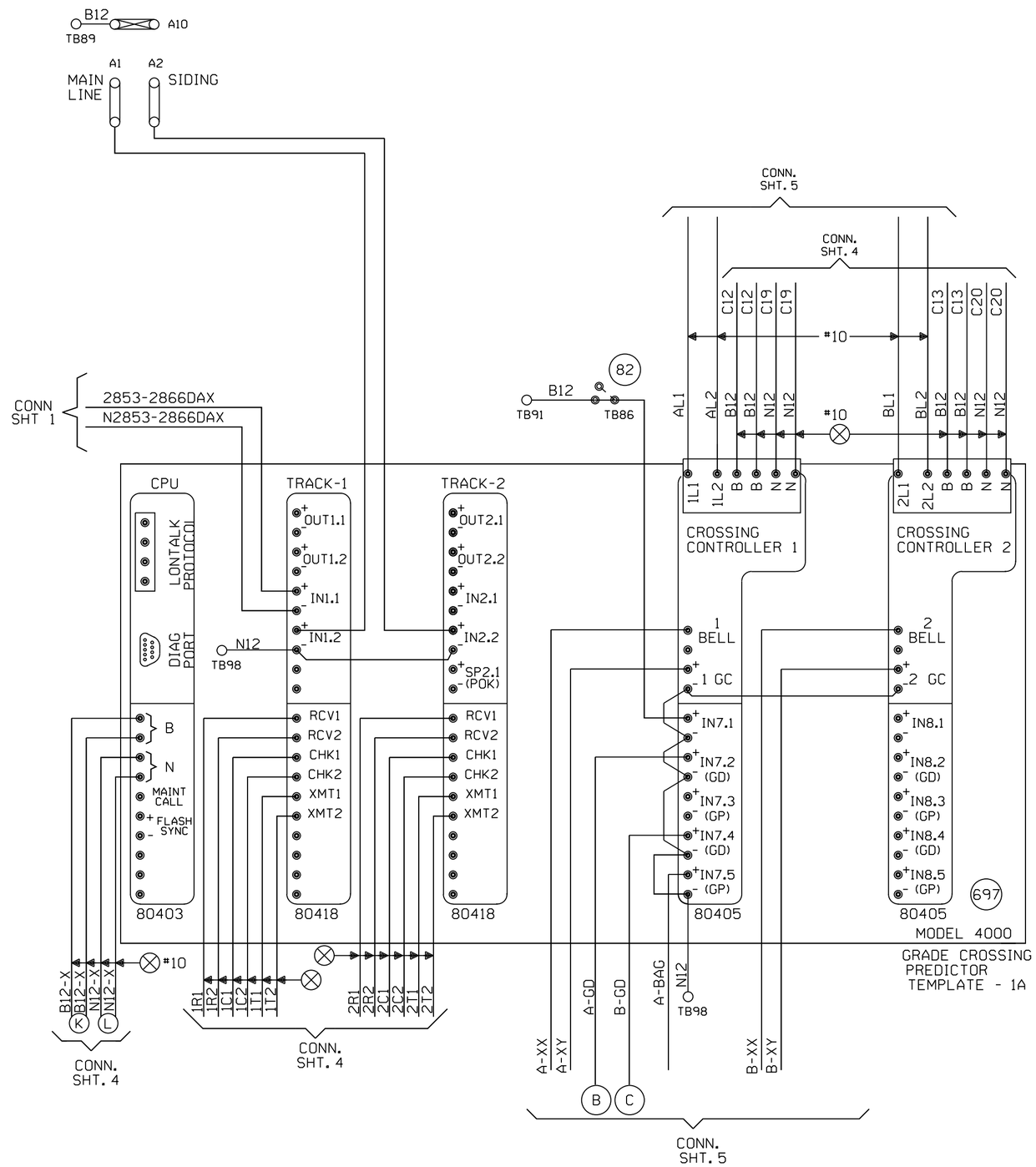

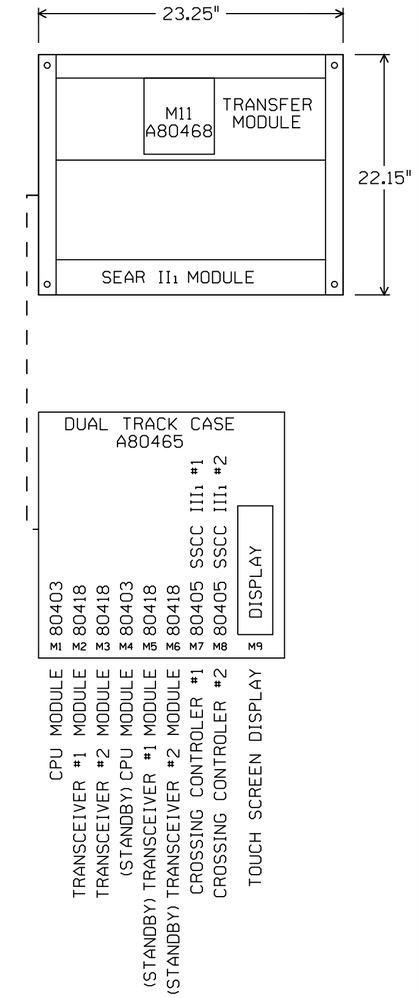

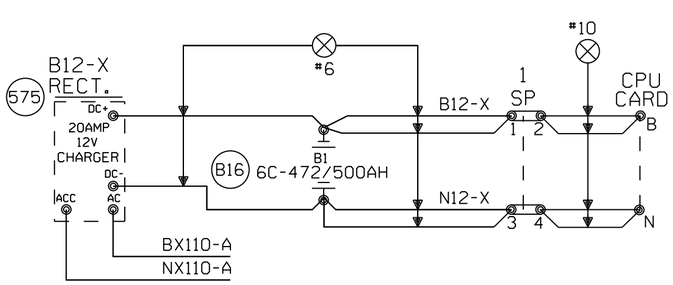

"Mf" FREQUENCY (HZ)	MAXIMUM TRANSMIT WIRE LENGTH (FEET)
86	100
114	125
156	150
211	200
285-970	250

NOTE:
EACH TRANSMITTER TO RAIL WIRE FROM XMT1 AND XMT2 MUST NOT EXCEED THE MAXIMUM LENGTH SPECIFIED IN THE TABLE SHOWN. THE RECEIVER WIRE LENGTH IS NOT CRITICAL. DOES NOT APPLY TO 6 TRACK WIRE APPLICATION.

NEW SHEET

Designed: 06/04/14
INSTALL FLASHERS WITH GATES AND CWT. M.P.128.66 SHANGHI LANE
Rec*: WO*: 25087
IS: /AJA
/NBT/JTB

MODIFICATION LEVEL	
O.A. LAST LEVEL CHECKED	DU
LAST LEVEL MOD THIS TYPICAL	DU
LAST LEVEL BY DESIGNER	DU
CHANGED FROM TYPICAL?	Y

REV 01.24.11 4K 2TKGF.3

CIRCUIT MODIFICATIONS ARE NOT TO BE MADE WITHOUT AUTHORITY FROM THE OFFICE OF SIGNAL DESIGN

Date: 06/04/14
Des: NBT
Chk: AJA
AFE: 25087

UNION PACIFIC RAILROAD
SWEETWATER, ILLINOIS
SHANGHI LANE
PEORIA SUBDIVISION
Office of AVP Engineering - Signal Omaha, Nebraska

Sh.: 3
DOT 175477P
MP: 128.66
ID: STL12866.3X

STL12866.3X 7/17/2014 8:50:45 AM

Minimum Program Steps Report

Location and SIN

DOT Number: 175477P
Milepost Number: 128.66
Site Name: SWEETWATER, IL

SIN: 762010010016 *

* Parameter is part of office check number calculation.

MCF and Template Selection

MCF Name: GCP-T6X-02-4.mcf
MCF Revision: 24
MCFCRC: 09FC363B

Template = 1A:6 Trk Bi (OCCN) *

* Parameter is part of office check number calculation.

Minimum Program Steps

TEMPLATE: module configuration
Track 2/RIO 1 Slot = Track (OCCN) *

TEMPLATE: track 1-Bi, Island
Track 1 : GCP Frequency = 525 Hz (Field,TCN)
Track 1 : Approach Distance = 2229 ft (Set in Field,TCN)
Track 1 : Prime Warning Time = 26 sec (OCCN) *
Track 1 : Prime UAX = IP (OCCN) *
Track 1 : Prime UAX Pickup = 15 sec (OCCN) *
Track 1 : GCP Transmit Level = Medium (Set in Field,TCN)
Track 1 : Isl Frequency = 10.0 kHz (Set in Field)

TEMPLATE: track 2-Bi, Island
Track 2 : GCP Frequency = 970 Hz (Field,TCN)
Track 2 : Approach Distance = 455 ft (Set in Field,TCN)
Track 2 : Prime Warning Time = 26 sec (OCCN) *
Track 2 : GCP Transmit Level = Medium (Set in Field,TCN)
Track 2 : Isl Frequency = 8.3 kHz (Set in Field)

TEMPLATE: AND 1 XR
AND 1 Enable Used = Yes (OCCN) *

TEMPLATE: SSCC
SSCC 1 : Lamp Neutral Test = Off (Set in Field)
SSCC 2 : Lamp Neutral Test = Off (Set in Field)

TEMPLATE: OOS
OOS Control = OOS IPs (OCCN) *

TEMPLATE: IP assignment 1
IN 1.1 = T1 Prime UAX (OCCN) *
IN 1.2 = Out Of Service IP 1 (OCCN) *
IN 2.2 = Out Of Service IP 2 (OCCN) *

TEMPLATE: IP assignment SSCC
IN 7.1 = AND 1 XR Enable (OCCN) *

GCP: track 1

Track 1 : Island Distance = 120 ft (Set in Field,TCN)

GCP: track 2
Track 2 : Island Distance = 120 ft (Set in Field,TCN)

ISLAND: track 1
Track 1 : Pickup Delay (2s +) = 2 sec (OCCN) *

ISLAND: track 2
Track 2 : Pickup Delay (2s +) = 2 sec (OCCN) *

ADVANCED: site options
Daylight Savings = Off (Set in Field)

* Parameter is part of office check number calculation.

Check Numbers

Office Check Number: 2E285BA3
Config. Check Number: 63069602
(Based on MCF Revision 24)

Parameters not part of office check number calculation:

Track 1 : GCP Frequency = 525 Hz
Track 1 : Approach Distance = 2229 ft (Set in Field)
Track 1 : GCP Transmit Level = Medium (Set in Field)
Track 1 : Isl Frequency = 10.0 kHz
Track 2 : GCP Frequency = 970 Hz
Track 2 : Approach Distance = 455 ft (Set in Field)
Track 2 : GCP Transmit Level = Medium (Set in Field)
Track 2 : Isl Frequency = 8.3 kHz
SSCC 1 : Lamp Neutral Test = Off (Set in Field)
SSCC 2 : Lamp Neutral Test = Off (Set in Field)
Track 1 : Island Distance = 120 ft (Set in Field)
Track 2 : Island Distance = 120 ft (Set in Field)
Daylight Savings = Off (Set in Field)

Comments

<none>

Configuration Package File

Filename: STL12866_175477P.pac
Path: M:\USER\Engv102_Trimberger\Projects\XING\25087 Shanghi Lane - Peoria\Design\
Date/Time: 7/10/2014 10:11:51

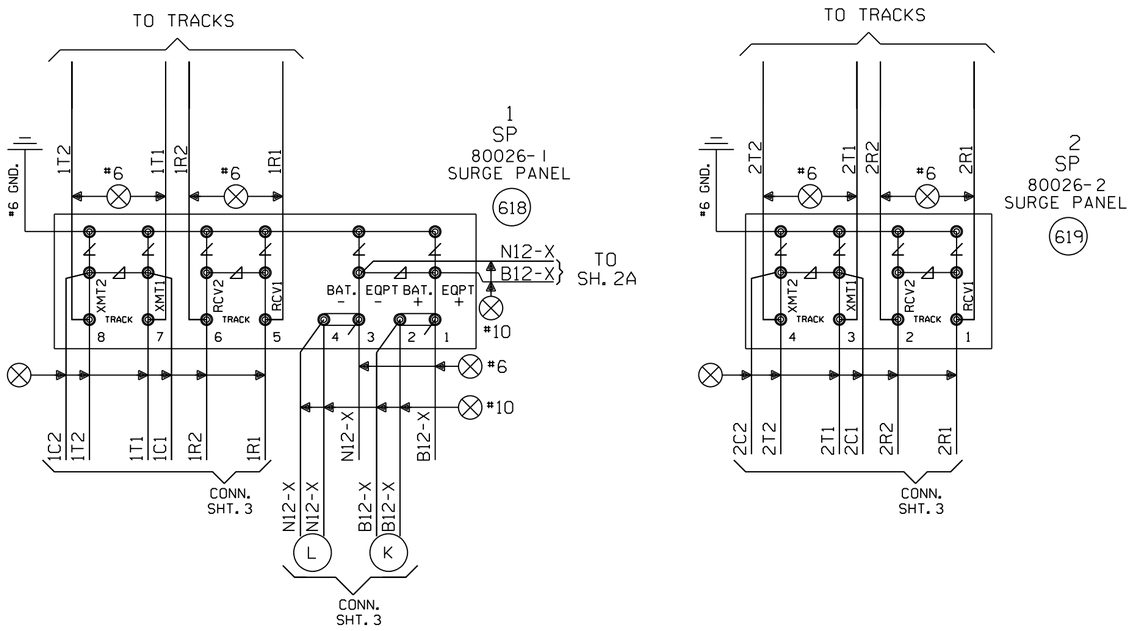

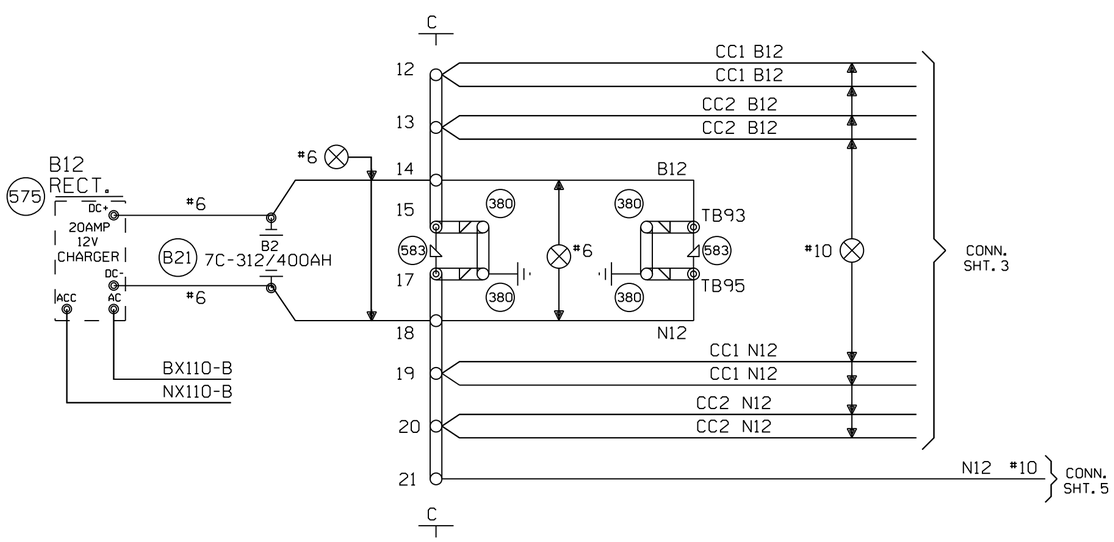

NEW SHEET

					Designed: 06/04/14 INSTALL FLASHERS WITH GATES AND CWT. M.P. 128.66 SHANGHI LANE Rec#: IS: WO#: 25087 /AJA /NBT/JTB	MODIFICATION LEVEL		CIRCUIT MODIFICATIONS ARE NOT TO BE MADE WITHOUT AUTHORITY FROM THE OFFICE OF SIGNAL DESIGN	Date: 06/04/14 Des: NBT Chk: AJA AFE: 25087	UNION PACIFIC RAILROAD SWEETWATER, ILLINOIS SHANGHI LANE PEORIA SUBDIVISION Office of AVP Engineering - Signal Omaha, Nebraska	Sh.: 4 DOT 175477P MP: 128.66 ID: STL12866.4X
						Q.A. LAST LEVEL CHECKED	DU			
						LAST LEVEL MOD THIS TYPICAL	DU			
						LAST LEVEL BY DESIGNER	DU			
						CHANGED FROM TYPICAL? REV 01.24.11 4K 4TKSPGFC.4	Y			

STL12866.4X 7/17/2014 8:50:42 AM

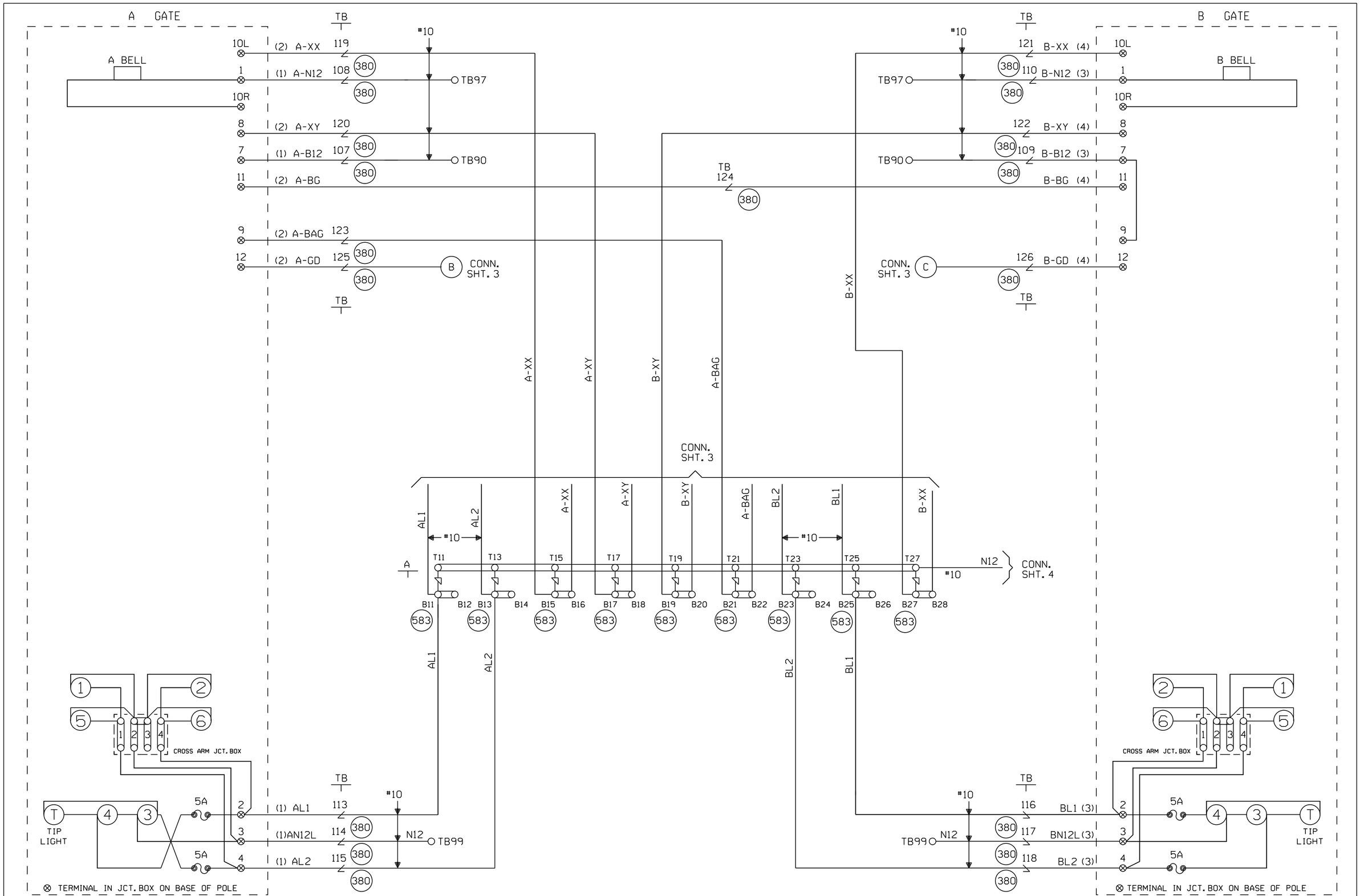

CABLE TABULATION

CABLE NO. 1 5C. NO.6 U.G.B.T. TO GATE A
CABLE NO. 2 7C. NO.14 U.G.B.T. TO GATE A
CABLE NO. 3 5C. NO.6 U.G.B.T. TO GATE B
CABLE NO. 4 7C. NO.14 U.G.B.T. TO GATE B

NEW SHEET

Designed: 06/04/14
INSTALL FLASHERS WITH GATES AND CWT. M.P. 128.66 SHANGHI LANE
Rec#: WO#: 25087
IS: /AJA /NBT/JTB

MODIFICATION LEVEL	
O. A. LAST LEVEL CHECKED	DU
LAST LEVEL MOD THIS TYPICAL	DU
LAST LEVEL BY DESIGNER	DU
CHANGED FROM TYPICAL?	Y

REV 01.24.11 4K GFSLTYP.5

CIRCUIT MODIFICATIONS ARE NOT TO BE MADE WITHOUT AUTHORITY FROM THE OFFICE OF SIGNAL DESIGN

Date: 06/04/14
Des: NBT
Chk: AJA
AFE: 25087

UNION PACIFIC RAILROAD
SWEETWATER, ILLINOIS
SHANGHI LANE
PEORIA SUBDIVISION
Office of AVP Engineering - Signal Omaha, Nebraska

Sh.: 5
DOT 175477P
MP: 128.66
ID: STL12866.5X

STL12866.5X 7/17/2014 8:50:39 AM

WCH 3593-E

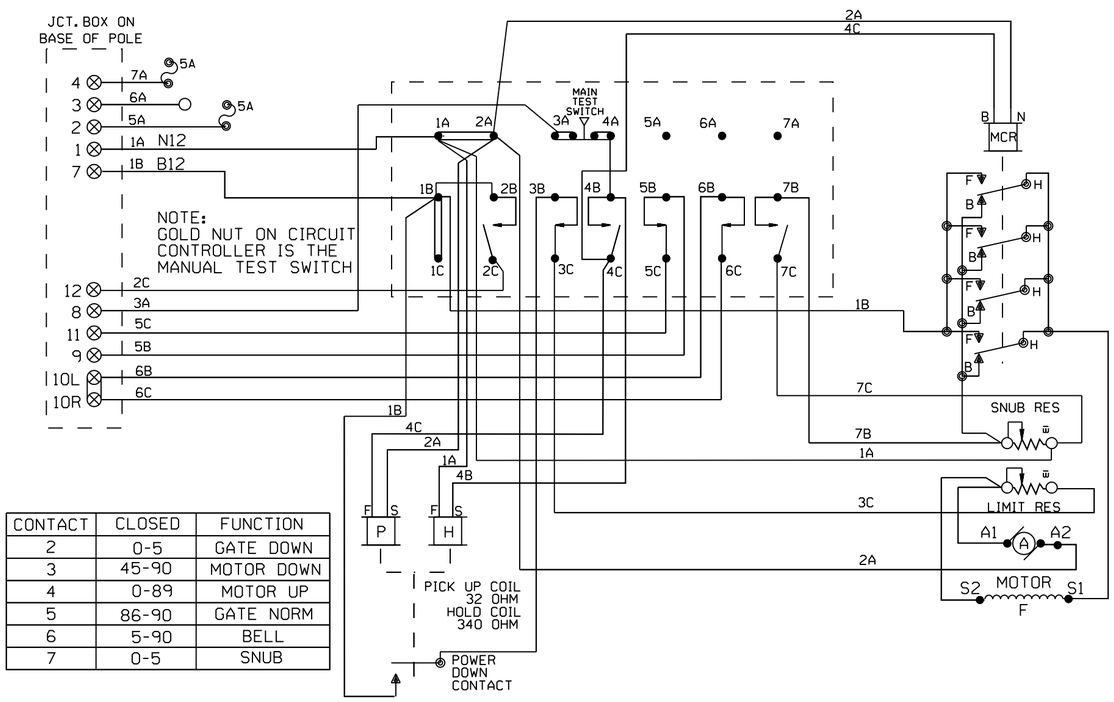

CONTACT	CLOSED	FUNCTION
2	0-5	GATE DOWN
3	45-90	MOTOR DOWN
4	0-89	MOTOR UP
5	86-90	GATE NORM
6	5-90	BELL
7	0-5	SNUB

WCH 3597-E

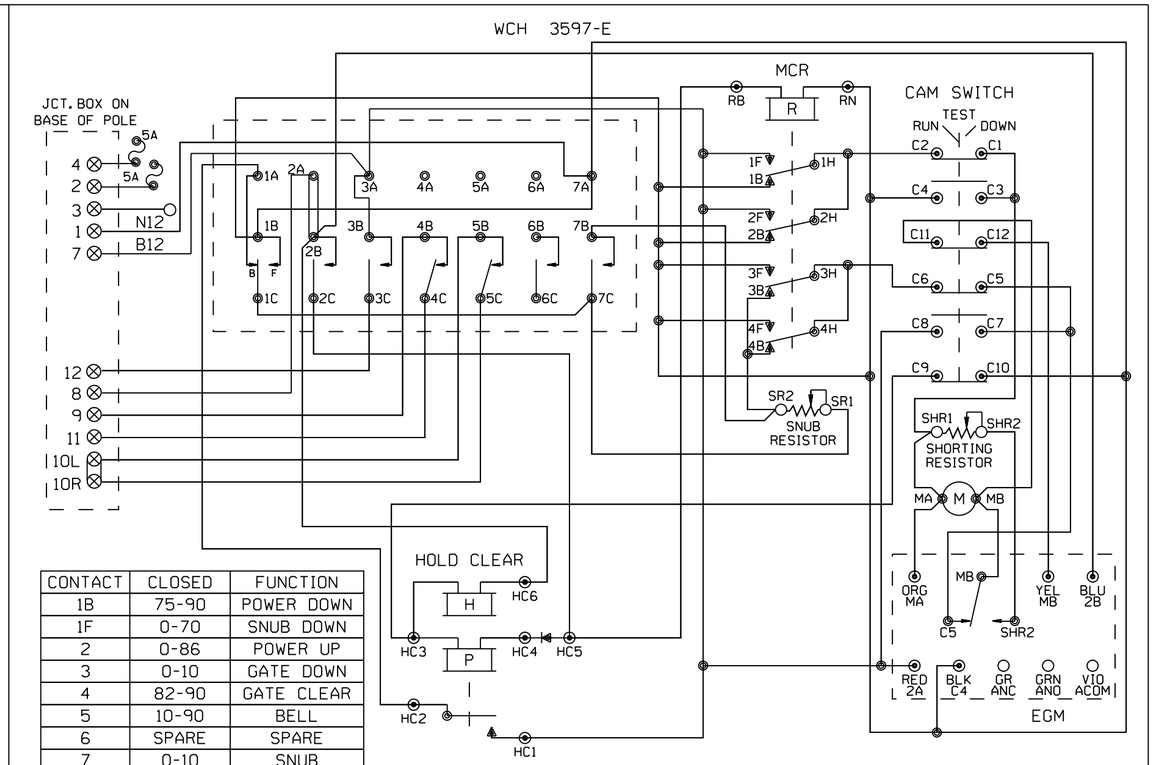

CONTACT	CLOSED	FUNCTION
1B	75-90	POWER DOWN
1F	0-70	SNUB DOWN
2	0-86	POWER UP
3	0-10	GATE DOWN
4	82-90	GATE CLEAR
5	10-90	BELL
6	SPARE	SPARE
7	0-10	SNUB

WCH 3597-RB

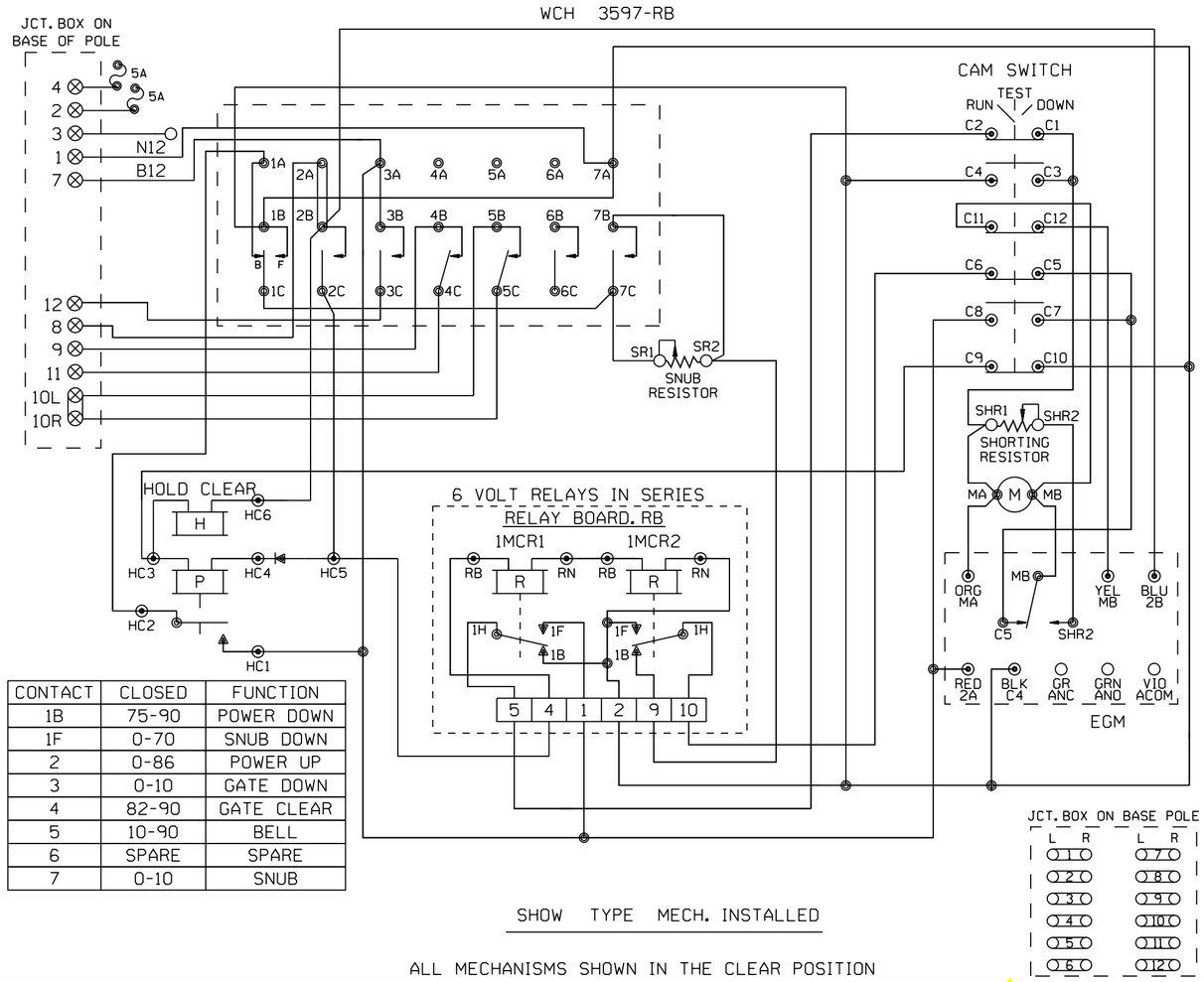

CONTACT	CLOSED	FUNCTION
1B	75-90	POWER DOWN
1F	0-70	SNUB DOWN
2	0-86	POWER UP
3	0-10	GATE DOWN
4	82-90	GATE CLEAR
5	10-90	BELL
6	SPARE	SPARE
7	0-10	SNUB

SHOW TYPE MECH. INSTALLED

ALL MECHANISMS SHOWN IN THE CLEAR POSITION

SAFETRAN S-60

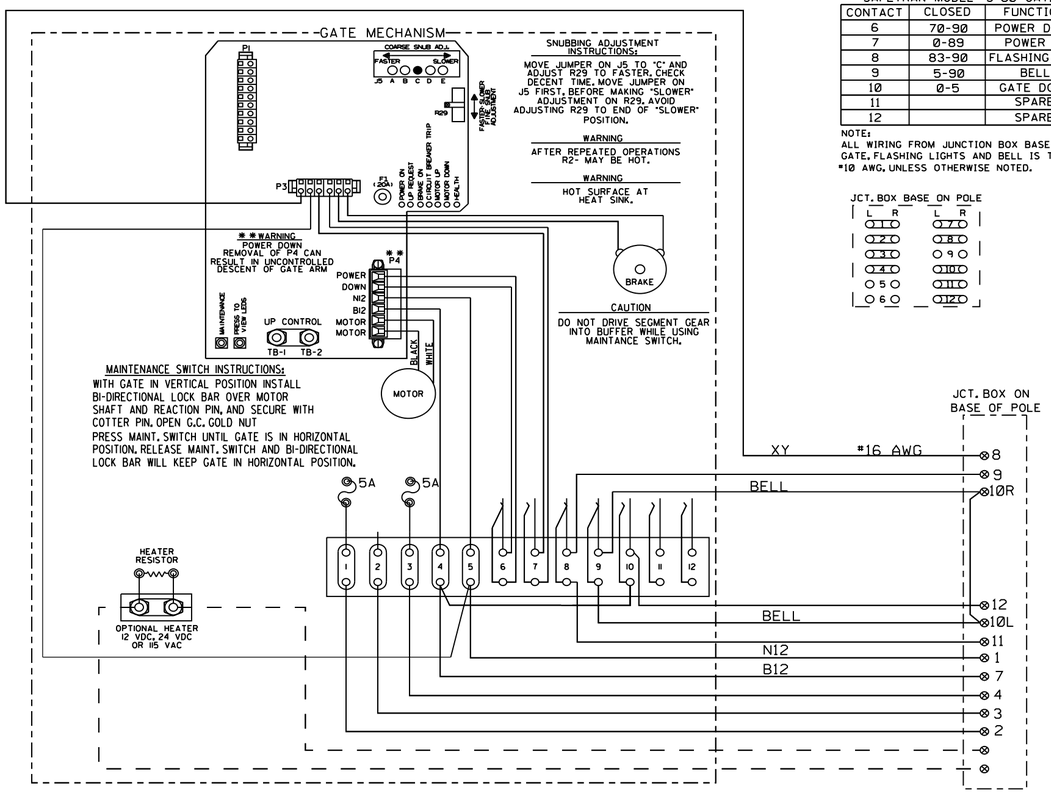

SAFETRAN MODEL "S-60" GATE

CONTACT	CLOSED	FUNCTION
6	70-90	POWER DOWN
7	0-89	POWER UP
8	83-90	FLASHING LGT.
9	5-90	BELL
10	0-5	GATE DOWN
11		SPARE
12		SPARE

NOTE:
ALL WIRING FROM JUNCTION BOX BASE TO GATE, FLASHING LIGHTS AND BELL IS TO BE #10 AWG, UNLESS OTHERWISE NOTED.

JCT. BOX BASE ON POLE

NEW SHEET

Designed: 06/04/14
INSTALL FLASHERS WITH GATES AND CWT.
M.P. 128.66
SHANGHI LANE
Rec#: WO#: 25087
IS: /AJA
/ /NBT/JTB

MODIFICATION LEVEL	
Q.A. LAST LEVEL CHECKED	DU
LAST LEVEL MOD THIS TYPICAL	DU
LAST LEVEL BY DESIGNER	DU
CHANGED FROM TYPICAL?	N

REV 01.24.11 4K GWIRING.7

CIRCUIT MODIFICATIONS ARE NOT TO BE MADE WITHOUT AUTHORITY FROM THE OFFICE OF SIGNAL DESIGN

Date: 06/04/14
Des: NBT
Chk: AJA
AFE: 25087

UNION PACIFIC RAILROAD

SWEETWATER, ILLINOIS
SHANGHI LANE
PEORIA SUBDIVISION

Office of AVP Engineering - Signal Omaha, Nebraska

Sh.: 6
DOT 175477P
MP: 128.66
ID: STL12866.6X

STL12866.6X 7/17/2014 8:50:35 AM

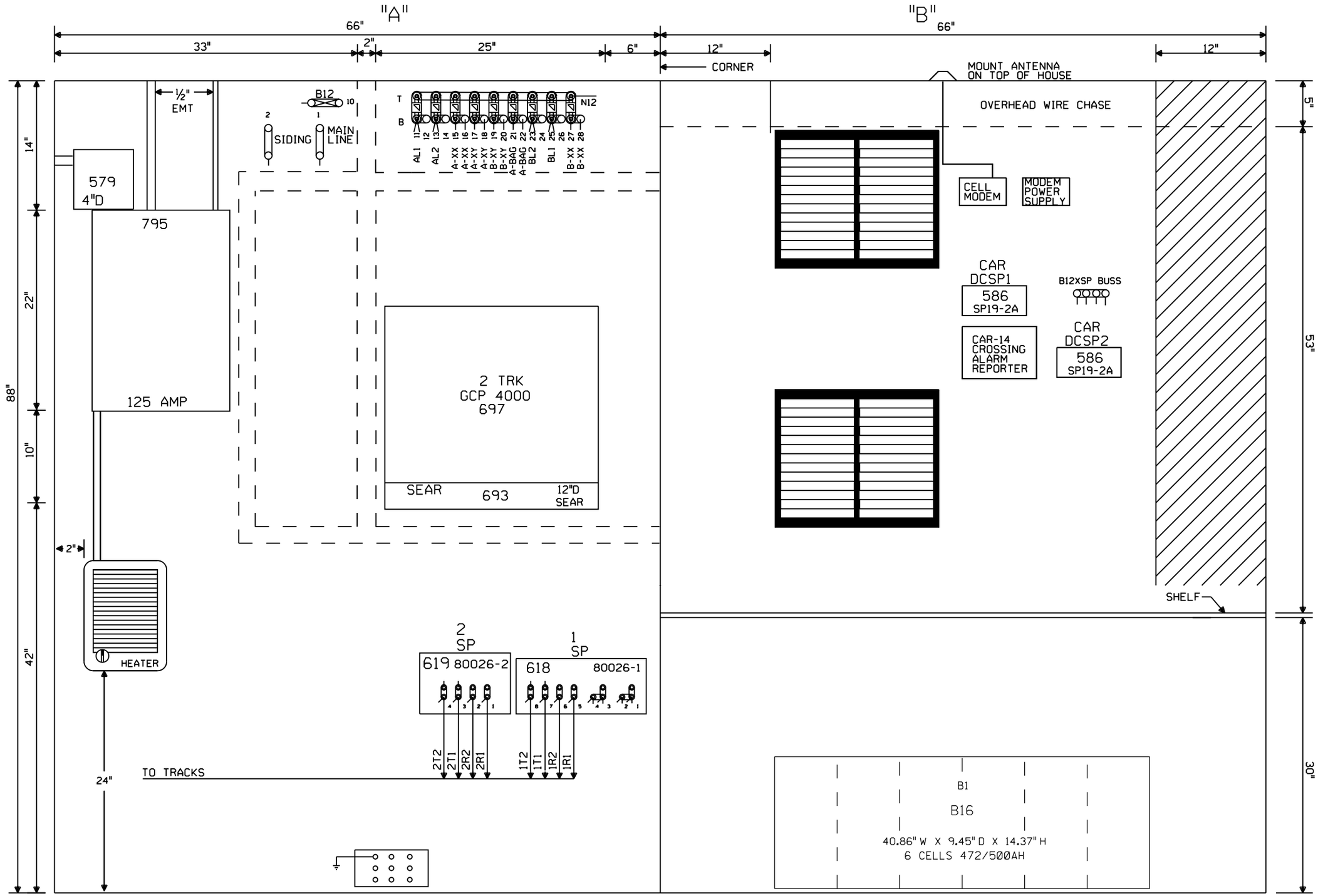

6X6 WAYSIDE/XING HOUSE WITH HEATER AND BLOWER U.P. PART#520-2529

NOTE: ALL DIMENSIONS SHOWN ARE APPROXIMATE.

NEW SHEET

Designed: 06/04/14

INSTALL FLASHERS WITH GATES AND CWT. M.P. 128.66 SHANGHI LANE

Rec#: 15:

WO#: 25087 /AJA /NBT/JTB

MODIFICATION LEVEL	
Q. A. LAST LEVEL CHECKED	DU
LAST LEVEL MOD THIS TYPICAL	DU
LAST LEVEL BY DESIGNER	DU
CHANGED FROM TYPICAL?	Y

REV 01.24.11 4K 4TKGFC.8

CIRCUIT MODIFICATIONS ARE NOT TO BE MADE WITHOUT AUTHORITY FROM THE OFFICE OF SIGNAL DESIGN

Date: 06/04/14
Des: NBT
Chk: AJA
AFE: 25087

UNION PACIFIC RAILROAD

SWEETWATER, ILLINOIS
SHANGHI LANE
PEORIA SUBDIVISION

Office of AVP Engineering - Signal — Omaha, Nebraska

Sh.: 7
DOT 175477P
MP: 128.66
ID: STL12866.7X

STL12866.7X 7/17/2014 8:50:32 AM

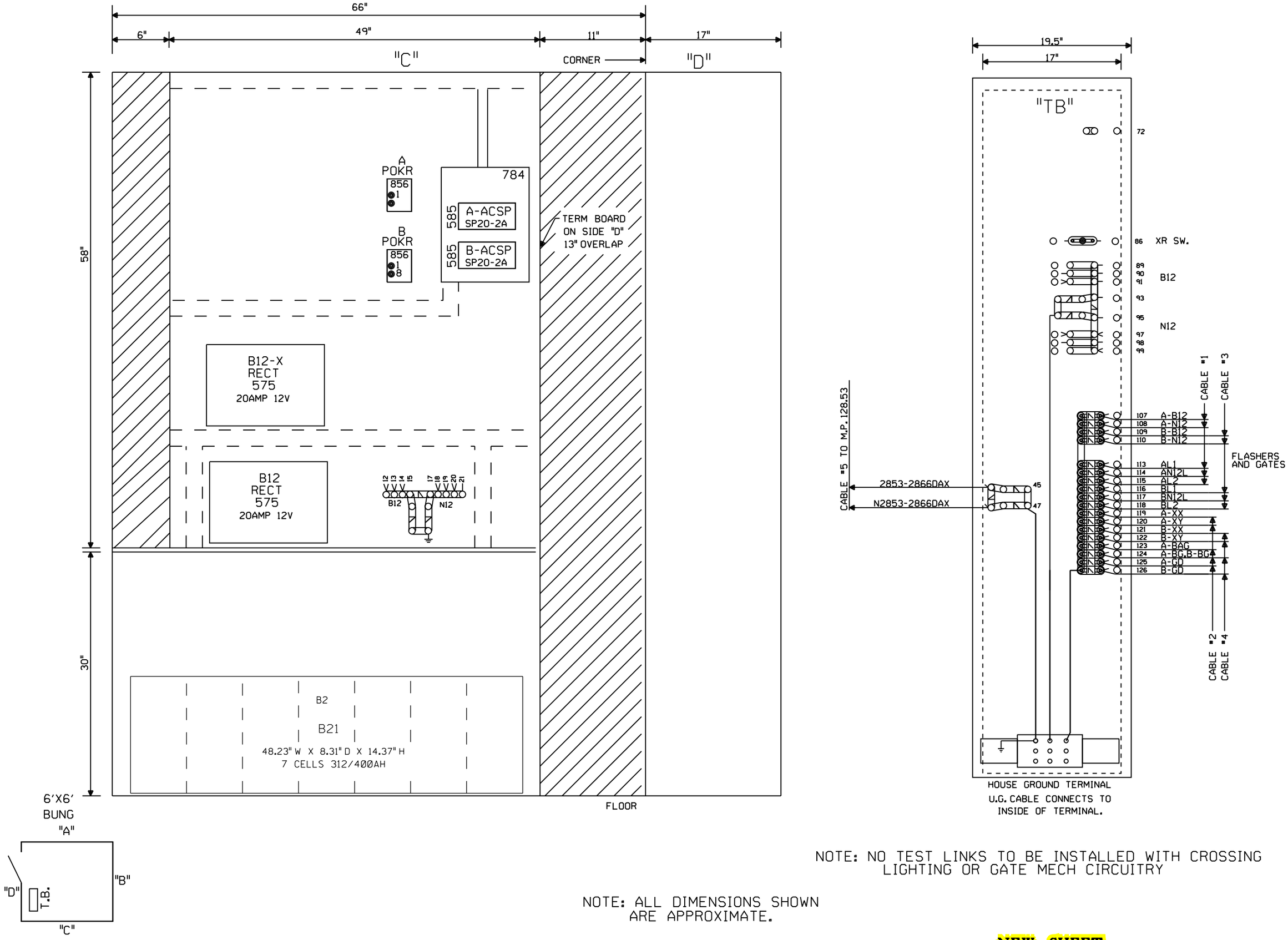

NOTE: NO TEST LINKS TO BE INSTALLED WITH CROSSING LIGHTING OR GATE MECH CIRCUITRY

NOTE: ALL DIMENSIONS SHOWN ARE APPROXIMATE.

NEW SHEET

Designed: 06/04/14 INSTALL FLASHERS WITH GATES AND CWT. M.P. 128.66 SHANGHI LANE Rec#: IS: WO#: 25087 /AJA /NBT/JTB	MODIFICATION LEVEL		CIRCUIT MODIFICATIONS ARE NOT TO BE MADE WITHOUT AUTHORITY FROM THE OFFICE OF SIGNAL DESIGN	Date: 06/04/14 Des: NBT Chk: AJA AFE: 25087	UNION PACIFIC RAILROAD SWEETWATER, ILLINOIS SHANGHI LANE PEORIA SUBDIVISION Office of AVP Engineering - Signal Omaha, Nebraska	Sh.: 8 DOT 175477P MP: 128.66 ID: STL12866.8X
	Q.A. LAST LEVEL CHECKED	DU				
	LAST LEVEL MOD THIS TYPICAL	DU				
	LAST LEVEL BY DESIGNER	DU				
	CHANGED FROM TYPICAL?	Y				
	REV 01.24.11 4K GFC.9					

STL12866.8X 7/17/2014 8:50:28 AM

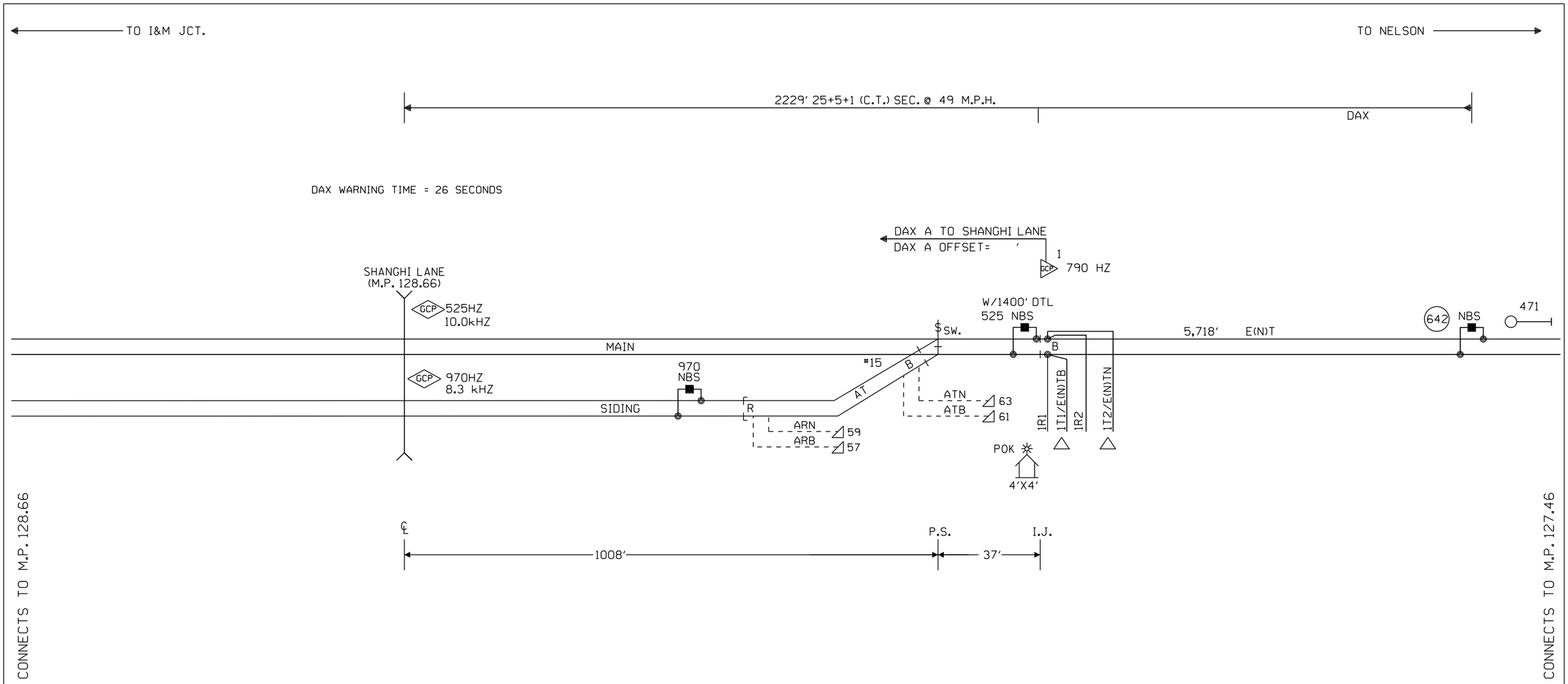

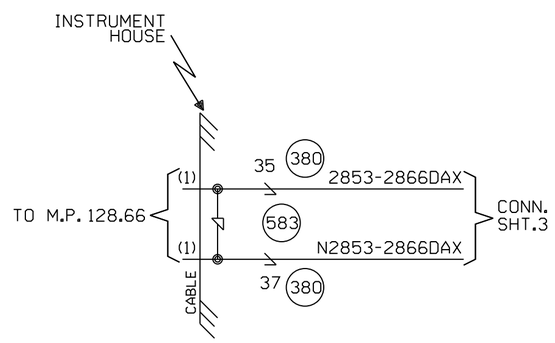

NOTES:

⊗ = TWISTED WIRES
ALL TRACK WIRES 2C. #6
INSULATED 1 TWIST PER FT.

TRANSMITTER AND RECEIVER LEADS
TO BE SEPARATED BY AT LEAST 12" IN TRENCH,
LENGTHS SHOULD NOT EXCEED MANUFACTURES
RECOMMENDATION.

ALL BUNGALOW WIRING TO BE #16 AWG FLEX
UNLESS OTHERWISE SPECIFIED EXCEPT ALL GROUND
WIRE TO BE #6 AWG FLEX OR LARGER.

REFER TO UP STANDARD DWG. FOR BUNGALOW
GROUNDING.

PORTABLE GENERATOR EXTENSION CORD
FOR 240V TO 240V IS PROVIDED AS WELL
AS A 120V TO 240V ADAPTER.

△ = ENSURE TRACK POLARITY IS
TRANSPOSED ACROSS ALL
INSULATED JOINTS.

OFFSET AND ISLAND DISTANCES
TO BE VERIFIED BY FIELD

W(S) ←—○—→ E(N)

CONSTRUCTION NOTES:

1) ORDER AND INSTALL (NOT SHOWN ON THIS SHEET)
- (1) TAB 970 TBES
- (3) TAB 90 RESISTORS
- (1) TAB 706 CHOKE
- (2) TAB 583 EQUALIZERS
- (4) TAB 582 ARRESTORS
- (6) TAB 380 ARRESTORS
- (1) TAB 586 DCSP
- 1100' OF 7C#14 CABLE
- (1) TAB 882 RELAY
- (1) TAB 884 RELAY

2) REUSE EXISTING SWCC AND INSULATED JOINTS
3) REMOVE EXISTING FOULING JUMPERS IN FOULING SECTION OF SIDING TRACK
4) INSTALL NEW METER SERVICE
5) REMOVE EXISTING RING-10/DIODE CIRCUIT LOCATED AT SWITCH
6) REMOVE BATTERY/TRACK DRIVER AT M.P. 127.46

CABLE TABULATION

CABLE #1 7C#14 U.G.B.T. HOUSE TO MP. 128.66
CABLE #2 7C#14 U.G.B.T. HOUSE TO SPRING SWITCH

NEW SHEET

Designed: 06/04/14
INSTALL FLASHERS
WITH GATES AND CWT.
M.P. 128.66
SHANGHI LANE
Rec#: WO#: 25087
IS: / /MRN
/ /NBT/JTB

MODIFICATION LEVEL	
Q. A. LAST LEVEL CHECKED	DU
LAST LEVEL MOD THIS TYPICAL	DU
LAST LEVEL BY DESIGNER	DU
CHANGED FROM TYPICAL?	Y

REV 01.24.11 4K REMOTE.1

CIRCUIT MODIFICATIONS ARE NOT TO BE MADE WITHOUT AUTHORITY FROM THE OFFICE OF SIGNAL DESIGN

Date: 06/04/14
Des: NBT
Chk: MRN
AFE: 25087

UNION PACIFIC RAILROAD
SWEETWATER, ILLINOIS
REMOTE LOCATION
PEORIA SUBDIVISION
Office of AVP Engineering - Signal Omaha, Nebraska

Sh.: 1
DOT 000000R
MP: 128.53
ID: STL12853.1X

STL12853.1X 7/17/2014 8:51:14 AM

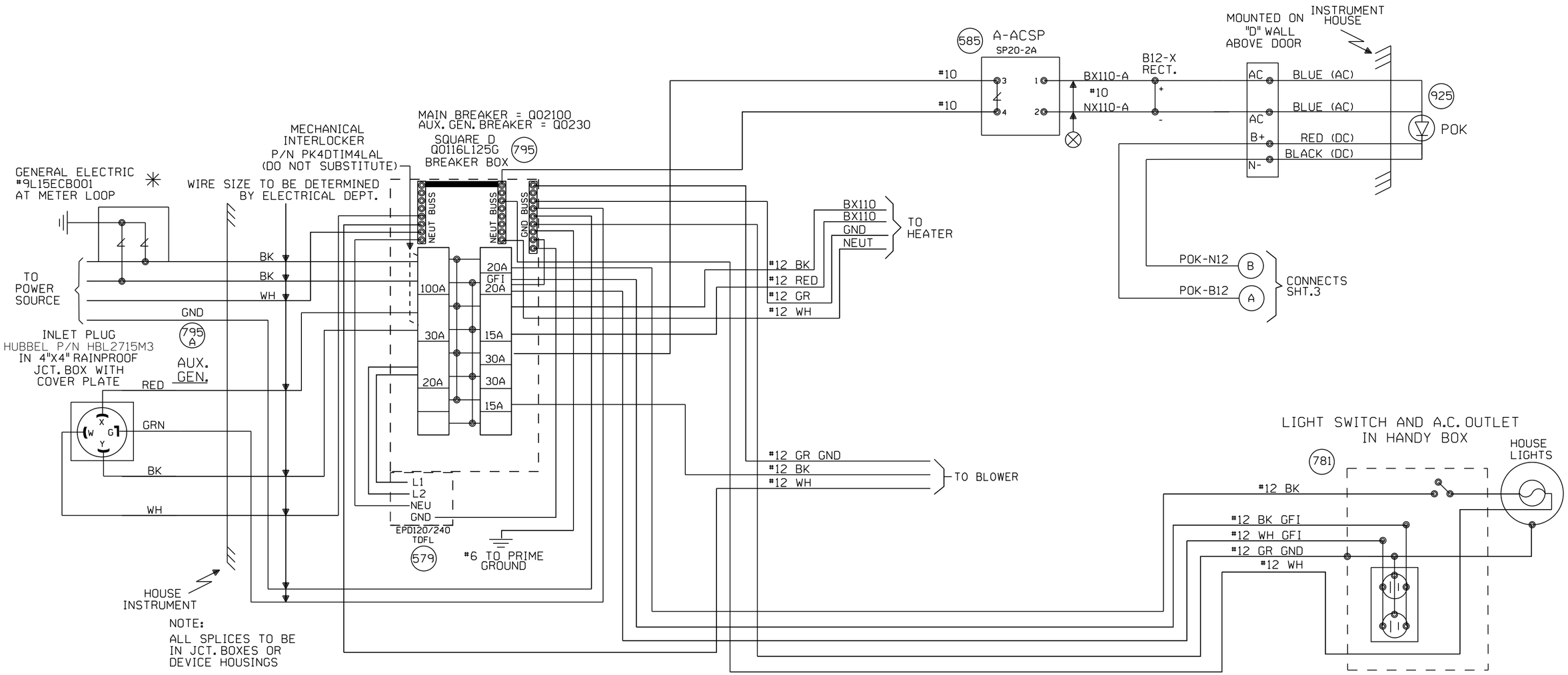

NEW SHEET

Designed: 06/04/14

INSTALL FLASHERS
WITH GATES AND CWT.
M.P. 128.66
SHANGHI LANE

Rec#:
IS:

WO#: 25087
/AJA
/ /NBT/JTB

MODIFICATION LEVEL	
O. A. LAST LEVEL CHECKED	DU
LAST LEVEL MOD THIS TYPICAL	DU
LAST LEVEL BY DESIGNER	DU
CHANGED FROM TYPICAL?	Y

REV 01.24.11 4K SEARAC.2

CIRCUIT MODIFICATIONS ARE NOT TO BE MADE WITHOUT AUTHORITY FROM THE OFFICE OF SIGNAL DESIGN

Date: 06/04/14
Des: NBT
Chk: AJA
AFE: 25087

UNION PACIFIC RAILROAD

SWEETWATER, ILLINOIS
REMOTE LOCATION
PEORIA SUBDIVISION

Office of AVP Engineering - Signal Omaha, Nebraska

Sh.: 2
DOT 000000R
MP: 128.53
ID: STL12853.2X

STL12853.2X 7/17/2014 8:51:10 AM

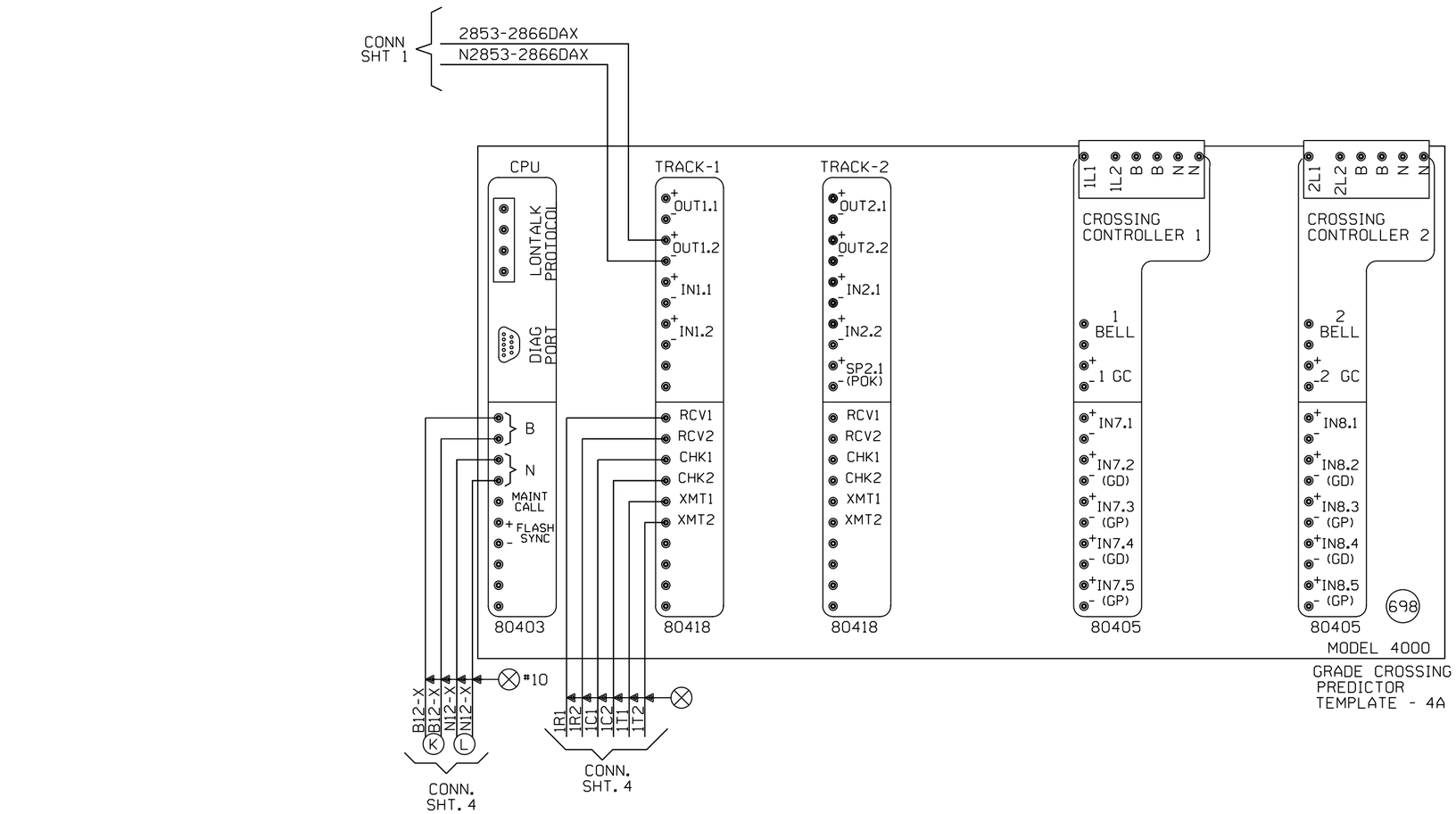

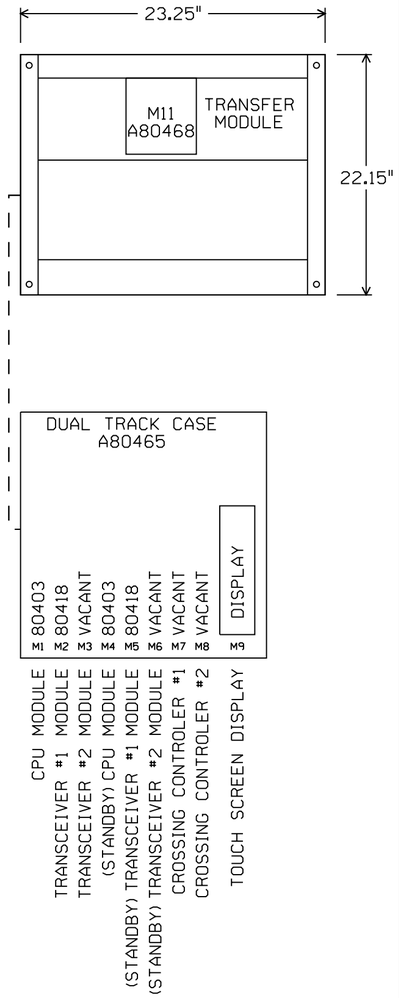

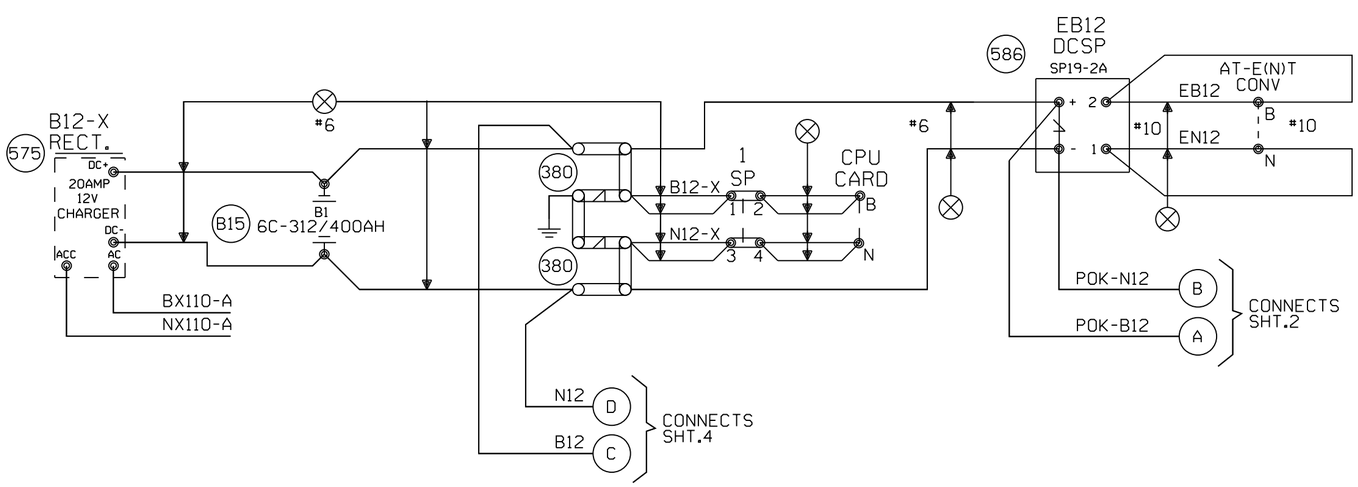

"Mf" FREQUENCY (HZ)	MAXIMUM TRANSMIT WIRE LENGTH (FEET)
86	100
114	125
156	150
211	200
285-970	250

NOTE:
EACH TRANSMITTER TO RAIL WIRE FROM XMT1 AND XMT2 MUST NOT EXCEED THE MAXIMUM LENGTH SPECIFIED IN THE TABLE SHOWN. THE RECEIVER WIRE LENGTH IS NOT CRITICAL. DOES NOT APPLY TO 6 TRACK WIRE APPLICATION.

NEW SHEET

Designed: 06/04/14
INSTALL FLASHERS WITH GATES AND CWT. M.P. 128.66 SHANGHI LANE
Rec*: WO*: 25087
IS: /AJA
/ /NBT/JTB

MODIFICATION LEVEL	
O. A. LAST LEVEL CHECKED	DU
LAST LEVEL MOD THIS TYPICAL	DU
LAST LEVEL BY DESIGNER	DU
CHANGED FROM TYPICAL?	Y

REV 01.24.11 4K 2TKGF.3

CIRCUIT MODIFICATIONS ARE NOT TO BE MADE WITHOUT AUTHORITY FROM THE OFFICE OF SIGNAL DESIGN

Date: 06/04/14
Des: NBT
Chk: AJA
AFE: 25087

UNION PACIFIC RAILROAD
SWEETWATER, ILLINOIS
REMOTE LOCATION
PEORIA SUBDIVISION
Office of AVP Engineering - Signal Omaha, Nebraska

Sh.: 3
DOT 000000R
MP: 128.53
ID: STL12853.3X

STL12853.3X 7/17/2014 8:51:06 AM

Minimum Program Steps Report

Location and SIN

DOT Number: 000000R
Milepost Number: 128.53
Site Name: SWEETWATER, IL

SIN: 762010010016 *

* Parameter is part of office check number calculation.

MCF and Template Selection

MCF Name: GCP-T6X-02-4.mcf
MCF Revision: 24
MCFCRC: 09FC363B

Template = 4A:6 Remotes (OCCN) *

* Parameter is part of office check number calculation.

Minimum Program Steps

TEMPLATE: track 1-Remote Dax
Track 1 : GCP Frequency = 790 Hz (Field,TCN)
Track 1 : Approach Distance = 1281 ft (Set in Field,TCN)
Track 1 : Dax A Warning Time = 26 sec (OCCN) *
Track 1 : Dax A Offset Distance = 948 ft (Set in Field)
Track 1 : GCP Transmit Level = Medium (Set in Field,TCN)

TEMPLATE: OOS
OOS Timeout = 1 hrs (Set in Field)

TEMPLATE: OP assignment 1
OUT 1.2 = AND 1 XR (OCCN) *

ADVANCED: site options
Daylight Savings = Off (Set in Field)

* Parameter is part of office check number calculation.

Check Numbers

Office Check Number: 343892A2
Config. Check Number: 3A89005E
(Based on MCF Revision 24)

Parameters not part of office check number calculation:

Track 1 : GCP Frequency = 790 Hz
Track 1 : Approach Distance = 1281 ft (Set in Field)
Track 1 : Dax A Offset Distance = 948 ft (Set in Field)
Track 1 : GCP Transmit Level = Medium (Set in Field)
OOS Timeout = 1 hrs (Set in Field)
Daylight Savings = Off (Set in Field)

Comments

<none>

Configuration Package File

Filename: STL12853_000000R.pac
Path: M:\USER\Engv102_Trimberger\Projects\XING\25087 Shanghi Lane - Peoria\Design\
Date/Time: 7/10/2014 9:59:27
DT Version: 5.3.3

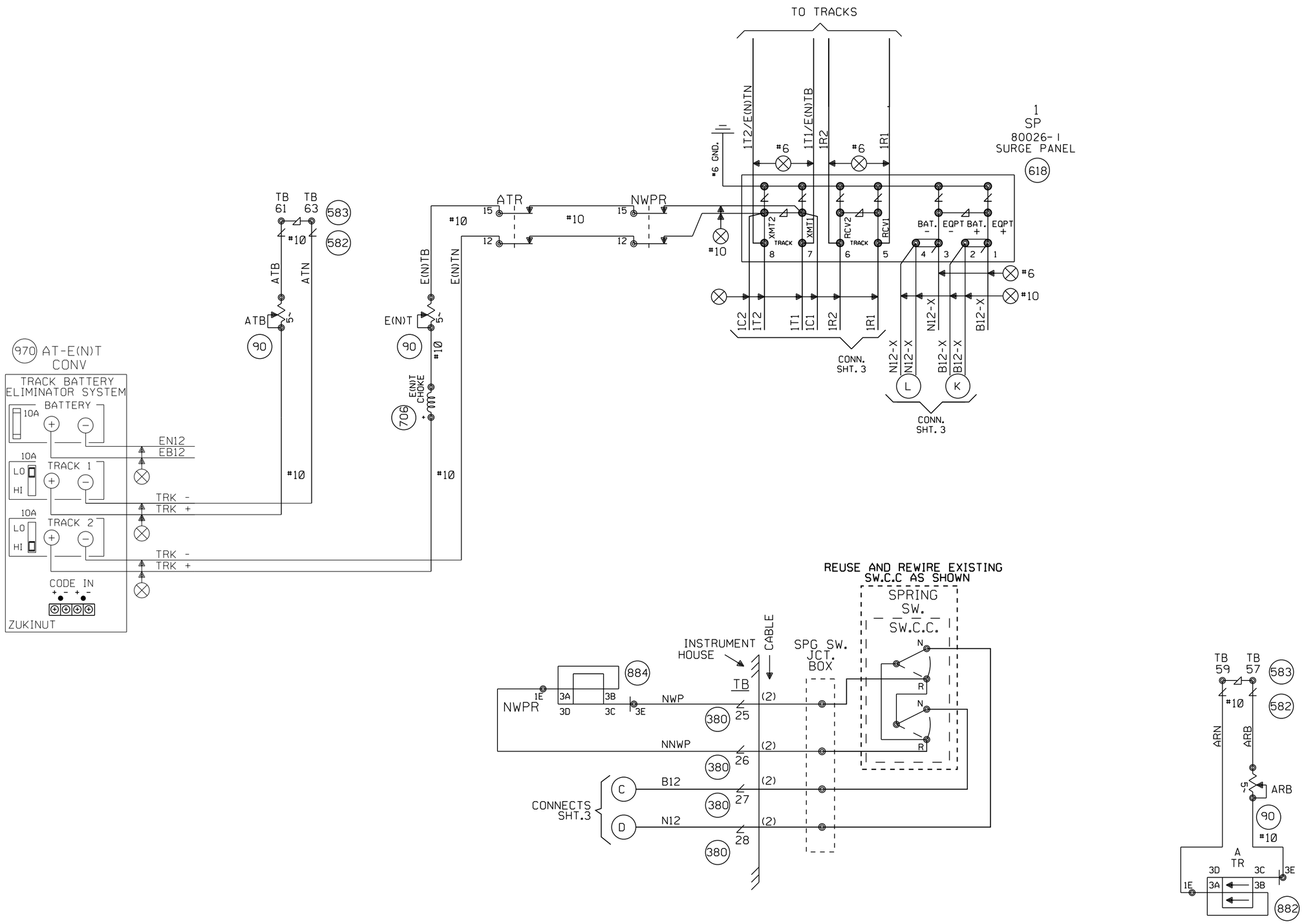

NEW SHEET

Designed: 06/04/14	INSTALL FLASHERS WITH GATES AND CWT. M.P. 128.66 SHANGHI LANE
Rec*:	WO*: 25087
IS:	/AJA
	/NBT/JTB

MODIFICATION LEVEL	
Q.A. LAST LEVEL CHECKED	DU
LAST LEVEL MOD THIS TYPICAL	DU
LAST LEVEL BY DESIGNER	DU
CHANGED FROM TYPICAL?	Y
REV 01.24.11 4K REMOTE.4	

CIRCUIT MODIFICATIONS ARE NOT TO BE MADE WITHOUT AUTHORITY FROM THE OFFICE OF SIGNAL DESIGN

Date: 06/04/14
Des: NBT
Chk: AJA
AFE: 25087

UNION PACIFIC RAILROAD

SWEETWATER, ILLINOIS
REMOTE LOCATION
PEORIA SUBDIVISION

Office of AVP Engineering - Signal — Omaha, Nebraska

Sh.: 4
DOT 000000R
MP: 128.53
ID: STL12853.4X

STL12853.4X 7/17/2014 8:51:02 AM

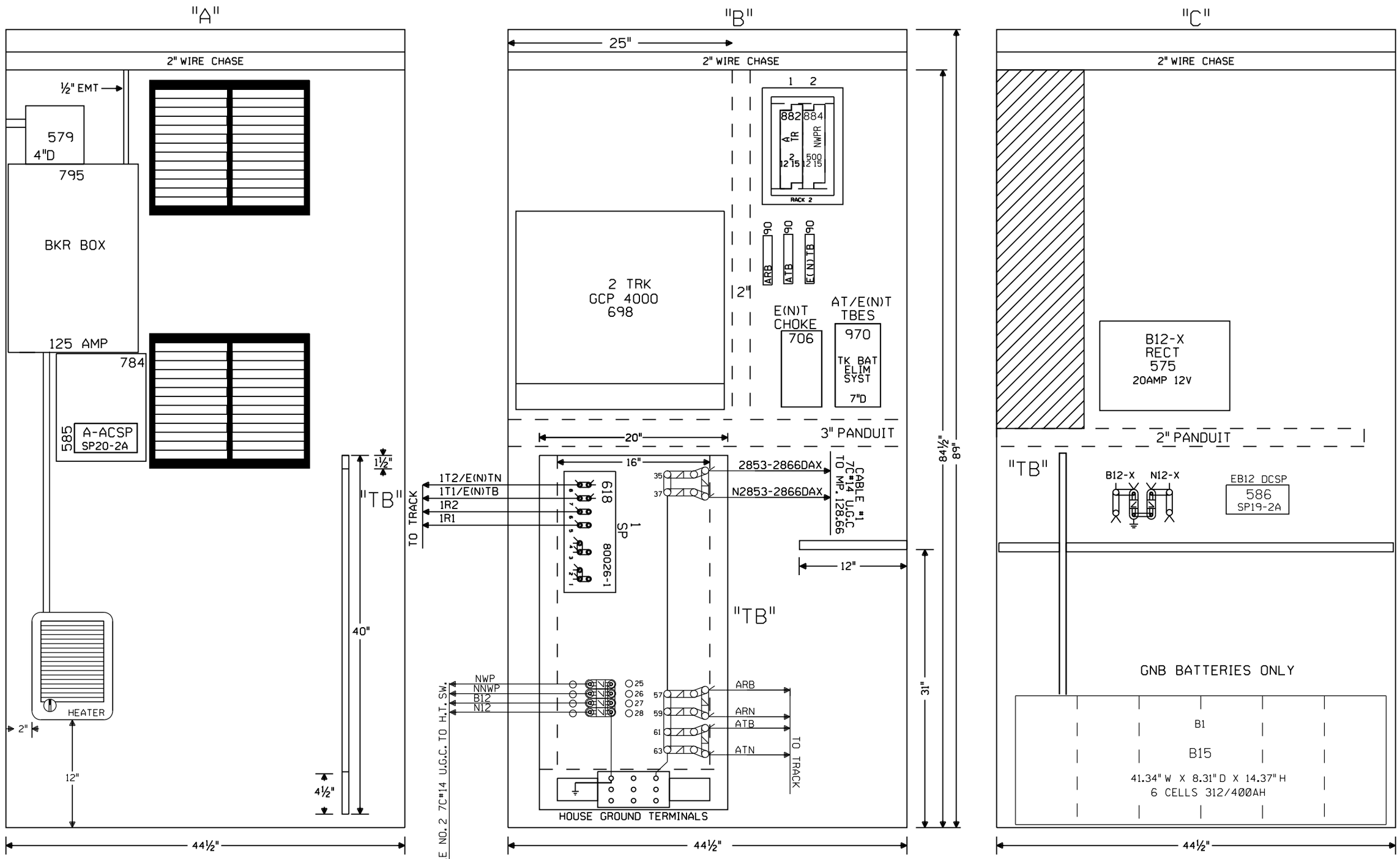

NOTE: ALL DIMENSIONS SHOWN ARE APPROXIMATE.

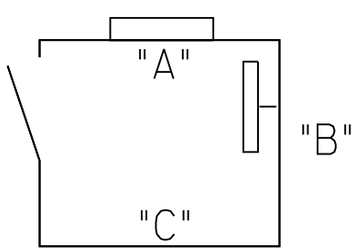

4X4 HOUSE WITH HEATER AND BLOWER U.P. PART#520-2528

NEW SHEET

Designed: 06/04/14
INSTALL FLASHERS WITH GATES AND CWT. M.P. 128.66 SHANGHI LANE
Rec#: 15:
WO#: 25087 /AJA /NBT/JTB

MODIFICATION LEVEL	
O.A. LAST LEVEL CHECKED	DU
LAST LEVEL MOD THIS TYPICAL	DU
LAST LEVEL BY DESIGNER	DU
CHANGED FROM TYPICAL?	Y

REV 01.24.11 4K REMOTE.5

CIRCUIT MODIFICATIONS ARE NOT TO BE MADE WITHOUT AUTHORITY FROM THE OFFICE OF SIGNAL DESIGN

Date: 06/04/14
Des: NBT
Chk: AJA
AFE: 25087

UNION PACIFIC RAILROAD

SWEETWATER, ILLINOIS
REMOTE LOCATION
PEORIA SUBDIVISION

Office of AVP Engineering - Signal Omaha, Nebraska

Sh.: 5
DOT 000000R
MP: 128.53
ID: STL12853.5X

STL12853.5X 7/17/2014 8:50:59 AM