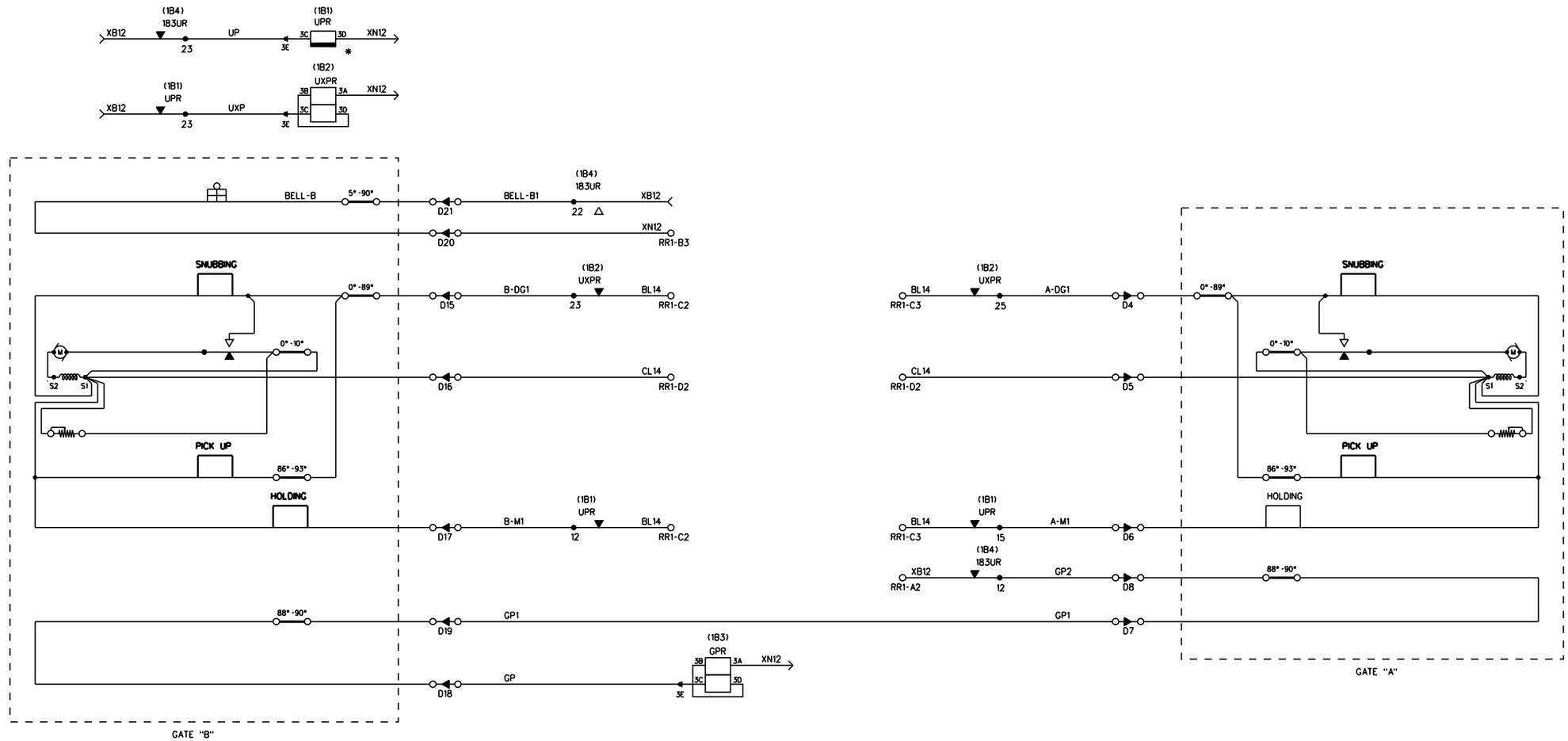

ALL OUT
THIS SHEET IS VOID
WHEN AS IN SERVICED.

CXD1437248 IL2014043
04·25·15 XRL/O.MCIVER/

xorail

REVISIONS
08·12·96 NST
09·25·14 XRL IL2010010, IL2014028

CSX TRANSPORTATION
RAIL TRANSPORT GROUP ENGINEERING
COMMUNICATIONS AND SIGNALS

SIGNALS 293/294/295/296

183RD ST 283191T
GATE CIRCUITS
LANSING, IL M.P. DG·29.42

DESIGNED	DIGITIZED	CHECKED	DATE
XRL	XRL	CSX	09·25·14

DRAWING	SHEET NO	NEXT SH	NEXT FILE	NEXT SH	FILE	SHEET
.....	.....	.....	DG02941	C10	DG02941	C09

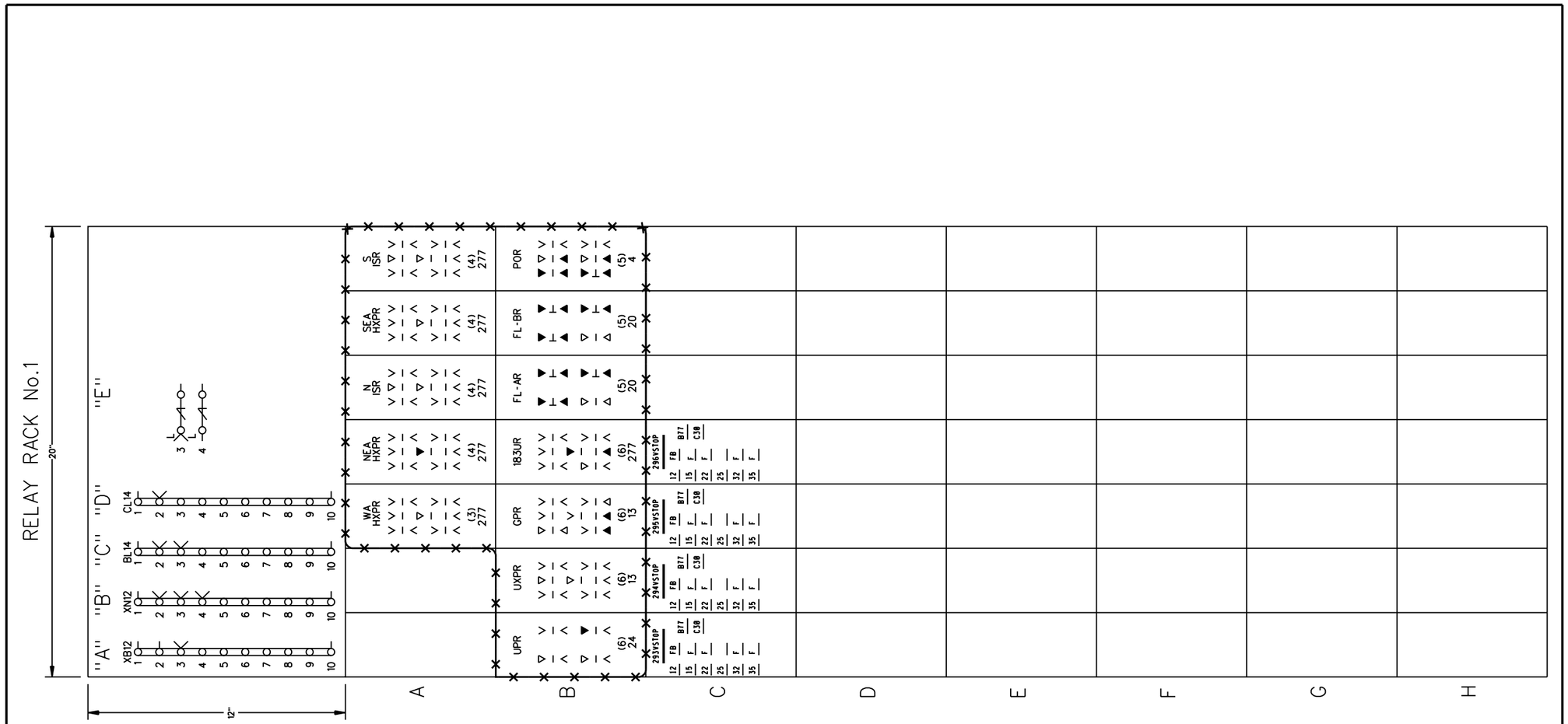

: IN
: OUT

CXD1437248 IL2014043
04-25-15 XRL/O.MCIVER/

xorail

REVISIONS	
08-12-96 NST	
09-25-14 XRL	IL2010010, IL2014028

CSX TRANSPORTATION
RAIL TRANSPORT GROUP ENGINEERING
COMMUNICATIONS AND SIGNALS

SIGNALS 293/294/295/296 &

D186TH X183RD ST 283191T
RELAY RACK #1 LAYOUT
LANSING, IL M.P. DG-29.41

DESIGNED	DIGITIZED	CHECKED	DATE
XRL	XRL	CSX	09-25-14

DRAWING	SHEET NO	NEXT SH	NEXT FILE	NEXT SH	FILE	SHEET
.....	.....	.....	DG02941	X C11 D C07	DG02941	X C10 D C06

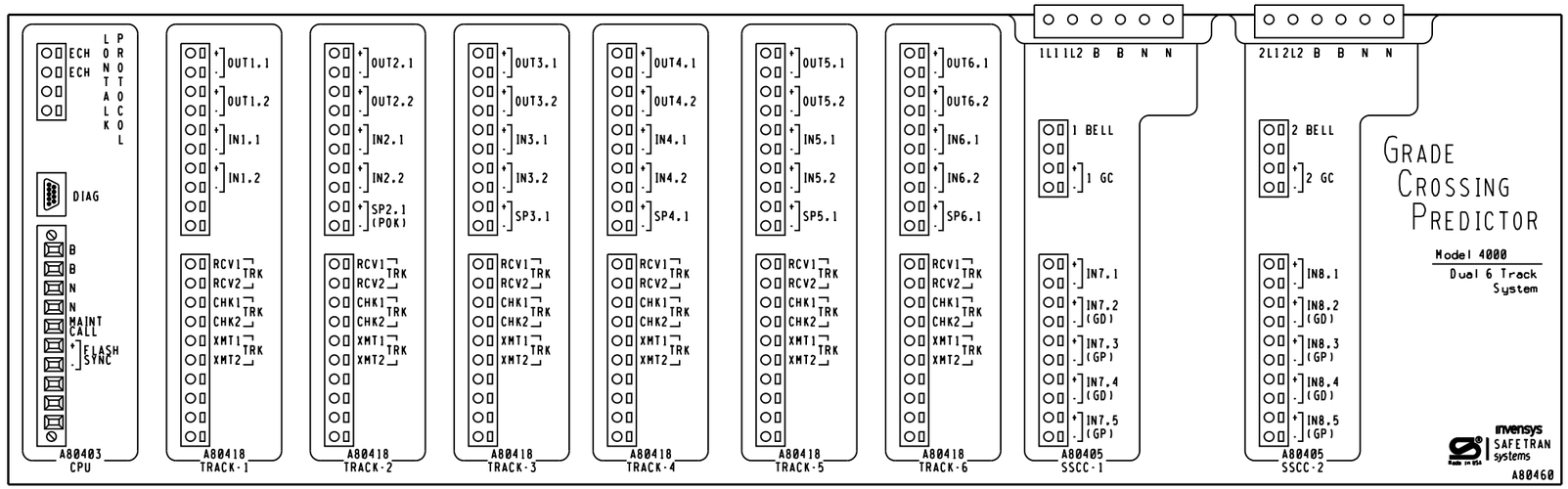

✕✕✕ : OUT

NEW WORK

CXD1437248 IL2014043

04-25-15 XRL/O.MCIVER/

xorail

6'X6' PTC CROSSING HOUSE

REVISIONS						
			CSX TRANSPORTATION RAIL TRANSPORT GROUP ENGINEERING COMMUNICATIONS AND SIGNALS			
			SIGNALS 293/294/295/296 ↓ 186TH ST 283191T DETECTION DEVICE CONSIST CWE-42 LANSING, IL M.P. DG-29.41			
			DESIGNED XRL	DIGITIZED XRL	CHECKED XRL	DATE 04-25-15
DRAWING	SHEET NO	NEXT SH	NEXT FILE DG02941	NEXT SH C11	FILE DG02941	SHEET C10 A

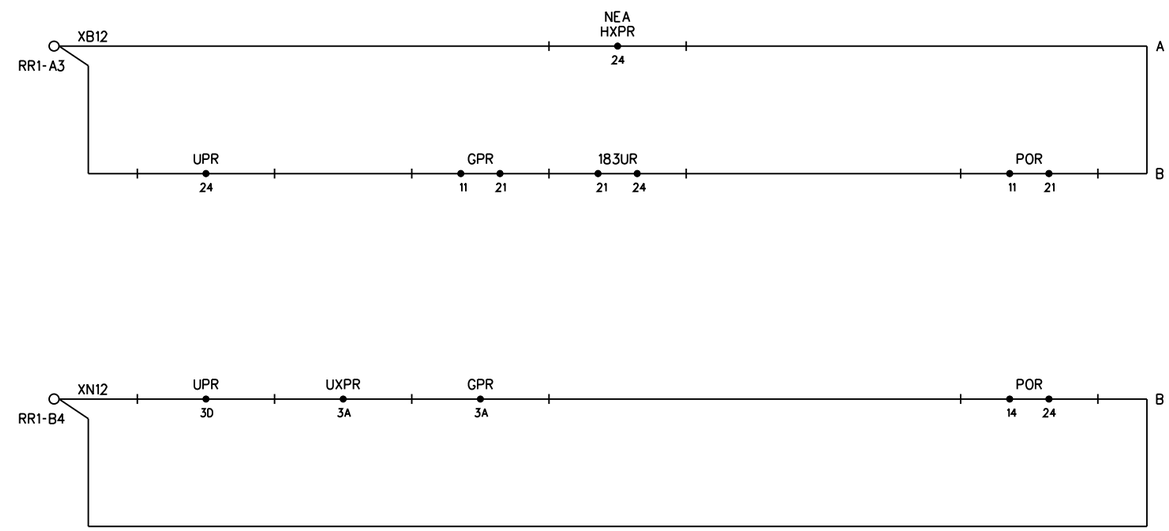

ALL OUT
THIS SHEET IS VOID
WHEN AS IN SERVICED.

CXD1437248 IL2014043
04-25-15 XRL/O.MCIVER/

xorail

NOTE:
ALL LOOPS TO BE #14 WIRE.

REVISIONS	
08-12-96 NST	
09-25-14 XRL	IL2010010, IL2014028

CSX TRANSPORTATION
RAIL TRANSPORT GROUP ENGINEERING
COMMUNICATIONS AND SIGNALS

SIGNALS 293/294/295/296
183RD ST 283191T
ENERGY LOOP DIAGRAM RELAY RACK #1
LANSING, IL M.P. DG-29.42

DESIGNED	DIGITIZED	CHECKED	DATE
XRL	XRL	CSX	09-25-14

DRAWING	SHEET NO	NEXT SH	NEXT FILE	NEXT SH	FILE	SHEET
.....	.....	.....	DG02941	C12	DG02941	C11

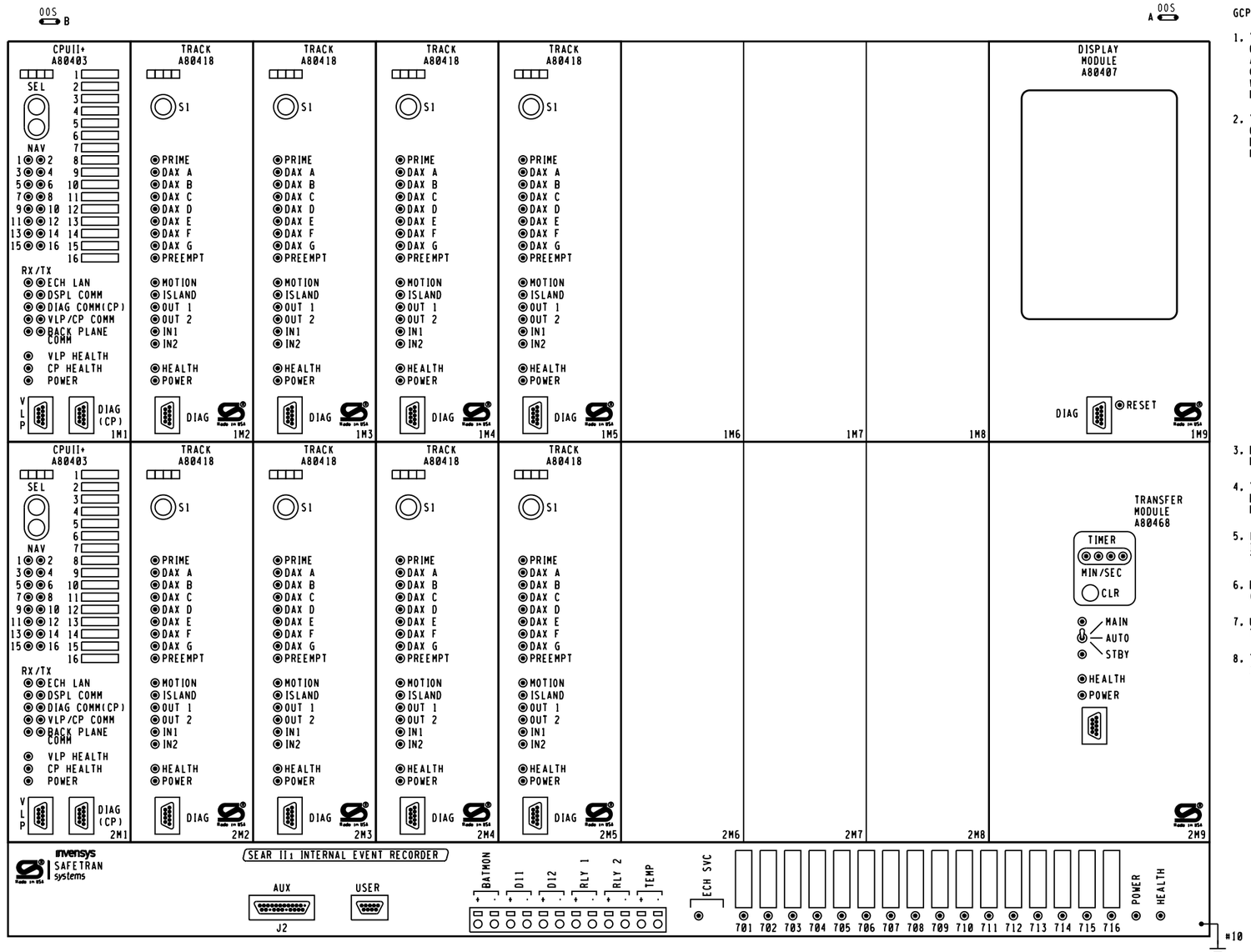

GCP 4000 APPLICATION NOTES:

1. THE GRADE CROSSING PREDICTOR (GCP) IS A MODULAR MICROPROCESSOR CONTROLLED SYSTEM THAT IS DEPLOYED TO CONTINUALLY MONITOR THE APPROACHES TO RAILROAD GRADE CROSSINGS AND TO CONTROL THE LAMPS, GATES AND BELLS ASSOCIATED WITH THOSE CROSSINGS. WHEN EQUIPPED WITH THE SEAR II: MODULE THE GCP 4000 WILL RECORD EVENTS AND REPORT ALARMS WHEN CONNECTED TO AN OFFICE SYSTEM.

2. THE GCP 4000 GCP (A80460) IS A SIX TRACK REDUNDANT UNIT CAPABLE OF DRIVING 4 INDEPENDENT FLASHER AND GATE SIGNALS AND RECORDING EVENTS AND REPORTING ALARMS. THIS A80460 INCLUDES THE FOLLOWING MODULES:

SLOT	MODULE	FUNCTION	PART NO.
1M1	CPU-II+	MAIN	A80403
1M2	TRACK-1	MAIN	A80418
1M3	TRACK-2	MAIN	A80418
1M4	TRACK-3	MAIN	A80418
1M5	TRACK-4	MAIN	A80418
1M6			
1M7			
1M8			
1M9	DISPLAY MODULE		A80407
2M1	CPU-II+	STANDBY	A80403
2M2	TRACK-1	STANDBY	A80418
2M3	TRACK-2	STANDBY	A80418
2M4	TRACK-3	STANDBY	A80418
2M5	TRACK-4	STANDBY	A80418
2M6			
2M7			
2M8			
2M9	TRANSFER UNIT		A80406
LOWER BAY	SEAR II:	RECORDER	A80410

3. EACH TRACK MODULE HAS TWO PROGRAMMABLE INPUTS AND TWO PROGRAMABLE OUTPUTS.

4. THE SEAR II: INTERNAL EVENT RECORDER HAS INPUTS FOR ONE BATTERY MONITOR, TWO NON-VITAL INPUTS AND TWO PROGRAMMABLE RELAY DRIVES (HEEL/FRONT).

5. LOCATED ON THE FRONT OF EACH MODULE THERE ARE LED LIGHTS TO INDICATE THE ACTIVITY OF CERTAIN FUNCTIONS OCCURRING INSIDE THE GCP.

6. BETWEEN SLOT 1 & 2 THERE IS A CHASSIS IDENTIFICATION CHIP (CIC) SOCKET AND AN ECD CONNECTOR (DB-25 FEMALE).

7. UPON THE FAILURE OF A MODULE IN SLOTS 1M1-1M7 THE AUTOMATIC TRANSFER UNIT SWITCHES TO THE STANDBY MODULES IN SLOTS 2M1-2M7.

8. THE GCP 4000 GCP (A80460) MAY USE RIO MODULES IN SLOTS 1M3, 1M6, 1M7, 2M3, 2M6 AND 2M7.

XXX = OUT

NEW WORK

CXD1437248 IL2014043

04-25-15 XRL/O.MCIVER/

xorail

6'X6' PTC CROSSING HOUSE

REVISIONS	CSX TRANSPORTATION RAIL TRANSPORT GROUP ENGINEERING COMMUNICATIONS AND SIGNALS
	SIGNALS 293/294/295/296 & 186TH ST 283191T DETECTION DEVICE CONSIST CWE-42 LANSING, IL M.P. DG-29.41

DESIGNED	DIGITIZED	CHECKED	DATE
XRL	XRL	XRL	04-25-15

DRAWING	SHEET NO	NEXT SH	NEXT FILE	NEXT SH	FILE	SHEET
.....	.....	.....	DG02941	C12	DG02941	C11 A

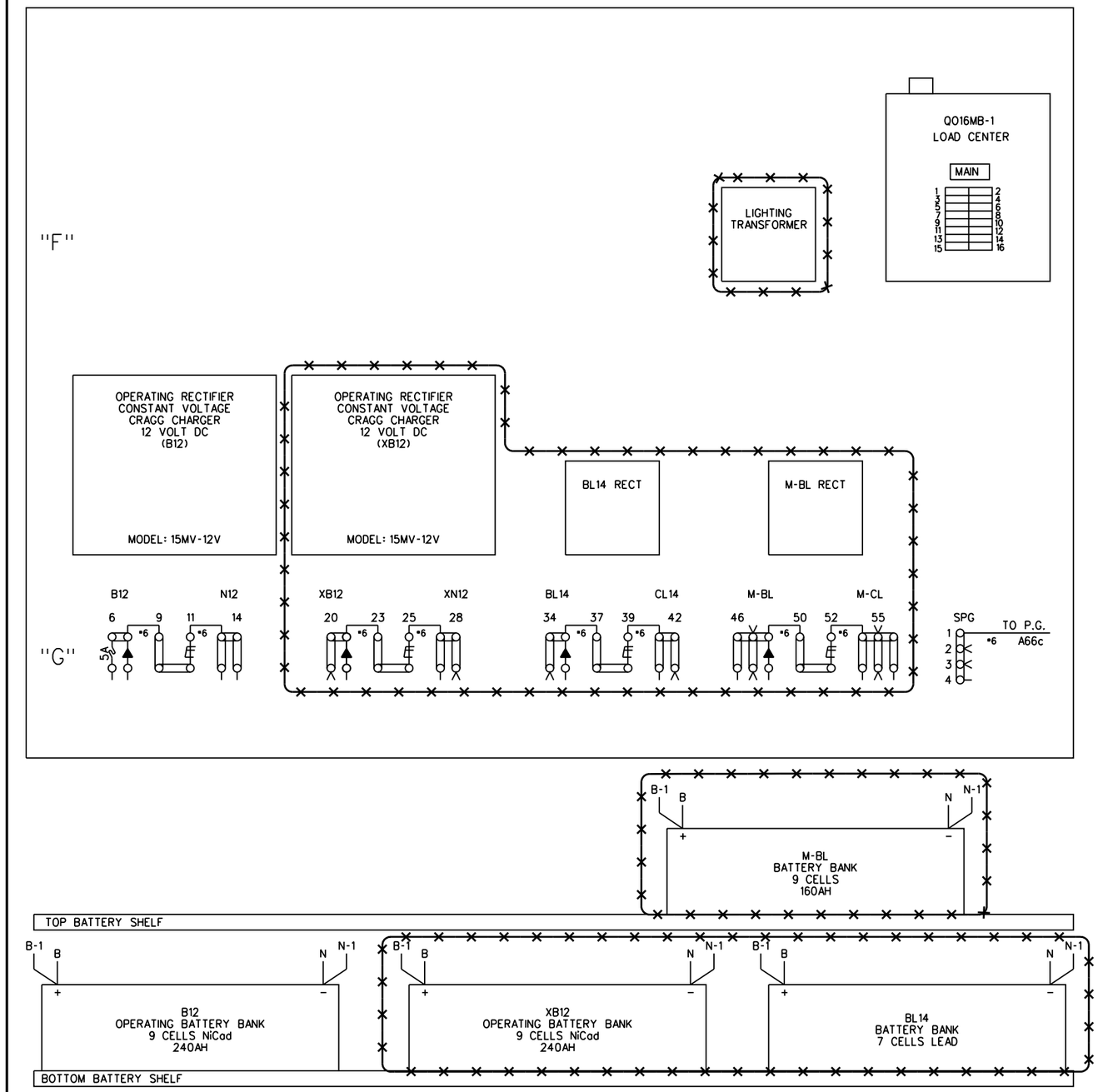

= IN
= OUT

CXD1437248
04·25·15

IL2014043
XRL/O.MCIVER/

xorail

REVISIONS	
08·12·96 NST	
09·25·14 XRL	IL2010010, IL2014028

CSX TRANSPORTATION
RAIL TRANSPORT GROUP ENGINEERING
COMMUNICATIONS AND SIGNALS

SIGNALS 293/294/295/296 &

186TH 183RD ST 283191T

POWER WALL LAYOUT

LANSING, IL M.P. DG-29.41

DESIGNED	DIGITIZED	CHECKED	DATE
XRL	XRL	CSX	09·25·14

DRAWING	SHEET NO	NEXT SH	NEXT FILE	NEXT SH	FILE	SHEET
.....	.....	.....	DG02941	C13 C08	DG02941	C12 C07

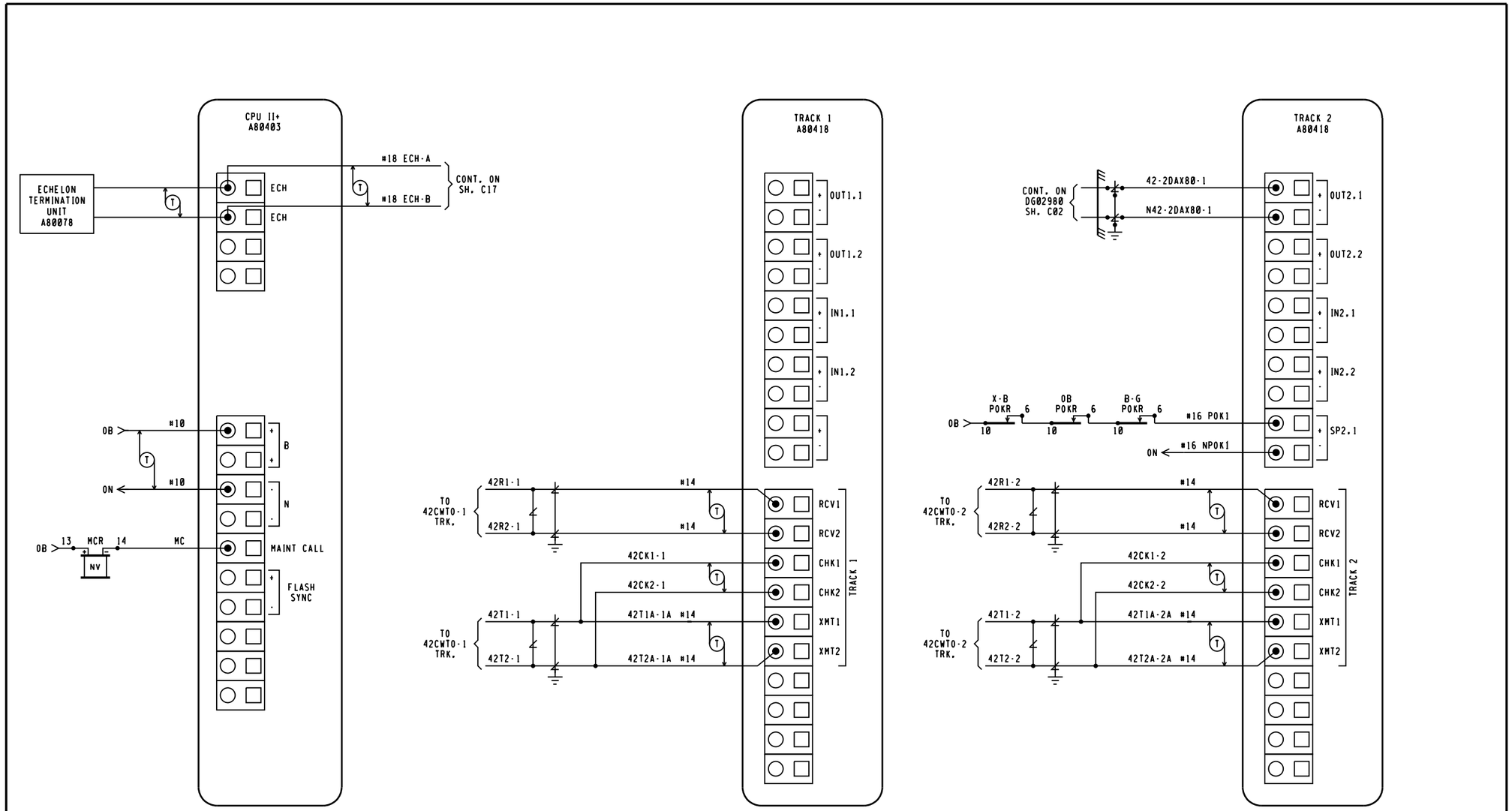

✕✕✕ : OUT

NEW WORK

CXD1437248 IL2014043

04-25-15 XRL/O.MCIVER/

xorail

6'X6' PTC CROSSING HOUSE

NOTE,

ECHELON CONNECTIONS NOT TO EXCEED 53' IN LENGTH AND TOTAL LENGTH COMBINED NOT TO EXCEED 430' WITH A MAXIMUM OF 8 NODES. RECOMMEND USE BELDEN WIRE CABLE #8461 OR EQUIVALENT.

REVISIONS	CSX TRANSPORTATION RAIL TRANSPORT GROUP ENGINEERING COMMUNICATIONS AND SIGNALS			
	SIGNALS 293/294/295/296 & 186TH ST 283191T DETECTION CIRCUITRY CWE-42 LANSING, IL M.P. DG-29.41			
	DESIGNED XRL	DIGITIZED XRL	CHECKED XRL	DATE 04-25-15

DRAWING	SHEET NO	NEXT SH	NEXT FILE	NEXT SH	FILE	SHEET
.....	.....	.....	DG02941	C13	DG02941	C12 A

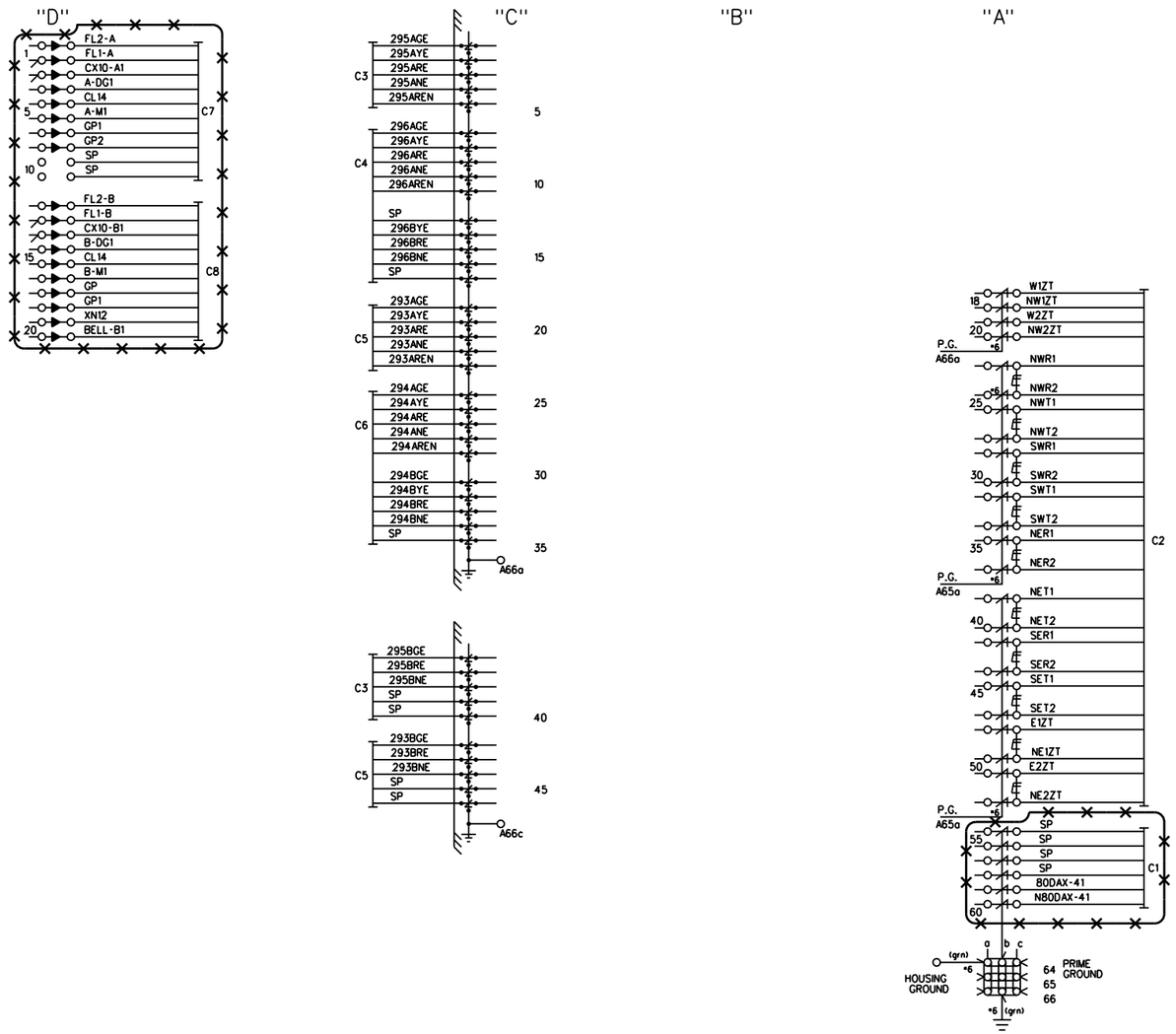

CABLE DESIGNATION

C1- 19 COND. #14
C2- 24 SC #6 TW TO TRACK
C3- 10C #9 TO SIGNALS 295A & 295B
C4- 10C #9 TO SIGNALS 296A & 296B
C5- 10C #9 TO SIGNALS 293A & 293B
C6- 10C #9 TO SIGNALS 294A & 294B
C7- CABLE TO GATE "A"
C8- CABLE TO GATE "B"

: IN
: OUT

CXD1437248 IL2014043
04-25-15 XRL/O.MCIVER/

xorail

REVISIONS	
08-12-96 NST	
09-25-14 XRL	IL2010010, IL2010010A IL2014028
03-12-15 XRL	IL2014005

CSX TRANSPORTATION
RAIL TRANSPORT GROUP ENGINEERING
COMMUNICATIONS AND SIGNALS

SIGNALS 293/294/295/296

186TH 183RD ST 283191T
ENTRANCE BOARD LAYOUT
LANSING, IL M.P. DG-29.41

DESIGNED	DIGITIZED	CHECKED	DATE
XRL	XRL	CSX	09-25-14

DRAWING	SHEET NO	NEXT SH	NEXT FILE	NEXT SH	FILE	SHEET
.....	.....	.....	DG02941	C14 / C09	DG02941	C13 / C08

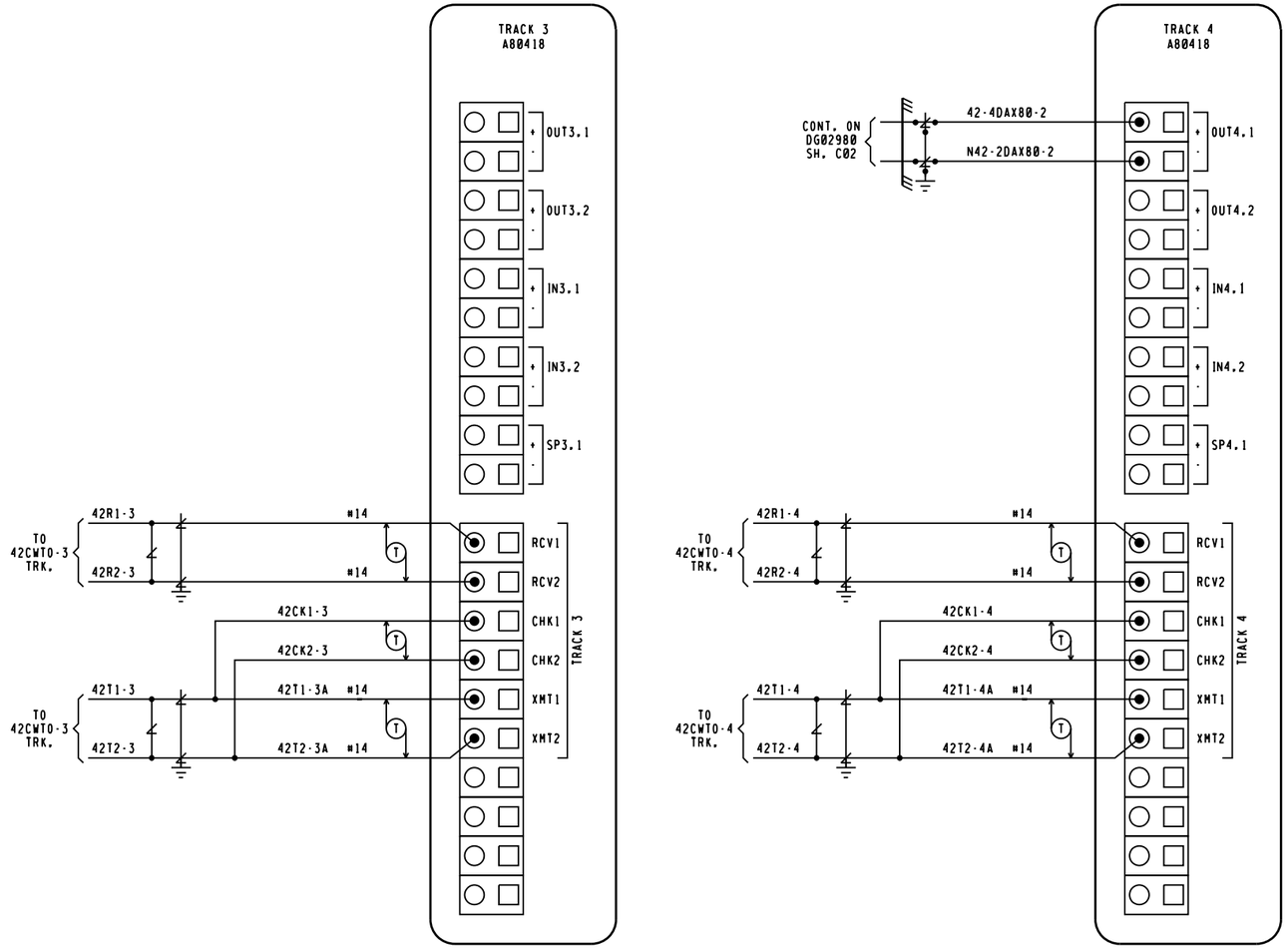

~~XXX~~ : OUT

NEW WORK

CXD1437248 IL2014043

04-25-15 XRL/O.MCIVER/

xorail

6'X6' PTC CROSSING HOUSE

NOTE.

ECHELON CONNECTIONS NOT TO EXCEED 53' IN LENGTH AND TOTAL LENGTH COMBINED NOT TO EXCEED 430' WITH A MAXIMUM OF 8 NODES. RECOMMEND USE BELDEN WIRE CABLE #8461 OR EQUIVALENT.

REVISIONS	CSX TRANSPORTATION RAIL TRANSPORT GROUP ENGINEERING COMMUNICATIONS AND SIGNALS			
	SIGNALS 293/294/295/296			
	186TH ST 283191T DETECTION CIRCUITRY CWE-42 LANSING, IL M.P. DG-29.41			
	DESIGNED XRL	DIGITIZED XRL	CHECKED XRL	DATE 04-25-15

DRAWING	SHEET NO	NEXT SH	NEXT FILE	NEXT SH	FILE	SHEET
.....	.....	.....	DG02941	C14	DG02941	C13 (A)

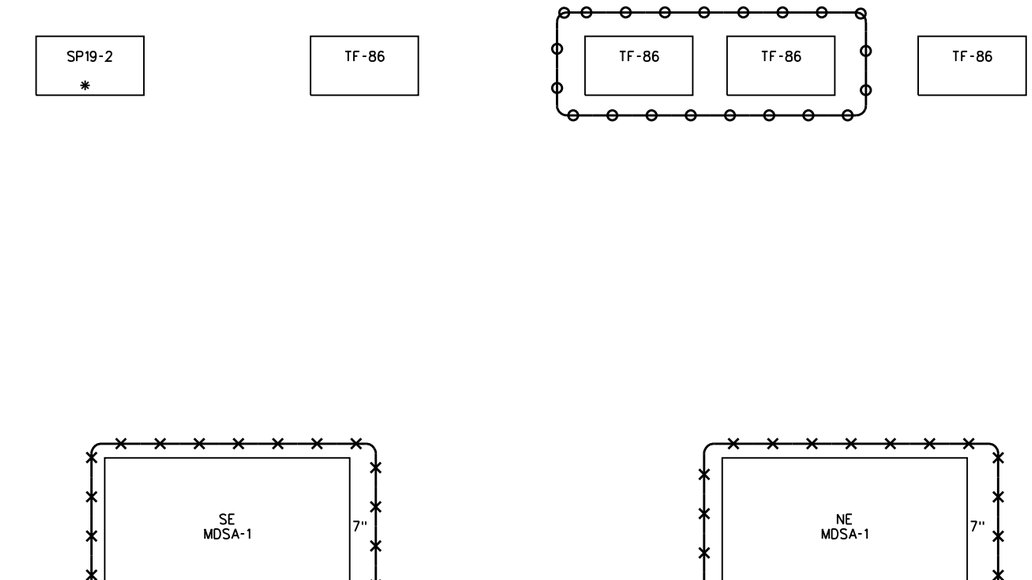

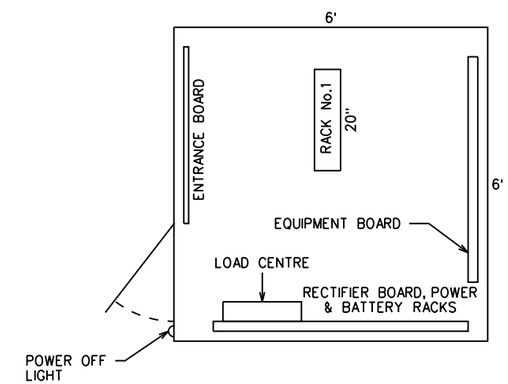

: IN
: OUT

CXD1437248
04-25-15

IL2014043
XRL/O.MCIVER/

xorail

REVISIONS
08-12-96 NST
09-25-14 XRL IL2010010, IL2014028

CSX TRANSPORTATION
RAIL TRANSPORT GROUP ENGINEERING
COMMUNICATIONS AND SIGNALS

SIGNALS 293/294/295/296 &

186TH X 183RD ST 283191T

EQUIPMENT BOARD & BUNGALOW LAYOUT

LANSING, IL M.P. DG-29.41

DESIGNED	DIGITIZED	CHECKED	DATE
XRL	XRL	CSX	09-25-14

DRAWING	SHEET NO	NEXT SH	NEXT FILE	NEXT SH	FILE	SHEET
.....	.....	.....	.....	.....	DG02941	C14
				C10		C09

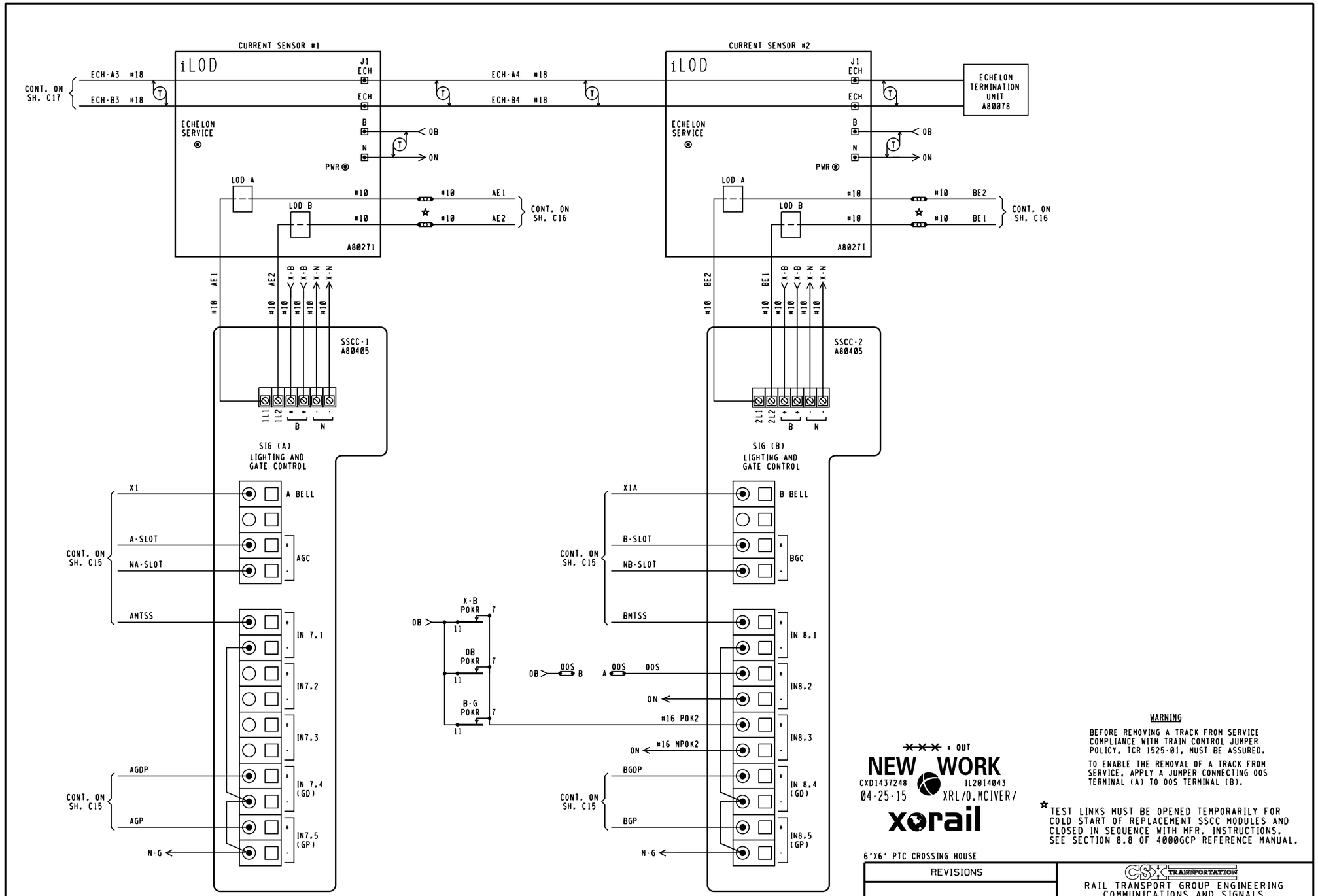

✱✱✱ = OUT

NEW WORK

CXD1437248 IL2014043

04-25-15 XRL/O.MCIVER/

xorail

6'X6' PTC CROSSING HOUSE

WARNING

BEFORE REMOVING A TRACK FROM SERVICE COMPLIANCE WITH TRAIN CONTROL JUMPER POLICY, TCR 1525-01, MUST BE ASSURED.

TO ENABLE THE REMOVAL OF A TRACK FROM SERVICE, APPLY A JUMPER CONNECTING 00S TERMINAL (A) TO 00S TERMINAL (B).

✱ TEST LINKS MUST BE OPENED TEMPORARILY FOR COLD START OF REPLACEMENT SSCC MODULES AND CLOSED IN SEQUENCE WITH MFR. INSTRUCTIONS. SEE SECTION 8.8 OF 4000GCP REFERENCE MANUAL.

REVISIONS

CSX TRANSPORTATION

RAIL TRANSPORT GROUP ENGINEERING
COMMUNICATIONS AND SIGNALS

SIGNALS 293/294/295/296

186TH ST 283191T

DETECTION CIRCUITRY CWE-42

LANSING, IL M.P. DG-29.41

DESIGNED	DIGITIZED	CHECKED	DATE
XRL	XRL	XRL	04-25-15

DRAWING	SHEET NO	NEXT SH	NEXT FILE	NEXT SH	FILE	SHEET
.....	.....	.....	DG02941	C15	DG02941	C14 (A)

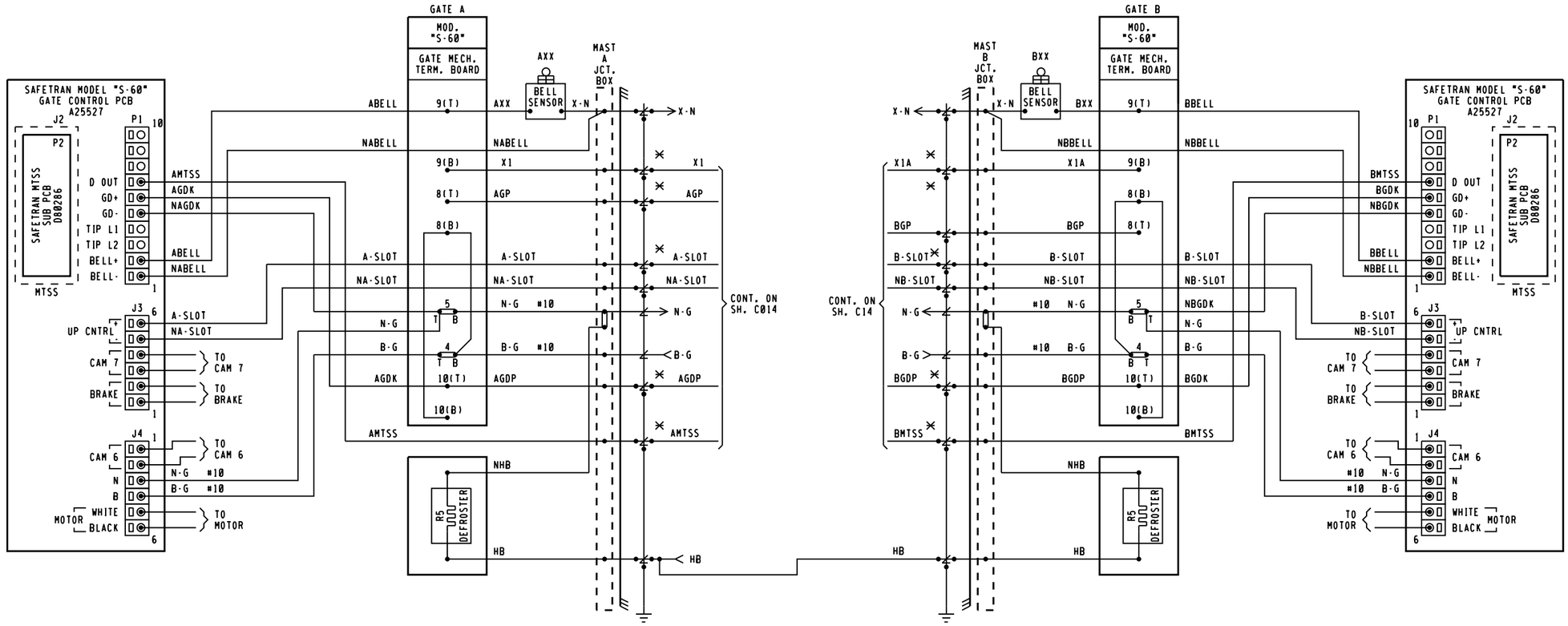

NEW WORK
CXD1437248 IL2014043
04-25-15 XRL/O.MCIVER/
xorail

6'X6' PTC CROSSING HOUSE

NOTES,
1. ✕ = TEST LINKS MUST BE OPEN TEMPORARILY FOR COLD START OF REPLACEMENT SSCC MODULES AND AND CLOSED IN SEQUENCE WITH MFR. INSTRUCTIONS. SEE SECTION 8.8 OF 4000GCP REFERENCE MANUAL.
2. = TERMINAL IN JCT. BOX BASE
3. ALL WIRING #16 UNLESS NOTED OTHERWISE.

REVISIONS			CSX TRANSPORTATION RAIL TRANSPORT GROUP ENGINEERING COMMUNICATIONS AND SIGNALS			
			SIGNALS 293/294/295/296 & 186TH ST 283191T CROSSING WARNING DEVICE GATE CIRCUITRY LANSING, IL M.P. DG-29.41			
			DESIGNED XRL	DIGITIZED XRL	CHECKED XRL	DATE 04-25-15
DRAWING	SHEET NO	NEXT SH	NEXT FILE DG02941	NEXT SH C16	FILE DG02941	SHEET C15

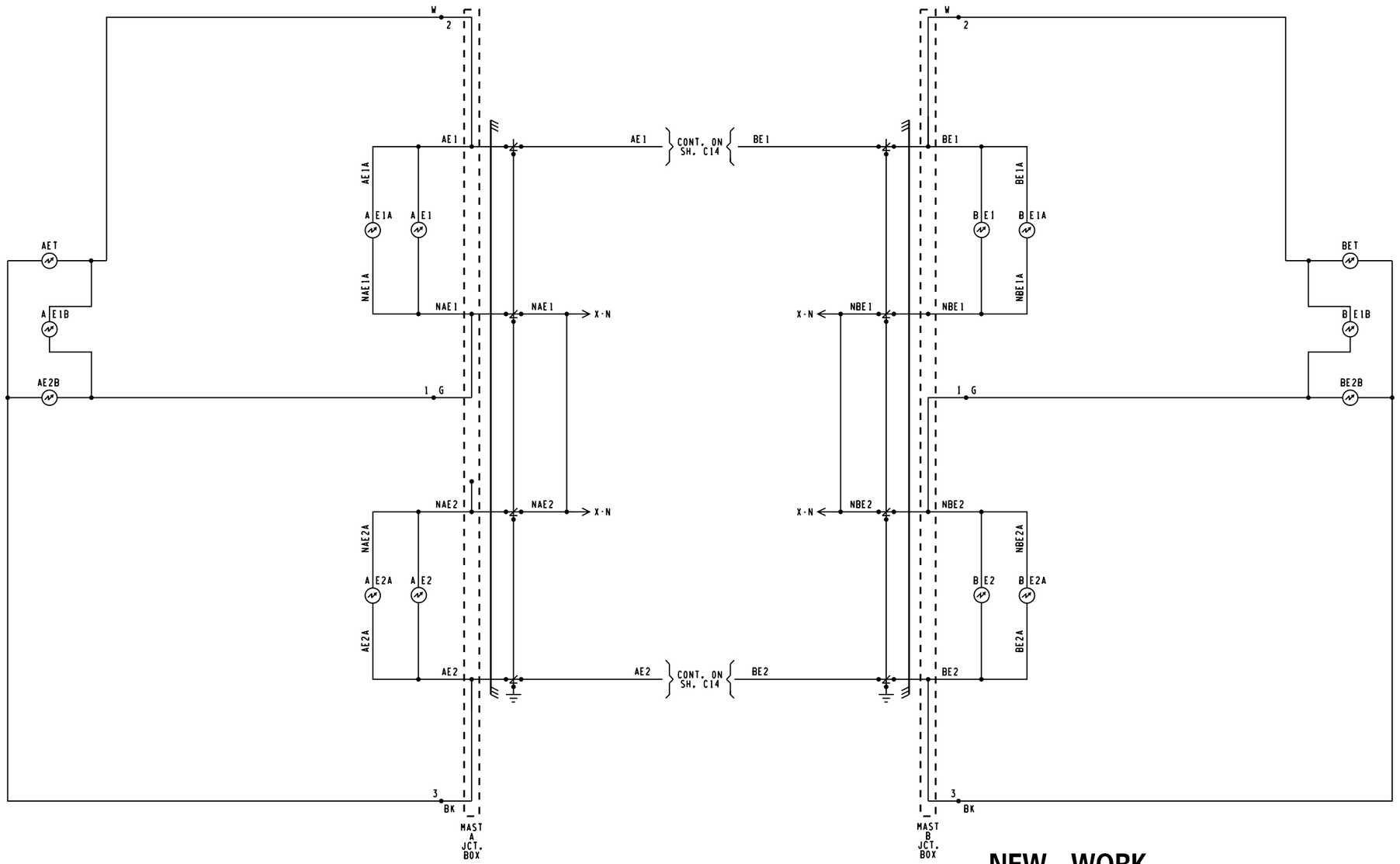

NEW WORK

CXD1437248 IL2014043

04-25-15 XRL/O.MCIVER/

xorail

6'X6' PTC CROSSING HOUSE

NOTES.

1. = TERMINAL IN JUNCTION BOX
2. WHEN 7 OR MORE LIGHTS ON A SINGLE STRUCTURE REFER TO SS382 FOR REQUIRED ARRESTERING
3. FEEDS TO ALL BUSSES AND LIGHT CIRCUITS ARE #10 FLEX
4. UNLESS NOTED ALL OTHER WIRING #16
5. CABLING SPECIFICATIONS SHOWN ON SH. S01

REVISIONS						
DRAWING	SHEET NO	NEXT SH	NEXT FILE	NEXT SH	FILE	SHEET
.....	.....	.....	DG02941	C17	DG02941	C16

CSX TRANSPORTATION

RAIL TRANSPORT GROUP ENGINEERING
COMMUNICATIONS AND SIGNALS

SIGNALS 293/294/295/296

186TH ST 283191T

CROSSING WARNING DEVICE LIGHT CIRCUITRY

LANSING, IL M.P. DG-29.41

DESIGNED	DIGITIZED	CHECKED	DATE
XRL	XRL	XRL	04-25-15

WAYSIDE ACCESS GATEWAY CONFIGURATION	
SITE ATCS ADDRESS	7.125.308.010.07.01 7.125.LLL.GGG.SS.DD
SERIAL INTERFACE	38,400,NONE,8,1/NOFLOW
SERIAL FORMAT	RAW
WAG TEST MODE	DISABLED
ECHELON ADDRESS	01.07
UDP PORTS	5000, 5001, 5002, 5003
ROUTE TABLE EXPIRY	5400 SEC
BROADCAST MEDIUM	IP ETHERNET
TCP PORTS	23, 10023, 6001, 6002
DHCP SERVER	DISABLED
IP ADDRESS	192.168.13.1
TYPE 7 ROUTE LENGTH	12--7RRLLLGGGSS
IP NETWORK MASK	255.255.255.0
WAG CIRCUIT ID	DISABLE
ROUTING REGION DOMAIN 1	OCGSERVER1.JAX.COM
ATCS SERVER UDP PORT NUMBER	6001
TELNET NUMBERS	WAG 6002, SERIAL 10023
DEFAULT GATEWAY IP	192.168.013.031

NOTE TO INSPECTOR, AT INSTALLATION OF WAG, OR UPDATE OF THE CONFIGURATION, OR UPDATE OF THE EXECUTIVE PROGRAM, MARK-UP CONFIGURATION TABLE FOR AS IN SERVICE PLANS

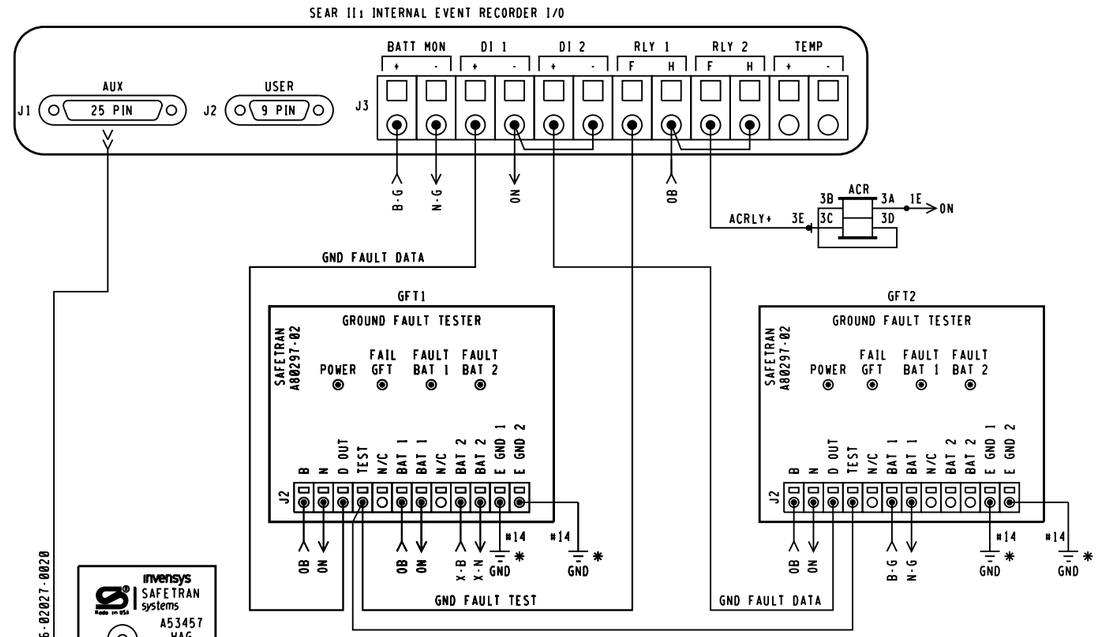

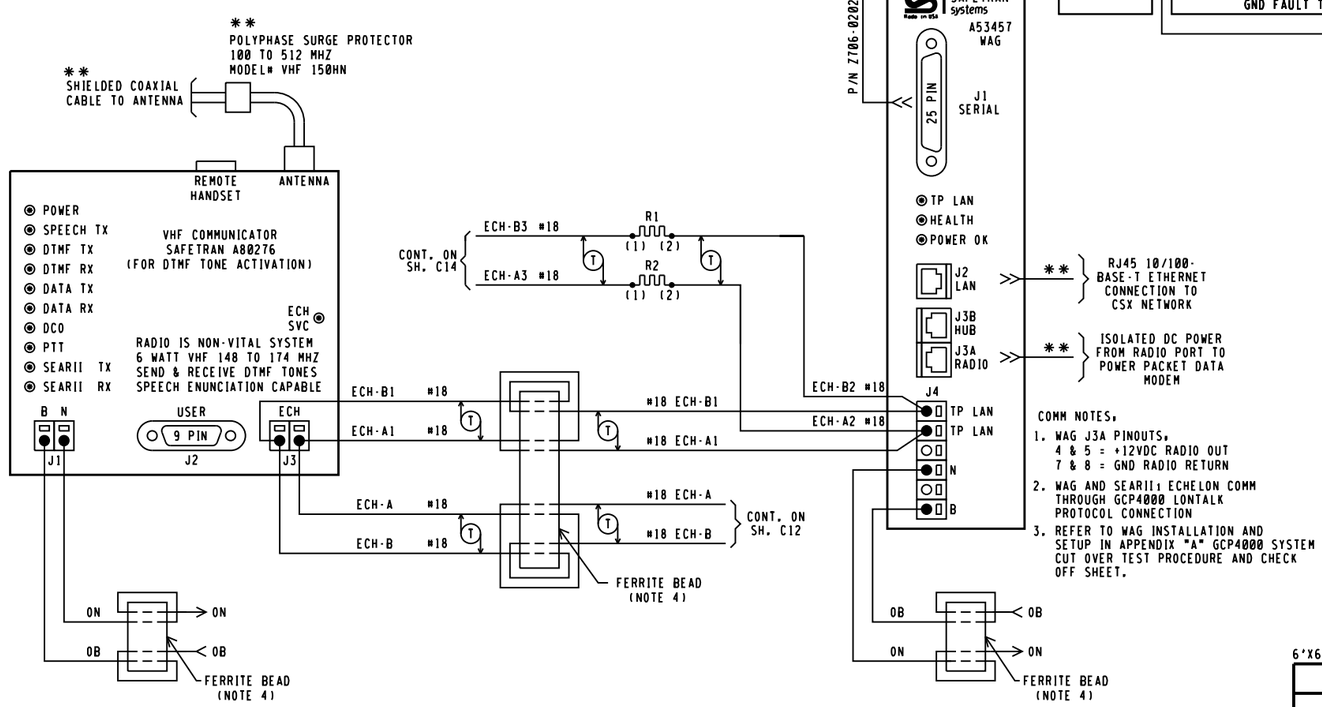

COMM NOTES:

1. WAG J3A PINOUTS:
   4 & 5 = +12VDC RADIO OUT
   7 & 8 = GND RADIO RETURN
2. WAG AND SEARII: ECHELON COMM THROUGH GCP4000 LONTALK PROTOCOL CONNECTION
3. REFER TO WAG INSTALLATION AND SETUP IN APPENDIX "A" GCP4000 SYSTEM CUT OVER TEST PROCEDURE AND CHECK OFF SHEET.

GCP PROGRAMMING FOR VHF RADIO

REMOTE DTMF CROSSING ACTIVATION (ACTIVATES ENTIRE CROSSING)	
TO ACTIVATE PRESS:	191#
TO DE-ACTIVATE PRESS:	191*
(ACTIVATION WILL TIME OUT AFTER 60 SEC.)	

: NOTE

NEW WORK
CXD1437248 IL2014043
04-25-15 XRL/O.MCIVER/
xorail

NOTES:

1. ALL WIRING #16 UNLESS NOTED OTHERWISE.
2. * = EARTH GROUND REF. TERMINALS REQUIRED FOR DETECTION. DO NOT JUMPER TERMINALS. MUST BE CONNECTED TO DIFFERENT POINTS OF BUNGALOW.
3. ** = TO BE PROVIDED BY COMMUNICATIONS
4. LOOP WIRE THROUGH FERRITE BEAD TWICE.
5. R1 & R2 = .5 WATT, 20Ω RESISTOR

6'X6' PTC CROSSING HOUSE

REVISIONS	CSX TRANSPORTATION RAIL TRANSPORT GROUP ENGINEERING COMMUNICATIONS AND SIGNALS			
	SIGNALS 293/294/295/296 &			
	186TH ST 283191T CROSSING WARNING DEVICE CIRCUITRY LANSING, IL M.P. DG-29.41			
	DESIGNED XRL	DIGITIZED XRL	CHECKED XRL	DATE 04-25-15

DRAWING	SHEET NO	NEXT SH	NEXT FILE	NEXT SH	FILE	SHEET
.....	.....	.....	DG02941	C18	DG02941	C17

DEFAULTS AND/OR STYLE		FIELD RECORD
SEAR II1 EXECUTIVE PROGRAM	VERSION, 9V725A01	VERSION, _____
APPLICATION PROGRAM (IF LOADED)	VERSION, 9V864A01	VERSION, _____

NOTE TO INSPECTOR,
AT IN SERVICE OF SEAR II1 OR UPDATE OF ITS INTERNAL EXECUTIVE PROGRAM OR ITS CSXT APPLICATION PROGRAM, NOTE THE VERSION NUMBER OF EACH PROGRAM MUST IN THE BLANK FIELDS.

SITE SET UP MENU

FUNCTION	LED DISPLAY
DATE/TIME	XX-XX-XXXX XX:XX:XX
AUTOMATIC DST ADJUSTMENT	YES
TIME ZONE	EASTERN
SITE NAME	186TH ST.
MILEPOST	M.P. DG-29.42
DOT NUMBER	283191T
TESTER TYPE	CROSSING
DATE FORMAT	MM-DD-YYYY
TEMP FORMAT	FAHRENHEIT
INDICATE HOLD (SEC)	0
INDICATE REFRESH (SEC)	60
SITE ATCS ADDRESS	7.125.308.010.99.01 (7.RRR.LLL.GGG.99.01)
SITE TYPE	COLLECTOR
OFFICE ADDRESS	2.125.00.0000 (2.RRR.NN.DDDD)
POLL ID	1
MODE	GEN/ATCS
WAMS XID	DISABLED
OFFICE COMM. DEVICE	■WAG (ECHELON) □DIRECT (RS232) □MCM (ECHELON) □MCM (RS232) □DIAL MODEM □S200 RADIO (RS422)
RADIO ATCS ADDR	7.125.308.010.07.01 (7.RRR.LLL.GGG.NN.01)
FIELD COMM. DEVICE	□WAG (ECHELON) ■NONE □VHF COMM. (ECHELON) □VHF COMM. (RS232) □SPREAD-SPECTRUM (RS232)
USER PORT BAUD	57,600
USER PORT DATA BITS	8
USER PORT PARITY	NONE
USER PORT STOP BITS	1
USER PORT FLOW CONTROL	NONE
AUX PORT BAUD	38,400
AUX PORT DATA BITS	8
AUX PORT PARITY	NONE
AUX PORT STOP BITS	1
AUX PORT FLOW CONTROL	NONE

INSPECTOR NOTE,
CURRENT VALUES MAY VARY DEPENDANT ON FIELD CONDITIONS, MARK UP PER ACTUAL READINGS FOR IN-SERVICE REVISION.

LIT BULB COUNT ON EACH CIRCUIT	NO.	TYPE OF BULB	CURRENT READING IN AMP. AT APPROX. 10.0 V ARRAY VOLTAGE
CURRENT SENSOR (1) AE1, LAMP SET UP	4	□BULBS ■LED	X.X
CURRENT SENSOR (1) AE2, LAMP SET UP	4	□BULBS ■LED	X.X
CURRENT SENSOR (2) BE1, LAMP SET UP	4	□BULBS ■LED	X.X
CURRENT SENSOR (2) BE2, LAMP SET UP	4	□BULBS ■LED	X.X

INSPECTOR NOTE,
VHF RADIO CHANNEL AND DATA CHANNEL = ENGINEERING CHANNEL. CHOOSE PROPER FREQUENCY FROM VHF RADIO CHANNELS.

VHF RADIO CHANNELS			
1	161.130	5	161.550
2	160.710	6	160.785
3	160.560	7	160.785
4	160.860	8	160.785

NOTE 7

MENU → CONFIGURATION → MODULES → ADD MODULE	
MODULE TYPE	WAG
MODULE NAME	DEFAULT
WAG ECHELON NODE	7

NOTE,
REFER TO WAG INSTALLATION AND SETUP IN APPENDIX "A" GCP4000 SYTEM CUT OVER, TEST PROCEDURE AND CHECK OFF SHEET.

MEASURE BATTERY VOLTAGE AT INPUT			
BATTERY VOLTAGE	OB	XXXX	VOLTS
BATTERY VOLTAGE	X-B	XXXX	VOLTS
BATTERY VOLTAGE	B-G	XXXX	VOLTS

INSPECTOR NOTE,
VOLTAGE VALUES MAY VARY DEPENDANT ON FIELD CONDITIONS, MARK UP PER ACTUAL READINGS FOR IN-SERVICE REVISION.

NOTE 6

PROGRAM MENU SELECT		
EDIT DIGITAL INPUTS	■ NO	□ YES
EDIT BATTERIES	■ NO	□ YES
EDIT RELAYS	■ NO	□ YES
EDIT TEST LED'S	■ NO	□ YES
EDIT ILOD1 SENSOR ☆	■ NO	□ YES
EDIT ILOD2 SENSOR ☆	■ NO	□ YES
EDIT ILOD3 SENSOR ☆	■ NO	□ YES
EDIT ILOD4 SENSOR ☆	■ NO	□ YES
EDIT VHF SETTINGS	■ NO	□ YES
GCP4K ATCS SUBNODE	16	

☆STAR = OPTIONS SHOWN DEPENDANT ON NUMBER OF ILODS SELECTED

CONTROL SYSTEM CONFIGURATION MENU QUESTIONS

	OPTION	SELECTION
NOTE 9 -	RESET NAMES / MODULES	NO ■ YES □
	RAILROAD NUMBER	125
	CROSSING CONFIGURATION	NORMAL ■ SPLIT GATE □ EXTERNAL ENTRANCE GATE CONTROLLER(S) □
	AND1 USED AS XR	NO □ YES ■
	AND2 USED AS XR	NO ■ YES □
	AND3 USED AS XR	NO ■ YES □
	AND4 USED AS XR	NO ■ YES □
	AND5 USED AS XR	NO ■ YES □
	AND6 USED AS XR	NO ■ YES □
	AND7 USED AS XR	NO ■ YES □
	AND8 USED AS XR	NO ■ YES □
	ENTRANCE GATES*	0 □ 1 □ 2 ■ 3 □ 4 □ 5 □ 6 □ 7 □ 8 □
	GATE POSITION FAIL*	20 SECS.
NOTE 8 -	BATTERY BANKS*	1 □ 2 ■ 3 □
	BATT MON USED*	NO □ YES ■
	OB RESOLUTION*	0.2 □ 0.5□ 1.0■
	X-B RESOLUTION*	0.2 □ 0.5□ 1.0■ NOT PRESENT□
	X-B2 RESOLUTION*	0.2 □ 0.5□ 1.0□ NOT PRESENT■
	BATT MON RESOLUTION*	0.2 □ 0.5□ 1.0■ NOT PRESENT□
	INTERNAL CROSSING CONTROLLERS*	0 □ 1 □ 2 ■
	EXTERNAL CROSSING CONTROLLERS*	0 ■ 1 □ 2 □
	VHF COMMUNICATOR*	YES ■ NO □
	DTMF ACTVATION*	YES ■ NO □
NOTE 1	ACTIVATION CODE	191
NOTE 1	ACTIVATION TIMEOUT	(60 SEC)
	ILOD MODULES*	0 □ 1 □ 2 ■ 3 □ 4 □
NOTE 2 -	ANY LED BULBS USED*	NO □ YES ■
	AUTO INSPECTIONS*	YES □ NO ■
	BELL SENSORS*	0 ■ 1 □ 2 □ 3 □ 4 □
NOTE 3	BELL SENSOR TSS 1*	NO ■ YES □
NOTE 3	BELL SENSOR TSS 2*	NO ■ YES □
NOTE 3	BELL SENSOR TSS 3*	NO ■ YES □
NOTE 3	BELL SENSOR TSS 4*	NO ■ YES □
NOTE 3	BELL SENSOR TSS 5*	NO ■ YES □
NOTE 3	BELL SENSOR TSS 6*	NO ■ YES □
NOTE 3	BELL SENSOR TSS 7*	NO ■ YES □
NOTE 3	BELL SENSOR TSS 8*	NO ■ YES □
NOTE 3	BELL ON*	GATES LOWERING ■ GATES MOVING □ ALWAYS □
NOTE 3	GFT'S	YES ■ NO □
NOTE 3	BATTERIES ON GFT1	1 □ 2 ■
NOTE 4 -	GATE TIP SENSORS*	YES □ NO ■
	RTU	NO ■ YES □
NOTE 5	VHF VOICE CHANNEL	1 □ 2 □ 3 □ 4 □ 5 □ 6 □ 7 □ 8 □
NOTE 5	VHF DATA CHANNEL	1 □ 2 □ 3 □ 4 □ 5 □ 6 □ 7 □ 8 □
	USE NON-CRITICAL FEATURE*	NO ■ YES □
	FULL APPROACH MOVE ALARMS*	ACTIVATE ■ DO NOT ACTIVATE □
	ENABLE PASSWORD	NO ■ YES □

NOTES,

1. OPTION AVAILABLE IF VHF COMMUNICATOR = YES LAST 3 DIGITS OF DOT NUMBER.
2. OPTION AVAILABLE IF ILODS.
3. OPTION AVAILABLE IF BELL SENSORS.
4. OPTION AVAILABLE IF GATES.
5. OPTION AVAILABLE IF VHF RADIO.
6. ONLY YES IN SPECIAL CIRCUMSTANCES.
7. SELECT "MENU" THEN "CONFIGURATION" FROM SEAR II INTERFACE KEYPAD TO ACCESS MODULE CONFIGURATION MENU.
8. BATTERY BANKS* = NUMBER OF BANKS EXCLUDING THE BANK APPLIED TO THE BAT MON SEAR INPUT
9. YES ON INITIAL SETUP

= NOTE

NEW WORK
CXD1437248 IL2014043
04-25-15 XRL/O.MCIVER/
xorail

6'X6' PTC CROSSING HOUSE

REVISIONS						
DRAWING	SHEET NO	NEXT SH	NEXT FILE	NEXT SH	FILE	SHEET
.....	.....	.....	DG02941	.....	DG02941	C18

CSX TRANSPORTATION
RAIL TRANSPORT GROUP ENGINEERING
COMMUNICATIONS AND SIGNALS

SIGNALS 293/294/295/296 &
186TH ST 283191T
SEAR II1 CONFIGURATION & FUNCTIONS
LANSING, IL M.P. DG-29.41

DESIGNED	DIGITIZED	CHECKED	DATE
XRL	XRL	XRL	05-14-14

REVISIONS				
REV. NO.	PROJECT NO.	DESIGN DATE	IN SERVICE DATE	REVISION DATE
1	IL2014005	04-02-14	01-15-15	03-12-15
2	IL2014043	04-25-15		

TO BE COMPLETED ON A.I.S.

INDEX

CONTENTS

SH. NO.		REVISION NO. 1	2	3	4	5	6	7	8	9
I01	INDEX AND REVISIONS	X	⊘							
S01	TRACK AND SIGNAL PLAN	X	⊘							
G01	INTERNAL SOFTWARE AND GATES LOGIC DIAGRAMS	X	⊘							
P01	MINIMUM PROGRAM STEPS REPORT CWE-80	X	⊘							
E01	POWER DISTRIBUTION	X	⊘							
C01	DETECTION DEVICE CONSIST CWE-80	X								
C02	DETECTION CIRCUITRY CWE-80	X	⊘							
C03	DETECTION CIRCUITRY CWE-80	X								
C04	CROSSING WARNING DEVICE GATE CIRCUITRY	X								
C05	CROSSING WARNING DEVICE LIGHT CIRCUITRY	X								
C06	CROSSING WARNING DEVICE CIRCUITRY	X								
C07	SEAR III CONFIGURATION & FUNCTIONS	X								

⊘ = PLANS SENT TO FIELD (DISTRIBUTED)

X = PLANS AS-IN-SERVICED (UP TO DATE)

= NOTE

= IN

= OUT

CXD1437248 IL2014043

04-25-15 XRL/O.MCIVER/

xorail

CSX TRANSPORTATION

RAIL TRANSPORT GROUP ENGINEERING
COMMUNICATIONS AND SIGNALS

BURNHAM AVE. 283193G

INDEX AND REVISIONS
LANSING, IL M.P. DG-29.80

DESIGNED	DIGITIZED	CHECKED	DATE
XRL/KSB	XRL/KSB	XRL	04-02-14

DESIGN DATE	REV. NO.	DRAWING	SHEET NO	FILE	SHEET
04-02-14	1	-----	-----	DG02980	I01

04-25-15 02

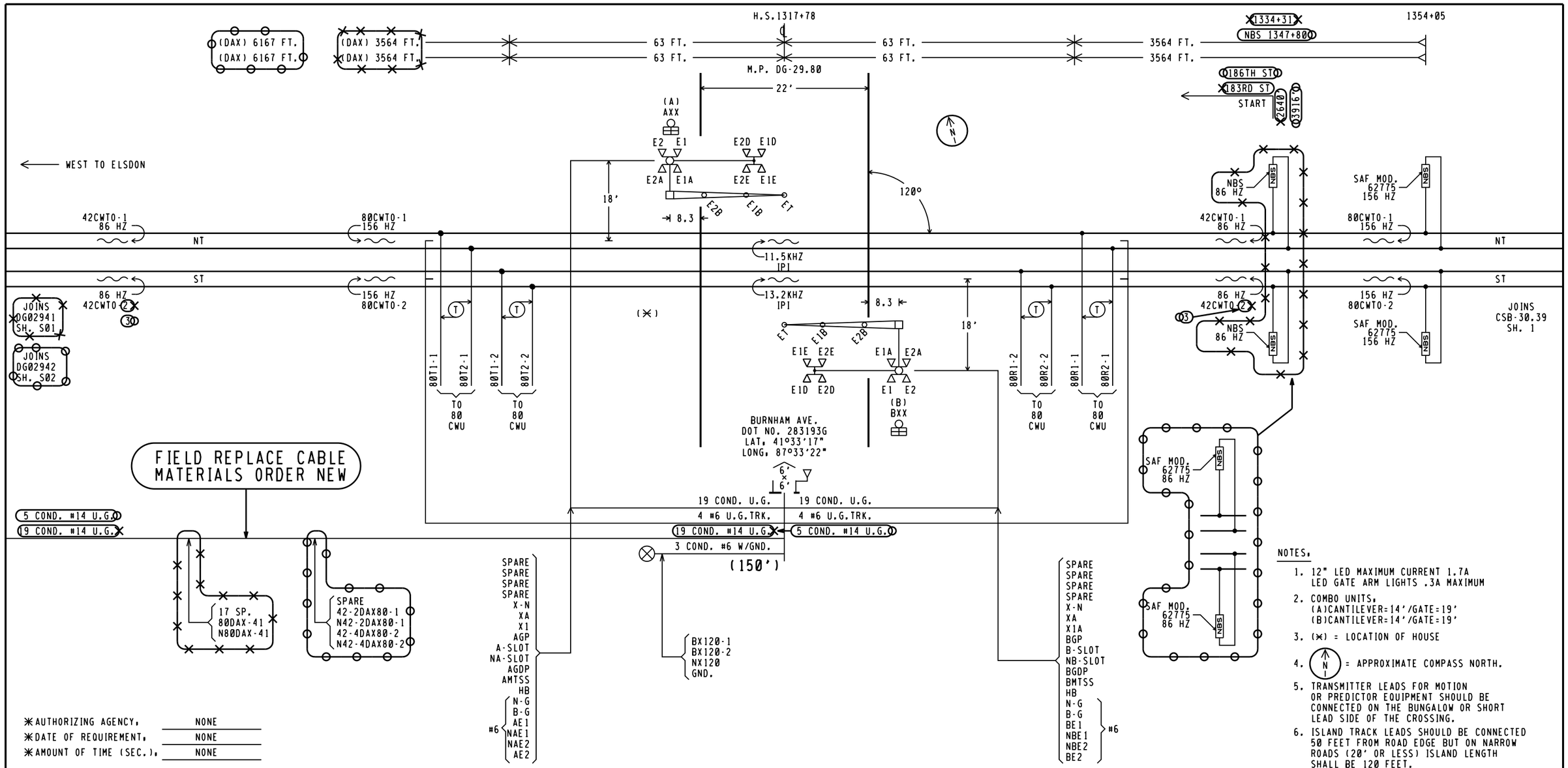

FIELD REPLACE CABLE
MATERIALS ORDER NEW

✳AUTHORIZING AGENCY, NONE
✳DATE OF REQUIREMENT, NONE
✳AMOUNT OF TIME (SEC.), NONE

APPROACH LENGTHS TABLE DC, AFO, TYPE C, MOTION, CWT, OR OTHER	WESTWARD ML1 CWT	EASTWARD ML1 CWT	WESTWARD ML2 CWT	EASTWARD ML2 CWT
STANDARD MINIMUM WARNING TIME IN SECONDS	25	25	25	25
ROADWAY GATE TIME IN SECONDS	5	5	5	5
CLEARANCE TIME IN SECONDS	3	3	3	3
DOT TRAFFIC LIGHT SIMULTANEOUS PREEMPT TIME IN SECONDS✳	0	0	0	0
DESIGNED WARNING TIME FOR TRAINS AT TIME TABLE SPEED	33 SEC.	33 SEC.	33 SEC.	33 SEC.
DOT TRAFFIC LIGHT ADVANCE PREEMPT TIME IN SECONDS ✳	0	0	0	0
CONTROL EQUIPMENT DECISION TIME IN SECONDS	60 5	5	60 5	5
DESIGNED DETECTION TIME FOR TRAINS AT TIME TABLE SPEED	38 SEC.	38 SEC.	38 SEC.	38 SEC.
TIME TABLE MAXIMUM TRAIN SPEED IN MILES PER HOUR	39 60	60	39 60	60
BUFFER SPEED IN MILES PER HOUR	5	5	5	5
TOTAL WARNING SYSTEM DESIGN SPEED IN MILES PER HOUR	65	65	65	65
APPROACH DISTANCE TO ISLAND EDGE IN FEET	3564	3564	3564	3564
HALF WIDTH OF ISLAND IN FEET	63	63	63	63
APPROXIMATE MILE POSTS FOR APPROACH CIRCUIT	28.88	30.40	28.88	30.40
	3652		3652	

NOTES.

1. 12" LED MAXIMUM CURRENT 1.7A
   LED GATE ARM LIGHTS .3A MAXIMUM
2. COMBO UNITS.
   (A)CANTILEVER=14'/GATE=19'
   (B)CANTILEVER=14'/GATE=19'
3. (✳) = LOCATION OF HOUSE
4. (N) = APPROXIMATE COMPASS NORTH.
5. TRANSMITTER LEADS FOR MOTION OR PREDICTOR EQUIPMENT SHOULD BE CONNECTED ON THE BUNGALOW OR SHORT LEAD SIDE OF THE CROSSING.
6. ISLAND TRACK LEADS SHOULD BE CONNECTED 50 FEET FROM ROAD EDGE BUT ON NARROW ROADS (20' OR LESS) ISLAND LENGTH SHALL BE 120 FEET.
7. WARNING SYSTEM APPROACH CIRCUIT DISTANCES ARE TO BE MEASURED FROM THE ISLAND TRACK CONNECTIONS.

= NOTE
= IN
= OUT

CXD1437248 IL2014043
04-25-15 XRL/O.MCIVER/
xorail

CSX TRANSPORTATION
RAIL TRANSPORT GROUP ENGINEERING
COMMUNICATIONS AND SIGNALS

BURNHAM AVE. 283193G

TRACK AND SIGNAL PLAN
LANSING, IL M.P. DG-29.80

DESIGNED	DIGITIZED	CHECKED	DATE
XRL/KSB	XRL/KSB	XRL	04-02-14
DESIGN DATE 04-02-14	REV. NO. 1		
DRAWING -----	SHEET NO -----	FILE DG02980	SHEET S01

04-25-15 02

Minimum Program Steps Report

Location and SIN

DOT Number: 283193G
Milepost Number: DG-29.80
Site Name: BURNHAM AVE

SIN: 712530800816 *

* Parameter is part of office check number calculation.

MCF and Template Selection

MCF Name: GCP-T6X-02-1.mcf
MCF Revision: 021
MCFCRC: 6076E435

Template = 1A.6 Trk Bi *

* Parameter is part of office check number calculation.

Minimum Program Steps

TEMPLATE: module configuration
Track 2/RIO 1 Slot = Track *

TEMPLATE: track 1-Bi, Island
Track 1 , GCP Frequency = 156 Hz (See Plans)
Track 1 , Approach Distance = 3564 ft (See Plans)
Track 1 , Prime Warning Time = 33 sec (See Plans)
Track 1 , GCP Transmit Level = High (Set in Field)
Track 1 , Isl Frequency = 11.5 kHz (See Plans)

TEMPLATE: track 2-Bi, Island
Track 2 , GCP Frequency = 156 Hz (See Plans)
Track 2 , Approach Distance = 3564 ft (See Plans)
Track 2 , Prime Warning Time = 33 sec (See Plans)
Track 2 , GCP Transmit Level = High (Set in Field)
Track 2 , Isl Frequency = 13.2 kHz (See Plans)

TEMPLATE: AND 1 XR
AND 1 Enable Used = Yes *

TEMPLATE: SSCC
SSCC-1 Number of GDs = 1 *
SSCC-2 Number of GPs = 1 *
SSCC-2 Number of GDs = 1 *
SSCC 1 , Lamp Neutral Test = Off (Set in Field)
SSCC 2 , Lamp Neutral Test = Off (Set in Field)

TEMPLATE: OOS
OOS Control = Display+OOS IPs *
T2 OOS Control = OOS Input 1 *

TEMPLATE: IP assignment 1
IN 1.1 = AND 1 XR Enable *

TEMPLATE: IP assignment SSCC
IN 7.2 = Not Used *
IN 8.2 = Out Of Service IP 1 *
IN 8.4 = GD 2.1 *
IN 8.5 = GP 2.1 *

GCP: track 1
Track 1 , Island Distance = 126 ft *

GCP: track 2
Track 2 , Island Distance = 126 ft *

ADVANCED: site options
Daylight Savings = On *

SSCC: 1
SSCC-1 Gate Delay = 5 sec *
SSCC 1 , Flash Rate = 55 *

SSCC: 2
SSCC-2 Gate Delay = 5 sec *
SSCC 2 , Flash Rate = 55 *

SEAR
DI 1 = Gnd Flt Tester 1 *
DI 2 = Gnd Flt Tester 2 *
Rly 1 = Ground Fault Test *
Rly 2 = AC Control *

SEAR: slot 7-8 inputs
IN 7.1 = TSS 1 *
IN 8.1 = TSS 2 *
IN 8.3 = POK 2 *

* Parameter is part of office check number calculation.

Check Numbers

Office Check No. (DT 4.6.0): 308B6A87
Office Check Number: 308B6A87
Config. Check Number: 22F20829
(Based on MCF Revision 021)

Parameters not part of office check number calculation:

Track 1 , GCP Frequency = 156 Hz
Track 1 , Approach Distance = 3564 ft
Track 1 , Prime Warning Time = 33 sec
Track 1 , Prmpt Warning Time = 45 sec (See Plans)
Track 1 , GCP Transmit Level = High
Track 1 , Isl Frequency = 11.5 kHz
Track 2 , GCP Frequency = 156 Hz
Track 2 , Approach Distance = 3564 ft
Track 2 , Prime Warning Time = 33 sec
Track 2 , Prmpt Warning Time = 45 sec (See Plans)
Track 2 , GCP Transmit Level = High
Track 2 , Isl Frequency = 13.2 kHz
SSCC 1 , Lamp Neutral Test = Off (Set in Field)
SSCC 2 , Lamp Neutral Test = Off (Set in Field)

Comments

<none>

ALL OUT
THIS SHEET IS VOID
WHEN AS IN SERVICED.

CXD1437248 IL2014043
04-25-15 XRL/O.MCIVER/

xorail

CSX TRANSPORTATION
RAIL TRANSPORT GROUP ENGINEERING
COMMUNICATIONS AND SIGNALS

BURNHAM AVE. 283193G

MINIMUM PROGRAM STEPS REPORT CWE-80
LANSING, IL M.P. DG-29.80

DESIGNED	DIGITIZED	CHECKED	DATE
XRL/KSB	XRL/KSB	XRL	04-02-14

DESIGN DATE	REV. NO.	DRAWING	SHEET NO	FILE	SHEET
04-02-14	1	-----	-----	DG02980	P01

Minimum Program Steps Report

Location and SIN

DOT Number: 283193G
Milepost Number: DG-29.80
Site Name: BURNHAM AVE

SIN: 712530800816 *

* Parameter is part of office check number calculation.

MCF and Template Selection

MCF Name: GCP-T6X-02-1.mcf
MCF Revision: 021
MCFCRC: 6076E435

Template = 1A,6 Trk Bi *

* Parameter is part of office check number calculation.

Minimum Program Steps

TEMPLATE: module configuration
Track 2/RIO 1 Slot = Track *

TEMPLATE: track 1-Bi, Island
Track 1 , GCP Frequency = 156 Hz (See Plans)
Track 1 , Approach Distance = 3564 ft (See Plans)
Track 1 , Prime Warning Time = 33 sec (See Plans)
Track 1 , Prmpt Warning Time = 45 sec (See Plans) (Hidden)
Track 1 , Prime UAX = IP *
Track 1 , GCP Transmit Level = High (Set in Field)
Track 1 , Isl Frequency = 11.5 kHz (See Plans)

TEMPLATE: track 2-Bi, Island
Track 2 , GCP Frequency = 156 Hz (See Plans)
Track 2 , Approach Distance = 3564 ft (See Plans)
Track 2 , Prime Warning Time = 33 sec (See Plans)
Track 2 , Prmpt Warning Time = 45 sec (See Plans) (Hidden)
Track 2 , Prime UAX = IP *
Track 2 , GCP Transmit Level = High (Set in Field)
Track 2 , Isl Frequency = 13.2 kHz (See Plans)

TEMPLATE: SSCC
SSCC-1 Number of GDs = 1 *
SSCC-2 Number of GPs = 1 *
SSCC-2 Number of GDs = 1 *
SSCC 1 , Lamp Neutral Test = Off (Set in Field)
SSCC 2 , Lamp Neutral Test = Off (Set in Field)

TEMPLATE: OOS
OOS Control = Display+OOS IPs *
T2 OOS Control = OOS Input 1 *

TEMPLATE: IP assignment 1
IN 1.1 = T1 Prime UAX *
IN 2.1 = T2 Prime UAX *

TEMPLATE: IP assignment SSCC
IN 7.2 = Not Used *
IN 8.2 = Out Of Service IP 1 *
IN 8.4 = GD 2.1 *
IN 8.5 = GP 2.1 *

GCP: track 1
Track 1 , Island Distance = 126 ft *

GCP: track 2
Track 2 , Island Distance = 126 ft *

ADVANCED: site options
Daylight Savings = On *

SSCC: 1
SSCC-1 Gate Delay = 5 sec *
SSCC 1 , Flash Rate = 55 *

SSCC: 2
SSCC-2 Gate Delay = 5 sec *
SSCC 2 , Flash Rate = 55 *

SEAR
DI 1 = Gnd Flt Tester 1 *
DI 2 = Gnd Flt Tester 2 *
Rly 1 = Ground Fault Test *
Rly 2 = AC Control *

SEAR: slot 7-8 inputs
IN 7.1 = TSS 1 *
IN 8.1 = TSS 2 *
IN 8.3 = POK 2 *

* Parameter is part of office check number calculation.

Check Numbers

Office Check No. (DT 4.6.0): 4EFA80AC
Office Check Number: 4EFA80AC
Config. Check Number: 4C7B7066
(Based on MCF Revision 021)

Parameters not part of office check number calculation:

Track 1 , GCP Frequency = 156 Hz
Track 1 , Approach Distance = 3564 ft
Track 1 , Prime Warning Time = 33 sec
Track 1 , Prmpt Warning Time = 45 sec (See Plans)
Track 1 , GCP Transmit Level = High
Track 1 , Isl Frequency = 11.5 kHz
Track 2 , GCP Frequency = 156 Hz
Track 2 , Approach Distance = 3564 ft
Track 2 , Prime Warning Time = 33 sec
Track 2 , Prmpt Warning Time = 45 sec (See Plans)
Track 2 , GCP Transmit Level = High
Track 2 , Isl Frequency = 13.2 kHz
SSCC 1 , Lamp Neutral Test = Off (Set in Field)
SSCC 2 , Lamp Neutral Test = Off (Set in Field)

Comments

<none>

NEW WORK
CXD1437248 IL2014043
04-25-15 XRL/O.MCIVER/
xorail

CSX TRANSPORTATION
RAIL TRANSPORT GROUP ENGINEERING
COMMUNICATIONS AND SIGNALS

BURNHAM AVE. 283193G

MINIMUM PROGRAM STEPS REPORT CWE-80
LANSING, IL M.P. DG-29.80

DESIGNED	DIGITIZED	CHECKED	DATE
XRL	XRL	XRL	04-25-15

DESIGN DATE	REV. NO.	DRAWING	SHEET NO	FILE	SHEET
04-25-15	1	-----	-----	DG02980	P01 A

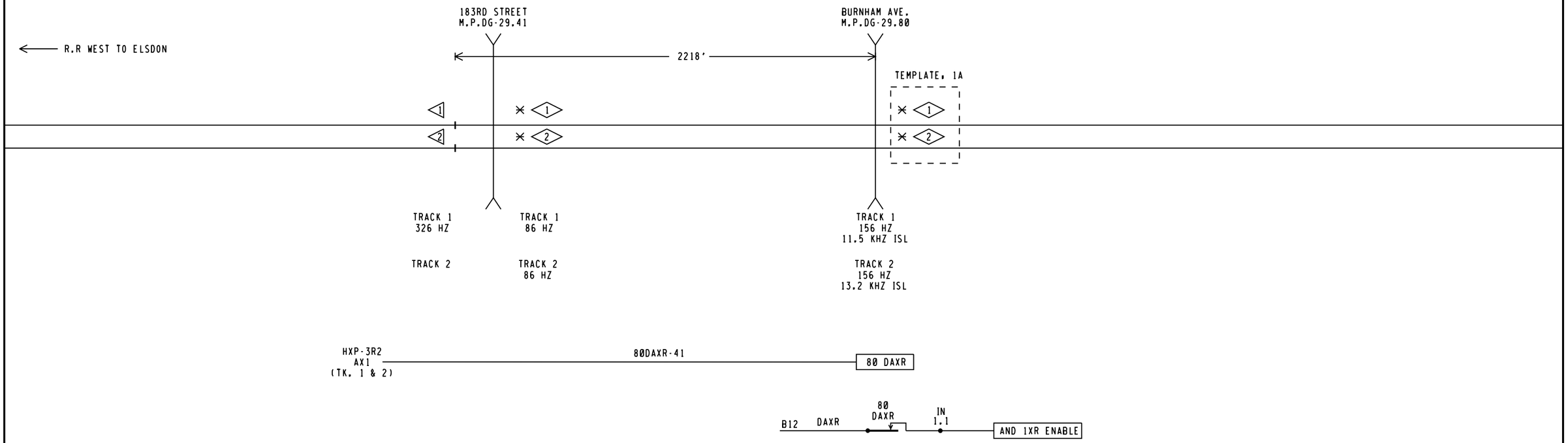

ALL OUT
THIS SHEET IS VOID
WHEN AS IN SERVICED.

CXD1437248 IL2014043
04-25-15 XRL/O.MCIVER/

xorail

SYMBOL	DEFINE	SYMBOL	DEFINE	SYMBOL	DEFINE	SYMBOL	DEFINE
◇	BI-DIRECTIONAL	▷	UNI-DIRECTIONAL		GCP 4000 UNIT	✕	ISLAND

CSX TRANSPORTATION
RAIL TRANSPORT GROUP ENGINEERING
COMMUNICATIONS AND SIGNALS

BURNHAM AVE. 283193G

INTERNAL SOFTWARE AND GATES LOGIC DIAGRAMS
LANSING, IL M.P. DG-29.80

DESIGNED	DIGITIZED	CHECKED	DATE
XRL/KSB	XRL/KSB	XRL	04-02-14

DESIGN DATE	REV. NO.	DRAWING	SHEET NO	FILE	SHEET
04-02-14	1	-----	-----	DG02980	G01

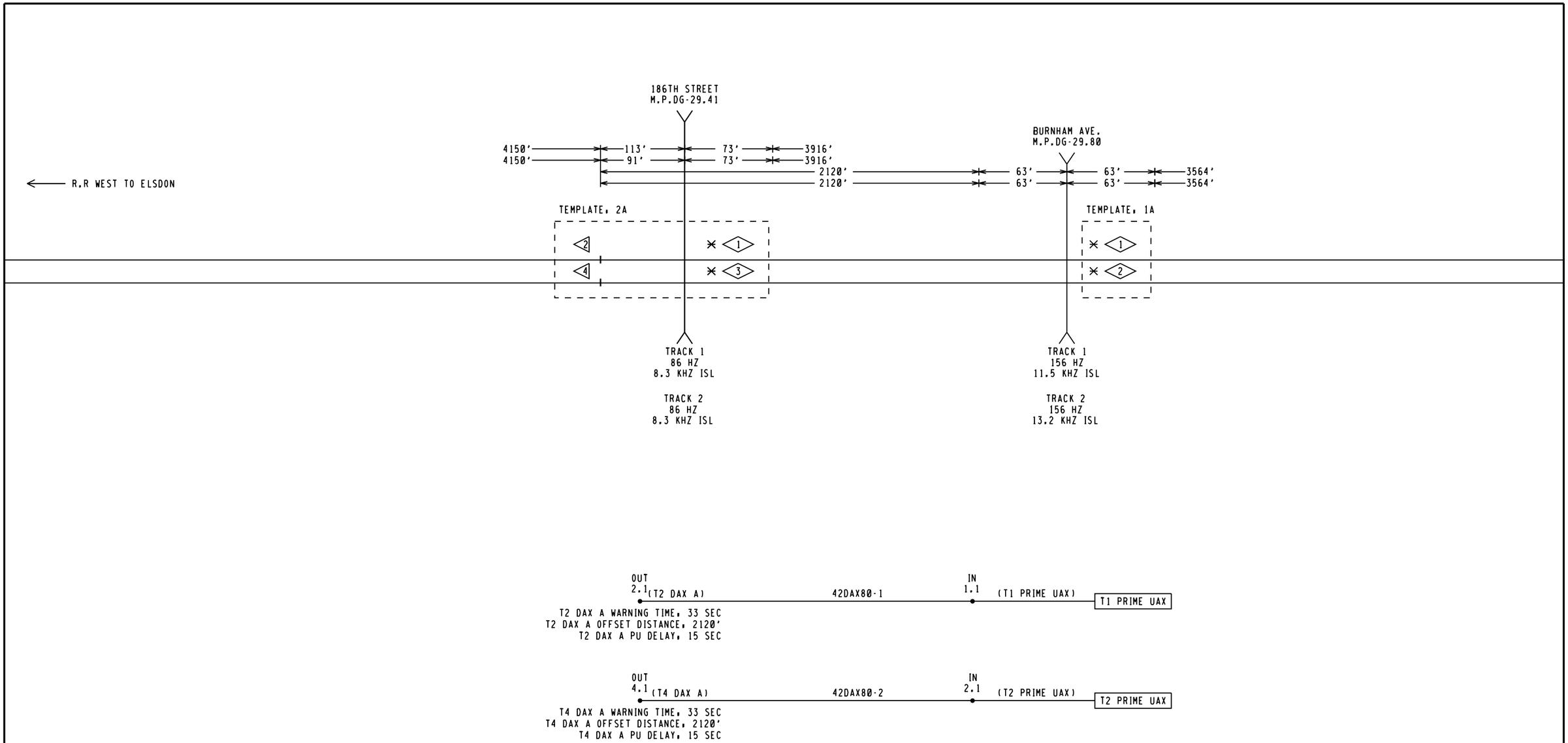

NEW WORK
CXD1437248 IL2014043
04-25-15 XRL/O.MCIVER/
xorail

SYMBOL	DEFINE
◇	BI-DIRECTIONAL

SYMBOL	DEFINE	SYMBOL	DEFINE	SYMBOL	DEFINE	SYMBOL	DEFINE	SYMBOL	DEFINE	SYMBOL	DEFINE	SYMBOL	DEFINE
◇	SIMULATED BI-DIRECTIONAL	▷	UNI-DIRECTIONAL		GCP 4000 UNIT	✳	ISLAND	UAX	SOFTWARE UAX INPUT	V	EXTERNAL VITAL AND GATE		INTERNAL SOFTWARE GATE -----

CSX TRANSPORTATION
RAIL TRANSPORT GROUP ENGINEERING
COMMUNICATIONS AND SIGNALS

BURNHAM AVE. 283193G

INTERNAL SOFTWARE AND GATES LOGIC DIAGRAMS
LANSING, IL M.P. DG-29.80

DESIGNED	DIGITIZED	CHECKED	DATE
XRL	XRL	XRL	04-25-15

DESIGN DATE	REV. NO.	DRAWING	SHEET NO	FILE	SHEET
04-25-15	2	-----	-----	DG02980	G01

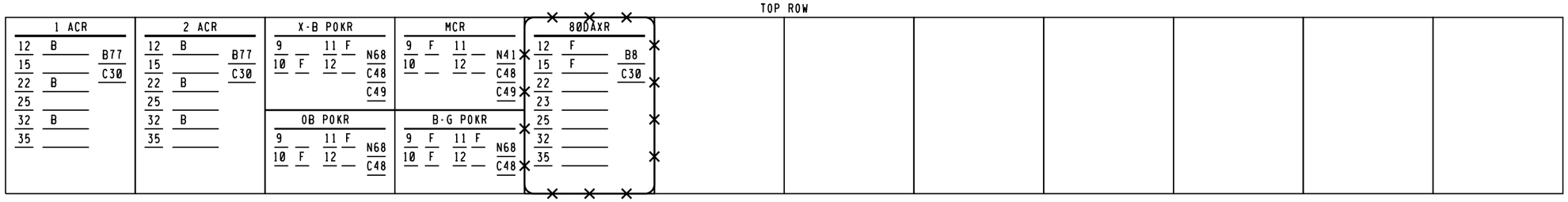

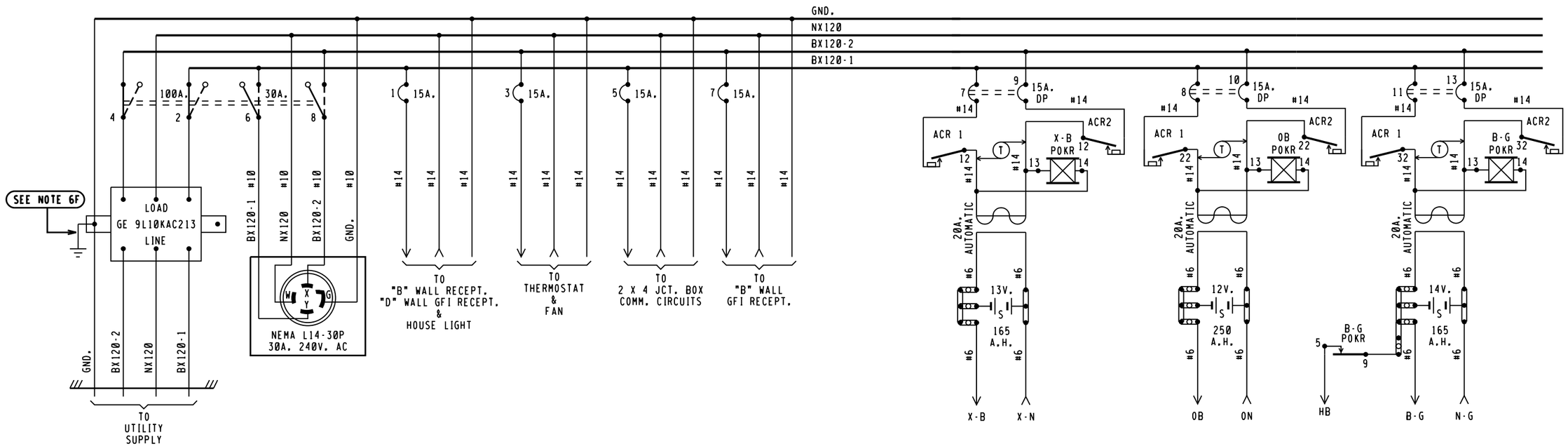

BX120-1	BX120-2
11.0 AMPS	11.0 AMPS

MAXIMUM LOAD
CALCULATED PER SS360

NOTES,

1 - REFERENCES ARE PER SCMS-13.
2 - ARRESTERS ARE PER SS382.
3 - SHELF RELAY PLACEMENT ON CONSIST CHART HAS NO SIGNIFICANCE.
4 - PLUG-IN RELAYS ARE VIEWED FROM THE FRONT OF RACK.
5 - BATTERY A.H. CAPACITY SHOWN IS THE MINIMUM REQUIREMENT.
6 - WIRING
  A - FEED TO ALL BUSSES, LIGHT CIRCUITS,MOTOR CIRCUITS TO BE #10 FLEX.
  B - 120-VOLT FEED FROM ENTRANCE TO POWER BUSS TO BE #10 FLEX.
  C - ALL TRACK WIRES TO BE #10 FLEX.
  D - ALL OTHERS TO BE #16 FLEX UNLESS NOTED.
  E - GROUND WIRE NOT NECESSARY WHEN GE ARRESTER IS MOUNTED ON GROUND PLANE OR METAL ENCLOSURE AFFIXED DIRECTLY TO BUNGALOW METALLIC STRUCTURAL MEMBER.
7 - CIRCUIT INTERRUPTERS 2 & 4 ARE MECHANICALLY INTERLOCKED WITH CIRCUIT INTERRUPTERS 6 & 8.
8 - CHARGERS TO BE WIRED FOR 240VAC
9 - CIRCUIT BREAKER PANEL-00116L125G (16 SPACES)

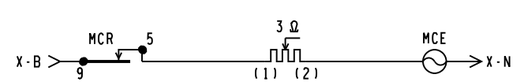

= IN
= OUT

CXD1437248
04-25-15

IL2014043
XRL/O.MCIVER/

xorail

6'X 6' PTC CROSSING HOUSE

CSX TRANSPORTATION
RAIL TRANSPORT GROUP ENGINEERING
COMMUNICATIONS AND SIGNALS

BURNHAM AVE. 283193G

POWER DISTRIBUTION
LANSING, IL M.P. DG-29.80

DESIGNED	DIGITIZED	CHECKED	DATE
XRL/KSB	XRL/KSB	XRL	04-02-14

04-25-15 02

DESIGN DATE	REV. NO.
04-02-14	1

DRAWING	SHEET NO	FILE	SHEET
-----	-----	DG02980	E01

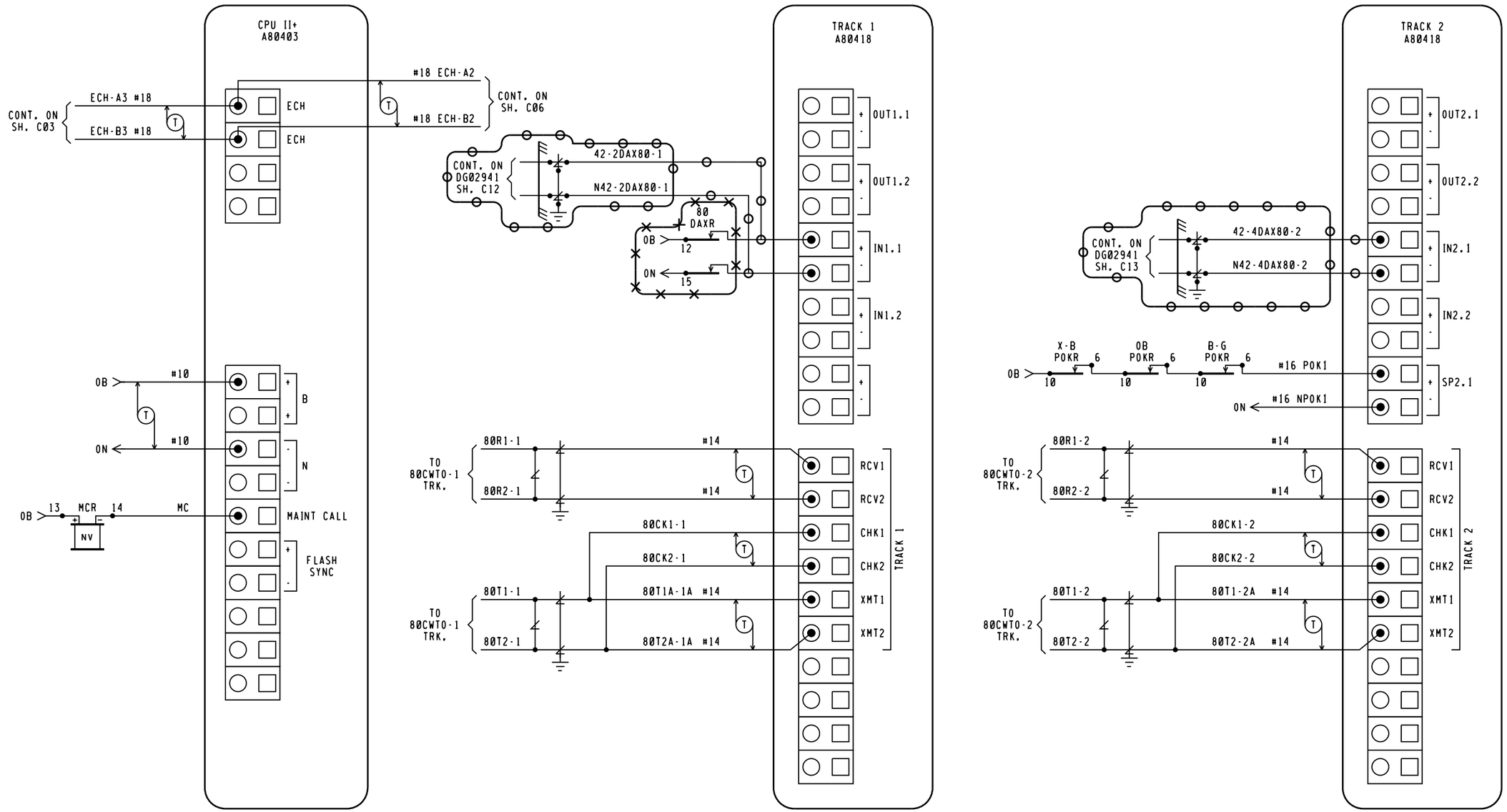

NOTE,

ECHELON CONNECTIONS NOT TO EXCEED 53' IN LENGTH AND TOTAL LENGTH COMBINED NOT TO EXCEED 430' WITH A MAXIMUM OF 8 NODES. RECOMMEND USE BELDEN WIRE CABLE #8461 OR EQUIVALENT.

= IN
= OUT

CXD1437248
04-25-15

IL2014043
XRL/O.MCIVER/

xorail

CSX TRANSPORTATION
RAIL TRANSPORT GROUP ENGINEERING
COMMUNICATIONS AND SIGNALS

BURNHAM AVE. 283193G

DETECTION CIRCUITRY CWE-80
LANSING, IL M.P. DG-29.80

DESIGNED	DIGITIZED	CHECKED	DATE
XRL/KSB	XRL/KSB	XRL	04-02-14

DESIGN DATE	REV. NO.	DRAWING	SHEET NO	FILE	SHEET
04-02-14	1	-----	-----	DG02980	C02

04-25-15 02

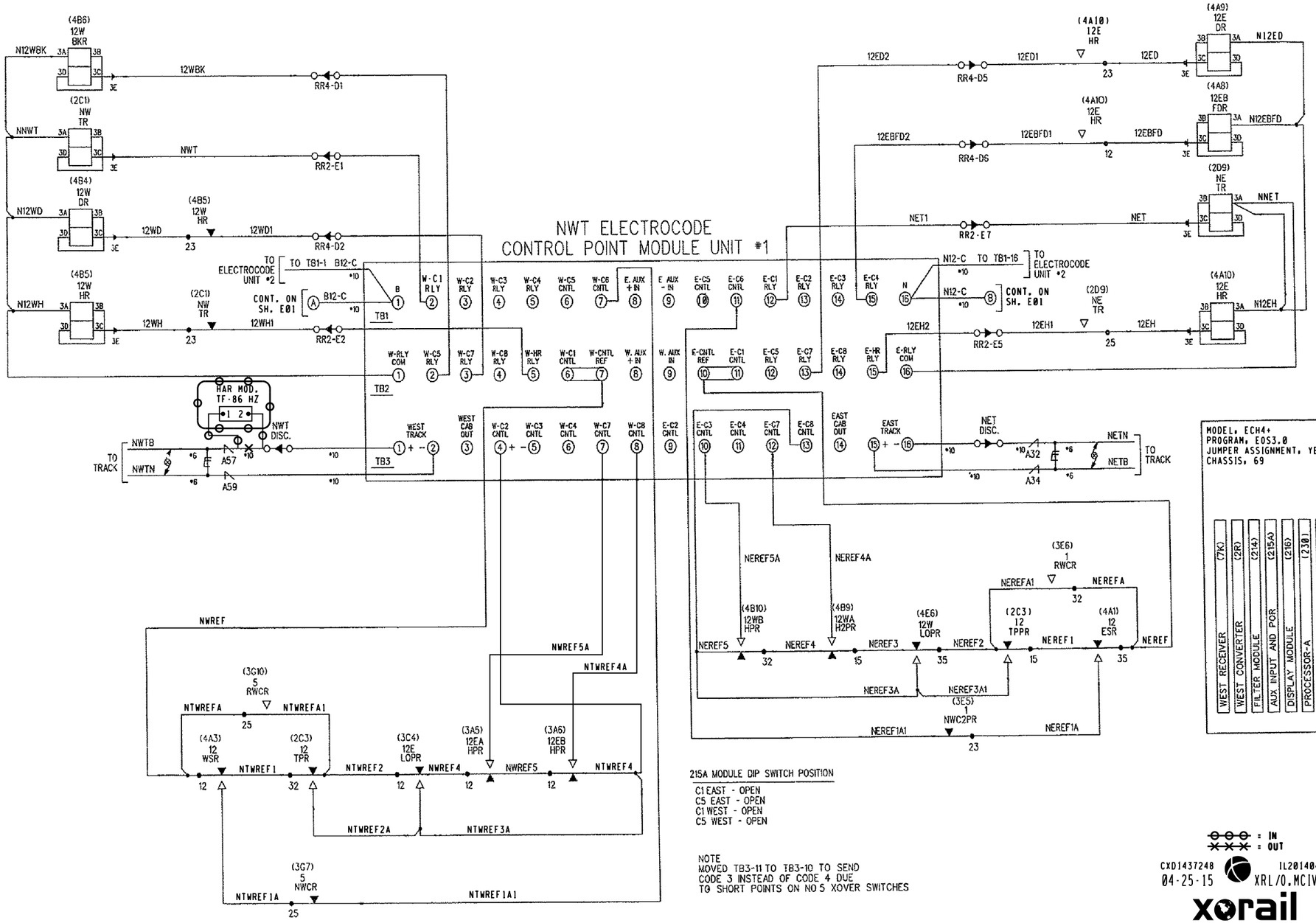

215A MODULE DIP SWITCH POSITION

C1 EAST - OPEN
C5 EAST - OPEN
C1 WEST - OPEN
C5 WEST - OPEN

NOTE
MOVED TB3-11 TO TB3-10 TO SEND
CODE 3 INSTEAD OF CODE 4 DUE
TO SHORT POINTS ON NO 5 XOVER SWITCHES

REVISIONS	
03-01-01 JKR	AS IN SERVICE
05-02-02 CFM	CORRECTIONS
05-03-02 LDD	COMPLETE DETAIL CHECK
08-24-04 JKR	AS IN SERVICE
09-25-14 VECTOR CREATED BY XRL	IL2014028

CSX TRANSPORTATION
RAIL TRANSPORT GROUP ENGINEERING
COMMUNICATIONS AND SIGNALS

MUNSTER

NWT ELECTROCODE UNIT #1 HOOK UP & CONTROL CIRCUITS
MUNSTER, IN M.P. DG-31.07

DESIGNED	DIGITIZED	CHECKED	DATE
CSX	XRL	CSX	09-25-14

DRAWING	SHEET NO	NEXT SH	NEXT FILE	NEXT SH	FILE	SHEET
.....	.....	.....	DG03107	C04	DG03107	C03

RASTER FILE, DG03107C03.CIT

MS FILE, DG03107.C03

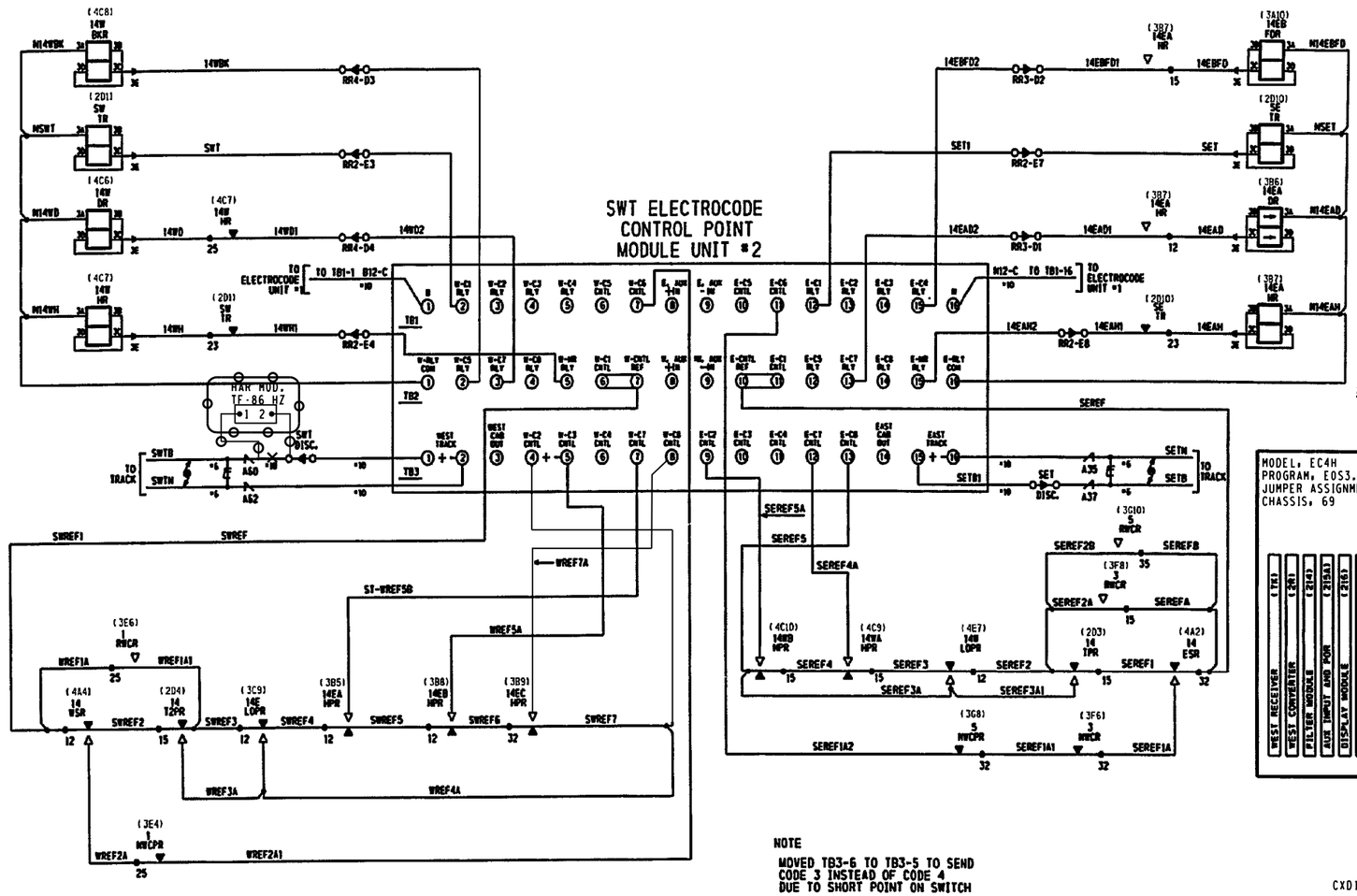

REVISIONS	
03-01-01 JKR	AS IN SERVICE
05-02-02 CFM	CORRECTIONS
05-03-02 LDD	COMPLETE DETAIL CHECK
08-24-04 JKR	AS IN SERVICE
09-25-14 VECTOR CREATED BY XRL	IL2014028

CSX TRANSPORTATION
RAIL TRANSPORT GROUP ENGINEERING
COMMUNICATIONS AND SIGNALS

MUNSTER

SWT ELECTROCODE UNIT #2 HOOK UP & CONTROL CIRCUITS
MUNSTER, IN M.P. DG-31.07

DESIGNED	DIGITIZED	CHECKED	DATE
CSX	XRL	CSX	09-25-14

DRAWING	SHEET NO	NEXT SH	NEXT FILE	NEXT SH	FILE	SHEET
.....	.....	.....	DG03107	C05	DG03107	C04

RASTER FILE: DG03107C04.CIT MS FILE: DG03107.C04