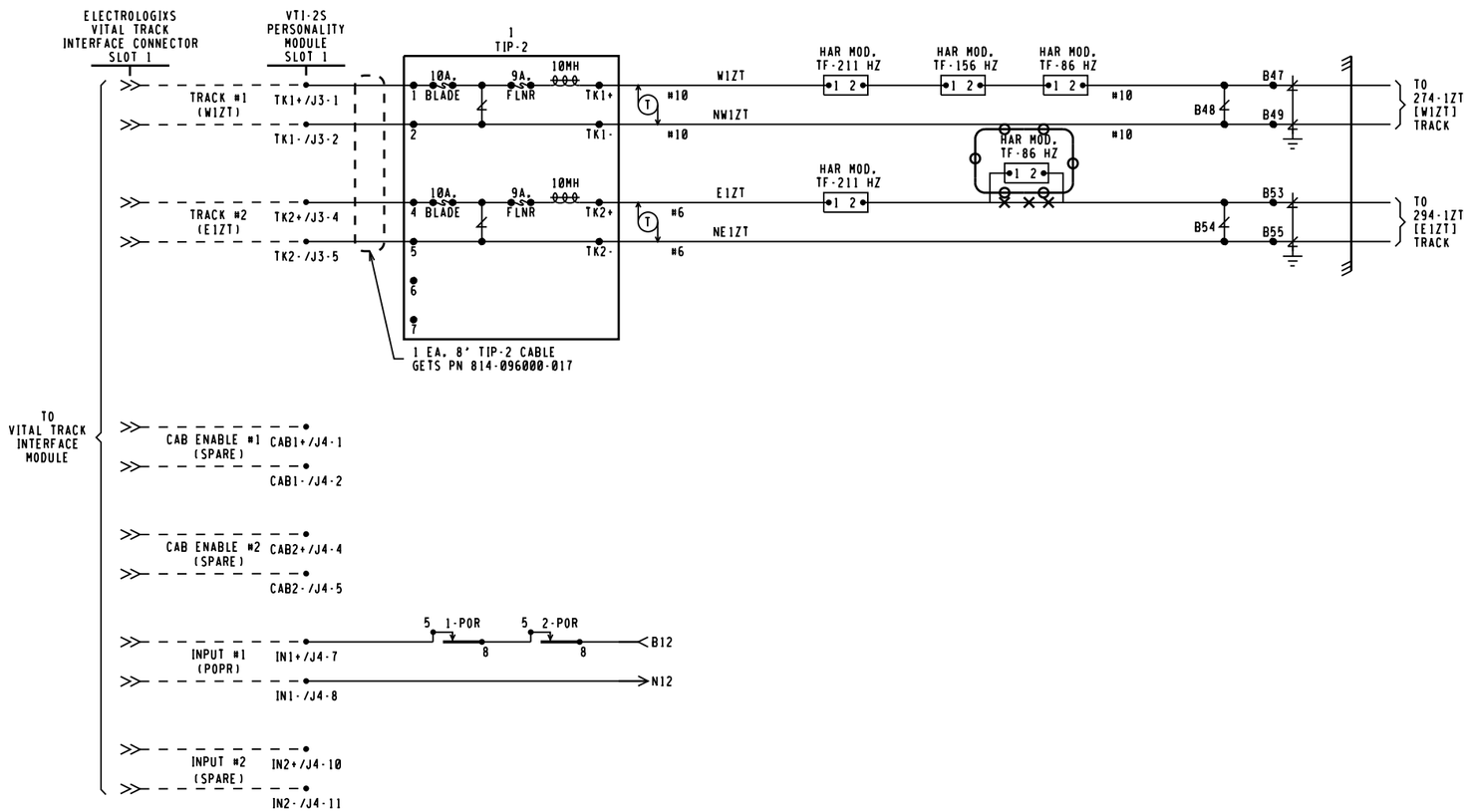

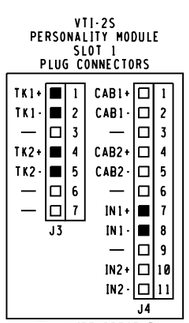

: IN
: OUT

CXD1437248 IL2014043
04-25-15 XRL/O.MCIVER/

xorail

NOTES:

1. ---- = INTERNAL CONNECTION
2. [ ] = TAGGING PURPOSE ONLY
3. POK INPUT PROGRAMMED TO ACTIVATE CODE 10 ON BOTH TRACKS.

TRACK 1

REVISIONS	
09-25-14 XRL	IL2014028

CSX TRANSPORTATION
RAIL TRANSPORT GROUP ENGINEERING
COMMUNICATIONS AND SIGNALS

VOLBRECHT RD 283186W

& SIGNALS 273/274 & 275/276
ELECTROLOGIXS TRACK CIRCUITS
OAK GLEN, IL M.P. DG-27.45

DESIGNED	DIGITIZED	CHECKED	DATE
XRL	XRL	XRL	05-14-14

DRAWING	SHEET NO	NEXT SH	NEXT FILE	NEXT SH	FILE	SHEET
.....	.....	.....	DG02749	C03	DG02749	C02

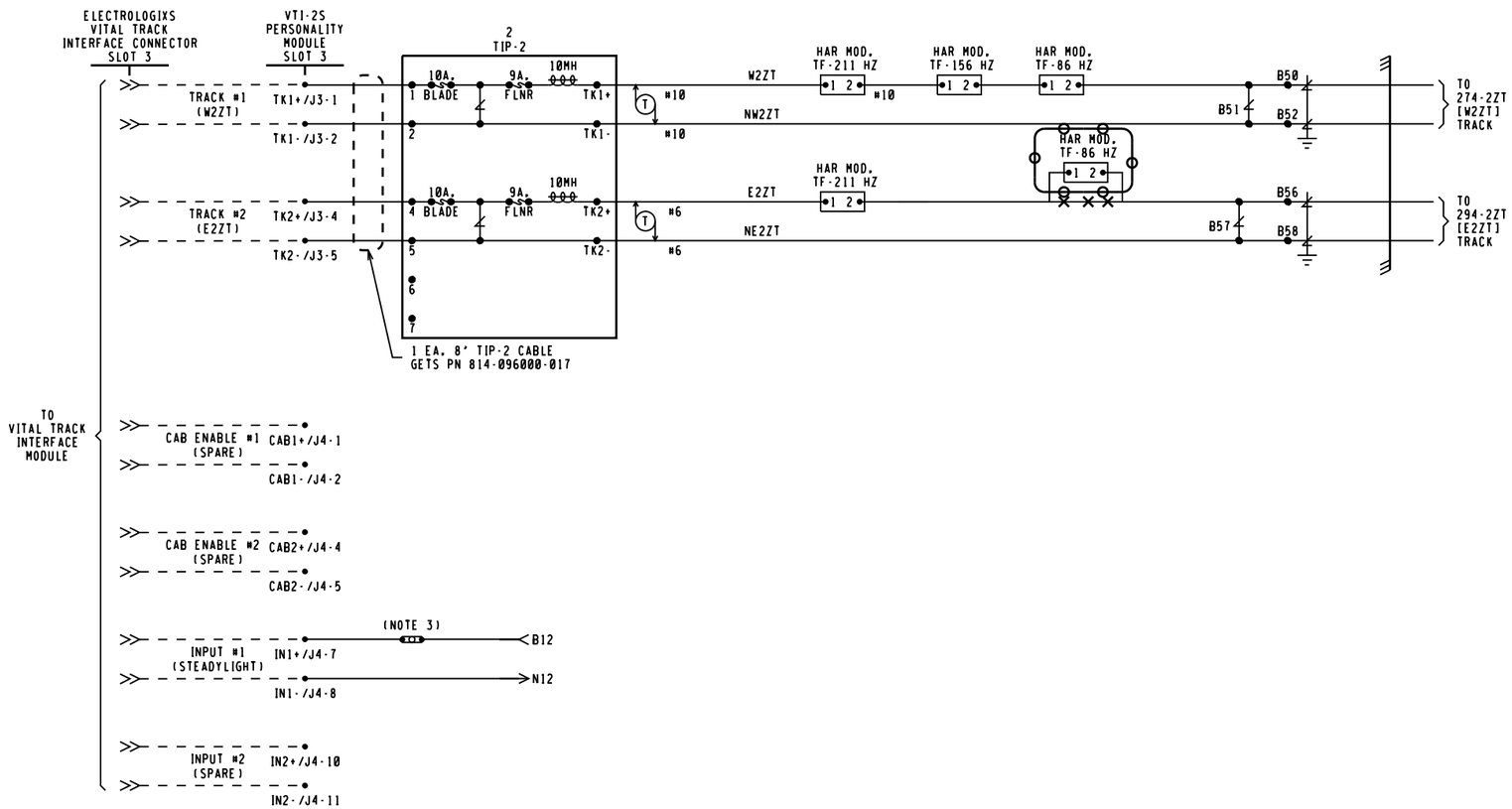

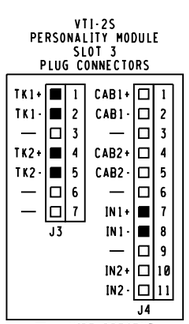

⊖⊖⊖ : IN
✕✕✕ : OUT

CXD1437248 IL2014043
04-25-15 XRL/O.MCIVER/

xorail

NOTES:

1. ···· = INTERNAL CONNECTION
2. [ ] = TAGGING PURPOSE ONLY
3. CLOSE TEST NUT FOR STEADY LIGHTING WITH POWER OFF INPUT HIGH, OPEN TEST NUT FOR APPROACH LIGHTING.

TRACK 2

REVISIONS	
09-25-14 XRL	IL2014028

CSX TRANSPORTATION
RAIL TRANSPORT GROUP ENGINEERING
COMMUNICATIONS AND SIGNALS

VOLBRECHT RD 283186W

& SIGNALS 273/274 & 275/276
ELECTROLOGIXS TRACK CIRCUITS
OAK GLEN, IL M.P. DG-27.45

DESIGNED	DIGITIZED	CHECKED	DATE
XRL	XRL	XRL	05-14-14

DRAWING	SHEET NO	NEXT SH	NEXT FILE	NEXT SH	FILE	SHEET
.....	.....	.....	DG02749	C05	DG02749	C04

INDEX

CONTENTS

SH. NO.		REVISION NO. 1	2	3	4	5	6	7	8	9
I01	INDEX AND REVISIONS	X	∅							
S01	TRACK AND SIGNAL PLAN	X	∅							
P01	MINIMUM PROGRAM STEPS REPORT CWE-65	X								
E01	POWER DISTRIBUTION	X								
C01	DETECTION DEVICE CONSIST CWE-65	X								
C02	DETECTION CIRCUITRY CWE-65	X								
C03	DETECTION CIRCUITRY CWE-65	X								
C04	CROSSING WARNING DEVICE GATE CIRCUITRY	X								
C05	CROSSING WARNING DEVICE LIGHT CIRCUITRY	X								
C06	CROSSING WARNING DEVICE CIRCUITRY	X								
C07	SEAR II1 CONFIGURATION & FUNCTIONS	X								

X = PLANS SENT TO FIELD (DISTRIBUTED)

X = PLANS AS-IN-SERVICED (UP TO DATE)

= NOTE

= IN

= OUT

CXD1437248 IL2014043

04-25-15 XRL/O.MCIVER/

xorail

REVISIONS

REV. NO.	PROJECT NO.	DESIGN DATE	IN SERVICE DATE	REVISION DATE
1	IL2014006	04-04-14	02-24-15	03-12-15
2	IL2014043	04-25-15		

TO BE COMPLETED ON A.I.S.

CSX TRANSPORTATION

RAIL TRANSPORT GROUP ENGINEERING
COMMUNICATIONS AND SIGNALS

TORRENCE AVE 283190L

INDEX AND REVISIONS
LANSING, IL M.P. DG-28.65

DESIGNED	DIGITIZED	CHECKED	DATE
XRL/KSB	XRL/KSB	XRL	04-04-14
DRAWING	SHEET NO	FILE	SHEET
-----	-----	DG02865	I01

04-25-15 02

DESIGN DATE	REV. NO.
04-04-14	1

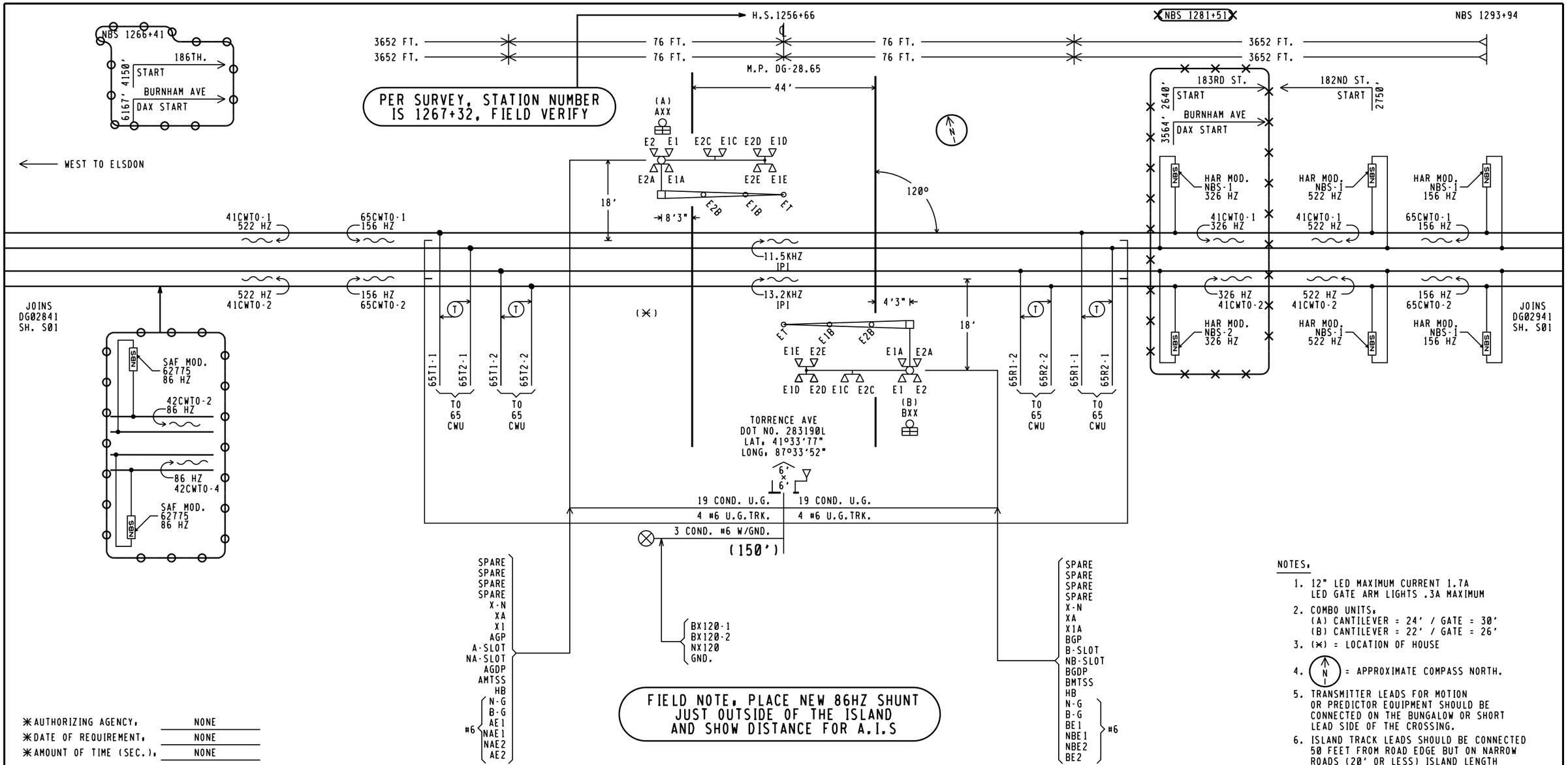

NOTES:

1. 12" LED MAXIMUM CURRENT 1.7A LED GATE ARM LIGHTS .3A MAXIMUM
2. COMBO UNITS:
   (A) CANTILEVER = 24' / GATE = 30'
   (B) CANTILEVER = 22' / GATE = 26'
3. (✳) = LOCATION OF HOUSE
4. (N) = APPROXIMATE COMPASS NORTH.
5. TRANSMITTER LEADS FOR MOTION OR PREDICTOR EQUIPMENT SHOULD BE CONNECTED ON THE BUNGALOW OR SHORT LEAD SIDE OF THE CROSSING.
6. ISLAND TRACK LEADS SHOULD BE CONNECTED 50 FEET FROM ROAD EDGE BUT ON NARROW ROADS (20' OR LESS) ISLAND LENGTH SHALL BE 120 FEET.
7. WARNING SYSTEM APPROACH CIRCUIT DISTANCES ARE TO BE MEASURED FROM THE ISLAND TRACK CONNECTIONS.

✳AUTHORIZING AGENCY: NONE
✳DATE OF REQUIREMENT: NONE
✳AMOUNT OF TIME (SEC.): NONE

APPROACH LENGTHS TABLE DC, AFO, TYPE C, MOTION, CWT, OR OTHER	WESTWARD ML1 CWT	EASTWARD ML1 CWT	WESTWARD ML2 CWT	EASTWARD ML2 CWT
STANDARD MINIMUM WARNING TIME IN SECONDS	25	25	25	25
ROADWAY GATE TIME IN SECONDS	5	5	5	5
CLEARANCE TIME IN SECONDS	4	4	4	4
DOT TRAFFIC LIGHT SIMULTANEOUS PREEMPT TIME IN SECONDS✳	0	0	0	0
DESIGNED WARNING TIME FOR TRAINS AT TIME TABLE SPEED	34 SEC.	34 SEC.	34 SEC.	34 SEC.
DOT TRAFFIC LIGHT ADVANCE PREEMPT TIME IN SECONDS ✳	0	0	0	0
CONTROL EQUIPMENT DECISION TIME IN SECONDS	5	5	5	5
DESIGNED DETECTION TIME FOR TRAINS AT TIME TABLE SPEED	39 SEC.	39 SEC.	39 SEC.	39 SEC.
TIME TABLE MAXIMUM TRAIN SPEED IN MILES PER HOUR	60	60	60	60
BUFFER SPEED IN MILES PER HOUR	5	5	5	5
TOTAL WARNING SYSTEM DESIGN SPEED IN MILES PER HOUR	65	65	65	65
APPROACH DISTANCE TO ISLAND EDGE IN FEET	3652	3652	3652	3652
HALF WIDTH OF ISLAND IN FEET	76	76	76	76
APPROXIMATE MILE POSTS FOR APPROACH CIRCUIT	27.94	29.36	27.94	29.36

= NOTE
= IN
= OUT

CXD1437248 04-25-15 IL2014043 XRL/O.MCIVER/

xorail

CSX TRANSPORTATION
RAIL TRANSPORT GROUP ENGINEERING
COMMUNICATIONS AND SIGNALS

TORRENCE AVE 283190L

TRACK AND SIGNAL PLAN
LANSING, IL M.P. DG-28.65

DESIGNED	DIGITIZED	CHECKED	DATE
XRL/KSB	XRL/KSB	XRL	04-04-14

04-25-15 02

DESIGN DATE	REV. NO.	DRAWING	SHEET NO	FILE	SHEET
04-04-14	1	-----	-----	DG02865	S01

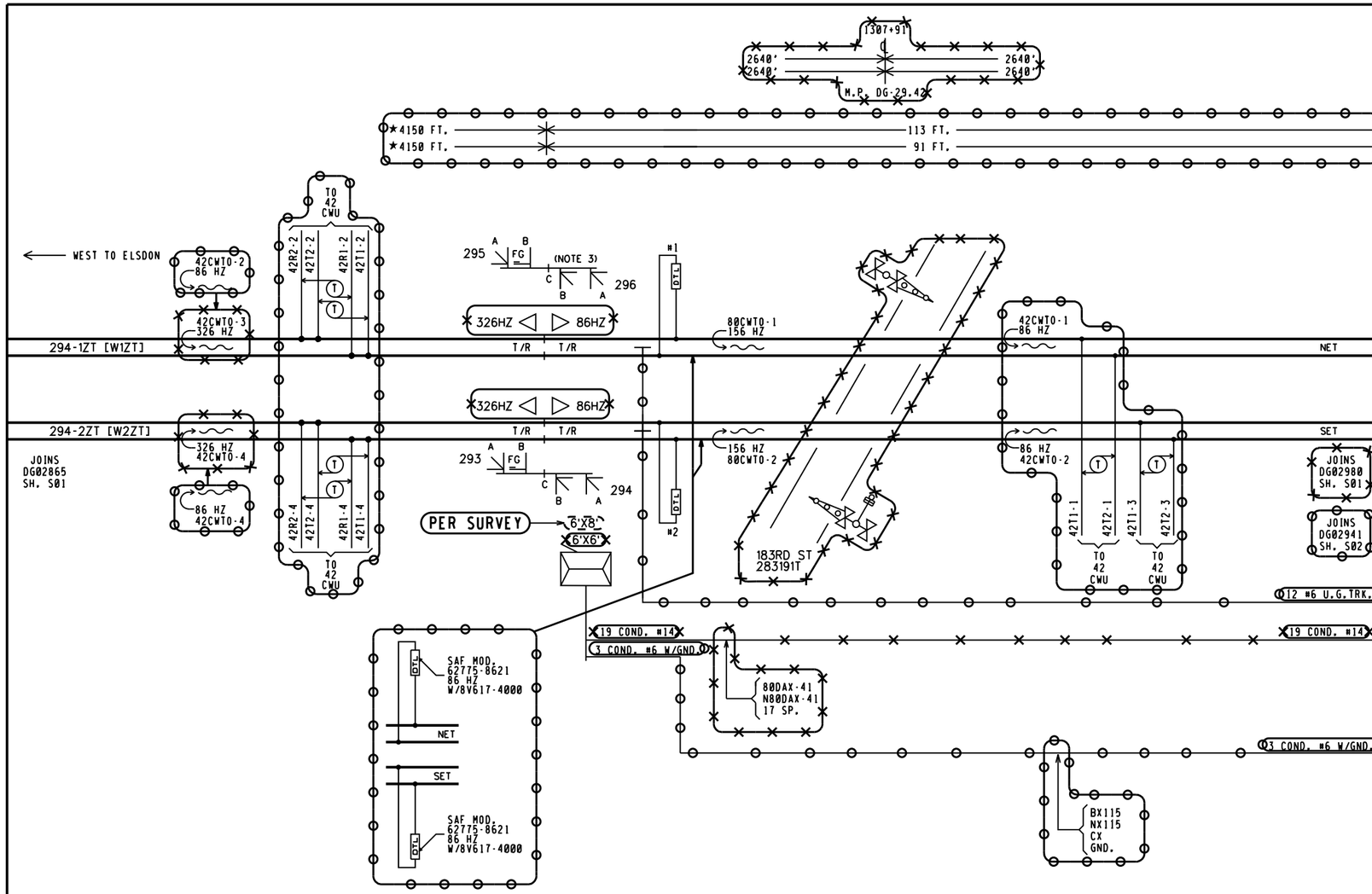

REVISIONS	
08-12-96 NST	
09-25-14 XRL	IL2010010, IL2010010A IL2014028
03-12-15 XRL	IL2014006

NOTES:

1. DUMMY LOAD #1 & #2 ARE SAFETRAN MODEL 62775-1543, 156 HZ, W/8V617-1600.
2. ★ = APPROACH DISTANCE IS LONGER THAN CALCULATED APPROACH DUE TO SHUNT FALLING WITHIN ISLAND OF TORRENCE AVE. DOT NO. 283190L CROSSING

= EXISTING
= IN
= OUT

CXD1437248 IL2014043
04-25-15 XRL/O.MCIVER/

xorail

CSX TRANSPORTATION
RAIL TRANSPORT GROUP ENGINEERING
COMMUNICATIONS AND SIGNALS

SIGNALS 293/294/295/296 &

183RD ST 283191T
TRACK AND SIGNAL PLAN
LANSING, IL M.P. DG-29.41

DESIGNED	DIGITIZED	CHECKED	DATE
XRL	XRL	CSX	09-25-14

DRAWING	SHEET NO	NEXT SH	NEXT FILE	NEXT SH	FILE	SHEET
.....	.....	.....	DG02941	P01 S02	DG02941	S01

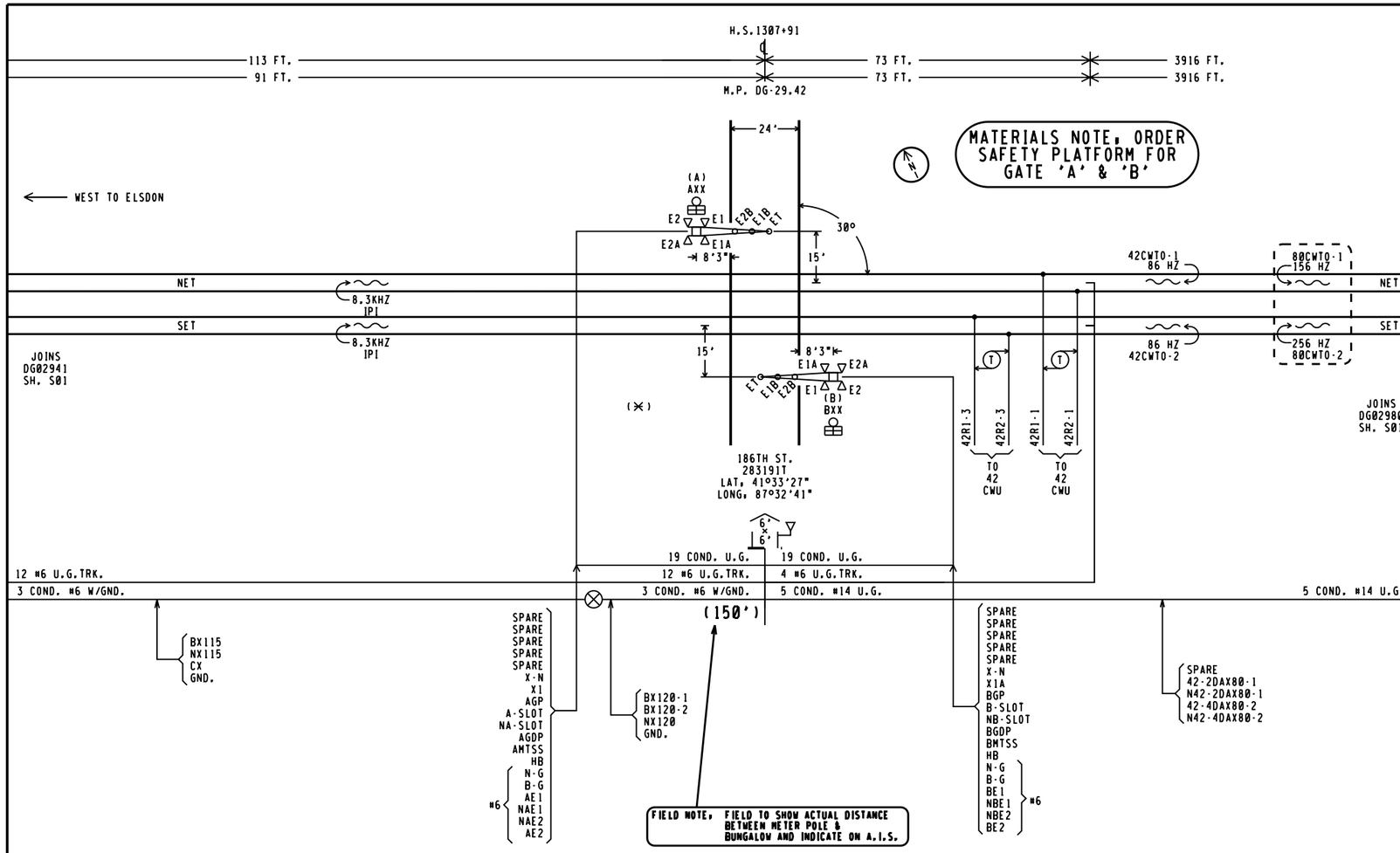

APPROACH LENGTHS TABLE DC, AFO, TYPE C, MOTION, CWT, OR OTHER	WESTWARD TRACK 1 CWT	EASTWARD TRACK 1 CWT	WESTWARD TRACK 2 CWT	EASTWARD TRACK 2 CWT
STANDARD MINIMUM WARNING TIME IN SECONDS	25	25	25	25
ROADWAY GATE TIME IN SECONDS	5	5	5	5
CLEARANCE TIME IN SECONDS	7	7	7	7
DOT TRAFFIC LIGHT SIMULTANEOUS PREEMPT TIME IN SECONDS ✱	0	0	0	0
DESIGNED WARNING TIME FOR TRAINS AT TIME TABLE SPEED	37 SEC.	37 SEC.	37 SEC.	37 SEC.
DOT TRAFFIC LIGHT ADVANCE PREEMPT TIME IN SECONDS ✱	0	0	0	0
CONTROL EQUIPMENT DECISION TIME IN SECONDS	5	5	5	5
DESIGNED DETECTION TIME FOR TRAINS AT TIME TABLE SPEED	42 SEC.	42 SEC.	42 SEC.	42 SEC.
TIME TABLE MAXIMUM TRAIN SPEED IN MILES PER HOUR	60	60	60	60
BUFFER SPEED IN MILES PER HOUR	5	5	5	5
TOTAL WARNING SYSTEM DESIGN SPEED IN MILES PER HOUR	65	65	65	65
APPROACH DISTANCE TO ISLAND EDGE IN FEET	3916	3916	3916	3916
HALF WIDTH OF ISLAND IN FEET	113	73	91	73
APPROXIMATE MILE POSTS FOR APPROACH CIRCUIT	28.66	30.16	28.66	30.16

✱AUTHORIZING AGENCY, NONE
✱DATE OF REQUIREMENT, NONE
✱AMOUNT OF TIME (SEC.), NONE

: EXISTING
: NOTE

NEW WORK
CXD1437248 IL2014043
04-25-15 XRL/O.MCIVER/
xorail

NOTES,

1. 12" LED MAXIMUM CURRENT 1.0A LED GATE ARM LIGHTS .3A MAXIMUM
2. GATE LENGTH (A) 21' (B) 21'
3. (✱) = LOCATION OF CROSSING HOUSE
4. (N) = APPROXIMATE COMPASS NORTH.
5. TRANSMITTER LEADS FOR MOTION OR PREDICTOR EQUIPMENT SHOULD BE CONNECTED ON THE BUNGALOW OR SHORT LEAD SIDE OF THE CROSSING.
6. ISLAND TRACK LEADS SHOULD BE CONNECTED 50 FEET FROM ROAD EDGE BUT ON NARROW ROADS (20' OR LESS) ISLAND LENGTH SHALL BE 120 FEET.
7. WARNING SYSTEM APPROACH CIRCUIT DISTANCES ARE TO BE MEASURED FROM THE ISLAND TRACK CONNECTIONS.
8. ★ = APPROACH DISTANCE IS LONGER THAN CALCULATED APPROACH DUE TO SHUNT FALLING WITHIN ISLAND OF TORRENCE AVE. DOT NO. 283190L CROSSING

REVISIONS

CSX TRANSPORTATION
RAIL TRANSPORT GROUP ENGINEERING
COMMUNICATIONS AND SIGNALS

SIGNALS 293/294/295/296
186TH ST 283191T
TRACK AND SIGNAL PLAN
LANSING, IL M.P. DG-29.41

DESIGNED	DIGITIZED	CHECKED	DATE
XRL	XRL	XRL	04-25-15

DRAWING	SHEET NO	NEXT SH	NEXT FILE	NEXT SH	FILE	SHEET
.....	.....	.....	DG02941	P01	DG02941	S02

OFFICE SETTINGS

ITEM	SETTING
SITE ID	SIGNALS 293, 294, 295, & 296
CHASSIS ID	41

VITAL APPLICATION INFORMATION

ITEM	SETTING
NAME	INT293V
INDEX	001
EPT CRC	9670
EPT CHECKSUM	EA79

TRACK 1 VITAL SELECTION SETTINGS

SETT.	BIT NAME	TRUE	FALSE	BIT MEANING	
1	N_W1MCODE	X		TRUE IF MAINTENANCE CODE WILL BE RECEIVED FROM THE NORTH/WEST AND WILL BE PASSED SOUTH/EAST. FALSE IF NO MAINTENANCE CODE IS RECEIVED FROM THE NORTH/WEST AND IT IS TO BE INITIATED TO THE SOUTH/EAST.	X
2	S_E1MCODE		X	TRUE IF MAINTENANCE CODE WILL BE RECEIVED FROM THE SOUTH/EAST AND WILL BE PASSED NORTH/WEST. FALSE IF NO MAINTENANCE CODE IS RECEIVED FROM THE SOUTH/EAST AND IT IS TO BE INITIATED TO THE NORTH/WEST.	X
3	N_W1C1SW	X		(FOR SETTING, SEE CHART BELOW)	X
4	N_W1C5SW		X	(FOR SETTING, SEE CHART BELOW)	X
5	S_E1C1SW	X		(FOR SETTING, SEE CHART BELOW)	X
6	S_E1C5SW		X	(FOR SETTING, SEE CHART BELOW)	X
7	STEADY LIGHT		X	TRUE FOR STEADY LIGHTING WITH P.O. INPUT HIGH. FALSE FOR APPROACH LIGHTING.	X
8	N_WLOK_POK	X		SETTING 8 TRUE AND SETTING 9 FALSE MAINTENANCE CODE FOR BLOCK LAMP-OUT INDICATION WILL BE TRANSMITTED INTO THE NORTH/WEST TRACK AND BLOCK POWER-OFF INDICATION WILL BE TRANSMITTED INTO THE SOUTH/EAST TRACK. IF BOTH SETTING ARE TRUE OR BOTH FALSE NO MAINTENANCE CODE WILL BE TRANSMITTED IN EITHER DIRECTION.	X
9	S_ELOK_POK		X	SETTING 8 FALSE AND SETTING 9 TRUE MAINTENANCE CODE FOR BLOCK LAMP-OUT INDICATION WILL BE TRANSMITTED INTO THE SOUTH/EAST TRACK AND BLOCK POWER-OFF INDICATION WILL BE TRANSMITTED INTO THE NORTH/WEST TRACK. IF BOTH SETTING ARE TRUE OR BOTH FALSE NO MAINTENANCE CODE WILL BE TRANSMITTED IN EITHER DIRECTION.	X

TRACK 2 VITAL SELECTION SETTINGS

SETT.	BIT NAME	TRUE	FALSE	BIT MEANING	
10	N_W2MCODE	X		TRUE IF MAINTENANCE CODE WILL BE RECEIVED FROM THE NORTH/WEST AND WILL BE PASSED SOUTH/EAST. FALSE IF NO MAINTENANCE CODE IS RECEIVED FROM THE NORTH/WEST AND IT IS TO BE INITIATED TO THE SOUTH/EAST.	X
11	S_E2MCODE		X	TRUE IF MAINTENANCE CODE WILL BE RECEIVED FROM THE SOUTH/EAST AND WILL BE PASSED NORTH/WEST. FALSE IF NO MAINTENANCE CODE IS RECEIVED FROM THE SOUTH/EAST AND IT IS TO BE INITIATED TO THE NORTH/WEST.	X
12	N_W2C1SW	X		(FOR SETTING, SEE CHART BELOW)	X
13	N_W2C5SW		X	(FOR SETTING, SEE CHART BELOW)	X
14	S_E2C1SW	X		(FOR SETTING, SEE CHART BELOW)	X
15	S_E2C5SW		X	(FOR SETTING, SEE CHART BELOW)	X

GFD-1 SETTINGS

ITEM	SETTING	
BATTERY 1 NAME	B-1	X
BATTERY 1 FAULT STATUS	NO FAULT	X
BATTERY 1 CALIBRATED VOLTAGE	13.5	X
BATTERY 1 GROUND FAULT THRESHOLD	8	X
BATTERY 1 GROUND FAULT TIME	30	X
BATTERY 1 LOW BATTERY ALARM VOLTAGE	8.0	X
BATTERY 1 HIGH BATTERY ALARM VOLTAGE	16.5	X
BATTERY 2 NAME	NONE	X
BATTERY 2 FAULT STATUS	NO FAULT	X
BATTERY 2 CALIBRATED VOLTAGE	13.5	X
BATTERY 2 GROUND FAULT THRESHOLD	8	X
BATTERY 2 GROUND FAULT TIME	30	X
BATTERY 2 LOW BATTERY ALARM VOLTAGE	8.0	X
BATTERY 2 HIGH BATTERY ALARM VOLTAGE	16.5	X
BATTERY 3 NAME	NONE	X
BATTERY 3 FAULT STATUS	NO FAULT	X
BATTERY 3 CALIBRATED VOLTAGE	13.5	X
BATTERY 3 GROUND FAULT THRESHOLD	8	X
BATTERY 3 GROUND FAULT TIME	30	X
BATTERY 3 LOW BATTERY ALARM VOLTAGE	8.0	X
BATTERY 3 HIGH BATTERY ALARM VOLTAGE	16.5	X

CHART FOR SETTING CODE 5

SETTING COMBINATION	RESULTANT
N_WC1SW - TRUE AND N_WC5SW - FALSE	CODE 1 IN SOUTH/EAST, CODE 5 OUT NORTH/WEST
N_WC1SW - FALSE AND N_WC5SW - TRUE	CODE 5 IN SOUTH/EAST, CODE 5 OUT NORTH/WEST
N_WC1SW - FALSE AND N_WC5SW - FALSE	CODE 5 NOT TRANSMITTED NORTH/WEST
N_WC1SW - TRUE AND N_WC5SW - TRUE	CODE 5 TRANSMITTED NORTH/WEST CONTINUOUSLY
S_EC1SW - TRUE AND S_EC5SW - FALSE	CODE 1 IN NORTH/WEST, CODE 5 OUT SOUTH/EAST
S_EC1SW - FALSE AND S_EC5SW - TRUE	CODE 5 IN NORTH/WEST, CODE 5 OUT SOUTH/EAST
S_EC1SW - FALSE AND S_EC5SW - FALSE	CODE 5 NOT TRANSMITTED SOUTH/EAST
S_EC1SW - TRUE AND S_EC5SW - TRUE	CODE 5 TRANSMITTED SOUTH/EAST CONTINUOUSLY

: IN
: OUT

CXD1437248 IL2014043
04-25-15 XRL/O.MCIVER/
xorail

NOTES:

1. X = STATUS SET/CHANGED USING THE CDU-1, ALL OTHERS SET IN THE ACE PROGRAM.
2. LOK-POK SETTINGS ARE FOR BOTH TRACKS.

REVISIONS	
09-25-14 XRL	IL2014028

CSX TRANSPORTATION
RAIL TRANSPORT GROUP ENGINEERING
COMMUNICATIONS AND SIGNALS

SIGNALS 293/294/295/296

D186TH X183RD ST 283191T
ELECTROLOGIXS PROGRAM
LANSING, IL M.P. DG-29.41

DESIGNED	DIGITIZED	CHECKED	DATE
XRL	XRL	XRL	05-14-14

DRAWING	SHEET NO	NEXT SH	NEXT FILE	NEXT SH	FILE	SHEET
.....	.....	.....	DG02941	X E01 / D P02	DG02941	P01

Minimum Program Steps Report

Location and SIN

DOT Number: 283191T
Milepost Number: DG-29.42
Site Name: 186TH ST

SIN: 712530801016 *

* Parameter is part of office check number calculation.

MCF and Template Selection

MCF Name: GCP-T6X-02-6.mcf
MCF Revision: 26
MCFCRC: 494D2656

Template = 2A,4 Bi, 2 Rem (OCCN) *

* Parameter is part of office check number calculation.

Minimum Program Steps

TEMPLATE: module configuration
Track 3/PSO 2 Slot = Track (OCCN) *
Track 4/PSO 3 Slot = Track (OCCN) *

TEMPLATE: track 1-Bi, Island
Track 1 , GCP Frequency = 86 Hz (OCCN) *
Track 1 , Approach Distance = 3916 ft (OCCN) *
Track 1 , Prime Warning Time = 37 sec (OCCN) *
Track 1 , GCP Transmit Level = High (Set in Field,TCN)
Track 1 , Isl Frequency = 8.3 kHz (OCCN) *

TEMPLATE: track 2-Remote Prime
Track 2 , GCP Frequency = 86 Hz (OCCN) *
Track 2 , Approach Distance = 4150 ft (OCCN) *
Track 2 , Prime Warning Time = 37 sec (OCCN) *
Track 2 , Prime Offset Distance = 0 ft (OCCN) *
Track 2 , GCP Transmit Level = High (Set in Field,TCN)

TEMPLATE: track 2 Daxes
Track 2 , Dax A Used = Yes (OCCN) *
Track 2 , Dax A Warning Time = 33 sec (OCCN) *
Track 2 , Dax A Offset Distance = 2120 ft (OCCN) *

TEMPLATE: track 3-Bi, Island
Track 3 , GCP Frequency = 86 Hz (OCCN) *
Track 3 , Approach Distance = 3916 ft (OCCN) *
Track 3 , Prime Warning Time = 37 sec (OCCN) *
Track 3 , GCP Transmit Level = High (Set in Field,TCN)
Track 3 , Isl Frequency = 8.3 kHz (OCCN) *

TEMPLATE: track 4-Remote Prime
Track 4 , GCP Frequency = 86 Hz (OCCN) *
Track 4 , Approach Distance = 4150 ft (OCCN) *
Track 4 , Prime Warning Time = 37 sec (OCCN) *
Track 4 , Prime Offset Distance = 0 ft (OCCN) *
Track 4 , GCP Transmit Level = Medium (Set in Field,TCN)

TEMPLATE: track 4 Daxes
Track 4 , Dax A Used = Yes (OCCN) *
Track 4 , Dax A Warning Time = 33 sec (OCCN) *
Track 4 , Dax A Offset Distance = 2120 ft (OCCN) *

TEMPLATE: SSCC
SSCC-1 Number of GDs = 1 (OCCN) *
SSCC-2 Number of GPs = 1 (OCCN) *
SSCC-2 Number of GDs = 1 (OCCN) *

TEMPLATE: OOS
OOS Control = Display+OOS IPs (OCCN) *
OOS Timeout = 1 hrs (Set in Field)
T2 OOS Control = OOS Input 1 (OCCN) *
T3 OOS Control = OOS Input 1 (OCCN) *
T4 OOS Control = OOS Input 1 (OCCN) *

TEMPLATE: OP assignment 1
OUT 2.1 = T2 Dax A (OCCN) *

TEMPLATE: OP assignment 2
OUT 4.1 = T4 Dax A (OCCN) *

TEMPLATE: IP assignment SSCC
IN 7.2 = Not Used (OCCN) *
IN 8.2 = Out Of Service IP 1 (OCCN) *
IN 8.4 = GD 2.1 (OCCN) *
IN 8.5 = GP 2.1 (OCCN) *

GCP: track 1
Track 1 , Island Distance = 186 ft (Set in Field,TCN)

GCP: track 3
Track 3 , Island Distance = 164 ft (Set in Field,TCN)

ADVANCED: site options
Daylight Savings = On (Set in Field)

SSCC: 1
SSCC-1 Gate Delay = 5 sec (OCCN) *
SSCC 1 , Flash Rate = 55 (OCCN) *

SSCC: 2
SSCC-2 Gate Delay = 5 sec (OCCN) *
SSCC 2 , Flash Rate = 55 (OCCN) *

SEAR
DI 1 = Gnd Flt Tester 1 (OCCN) *
DI 2 = Gnd Flt Tester 2 (OCCN) *
Rly 1 = Ground Fault Test (OCCN) *
Rly 2 = AC Control (OCCN) *

SEAR: slot 7-8 inputs
IN 7.1 = TSS 1 (OCCN) *
IN 8.1 = TSS 2 (OCCN) *
IN 8.3 = POK 2 (OCCN) *

* Parameter is part of office check number calculation.

Check Numbers

Office Check Number: 36A112A8
Config. Check Number: 2738EF86
(Based on MCF Revision 26)

Parameters not part of office check number calculation:

Track 1 , GCP Transmit Level = High (Set in Field)
Track 2 , GCP Transmit Level = High (Set in Field)
Track 3 , GCP Transmit Level = High (Set in Field)
Track 4 , GCP Transmit Level = Medium (Set in Field)
OOS Timeout = 1 hrs (Set in Field)
Track 1 , Island Distance = 186 ft (Set in Field)
Track 3 , Island Distance = 164 ft (Set in Field)
Daylight Savings = On (Set in Field)

Comments

(none)

NEW WORK
CXD1437248 IL2014043
04-25-15 XRL/O.MCIVER/
xorail

6'X6' PTC CROSSING HOUSE

REVISIONS						
			CSX TRANSPORTATION RAIL TRANSPORT GROUP ENGINEERING COMMUNICATIONS AND SIGNALS			
			SIGNALS 293/294/295/296 186TH ST 283191T MINIMUM PROGRAM STEPS REPORT CWE-42 LANSING, IL M.P. DG-29.41			
			DESIGNED XRL	DIGITIZED XRL	CHECKED XRL	DATE 04-25-15
DRAWING	SHEET NO	NEXT SH	NEXT FILE DG02941	NEXT SH G01	FILE DG02941	SHEET P02

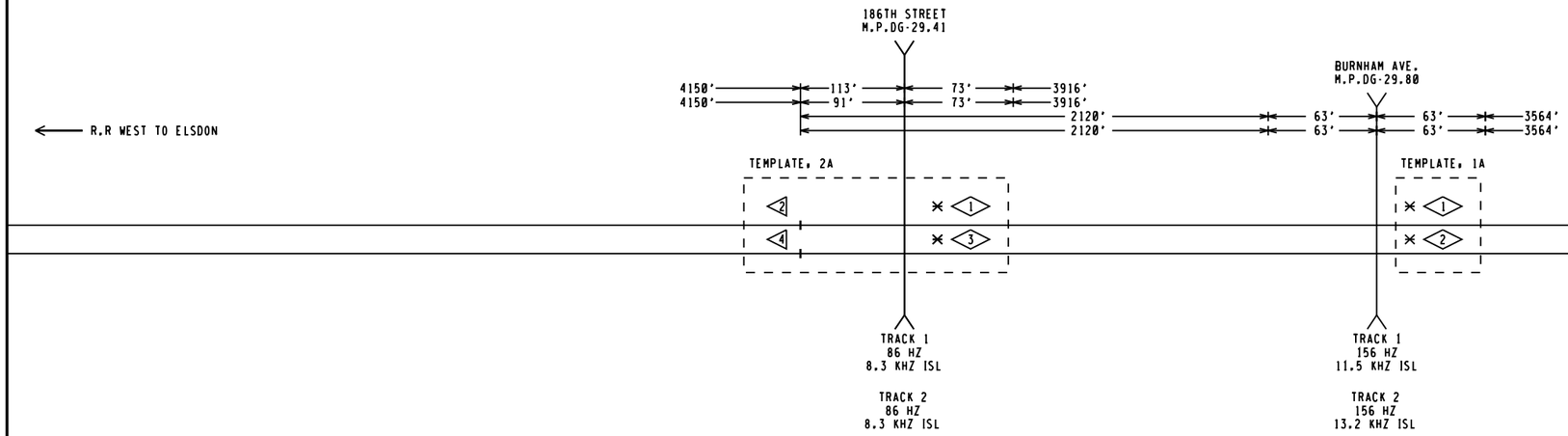

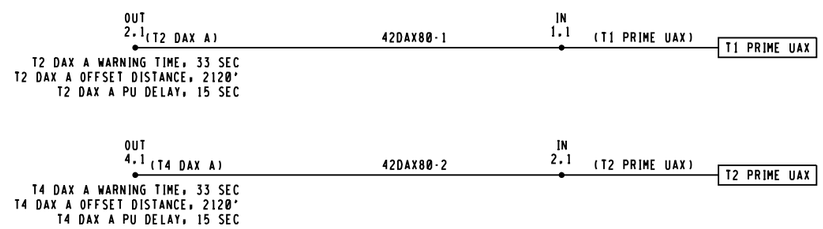

NEW WORK
CXD1437248 IL2014043
04-25-15 XRL/O.MCIVER/
xorail

6'X6' PTC CROSSING HOUSE

SYMBOL	DEFINE
◇	BI-DIRECTIONAL

SYMBOL	DEFINE	SYMBOL	DEFINE	SYMBOL	DEFINE	SYMBOL	DEFINE	SYMBOL	DEFINE	SYMBOL	DEFINE	SYMBOL	DEFINE
◇	SIMULATED BI-DIRECTIONAL	▷	UNI-DIRECTIONAL	⌐¬ | | |_ _|	GCP 4000 UNIT	✕	ISLAND	UAX	SOFTWARE UAX INPUT	V	EXTERNAL VITAL AND GATE	D	INTERNAL SOFTWARE GATE .....

REVISIONS

CSX TRANSPORTATION
RAIL TRANSPORT GROUP ENGINEERING
COMMUNICATIONS AND SIGNALS

SIGNALS 293/294/295/296
186TH ST 283191T
INTERNAL SOFTWARE AND GATES LOGIC DIAGRAMS
LANSING, IL M.P. DG-29.41

DESIGNED	DIGITIZED	CHECKED	DATE
XRL	XRL	XRL	04-25-15

DRAWING	SHEET NO	NEXT SH	NEXT FILE	NEXT SH	FILE	SHEET
	.....	.....	DG02941	E01	DG02941	G01

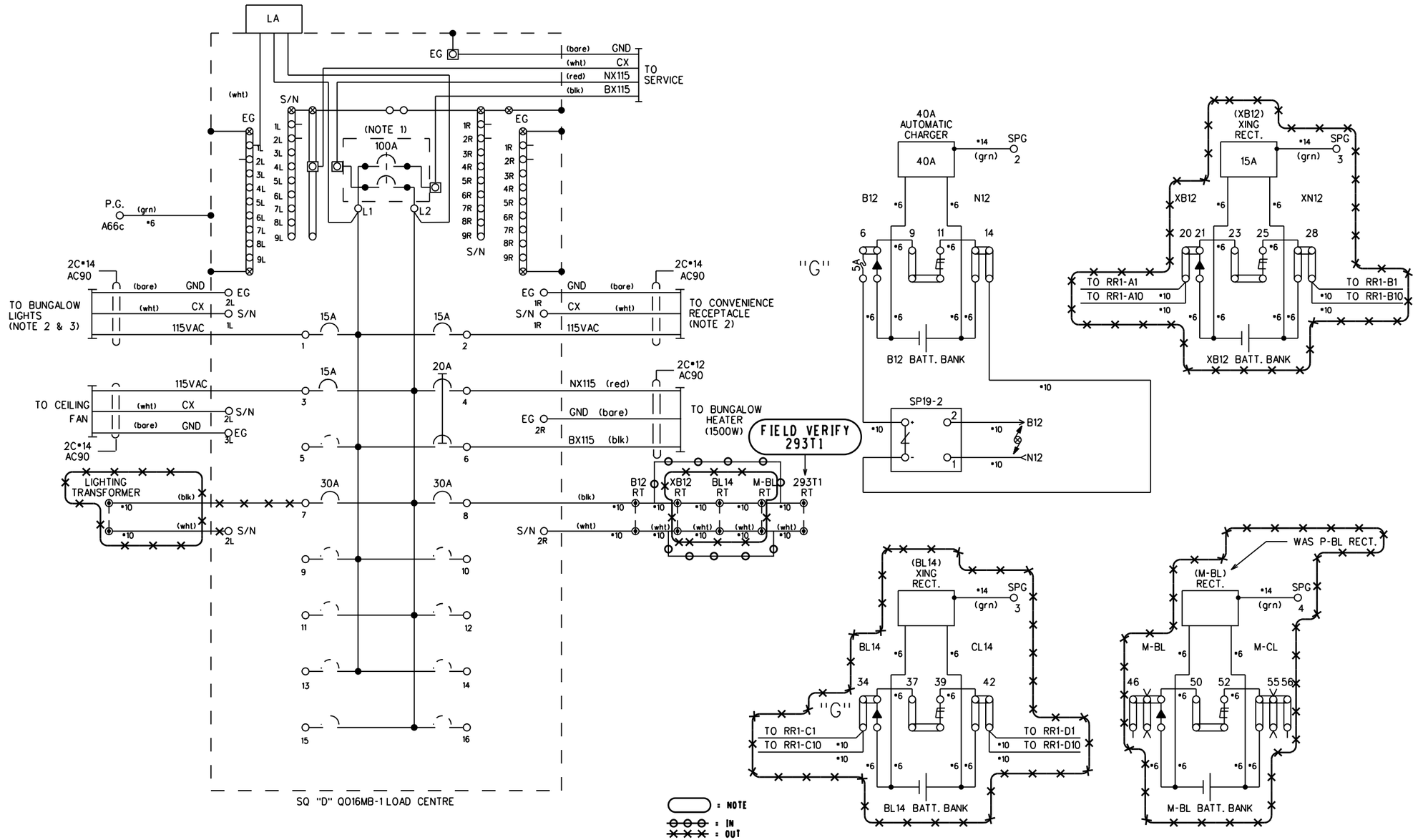

NOTES:

BREAKERS:SP-Q0115 (15A), (20A), (30A)

⊕ - DENOTES INSULATED NUT

1 - CIRCUIT BREAKER AT MAIN SERVICE NOT TO EXCEED 100 AMPERES.

2 - REFER TO POWER STANDARDS BOOK

3 - BUNGALOW LIGHT LAMP WATTAGE NOT TO EXCEED 100

4 - RECTIFIER POWER TRAIN WIRING TO BE THE SIZE INDICATED AC90 WITH GROUND.

REVISIONS	
08-12-96 NST	
09-25-14 XRL	IL2010010, IL2014028

CSX TRANSPORTATION
RAIL TRANSPORT GROUP ENGINEERING
COMMUNICATIONS AND SIGNALS

SIGNALS 293/294/295/296 &

(186TH) X (183RD) ST 283191T

ENERGY DISTRIBUTION CIRCUITS

LANSING, IL M.P. DG-29.41

DESIGNED	DIGITIZED	CHECKED	DATE
XRL	XRL	CSX	09-25-14

DRAWING	SHEET NO	NEXT SH	NEXT FILE	NEXT SH	FILE	SHEET
.....	.....	.....	DG02941	E02	DG02941	E01

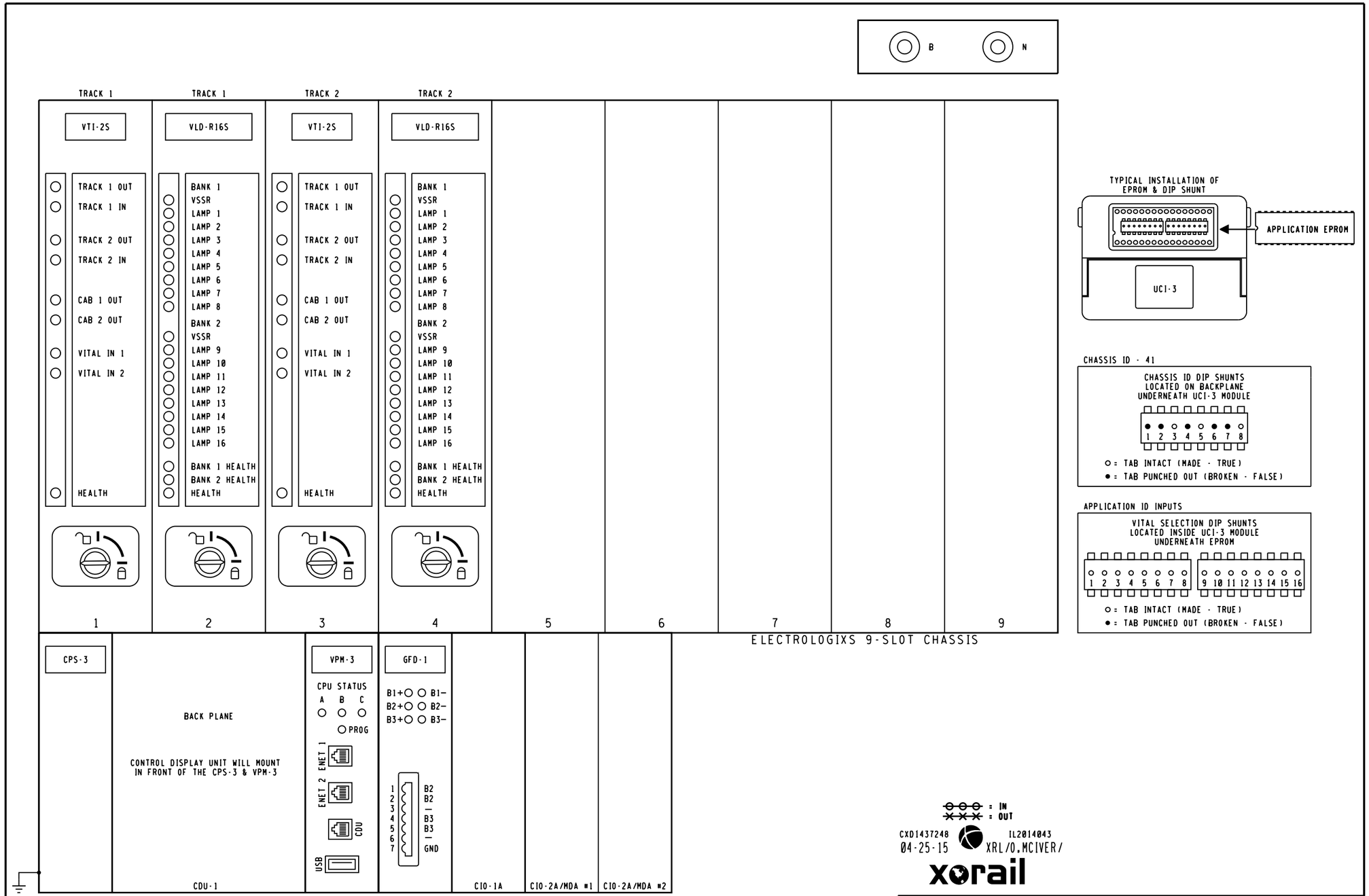

MODULE LEGEND:

- CDU-1 = CONTROL DISPLAY UNIT
- CPS-3 = CENTRAL POWER SUPPLY
- VPM-3 = VITAL PERIPHERAL MASTER
- GFD-1 = GROUND FAULT DETECTOR
- CIO-1A = COMMUNICATION INPUT/OUTPUT
- CIO-2A = COMMUNICATION INPUT/OUTPUT
- CIO-MDA = COMMUNICATION INPUT/OUTPUT
- UCI-3 = CHASSIS INFORMATION
- VTI-2S = VITAL TRACK INTERFACE
- VLD-R16S = VITAL LAMP DRIVER
- VIO-86S = VITAL INPUTS/OUTPUTS

REVISIONS	
09-25-14 XRL	IL2014028

CSX TRANSPORTATION
RAIL TRANSPORT GROUP ENGINEERING
COMMUNICATIONS AND SIGNALS

SIGNALS 293/294/295/296

D186TH X183RD ST 283191T

ELECTROLOGIXS MODULE CONFIGURATION

LANSING, IL M.P. DG-29.41

DESIGNED	DIGITIZED	CHECKED	DATE
XRL	XRL	XRL	05-14-14

DRAWING	SHEET NO	NEXT SH	NEXT FILE	NEXT SH	FILE	SHEET
.....	.....	.....	DG02941	X C01 D E03	DG02941	E02

TOP ROW

ACR			X-B POKR			MCR		
12	B	B77	9	11 F	N68	9 F	11	N41
15	B	C30	10 F	12	C48	10	12	C48
22	B				C49			C49
25	B		OB POKR			B-G POKR		
32	B		9	11 F	N68	9 F	11 F	N68
35	B		10 F	12	C48	10 F	12	C48

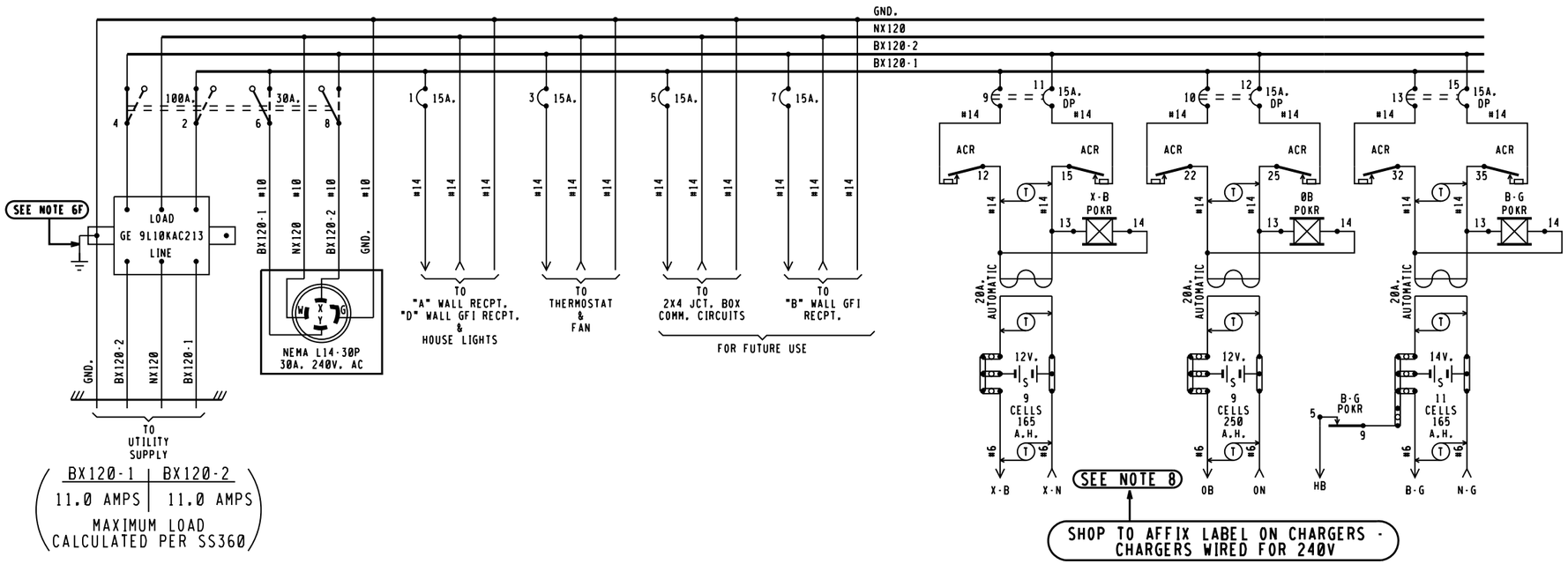

BX120-1	BX120-2
11.0 AMPS	11.0 AMPS

MAXIMUM LOAD CALCULATED PER SS360

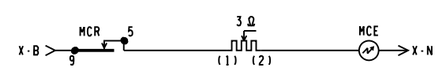

= NOTE

NOTES.

1 - REFERENCES ARE PER SCMS-13.
2 - ARRESTERS ARE PER SS382.
3 - SHELF RELAY PLACEMENT ON CONSIST CHART HAS NO SIGNIFICANCE.
4 - PLUG-IN RELAYS ARE VIEWED FROM THE FRONT OF RACK.
5 - BATTERY A.H. CAPACITY SHOWN IS THE MINIMUM REQUIREMENT.
6 - WIRING
  A - FEED TO ALL BUSSES, LIGHT CIRCUITS,MOTOR CIRCUITS TO BE #10 FLEX.
  B - 120-VOLT FEED FROM ENTRANCE TO POWER BUSS TO BE #10 FLEX.
  C - ALL TRACK WIRES TO BE #10 FLEX.
  D - ALL OTHERS TO BE #16 FLEX UNLESS NOTED.
  E - ALL BATTERY OUTPUTS TO BE #6 PER SS360.
  F - GROUND WIRE NOT NECESSARY WHEN GE ARRESTER IS MOUNTED ON GROUND PLANE OR METAL ENCLOSURE AFFIXED DIRECTLY TO BUNGALOW METALLIC STRUCTURAL MEMBER.
7 - CIRCUIT INTERRUPTERS 2 & 4 ARE MECHANICALLY INTERLOCKED WITH CIRCUIT INTERRUPTERS 6 & 8.
8 - CHARGERS WIRED FOR 240VAC
9 - CIRCUIT BREAKERS PANEL- 00124L125G (24 SPACES)

NEW WORK
CXD1437248 IL2014043
04-25-15 XRL/O.MCIVER/
xorail

6'X6' PTC CROSSING HOUSE

REVISIONS			CSX TRANSPORTATION RAIL TRANSPORT GROUP ENGINEERING COMMUNICATIONS AND SIGNALS			
			SIGNALS 293/294/295/296 & 186TH ST 283191T POWER DISTRIBUTION LANSING, IL M.P. DG-29.41			
			DESIGNED XRL	DIGITIZED XRL	CHECKED XRL	DATE 04-25-15
DRAWING	SHEET NO	NEXT SH	NEXT FILE DG02941	NEXT SH C01	FILE DG02941	SHEET E03

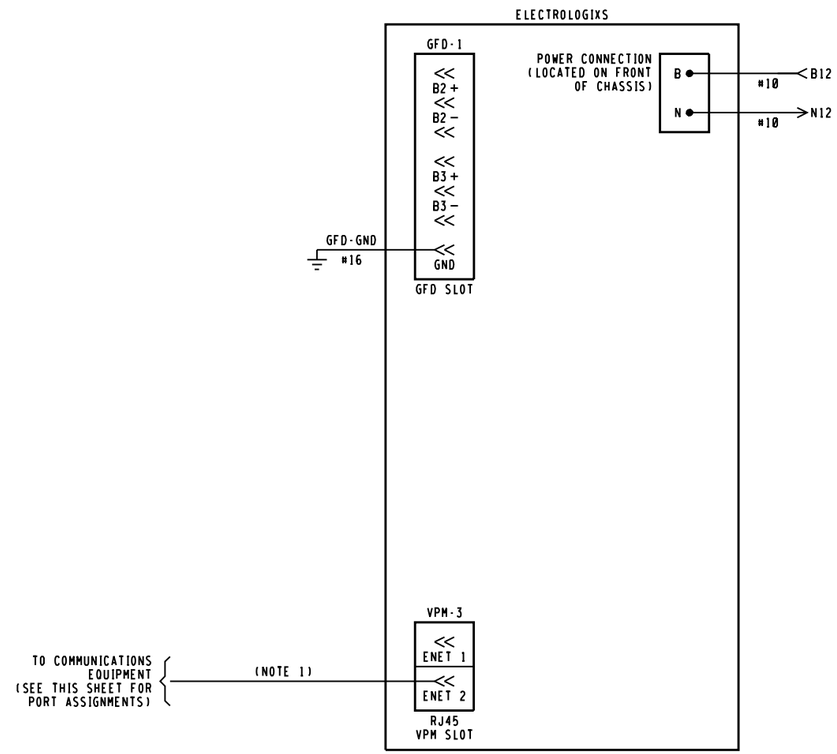

: IN
: OUT

CXD1437248 IL2014043
04-25-15 XRL/O.MCIVER/

xorail

NOTE:

1. CABLE CAT 6 PATCH MOLDED SNAGLESS YELLOW 20 FEET, CSD PN 10-5075-00-20 UNSHIELDED (CSX PN 020-0750021-1)

ETHERNET SWITCH PORT ASSIGNMENTS

PORT #1	COMM. ROUTER
PORT #2	COMM. EQUIPMENT
PORT #3	220 MHZ RADIO / SATELLITE
PORT #4	COMMUNICATIONS NETWORK ADAPTER
PORT #5	WAYSIDE INTERFACE UNIT #3 / COMM. ETHERNET EXTENDER
PORT #6	WAYSIDE INTERFACE UNIT #2 / SIGNAL ETHERNET EXTENDER
PORT #7	WAYSIDE INTERFACE UNIT #1 / VPM
PORT #8	WAYSIDE MESSAGE SERVER

REVISIONS

09-25-14 XRL	IL2014028

CSX TRANSPORTATION
RAIL TRANSPORT GROUP ENGINEERING
COMMUNICATIONS AND SIGNALS

SIGNALS 293/294/295/296

D186TRD X183RD ST 283191T

ELECTROLOGIXS CIRCUITS

LANSING, IL M.P. DG-29.41

DESIGNED	DIGITIZED	CHECKED	DATE
XRL	XRL	XRL	05-14-14

DRAWING	SHEET NO	NEXT SH	NEXT FILE	NEXT SH	FILE	SHEET
.....	.....	.....	DG02941	C02	DG02941	C01

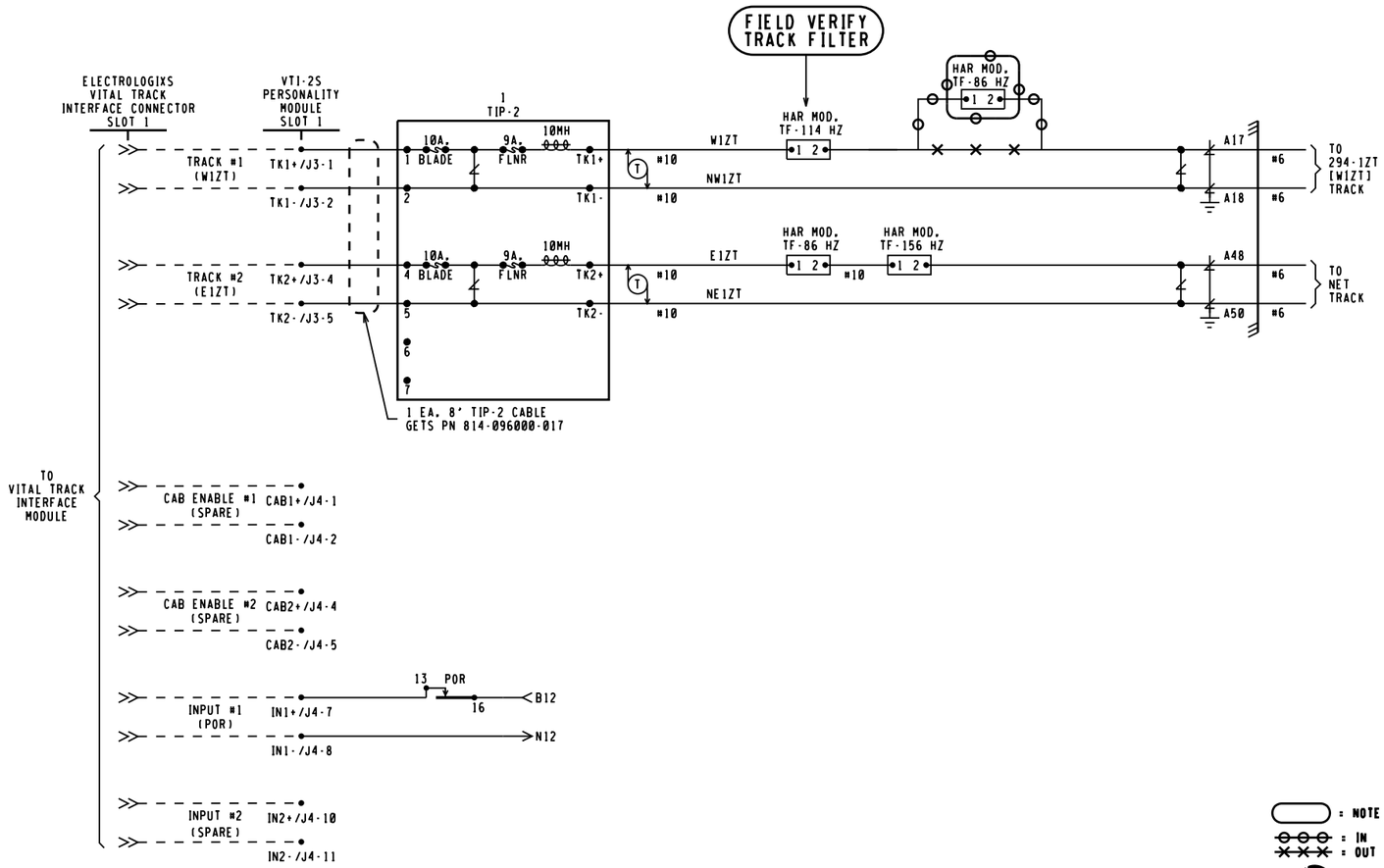

= NOTE
= IN
= OUT

CXD1437248
04-25-15
IL2014043
XRL/O.MCIVER/

xorail

VTI-2S PERSONALITY MODULE SLOT 1 PLUG CONNECTORS

J3			J4		
TK1+	■	1	CAB1+	□	1
TK1-	■	2	CAB1-	□	2
—	□	3	—	□	3
TK2+	■	4	CAB2+	□	4
TK2-	■	5	CAB2-	□	5
—	□	6	—	□	6
—	□	7	IN1+	■	7
			IN1-	■	8
			—	□	9
			IN2+	□	10
			IN2-	□	11

■ = WIRE PRESENT

NOTES:

1. ···· = INTERNAL CONNECTION
2. [ ] = TAGGING PURPOSE ONLY
3. POK INPUT PROGRAMMED TO ACTIVATE CODE 10 ON BOTH TRACKS.

TRACK 1

REVISIONS	
09-25-14 XRL	IL2014028
03-12-15 XRL	IL2014005

CSX TRANSPORTATION
RAIL TRANSPORT GROUP ENGINEERING
COMMUNICATIONS AND SIGNALS

SIGNALS 293/294/295/296 &

186TH X 183RD ST 283191T
ELECTROLOGIXS TRACK CIRCUITS
LANSING, IL M.P. DG-29.41

DESIGNED	DIGITIZED	CHECKED	DATE
XRL	XRL	XRL	05-14-14

DRAWING	SHEET NO	NEXT SH	NEXT FILE	NEXT SH	FILE	SHEET
.....	.....	.....	DG02941	C03	DG02941	C02

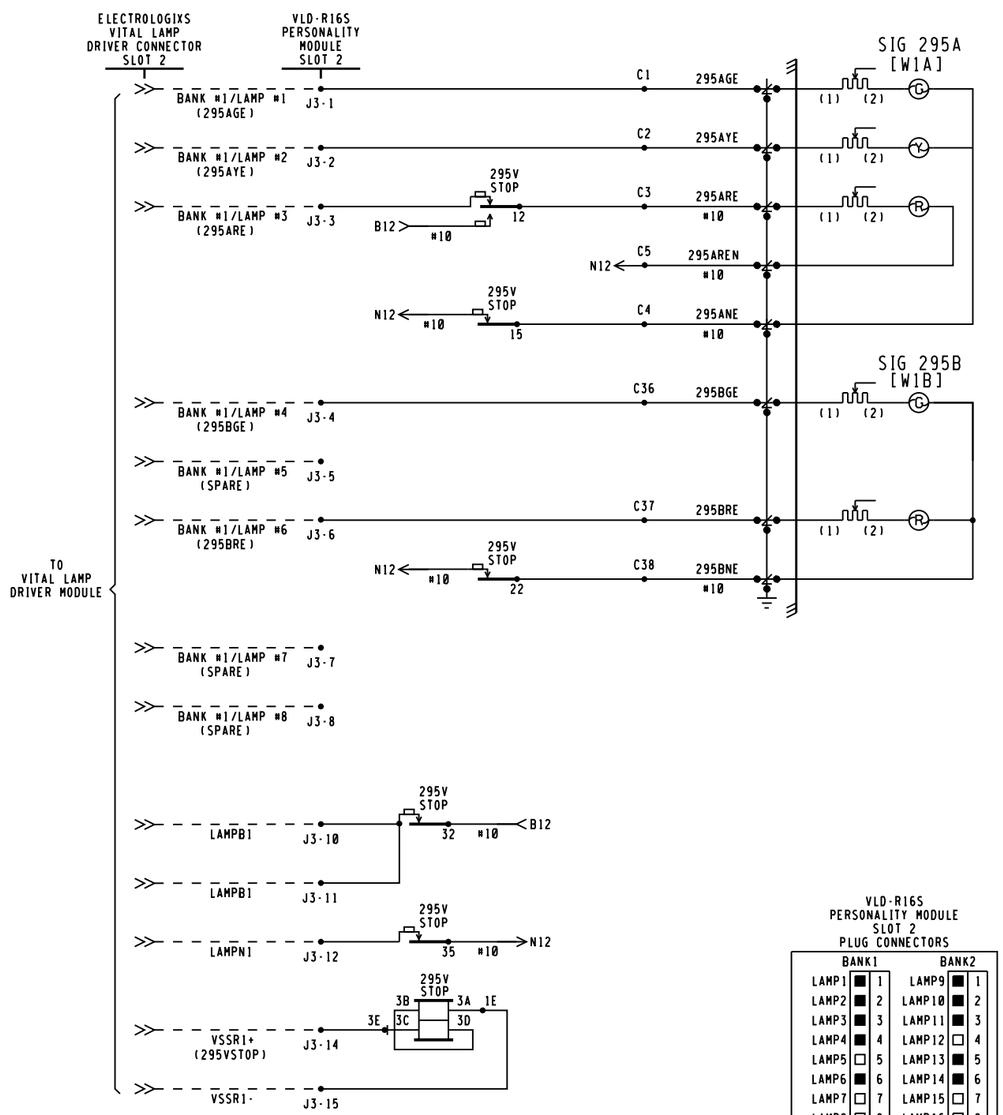

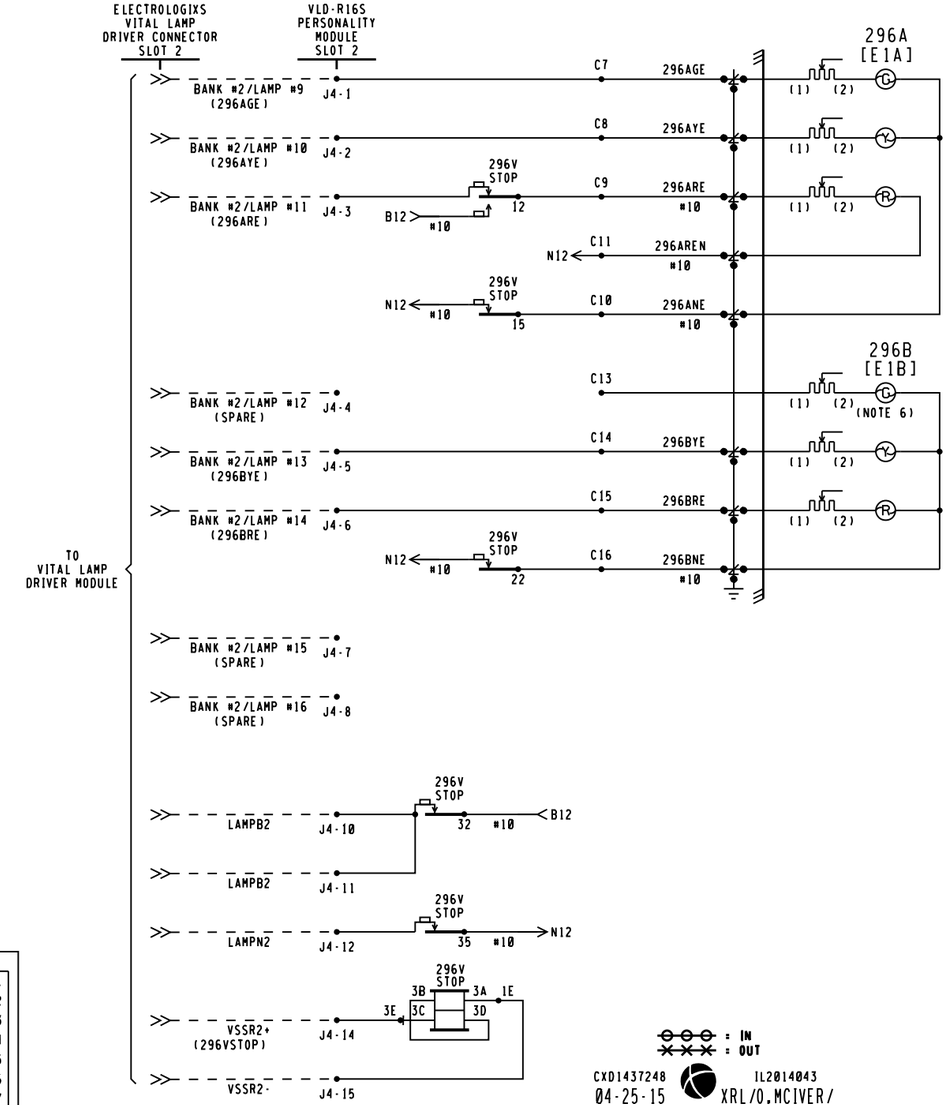

VLD-R16S PERSONALITY MODULE SLOT 2 PLUG CONNECTORS

BANK1			BANK2		
LAMP1	■	1	LAMP9	■	1
LAMP2	■	2	LAMP10	■	2
LAMP3	■	3	LAMP11	■	3
LAMP4	■	4	LAMP12	□	4
LAMP5	□	5	LAMP13	■	5
LAMP6	■	6	LAMP14	■	6
LAMP7	□	7	LAMP15	□	7
LAMP8	□	8	LAMP16	□	8
—	□	9	—	□	9
LAMPB1	■	10	LAMPB2	■	10
LAMPB1	■	11	LAMPB2	■	11
LAMPN1	■	12	LAMPN2	■	12
—	□	13	—	□	13
VSSR1+	■	14	VSSR2+	■	14
VSSR1-	■	15	VSSR2-	■	15
J3			J4		

■ = WIRE PRESENT

NOTES.

1. = LPC-10512-1 (15A, BLUE LEAD) HYBRID LOW VOLTAGE ARRESTER, UNLESS NOTED.
2. ···· = INTERNAL CONNECTION
3. ALL HOUSE WIRING THIS SHEET #14 FLEX UNLESS NOTED.
4. ALL RESISTORS ARE 3 OHM, 15 WATTS.
5. [ ] = TAGGING PURPOSE ONLY
6. SIGNAL 296 "B" HEAD GREEN ASPECT HAS BULB REMOVED AND BLANKING PLATE INSTALLED.

: IN
: OUT

CXD1437248 IL2014043
04-25-15 XRL/O.MCIVER/

xorail

TRACK 1

REVISIONS	
09-25-14 XRL	IL2014028

CSX TRANSPORTATION
RAIL TRANSPORT GROUP ENGINEERING
COMMUNICATIONS AND SIGNALS

SIGNALS 293/294/295/296 &

D186TRD X183RD ST 283191T

SIGNAL LIGHTING CIRCUITS

LANSING, IL M.P. DG-29.41

DESIGNED	DIGITIZED	CHECKED	DATE
XRL	XRL	XRL	05-14-14

DRAWING	SHEET NO	NEXT SH	NEXT FILE	NEXT SH	FILE	SHEET
.....	.....	.....	DG02941	C04	DG02941	C03

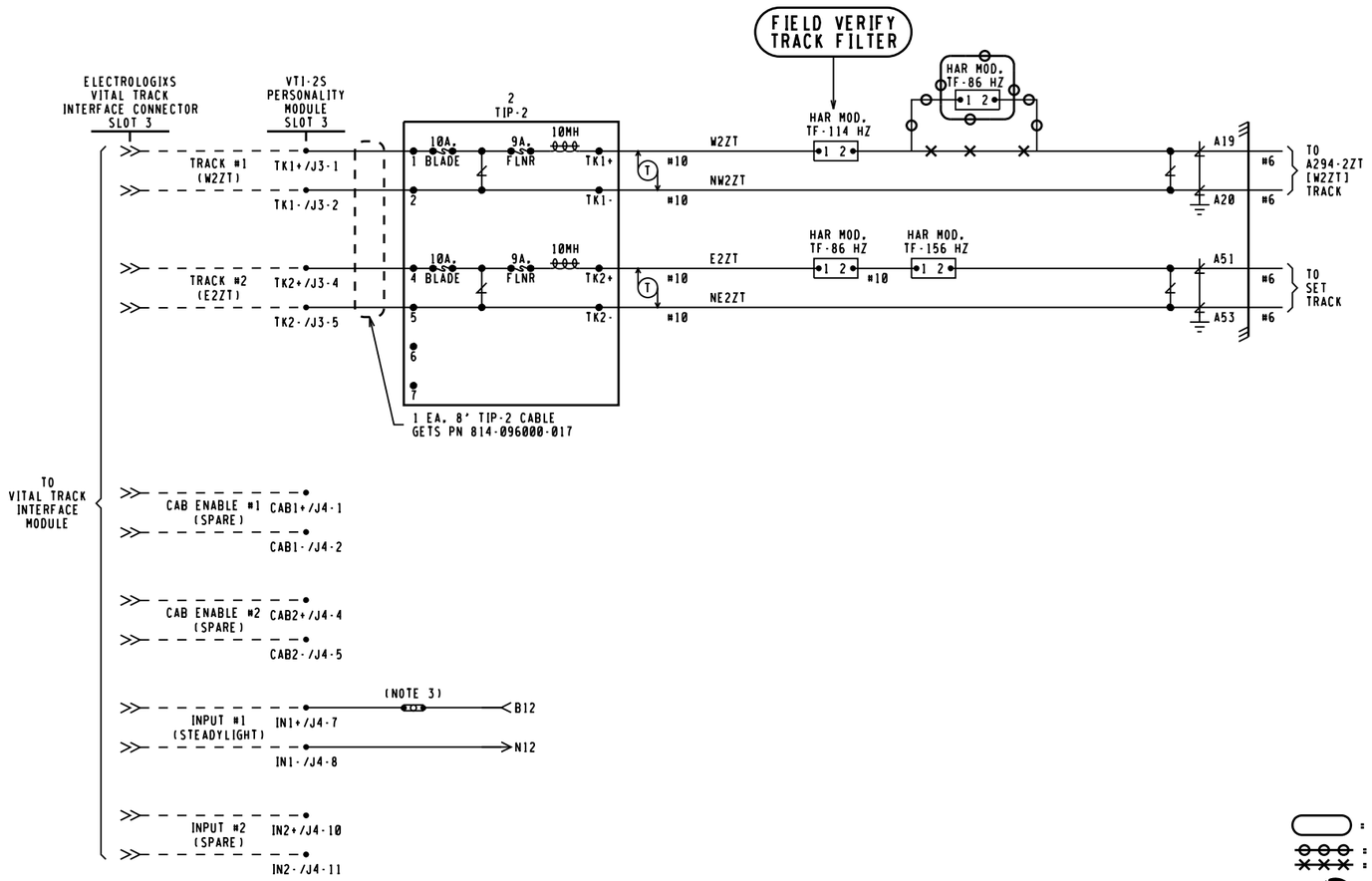

= NOTE
= IN
= OUT

CXD1437248 04-25-15 IL2014043 XRL/O.MCIVER/

xorail

VTI-2S PERSONALITY MODULE SLOT 3 PLUG CONNECTORS

J3			J4		
TK1+	■	1	CAB1+	□	1
TK1-	■	2	CAB1-	□	2
—	□	3	—	□	3
TK2+	■	4	CAB2+	□	4
TK2-	■	5	CAB2-	□	5
—	□	6	—	□	6
—	□	7	IN1+	■	7
			IN1-	■	8
			—	□	9
			IN2+	□	10
			IN2-	□	11

■ = WIRE PRESENT

NOTES:

1. ···· = INTERNAL CONNECTION
2. [ ] = TAGGING PURPOSE ONLY
3. CLOSE TEST NUT FOR STEADY LIGHTING WITH POWER OFF INPUT HIGH, OPEN TEST NUT FOR APPROACH LIGHTING.

TRACK 2

REVISIONS	
09-25-14 XRL	IL2014028
03-12-15 XRL	IL2014005

CSX TRANSPORTATION
RAIL TRANSPORT GROUP ENGINEERING
COMMUNICATIONS AND SIGNALS

SIGNALS 293/294/295/296

186TH X 183RD ST 283191T
ELECTROLOGIXS TRACK CIRCUITS
LANSING, IL M.P. DG-29.41

DESIGNED	DIGITIZED	CHECKED	DATE
XRL	XRL	XRL	05-14-14

DRAWING	SHEET NO	NEXT SH	NEXT FILE	NEXT SH	FILE	SHEET
.....	.....	.....	DG02941	C05	DG02941	C04

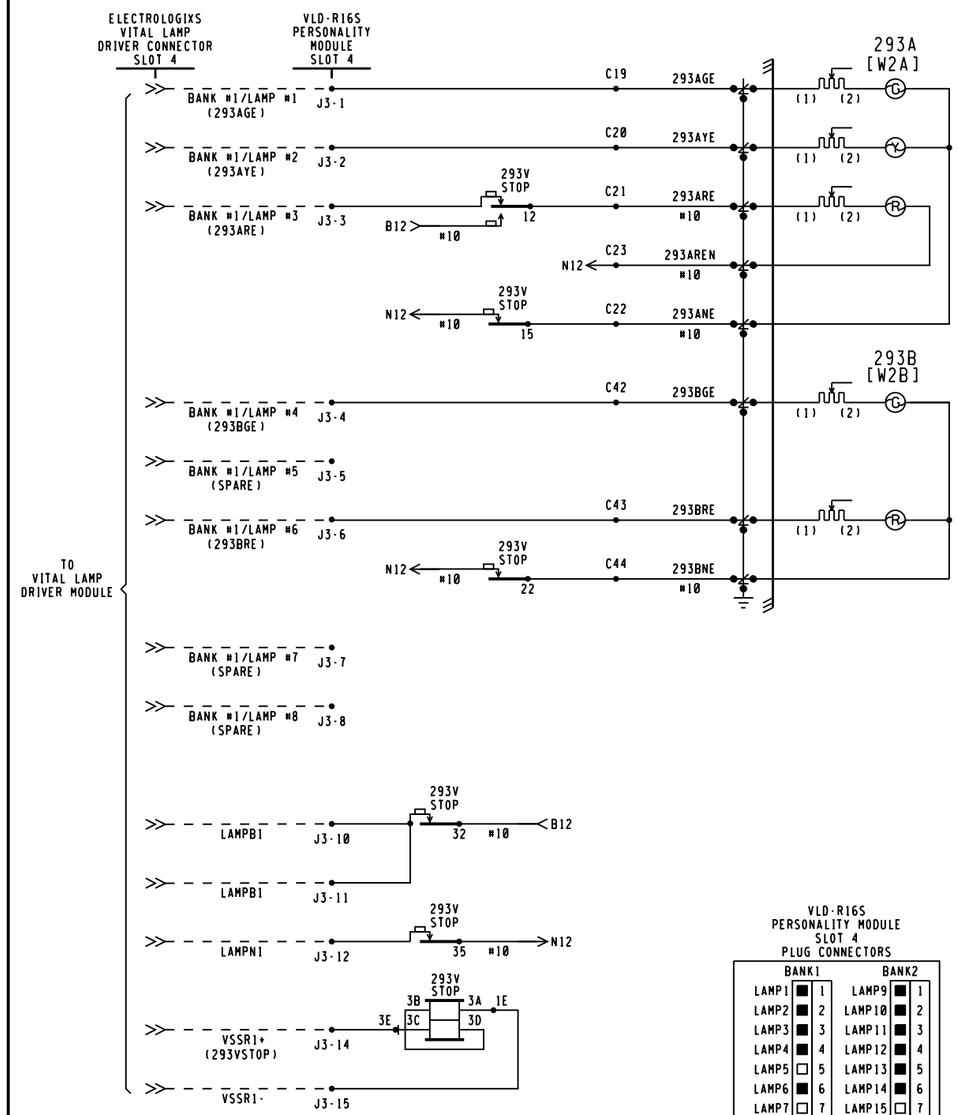

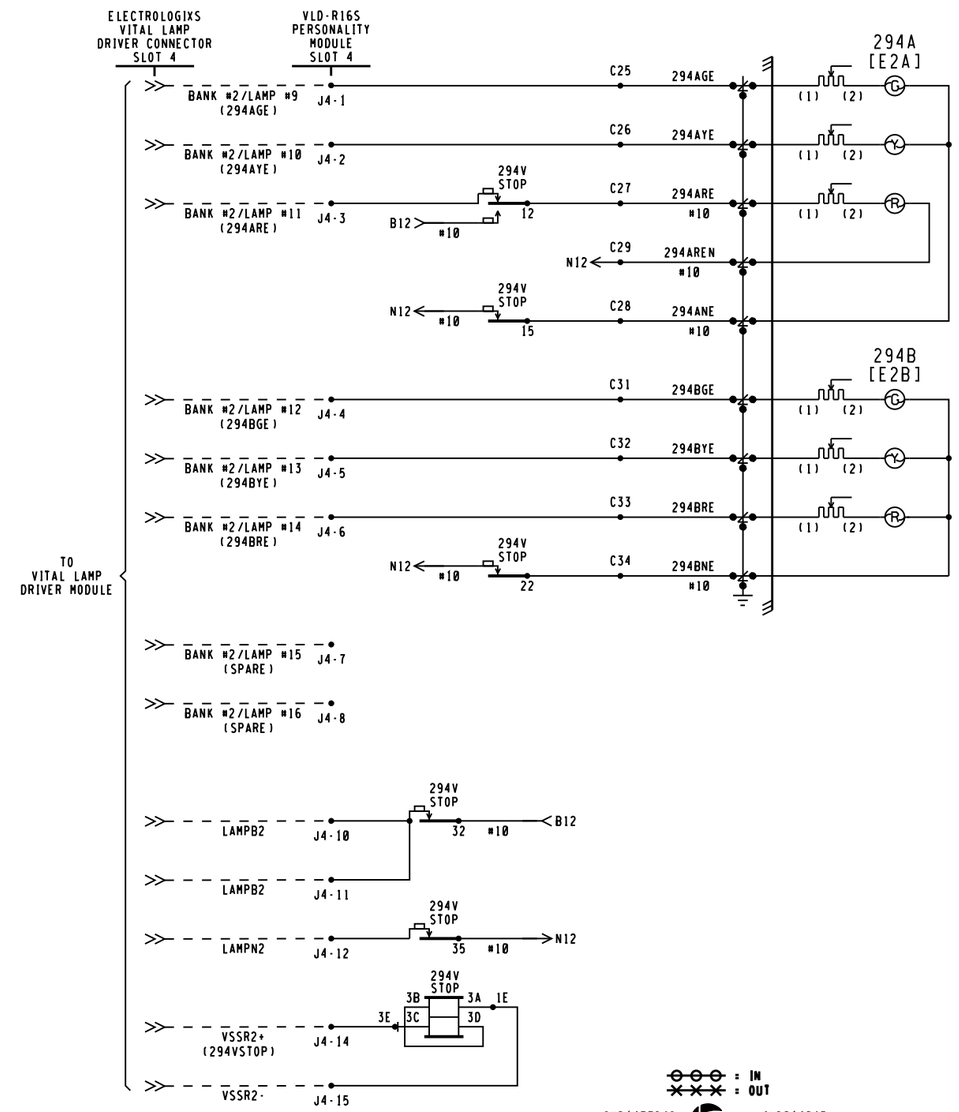

VLD-R16S PERSONALITY MODULE SLOT 4 PLUG CONNECTORS

BANK1			BANK2		
LAMP1	■	1	LAMP9	■	1
LAMP2	■	2	LAMP10	■	2
LAMP3	■	3	LAMP11	■	3
LAMP4	■	4	LAMP12	■	4
LAMP5	□	5	LAMP13	■	5
LAMP6	■	6	LAMP14	■	6
LAMP7	□	7	LAMP15	□	7
LAMP8	□	8	LAMP16	□	8
—	□	9	—	□	9
LAMPB1	■	10	LAMPB2	■	10
LAMPB1	■	11	LAMPB2	■	11
LAMPN1	■	12	LAMPN2	■	12
—	□	13	—	□	13
VSSR1+	■	14	VSSR2+	■	14
VSSR1-	■	15	VSSR2-	■	15
J3			J4		

■ = WIRE PRESENT

: IN
: OUT

CXD1437248 04-25-15 IL2014043 XRL/O.MCIVER/

xorail

TRACK 2

NOTES:

1. ●/● = LPC-10512-1 (15A, BLUE LEAD) HYBRID LOW VOLTAGE ARRESTER, UNLESS NOTED.
2. ---- = INTERNAL CONNECTION
3. ALL HOUSE WIRING THIS SHEET #14 FLEX UNLESS NOTED.
4. ALL RESISTORS ARE 3 OHM, 15 WATTS.
5. [ ] = TAGGING PURPOSE ONLY

REVISIONS	
09-25-14 XRL	IL2014028

CSX TRANSPORTATION
RAIL TRANSPORT GROUP ENGINEERING
COMMUNICATIONS AND SIGNALS

SIGNALS 293/294/295/296

Q186TH X183RD ST 283191T

SIGNAL LIGHTING CIRCUITS

LANSING, IL M.P. DG-29.41

DESIGNED	DIGITIZED	CHECKED	DATE
XRL	XRL	XRL	05-14-14

DRAWING	SHEET NO	NEXT SH	NEXT FILE	NEXT SH	FILE	SHEET
.....	.....	.....	DG02941	C06	DG02941	C05

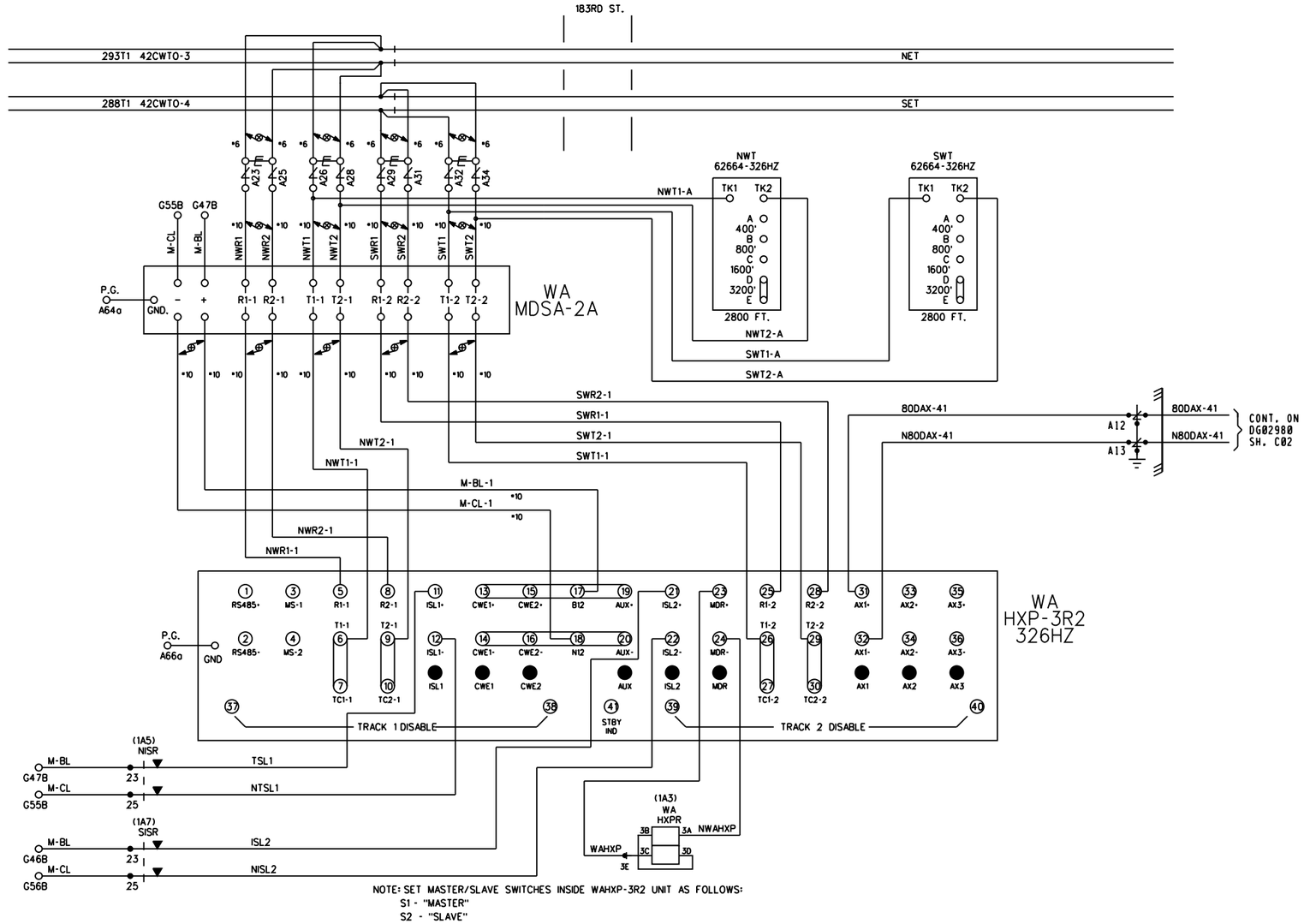

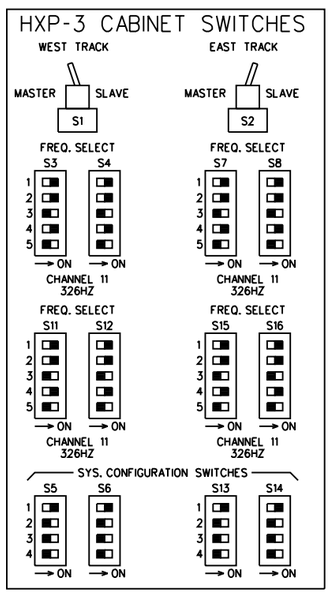

HXP-3 SETUP SHEET			
LOCATION			
OPTION 90 (CABINET #)			
	TRACK 1	TRACK 2	DEFAULT
APPROACH LENGTH	2640 FT.	2640 FT.	9999 FT.
WARNING TIME	35	35	99 SEC.
LUMPED IMPEDANCE (LIA)	0	0	0
TRANSMITTER CHECK (TC)	0	0	0
MOTION DETECTOR RESTART	0	0	99%
OPTION 1 TRACK ENABLE (TKENA)	UP	UP	dn (down)
OPTION 2 TRACK FREQUENCY (TKFO)	326 HZ	326 HZ	0 HZ
OPTION 3 CONSTANT WARNING/MOTION (CW/MO)	C	C	d (Motion)
OPTION 4 UNI/BIDIRECTIONAL (UNI/BI)	B	B	b (b_1)
OPTION 5 NARROW BAND COMPENSATION (NBS-C)	N/A	N/A	00 %
OPTION 6 CWE WARNING TIME (CWEWT)	80	80	80 SEC.
OPTION 7 LOSS OF SHUNT TIME (LOS)	16	16	16 SEC.
OPTION 8 LOS W/JOINTS NEAR ISLAND (I-LOS)	5	5	5 SEC.
OPTION 9 BALLAST COMPENSATION (BC)	142	142	160
AX OPTIONS			
	OPTION 11 AX DRIVE #1	OPTION 12 AX DRIVE #2	OPTION 13 AX DRIVE #3	DEFAULT
TRACK ASSIGNMENT (TKASN)	1 & 2	N/A	N/A	1 & 2
OFFSET DISTANCE TRACK 1 (OF-TK1)	2157 FT.	N/A	N/A	0 FT.
OFFSET DISTANCE TRACK 2 (OF-TK2)	2157 FT.	N/A	N/A	0 FT.
WARNING TIME (WT)	33	N/A	N/A	99 SEC.
MOTION DETECTOR RESTART (MDRST)	0	N/A	N/A	99%
CONSTANT WARNING/MOTION (CW-MO)	C	N/A	N/A	d (Motion)
CLEAR JOINTS LOS (CJ-LOS)	3 SEC.	N/A	N/A	0
POST JOINT DETECTION (PJ-DET)	15	N/A	N/A	15 SEC.

ALL OUT
THIS SHEET IS VOID
WHEN AS IN SERVICED.

CXD1437248 IL2014043
04-25-15 XRL/O.MCIVER/

xorail

REVISIONS	
08-12-96 NST	
09-25-14 XRL	IL2010010, IL2014028
03-12-15 XRL	IL2014005, IL2014006

CSX TRANSPORTATION
RAIL TRANSPORT GROUP ENGINEERING
COMMUNICATIONS AND SIGNALS

SIGNALS 293/294/295/296

183RD ST 283191T
WEST HXP CIRCUITS
LANSING, IL M.P. DG-29.42

DESIGNED	DIGITIZED	CHECKED	DATE
XRL	XRL	CSX	09-25-14

DRAWING	SHEET NO	NEXT SH	NEXT FILE	NEXT SH	FILE	SHEET
.....	.....	.....	DG02941	C07	DG02941	C06

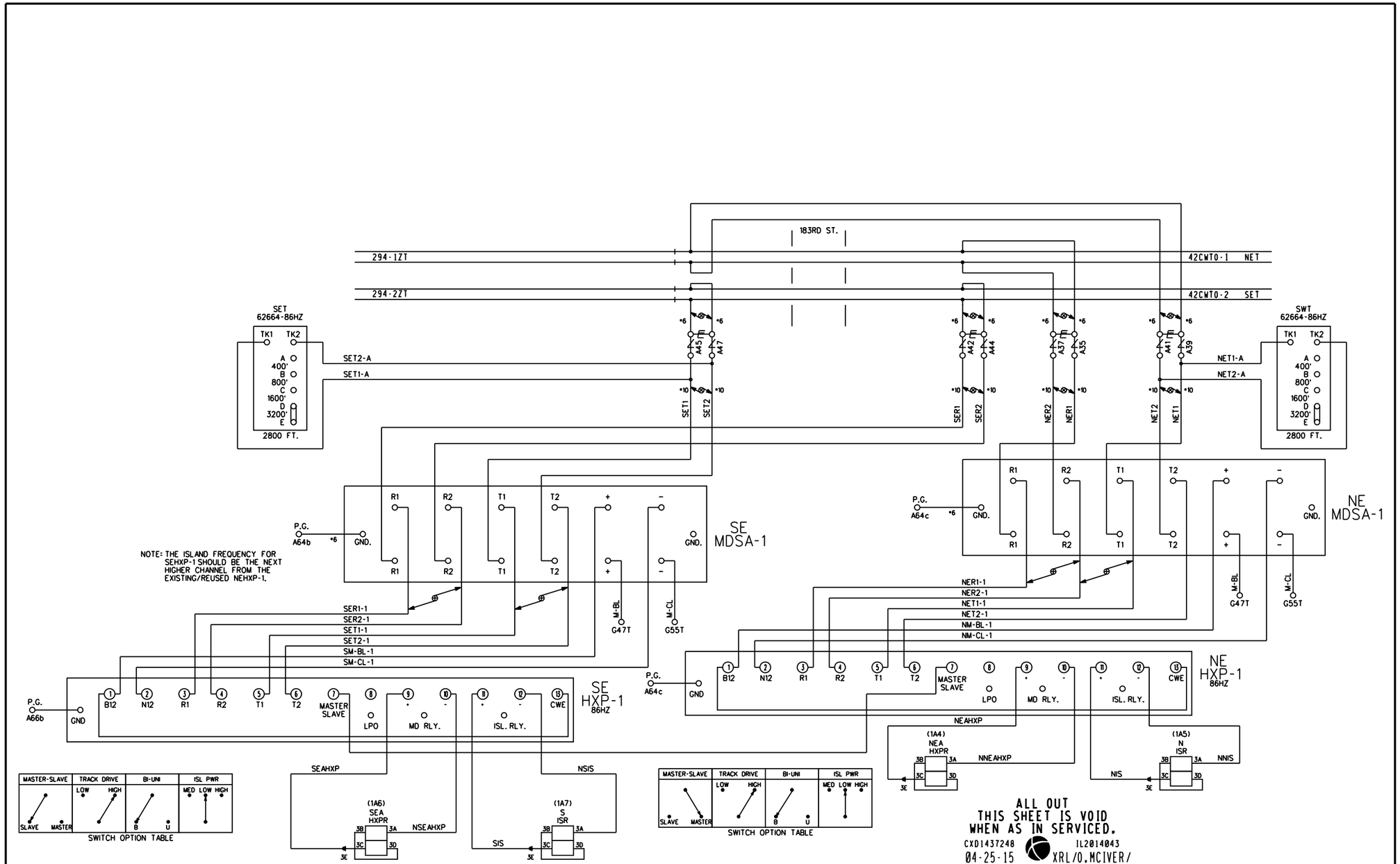

ALL OUT
THIS SHEET IS VOID
WHEN AS IN SERVICED.

CXD1437248 IL2014043
04-25-15 XRL/O.MCIVER/

xorail

REVISIONS	
08-12-96 NST	
09-25-14 XRL	IL2010010, IL2014028

CSX TRANSPORTATION
RAIL TRANSPORT GROUP ENGINEERING
COMMUNICATIONS AND SIGNALS

SIGNALS 293/294/295/296
183RD ST 283191T
EAST HXP CIRCUITS
LANSING, IL M.P. DG-29.42

DESIGNED	DIGITIZED	CHECKED	DATE
XRL	XRL	CSX	09-25-14

DRAWING	SHEET NO	NEXT SH	NEXT FILE	NEXT SH	FILE	SHEET
.....	.....	.....	DG02941	C08	DG02941	C07

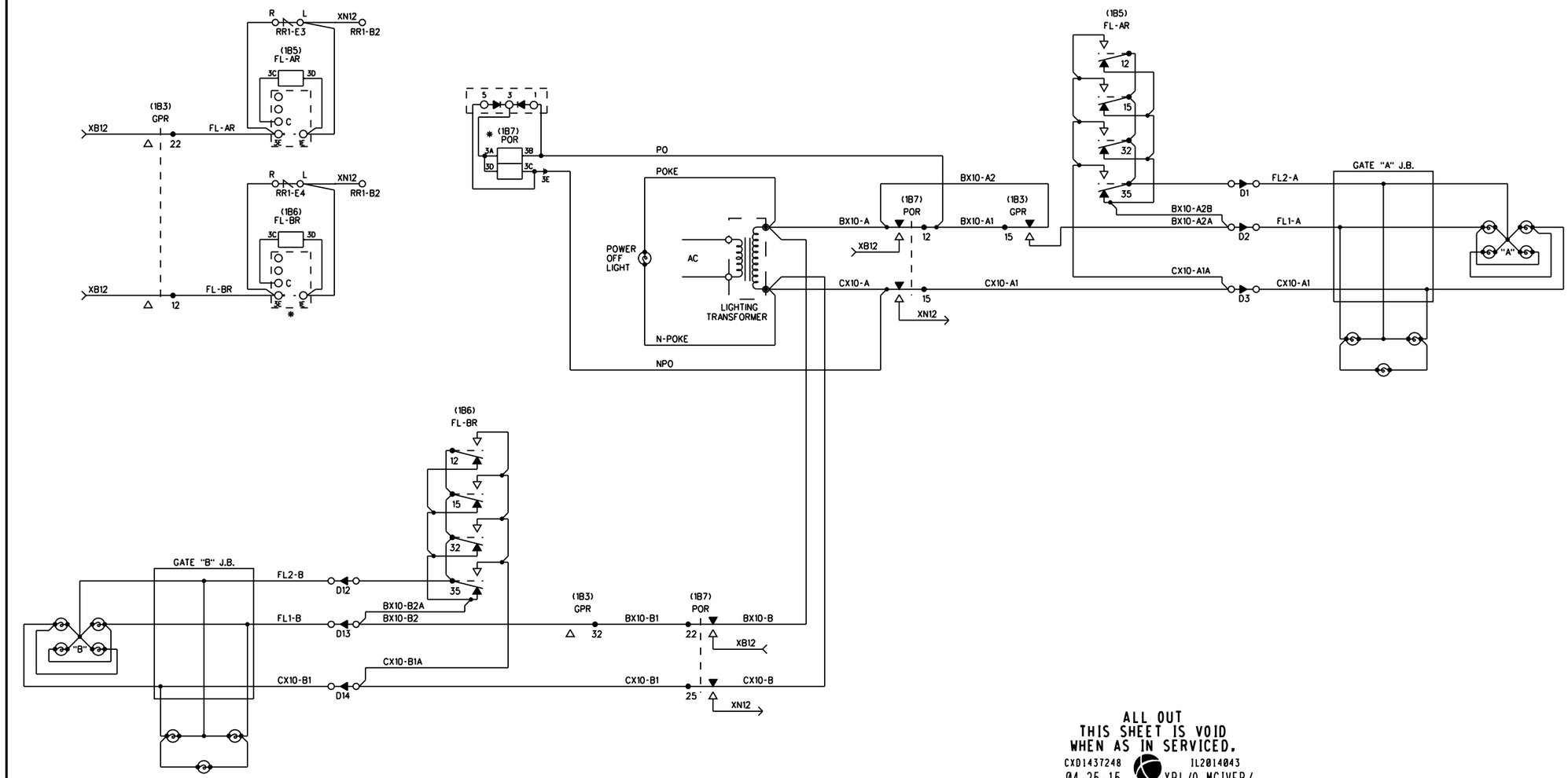

ALL OUT
THIS SHEET IS VOID
WHEN AS IN SERVICED.

CXD1437248 IL2014043
04-25-15 XRL/O.MCIVER/

xorail

REVISIONS	
08-12-96 NST	
09-25-14 XRL	IL2010010, IL2014028

CSX TRANSPORTATION
RAIL TRANSPORT GROUP ENGINEERING
COMMUNICATIONS AND SIGNALS

SIGNALS 293/294/295/296 &

183RD ST 283191T
FLASHING LIGHT CIRCUITS
LANSING, IL M.P. DG-29.42

DESIGNED	DIGITIZED	CHECKED	DATE
XRL	XRL	CSX	09-25-14

DRAWING	SHEET NO	NEXT SH	NEXT FILE	NEXT SH	FILE	SHEET
.....	.....	.....	DG02941	C09	DG02941	C08