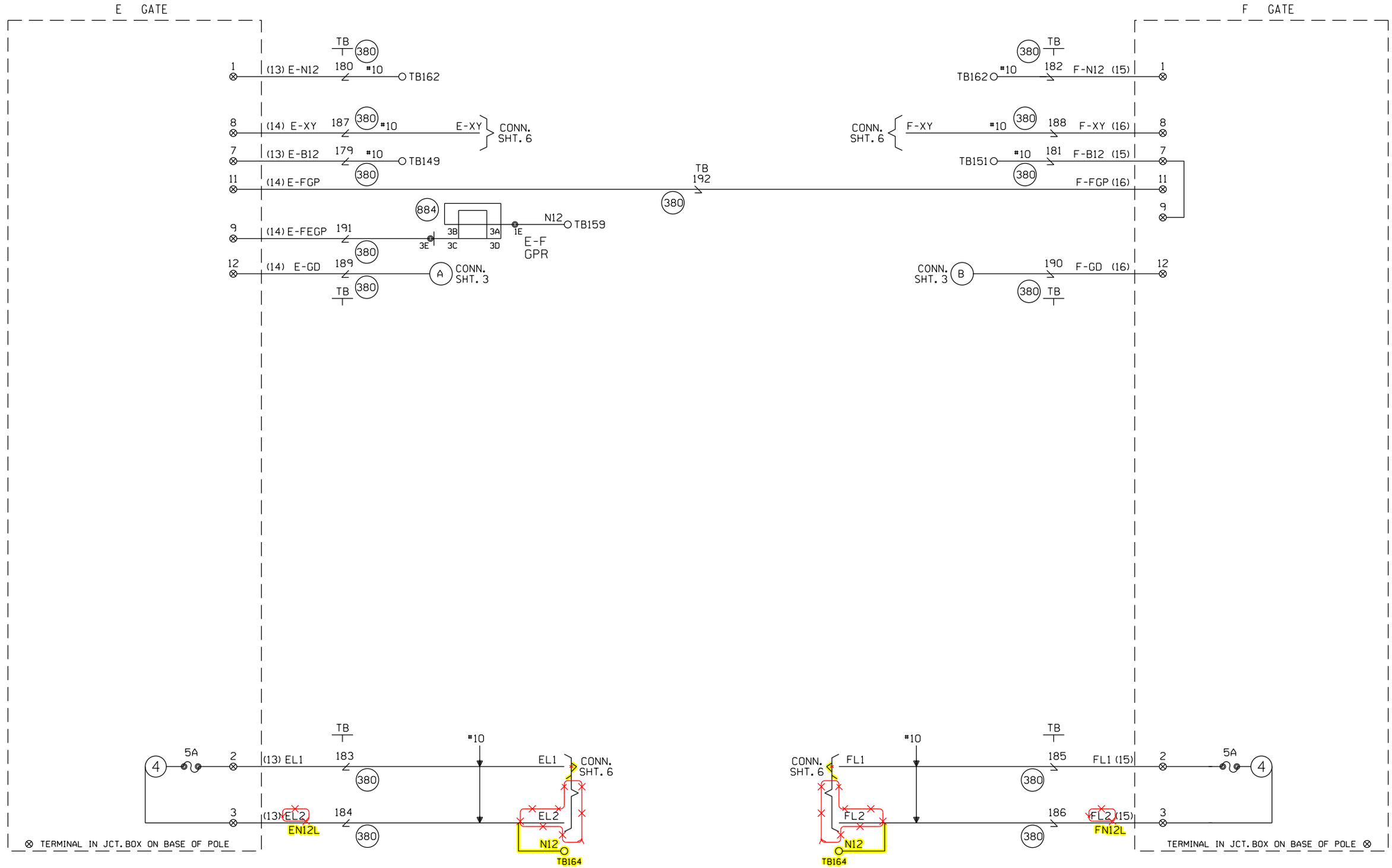

CABLE TABULATION

CABLE NO. 13 5C. NO.6 U.G.B.T. TO GATE E
CABLE NO. 14 7C. NO.14 U.G.B.T. TO GATE E
CABLE NO. 15 5C. NO.6 U.G.B.T. TO GATE F
CABLE NO. 16 7C. NO.14 U.G.B.T. TO GATE F

= IN
= OUT

~~NEW SHEET~~

Designed: 2/25/15 TIER 3 PHASE 3 M.P.177.00 TO M.P.160.00 HSR SCOPE CHANGE Rec#: WO#: 22820 IS: MWK / / NST/JVJ	Designed: 08/21/12 TIER 3 PHASE 3 M.P.177.00 TO M.P.160.00 UPGRADE XINGS AND CP'S FOR HIGH SPEED RAIL Rec#: WO#: 22820 IS: MWK / / NST/MJF	MODIFICATION LEVEL	
		Q.A. LAST LEVEL CHECKED	DU
		LAST LEVEL MOD THIS TYPICAL	DU
		LAST LEVEL BY DESIGNER	DU
		CHANGED FROM TYPICAL?	Y
		REV 01.24.11 4K GFCTYP.5	

CIRCUIT MODIFICATIONS ARE NOT TO BE MADE WITHOUT AUTHORITY FROM THE OFFICE OF SIGNAL DESIGN

Date: 08/21/12
Des: NST
Chk: MWK
AFE: 22820

UNION PACIFIC RAILROAD

ELKHART, ILLINOIS
OGLESBY STREET
SPRINGFIELD SUBDIVISION

Office of AVP Engineering - Signal — Omaha, Nebraska

Sh.: 8
DOT 294267C
MP: 167.26
ID: CSL16726.8X

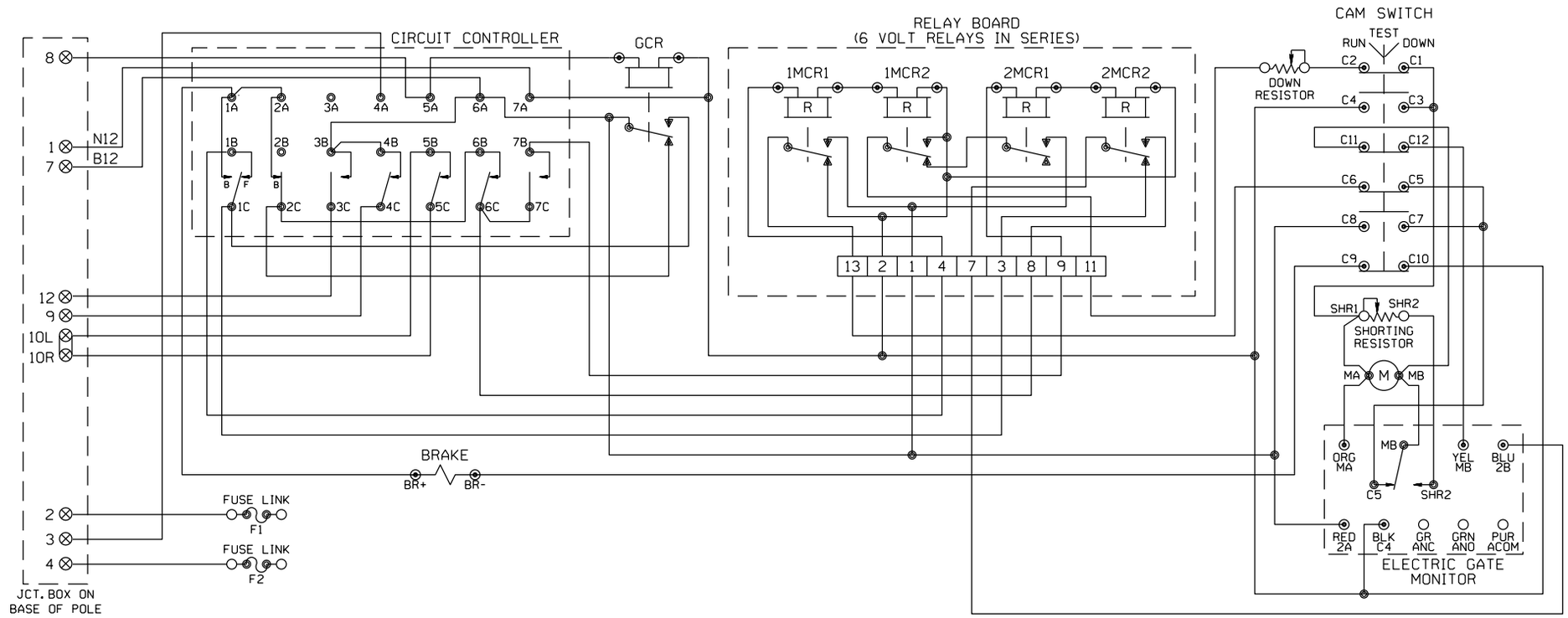

FOR WIRING GATES "C" AND "D"

WCH 3597 EXIT GATE

CONTACT	CLOSED	FUNCTION
1F	90-2	POWER DOWN
1B	2-0	ENGAGE BRAKE DOWN
2B	86-90	ENGAGE BRAKE UP
3	0-10	GATE DOWN
4	82-90	GATE CLEAR
5	10-90	BELL
6	60-90	POWER UP
7	0-75	DROP POWER UP

MECHANISM SHOWN IN CLEAR POSITION

REDRAWN AND REUSED
FROM VOIDED M.P. 167.30 SHEET 9

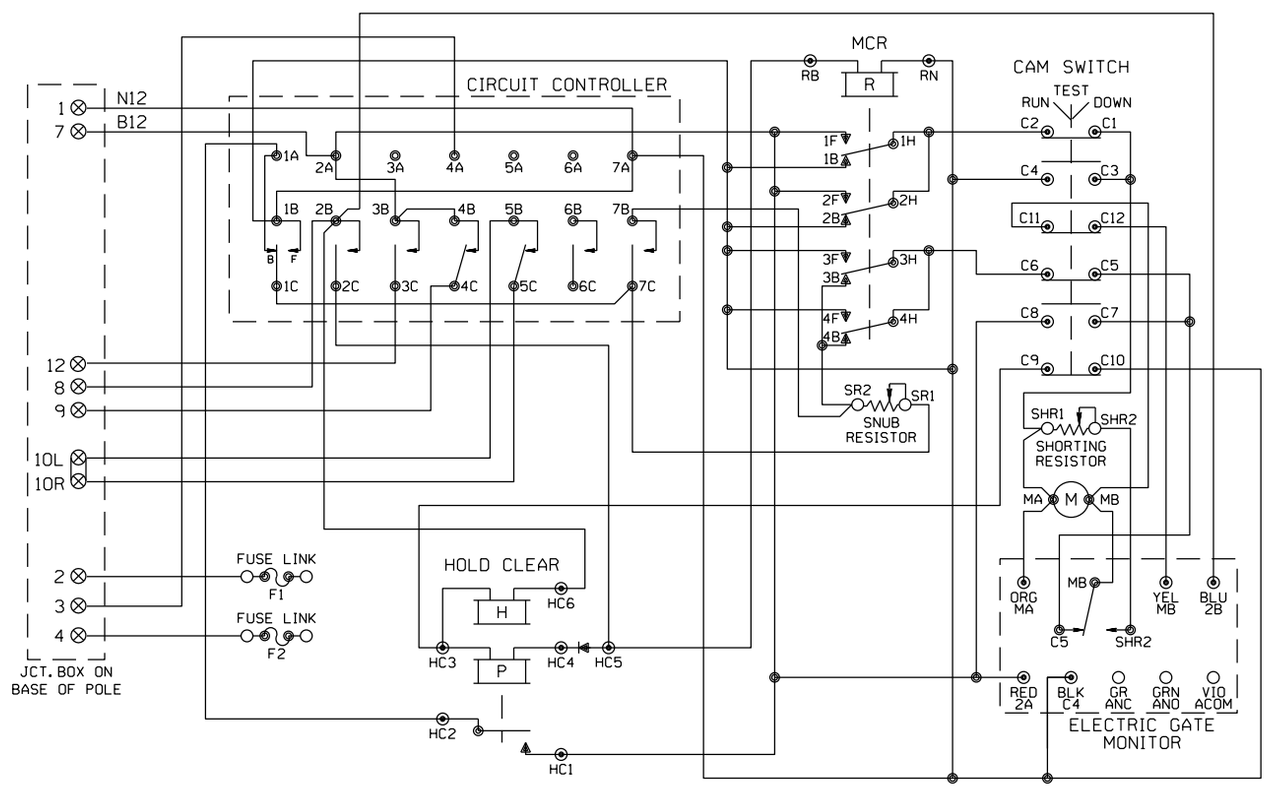

FOR WIRING GATES "A" AND "B"

WCH 3597 ENTRANCE GATE

CONTACT	CLOSED	FUNCTION
1B	75-90	POWER DOWN
1F	0-70	SNUB DOWN
2	0-86	POWER UP
3	0-10	GATE DOWN
4	82-90	GATE CLEAR
5	10-90	BELL
6	SPARE	SPARE
7	0-10	SNUB

MECHANISM SHOWN IN CLEAR POSITION

NEW SHEET

Designed: 08/21/12
TIER 3 PHASE 3
M.P.177.00 TO
M.P.160.00
UPGRADE XINGS AND
CP'S FOR HIGH
SPEED RAIL
Rec#: WO#:22820
IS: MWK/
/ /NST/MJF

MODIFICATION LEVEL	
Q.A. LAST LEVEL CHK'D.	DA
LAST LEVEL MOD. THIS TYP.	CZ
LAST LEVEL BY DESIGNER.	DU
CHANGED FROM TYP.? Y/N	Y

CIRCUIT MODIFICATIONS ARE NOT TO BE MADE WITHOUT AUTHORITY FROM THE OFFICE OF SIGNAL DESIGN

Date: 08/21/12
Des: NST
Chk: MWK
AFE: 22820

UNION PACIFIC RAILROAD
ELKHART, ILLINOIS
OGLESBY STREET
SPRINGFIELD SUBDIVISION
Office of AVP Engineering - Signal Omaha, Nebraska

Sh.: 9
DOT 294267C
MP: 167.26
ID: CSL16726.9X

(REV. 7-9-00) (GWIRING.DGN)

WCH 3593-E

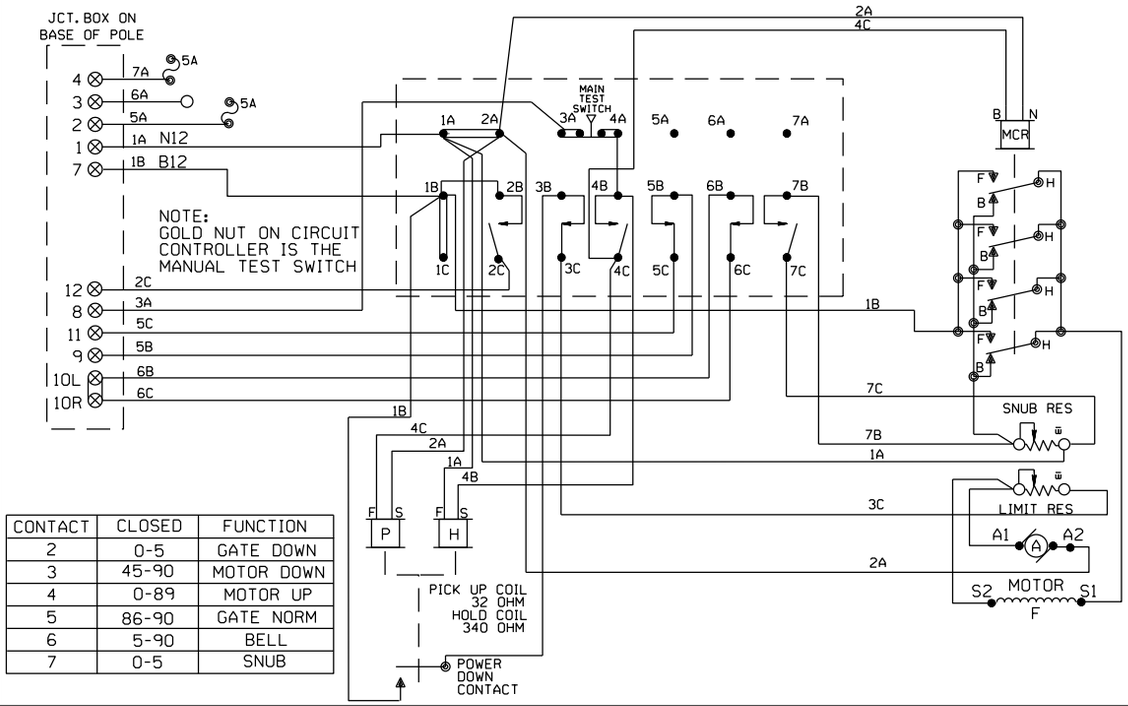

CONTACT	CLOSED	FUNCTION
2	0-5	GATE DOWN
3	45-90	MOTOR DOWN
4	0-89	MOTOR UP
5	86-90	GATE NORM
6	5-90	BELL
7	0-5	SNUB

WCH 3597-E

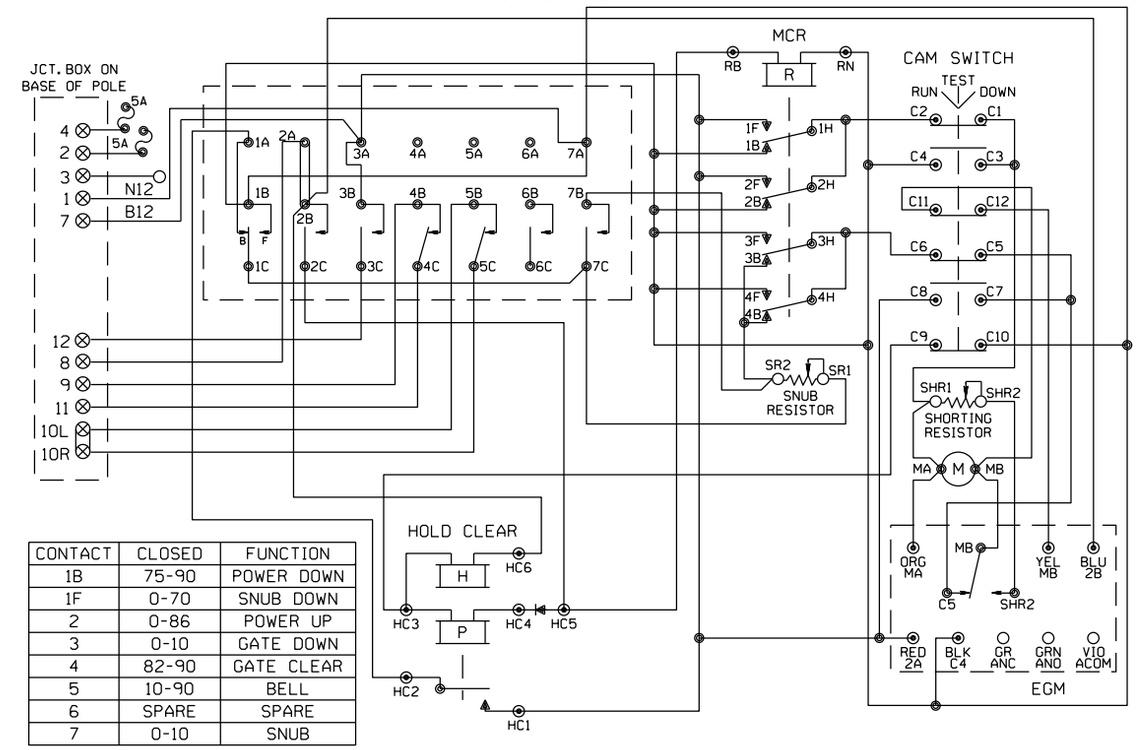

CONTACT	CLOSED	FUNCTION
1B	75-90	POWER DOWN
1F	0-70	SNUB DOWN
2	0-86	POWER UP
3	0-10	GATE DOWN
4	82-90	GATE CLEAR
5	10-90	BELL
6	SPARE	SPARE
7	0-10	SNUB

WCH 3597-RB

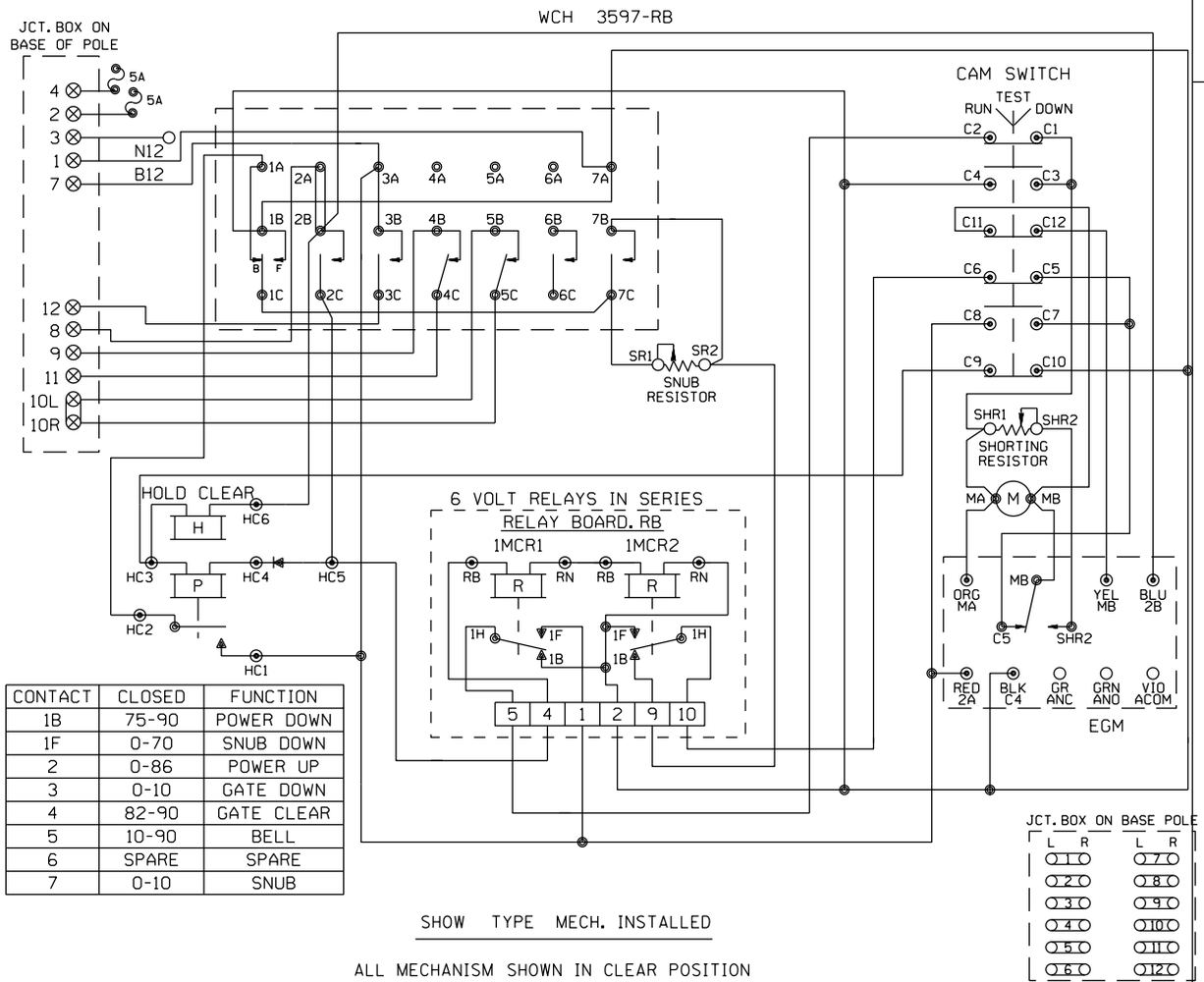

CONTACT	CLOSED	FUNCTION
1B	75-90	POWER DOWN
1F	0-70	SNUB DOWN
2	0-86	POWER UP
3	0-10	GATE DOWN
4	82-90	GATE CLEAR
5	10-90	BELL
6	SPARE	SPARE
7	0-10	SNUB

SHOW TYPE MECH. INSTALLED

ALL MECHANISM SHOWN IN CLEAR POSITION

SAFETRAN S-60

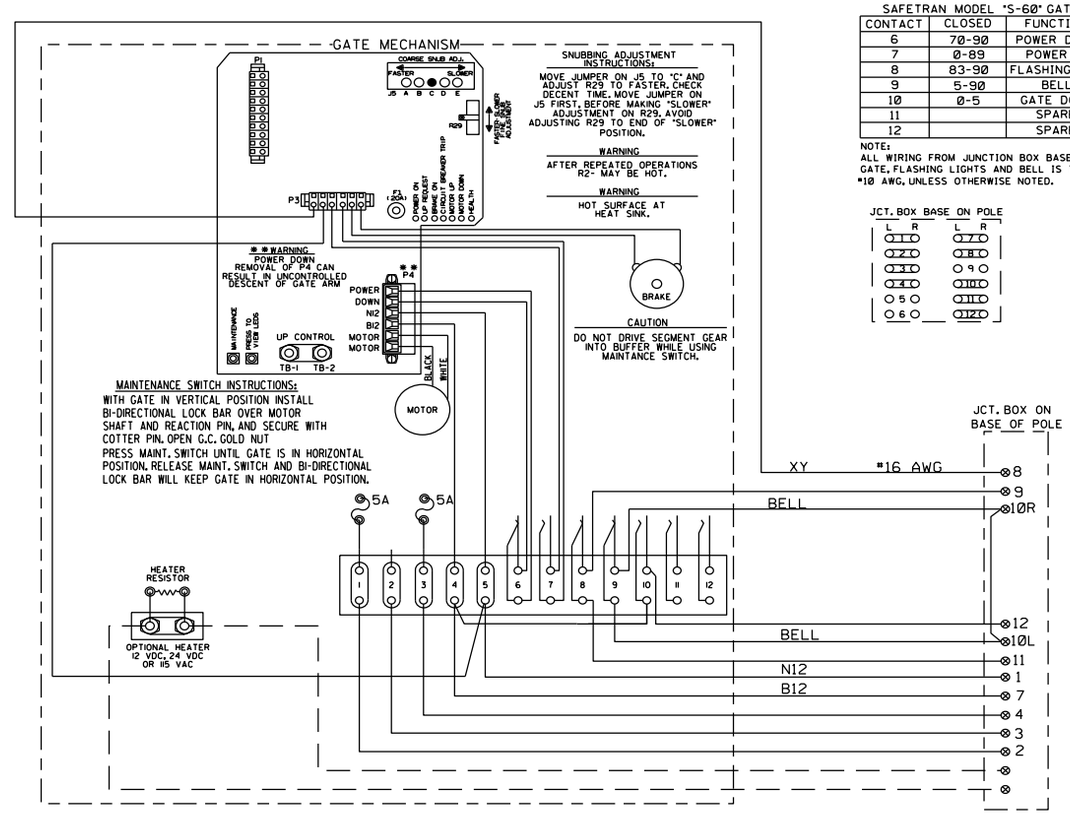

SAFETRAN MODEL "S-60" GATE		
CONTACT	CLOSED	FUNCTION
6	70-90	POWER DOWN
7	0-89	POWER UP
8	83-90	FLASHING LGT.
9	5-90	BELL
10	0-5	GATE DOWN
11		SPARE
12		SPARE

NOTE:
ALL WIRING FROM JUNCTION BOX BASE TO GATE, FLASHING LIGHTS AND BELL IS TO BE #10 AWG, UNLESS OTHERWISE NOTED.

FOR WIRING GATES "E" & "F"

NEW SHEET

Designed: 08/21/12 TIER 3 PHASE 3 M.P.177.00 TO M.P.160.00 UPGRADE XINGS AND CP'S FOR HIGH SPEED RAIL	Rec#: WO#:22820 IS: /MWK / /NST/MJF	MODIFICATION LEVEL		CIRCUIT MODIFICATIONS ARE NOT TO BE MADE WITHOUT AUTHORITY FROM THE OFFICE OF SIGNAL DESIGN
		Q.A. LAST LEVEL CHECKED	DU	
		LAST LEVEL MOD THIS TYPICAL	DU	
		LAST LEVEL BY DESIGNER	DU	
		CHANGED FROM TYPICAL?	N	
		REV 01.24.11 4K GWIRING.7		

Date: 08/21/12	
Des: NST	
Chk: MWK	
AFE: 22820	

UNION PACIFIC RAILROAD

ELKHART, ILLINOIS
OGLESBY STREET
SPRINGFIELD SUBDIVISION

Office of AVP Engineering - Signal — Omaha, Nebraska

Sh.:	10
DOT	294267C
MP:	167.26
ID:	CSL16726.10X

EGMS
PROGRAM INFORMATION

PROGRAM VERSION ~~4.3~~ 4.4

EGMS DISPLAY PARAMETERS

PARAMETER	
STARTUP LOGO	UPRR
BACKLIGHT TIMEOUT	015
BUZZER ENABLE	YES
DIRECTION INDICATORS	↓E ↑W
BUNGALOW QUAD	SB ENTR
DISPLAY QZI	NO
LOCAL PREFIX	'R'
REMOTE PREFIX	'T'
CROSSING NAME	OGLESBY STREET
CROSSING DESCRIPTION	4 QUAD PUB @ GRADE
CROSSING DOT #	294267C

EGMS ALARM PARAMETERS

PARAMETER	
GATO ALARM DELAY	000
GATO GATE DELAY	000
MAX GATE RELEASE	09.0 •
MAX GATE RESPONSE	03.0 •
CYCLE RESTORE	001
MTCD PRESENCE	000
DET FAIL ALARM	YES
DET RESTORE DELAY	000
MAX DET FAILS	000
AUX IN 1 ENABLE	NO
AUX IN 1 RESTORE	000
AUX IN 2 ENABLE	NO
AUX IN 2 RESTORE	000
AUX IN 3 ENABLE	NO
AUX IN 3 RESTORE	000
AUX IN 4 ENABLE	NO
AUX IN 4 RESTORE	000

• ADJUST GATE RELEASE, AND RESPONSE TIMES IN FIELD BASED ON ACTUAL GATE OPERATIONS, AS NECESSARY.

EGMS OPERATIONAL PARAMETERS

PARAMETER	
PRIMARY MODE	DYNAMIC
SECONDARY MODE	NONE
DIS ENTR DETS	NO
DELAY ON DOWN	01.0
REV DET ENABLE	NO
DYNAMIC EGCT	000
TIMED EGCT	012
ISLAND INHIBIT TIME	015
XR DET DISABLE	YES
BIDIR DELAY	04.0
DYN ENTRANCE MONITOR	YES
ENTRANCE DOWN REQ	YES
EXIT UP REQ	NO
EGH SENSE	B12 HOLDS
ISL 2 ENABLE	NO
DUAL EGMS ENABLED	NO

EGMS AUX OUTPUT MAPPING

PARAMETER	
AUX OUT 1 FUNCTION	DET XRISL
AUX OUT 1 SOURCE	BOTH
AUX OUT 2 FUNCTION	DET HLTH
AUX OUT 2 SOURCE	BOTH
AUX OUT 3 FUNCTION	GP
AUX OUT 3 SOURCE	BOTH
AUX OUT 4 FUNCTION	~~ALARM~~ DET OBSTL
AUX OUT 4 SOURCE	BOTH

GATE PARAMETERS

GATE	1(A)	2(B)	3(C)	4(D)	5(E)	6(F)	7(G)	8(H)
GATE TYPE	ENTRANCE	ENTRANCE	EXIT	EXIT	NONE•	NONE•	NONE•	NONE•
GATE DIRECTION	↓E	↑W	↓E	↑W	↓S	↓S	↓S	↓S
VERTICAL CHATTER TIME	01.0	01.0	01.0	01.0	02.0	02.0	02.0	02.0
HORIZONTAL CHATTER TIME	01.0	01.0	01.0	01.0	02.0	02.0	02.0	02.0
MINIMUM ASCENT TIME	003	003	003	003	003	003	003	003
MAXIMUM ASCENT TIME	015	015	015	015	015	015	015	015
MINIMUM DESCENT TIME	003	003	003	003	003	003	003	003
MAXIMUM DESCENT TIME	015	015	015	015	015	015	015	015

• GATE TYPE = "NONE" ALL OTHER PARAMETERS IGNORED

DETECTOR PARAMETERS

	(1) E-1400				(2) E-1400				(3) E-1400				(4) E-1400			
DETECTOR	1	2	3	4	5	6	7	8	9	10	11	12	13	14	15	16
DETECTOR TYPE	ENTR	ENTR	EXIT	EXIT	INT	INT	INT	INT	NONE	NONE	NONE	NONE	NONE	NONE	NONE	NONE
DETECTOR DIRECTION	↓E	↑W	↓E	↑W	↓E	↑W	↓E	↓W	↓S	↓S	↓S	↓S	↓S	↓S	↓S	↓S
STRETCH TIME•	01.0	01.0	01.0	01.0	01.0	01.0	01.0	01.0	01.0	01.0	01.0	01.0	01.0	01.0	01.0	01.0
LONG-TERM OBSTRUCTION	001	001	001	001	001	001	001	001	000	000	000	000	000	000	000	000
DISABLE ON DOWN	NO	NO	NO	NO	NO	NO	NO	NO	NO	NO	NO	NO	NO	NO	NO	NO
AUX OUTPUT 1	YES	YES	YES	YES	YES	YES	YES	YES	YES	YES	YES	YES	YES	YES	YES	YES
AUX OUTPUT 2	YES	YES	YES	YES	YES	YES	YES	YES	YES	YES	YES	YES	YES	YES	YES	YES
AUX OUTPUT 3	YES	YES	YES	YES	YES	YES	YES	YES	YES	YES	YES	YES	YES	YES	YES	YES
AUX OUTPUT 4	YES	YES	YES	YES	YES	YES	YES	YES	YES	YES	YES	YES	YES	YES	YES	YES

• INCREASE STRETCH TIME AS NECESSARY TO MAINTAIN VEHICLE DETECTION FROM LOOP TO LOOP.
•• DETECTORS 5 - 16 DEFAULT TO "NONE" AND MUST BE CONFIGURED MANUALLY
DETECTORS 5 & 6 DEFAULT TO "INT" WHEN 2TK DEFAULT CONFIGURATION IS SELECTED.
WHEN DETECTOR TYPE IS "NONE", ALL OTHER PARAMETERS IGNORED.

= IN
~~= OUT~~

~~NEW SHEET~~

Designed: 2/25/15
TIER 3 PHASE 3
M.P.177.00 TO
M.P.160.00
HSR SCOPE CHANGE
Rec*: WO*: 22820
IS: MWK/
/ /NST/JVJ

Designed: 08/21/12
TIER 3 PHASE 3
M.P.177.00 TO
M.P.160.00
UPGRADE XINGS AND
CP'S FOR HIGH
SPEED RAIL
Rec*: WO*: 22820
IS: MWK/
/ /NST/MJF

MODIFICATION LEVEL	
O. A. LAST LEVEL CHECKED	DU
LAST LEVEL MOD THIS TYPICAL	DU
LAST LEVEL BY DESIGNER	DU
CHANGED FROM TYPICAL?	Y

REV 01.24.11 4K 2TKEGMS.8

CIRCUIT MODIFICATIONS ARE NOT TO BE MADE WITHOUT AUTHORITY FROM THE OFFICE OF SIGNAL DESIGN

Date: 08/21/12
Des: NST
Chk: MWK
AFE: 22820

UNION PACIFIC RAILROAD
ELKHART, ILLINOIS
OGLESBY STREET
SPRINGFIELD SUBDIVISION
Office of AVP Engineering - Signal Omaha, Nebraska

Sh.: 11
DOT 294267C
MP: 167.26
ID: CSL16726.11X

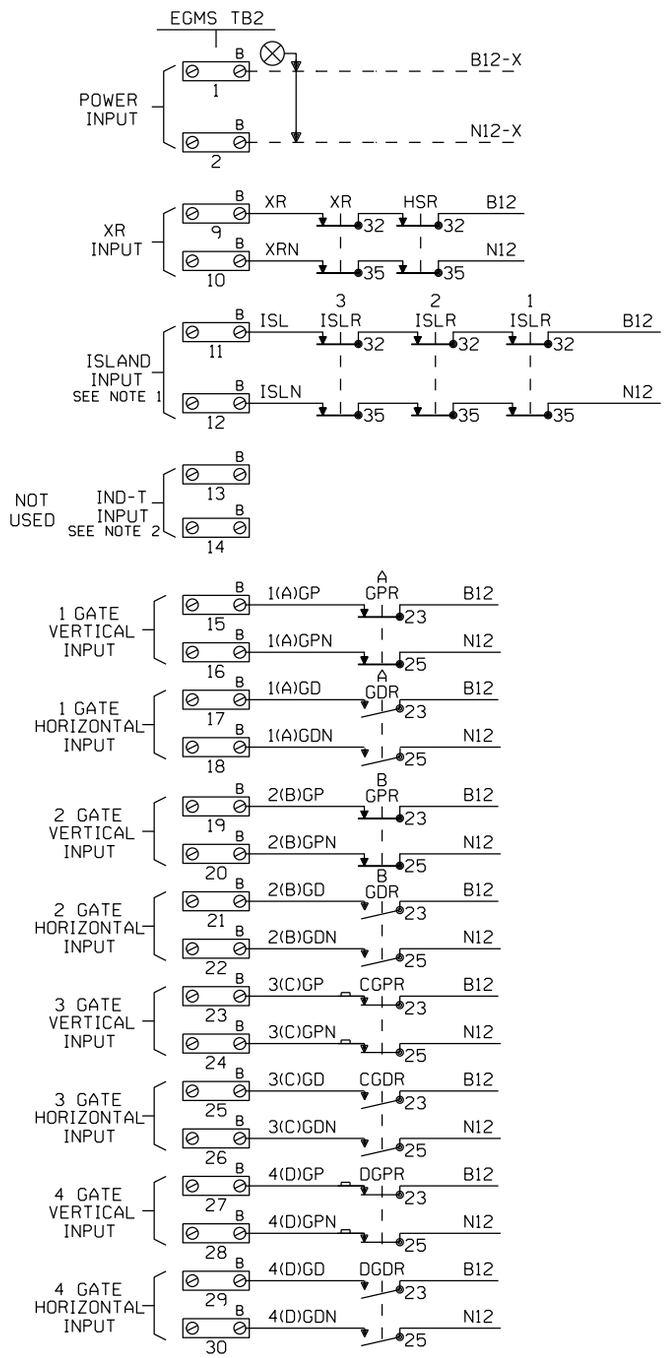

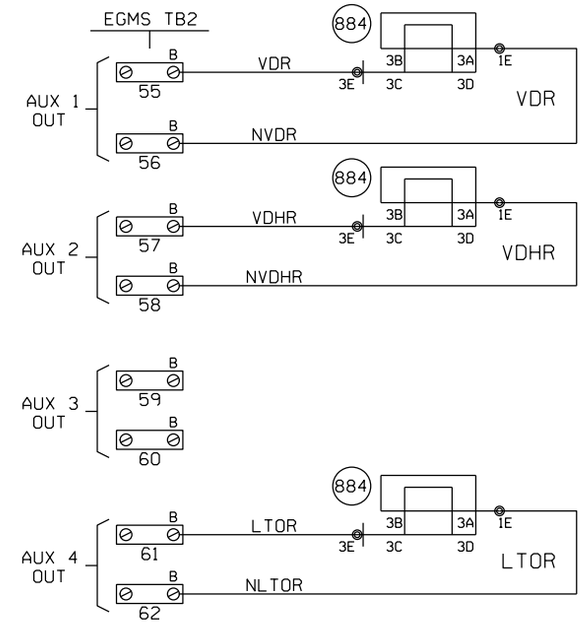

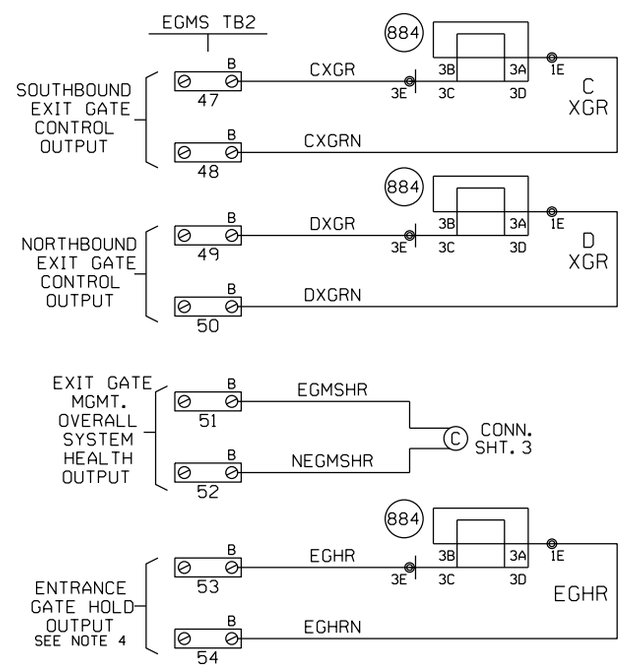

NOTES

1. EGMS ISL1 INPUT: "AND" ISLAND INPUTS FROM ALL TRACKS. NOTE THAT WHEN THIS INPUT IS DE-ENERGIZED THE XR INPUT ON TB2, 9 & 10 MUST ALSO BE DE-ENERGIZED BEFORE THE EXIT GATES MAY BE DRIVEN DOWN.
2. EGMS ISL2 INPUT: MAY BE USED FOR STAND ALONE ISLAND INPUT. THIS INPUT IS NOT DEPENDENT UPON THE STATUS OF XR INPUT ON TB2, 9 & 10. THIS INPUT MUST BE FIELD SELECTED AND ENABLED DURING EGMS SETUP.
3. ALL WIRING TO EGMS TO BE #16 AWG FLEX.
4. ENTRANCE GATE HOLD (EGH) CAN BE PROGRAMMED AS A NORMALLY ENERGIZED OR NORMALLY DE-ENERGIZED OUTPUT.

NEW SHEET

Designed: 08/21/12
TIER 3 PHASE 3
M.P.177.00 TO M.P.160.00
UPGRADE XINGS AND CP'S FOR HIGH SPEED RAIL
Rec#: WO#: 22820
IS: MWK/ / /NST/MJF

MODIFICATION LEVEL	
Q.A. LAST LEVEL CHECKED	DU
LAST LEVEL MOD THIS TYPICAL	DU
LAST LEVEL BY DESIGNER	DU
CHANGED FROM TYPICAL?	Y

REV 01.24.11 4K 2TKEGMS.8A

CIRCUIT MODIFICATIONS ARE NOT TO BE MADE WITHOUT AUTHORITY FROM THE OFFICE OF SIGNAL DESIGN

Date: 08/21/12
Des: NST
Chk: MWK
AFE: 22820

UNION PACIFIC RAILROAD
ELKHART, ILLINOIS
OGLESBY STREET
SPRINGFIELD SUBDIVISION
Office of AVP Engineering - Signal Omaha, Nebraska

Sh.: 11A
DOT 294267C
MP: 167.26
ID: CSL16726.11AX

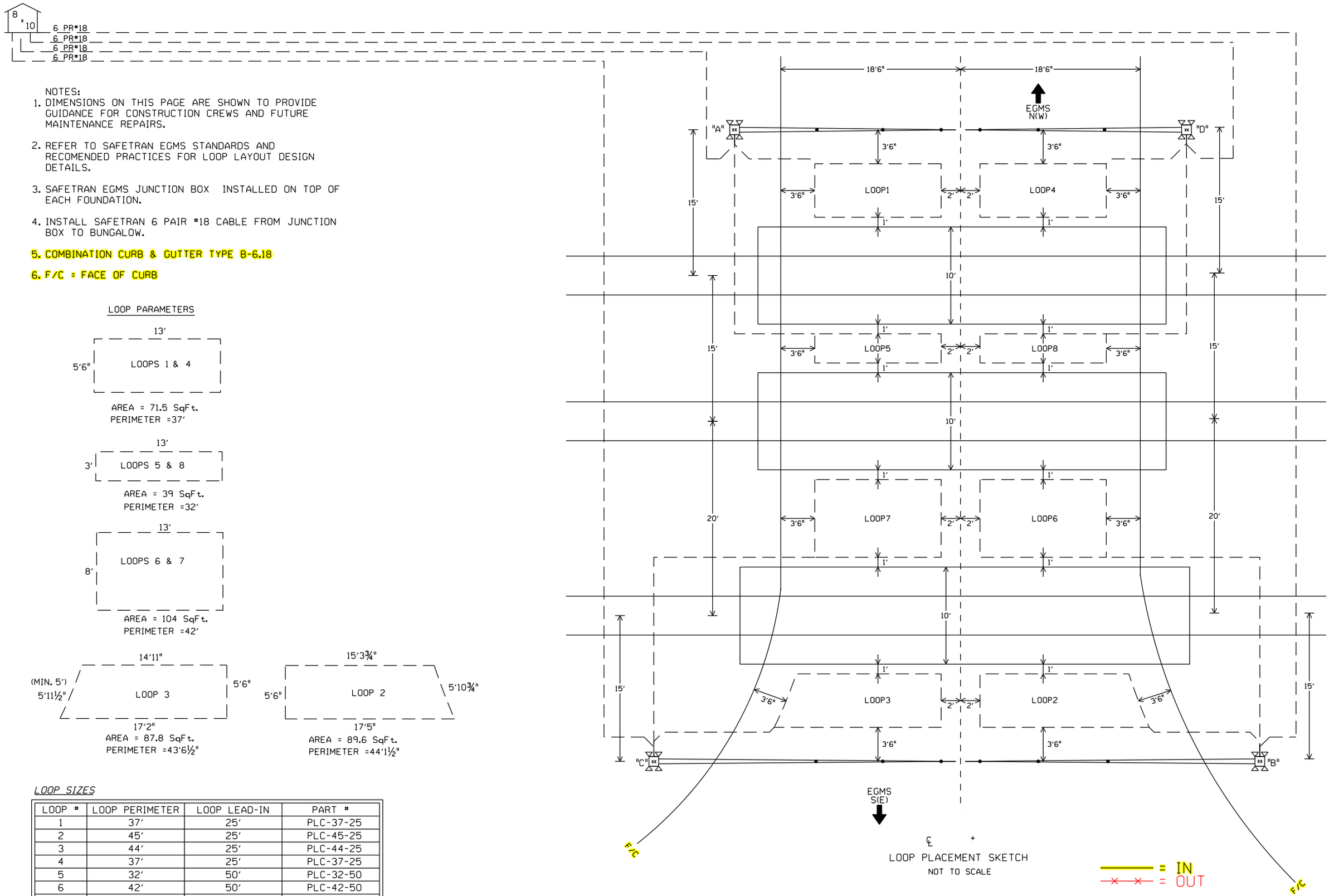

NOTES:

1. DIMENSIONS ON THIS PAGE ARE SHOWN TO PROVIDE GUIDANCE FOR CONSTRUCTION CREWS AND FUTURE MAINTENANCE REPAIRS.
2. REFER TO SAFETRAN EGMS STANDARDS AND RECOMENDED PRACTICES FOR LOOP LAYOUT DESIGN DETAILS.
3. SAFETRAN EGMS JUNCTION BOX INSTALLED ON TOP OF EACH FOUNDATION.
4. INSTALL SAFETRAN 6 PAIR #18 CABLE FROM JUNCTION BOX TO BUNGALOW.
5. COMBINATION CURB & GUTTER TYPE B-6.18
6. F/C = FACE OF CURB

LOOP PARAMETERS

13'
5'6" LOOPS 1 & 4
AREA = 71.5 SqFt.
PERIMETER =37'

13'
3' LOOPS 5 & 8
AREA = 39 SqFt.
PERIMETER =32'

13'
8' LOOPS 6 & 7
AREA = 104 SqFt.
PERIMETER =42'

14'11"
(MIN. 5') 5'11½" LOOP 3 5'6"
17'2"
AREA = 87.8 SqFt.
PERIMETER =43'6½"

15'3¾"
5'6" LOOP 2 5'10¾"
17'5"
AREA = 89.6 SqFt.
PERIMETER =44'1½"

LOOP SIZES

LOOP #	LOOP PERIMETER	LOOP LEAD-IN	PART #
1	37'	25'	PLC-37-25
2	45'	25'	PLC-45-25
3	44'	25'	PLC-44-25
4	37'	25'	PLC-37-25
5	32'	50'	PLC-32-50
6	42'	50'	PLC-42-50
7	42'	50'	PLC-42-50
8	32'	50'	PLC-32-50

~~NEW SHEET~~

Designed: 2/25/15
TIER 3 PHASE 3
M.P.177.00 TO
M.P.160.00
HSR SCOPE CHANGE
Rec#: WO#:22820
IS: MWK/
/NST/JVJ

Designed: 08/21/12
TIER 3 PHASE 3
M.P.177.00 TO
M.P.160.00
UPGRADE XINGS AND
CP'S FOR HIGH
SPEED RAIL
Rec#: WO#:22820
IS: MWK/
/NST/MJF

MODIFICATION LEVEL	
Q. A. LAST LEVEL CHECKED	DU
LAST LEVEL MOD THIS TYPICAL	DU
LAST LEVEL BY DESIGNER	DU
CHANGED FROM TYPICAL?	Y

REV 01.24.11 4K 2TKEGMS.8B

CIRCUIT MODIFICATIONS ARE NOT TO BE MADE WITHOUT AUTHORITY FROM THE OFFICE OF SIGNAL DESIGN

Date: 08/21/12
Des: NST
Chk: MWK
AFE: 22820

UNION PACIFIC RAILROAD
ELKHART, ILLINOIS
OGLESBY STREET
SPRINGFIELD SUBDIVISION
Office of AVP Engineering - Signal Omaha, Nebraska

Sh.: 11B
DOT 294267C
MP: 167.26
ID: CSL16726.11BX

(1) E-1400 SETUP PARAMETERS

FUNCTION	CH. 1	CH. 2	CH. 3	CH. 4
FREQUENCY SETTING	2	4	6	8
SENSITIVIY SETTING	6•	6•	6•	6•
OPTION 1 (TEMP L DISPLAY)	OFF			
OPTION 2 (TEMP ΔL/L DISPLAY)	OFF			
OPTION 3 (NOISE FILTER)	3.00	3.00	3.00	3.00
OPTION 4 (TRACKING)	4.02	4.02	4.02	4.02
OPTION 5 (SENSITIVITY BOOST)	5.00	5.00	5.00	5.00
OPTION 6 (TEMP AUDIBLE SIGNAL)	OFF	OFF	OFF	OFF
CHECKLOOP INTERVAL	005	005	005	005
DETECTOR ID	000			
OPTION 7 (DETECTOR SYNC)	7.01			
OPTION 8 (ISL OPTION)	OFF			
OPTION 9 (SHUNT ENHANCEMENT SE)	OFF	OFF	OFF	OFF
MAIN VITAL OUTPUT DELAY	00.0	00.0	00.0	00.0
MAIN VITAL OUTPUT EXTENSION	00.0	00.0	00.0	00.0
MAIN VITAL OUTPUT MAPPING	10	20	40	80
AUX VITAL OUTPUT MAPPING	001	002	004	008
LOOP FREQUENCY (Khz)				
LOOP INDUCTANCE (MICRO HENRIES)				

SOFTWARE VERSION 4.02
• FIELD VERIFY

(2) E-1400 SETUP PARAMETERS

FUNCTION	CH. 1	CH. 2	CH. 3	CH. 4
FREQUENCY SETTING	2	4	6	8
SENSITIVIY SETTING	6•	6•	OFF•	OFF•
OPTION 1 (TEMP L DISPLAY)	OFF			
OPTION 2 (TEMP ΔL/L DISPLAY)	OFF			
OPTION 3 (NOISE FILTER)	3.00	3.00	3.00	3.00
OPTION 4 (TRACKING)	4.02	4.02	4.02	4.02
OPTION 5 (SENSITIVITY BOOST)	5.00	5.00	5.00	5.00
OPTION 6 (TEMP AUDIBLE SIGNAL)	OFF	OFF	OFF	OFF
CHECKLOOP INTERVAL	005	005	005	005
DETECTOR ID	001			
OPTION 7 (DETECTOR SYNC)	7.01			
OPTION 8 (ISL OPTION)	OFF			
OPTION 9 (SHUNT ENHANCEMENT SE)	OFF	OFF	OFF	OFF
MAIN VITAL OUTPUT DELAY	00.0	00.0	00.0	00.0
MAIN VITAL OUTPUT EXTENSION	00.0	00.0	00.0	00.0
MAIN VITAL OUTPUT MAPPING	10	20	40	80
AUX VITAL OUTPUT MAPPING	001	002	004	008
LOOP FREQUENCY (Khz)				
LOOP INDUCTANCE (MICRO HENRIES)				

SOFTWARE VERSION 4.02
• FIELD VERIFY

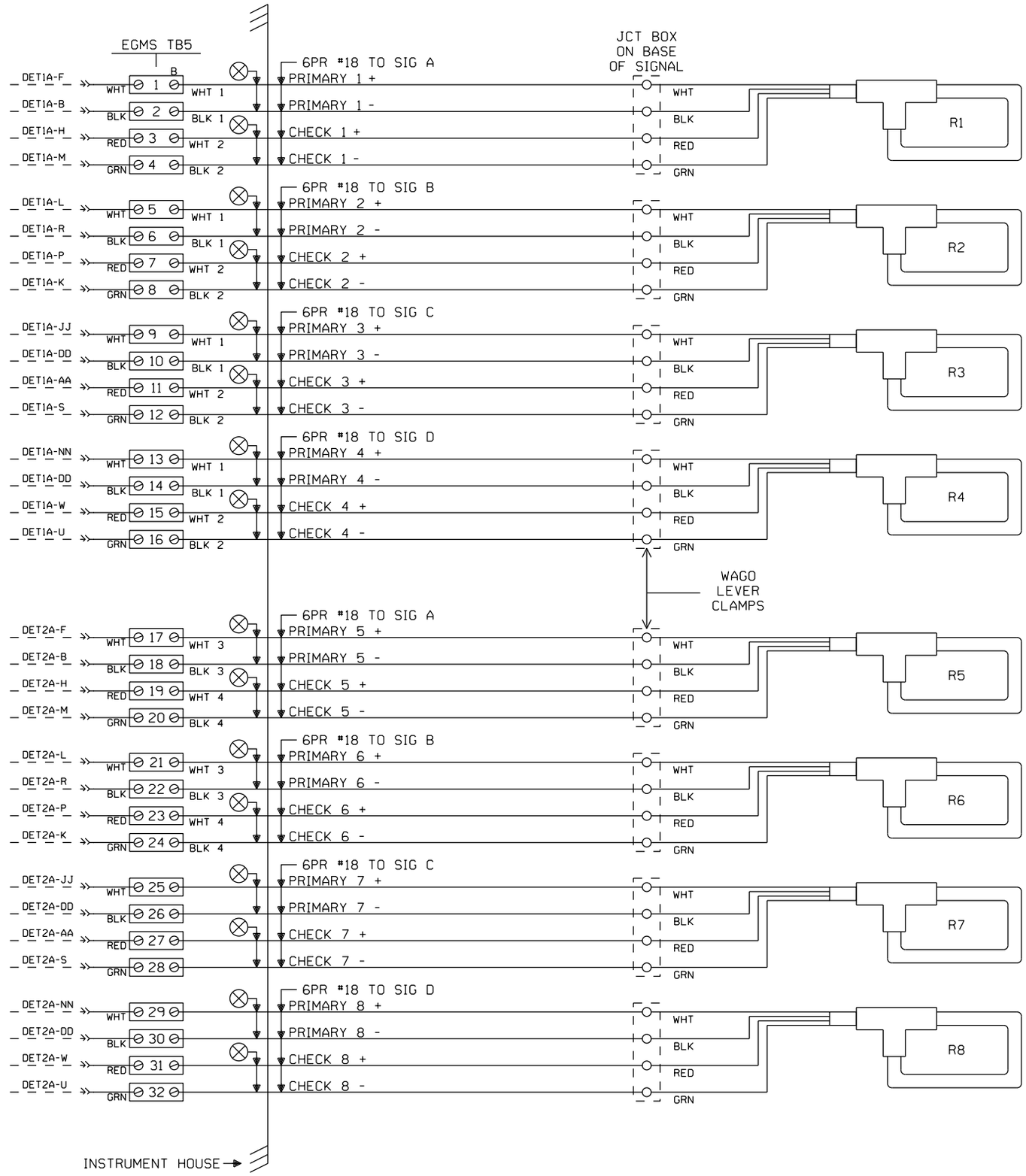

CABLE TABULATION

CABLE NO. (23) 6/PR #18 U.G.C. TO JCT BOX ON BASE OF GATE "A" (RCL PART #03-094-005)
CABLE NO. (24) 6/PR #18 U.G.C. TO JCT BOX ON BASE OF GATE "B" (RCL PART #03-094-005)
CABLE NO. (25) 6/PR #18 U.G.C. TO JCT BOX ON BASE OF GATE "C" (RCL PART #03-094-005)
CABLE NO. (26) 6/PR #18 U.G.C. TO JCT BOX ON BASE OF GATE "D" (RCL PART #03-094-005)

NEW SHEET

Designed: 08/21/12
TIER 3 PHASE 3
M.P.177.00 TO
M.P.160.00
UPGRADE XINGS AND
CP'S FOR HIGH
SPEED RAIL
Rec#: WO#: 22820
IS: MWK/
/ /NST/MJF

MODIFICATION LEVEL	
Q.A. LAST LEVEL CHECKED	DU
LAST LEVEL MOD THIS TYPICAL	DU
LAST LEVEL BY DESIGNER	DU
CHANGED FROM TYPICAL?	Y

REV 01.24.11 4K 2TKEGMS.9

CIRCUIT MODIFICATIONS ARE NOT TO BE MADE WITHOUT AUTHORITY FROM THE OFFICE OF SIGNAL DESIGN

Date: 08/21/12
Des: NST
Chk: MWK
AFE: 22820

UNION PACIFIC RAILROAD
ELKHART, ILLINOIS
OGLESBY STREET
SPRINGFIELD SUBDIVISION
Office of AVP Engineering - Signal Omaha, Nebraska

Sh.: 12
DOT 294267C
MP: 167.26
ID: CSL16726.12X

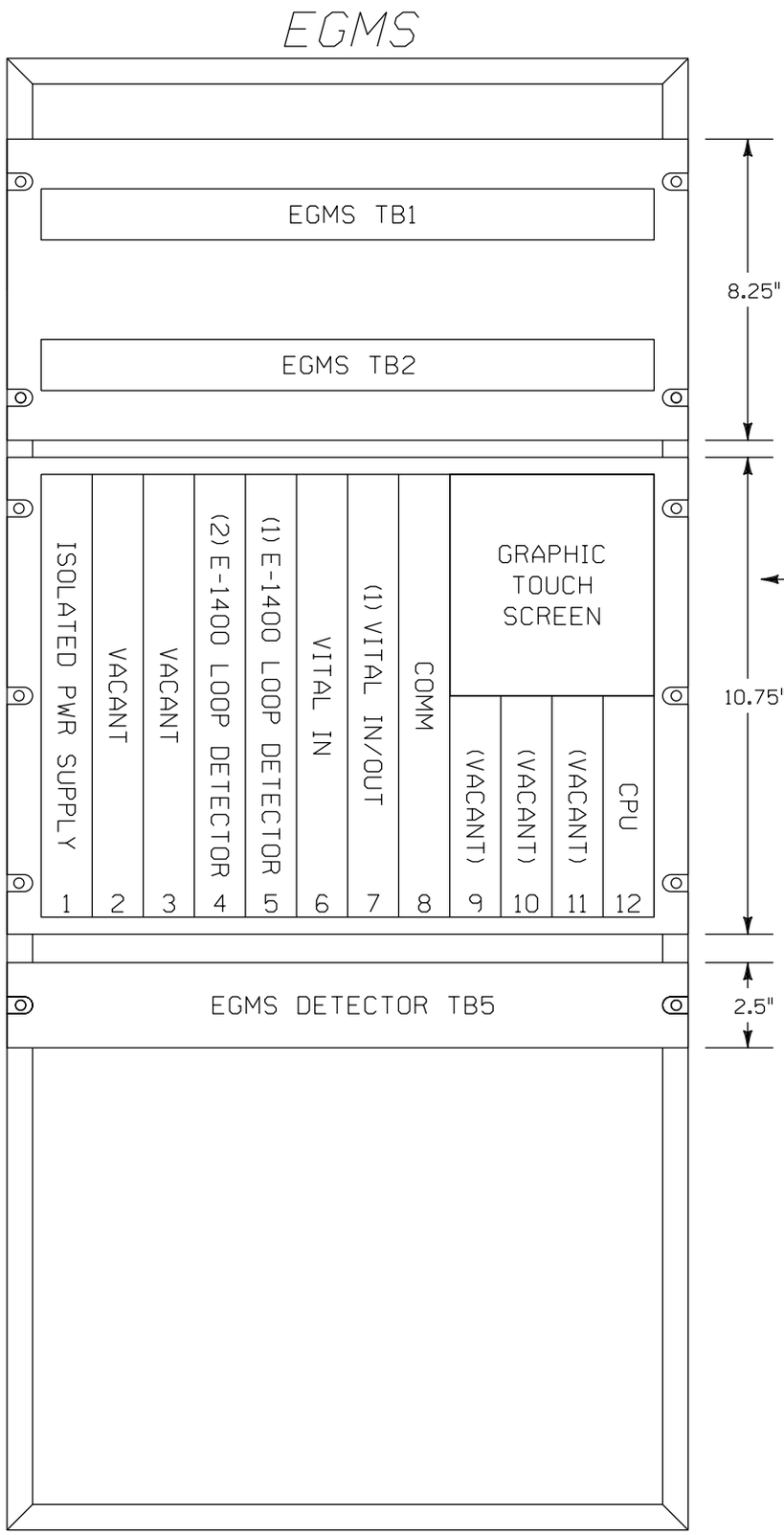

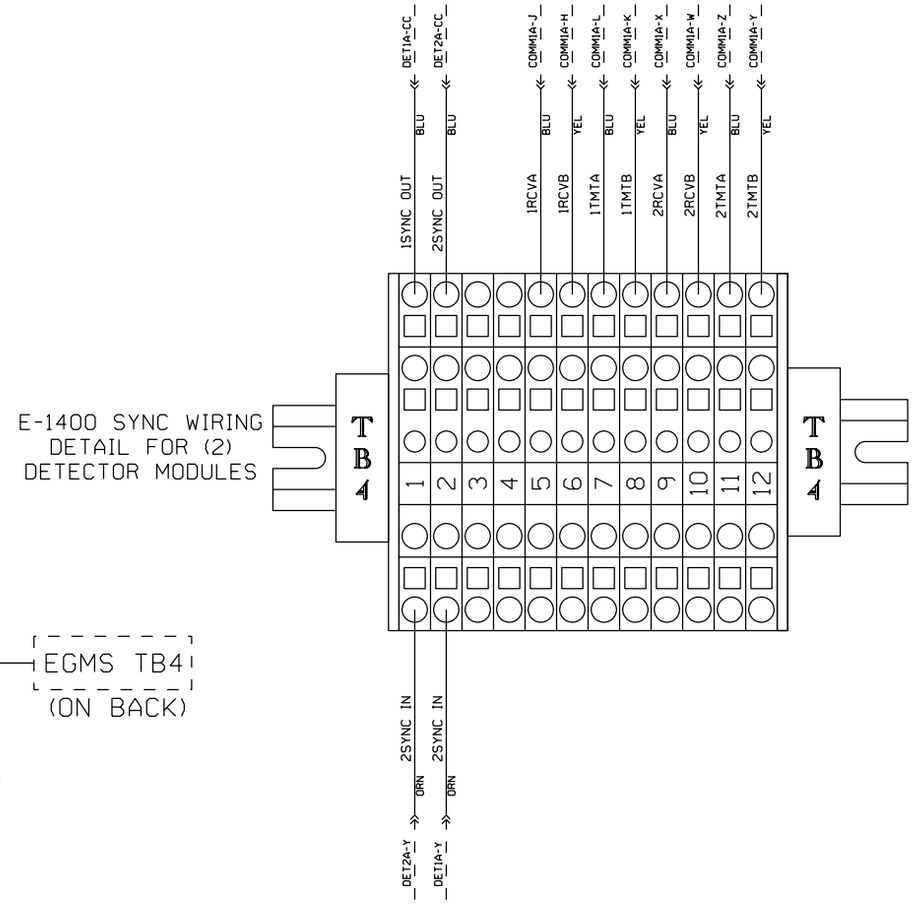

NEW SHEET

					Designed: 08/21/12 TIER 3 PHASE 3 M.P.177.00 TO M.P.160.00 UPGRADE XINGS AND CP'S FOR HIGH SPEED RAIL Rec#: WO#:22820 IS: MWK/ / /NST/MJF	MODIFICATION LEVEL		CIRCUIT MODIFICATIONS ARE NOT TO BE MADE WITHOUT AUTHORITY FROM THE OFFICE OF SIGNAL DESIGN	Date: 08/21/12	UNION PACIFIC RAILROAD	Sh.: 12A
						Q. A. LAST LEVEL CHECKED	DU		Des: NST	ELKHART, ILLINOIS OGLESBY STREET SPRINGFIELD SUBDIVISION	DOT 294267C
						LAST LEVEL MOD THIS TYPICAL	DU		Chk: MWK		MP: 167.26
						LAST LEVEL BY DESIGNER	DU		AFE: 22820		ID: CSL16726.12AX
						CHANGED FROM TYPICAL?	Y				
						REV 01.24.11 4K 2TKEGMS.9B				Office of AVP Engineering - Signal Omaha, Nebraska	

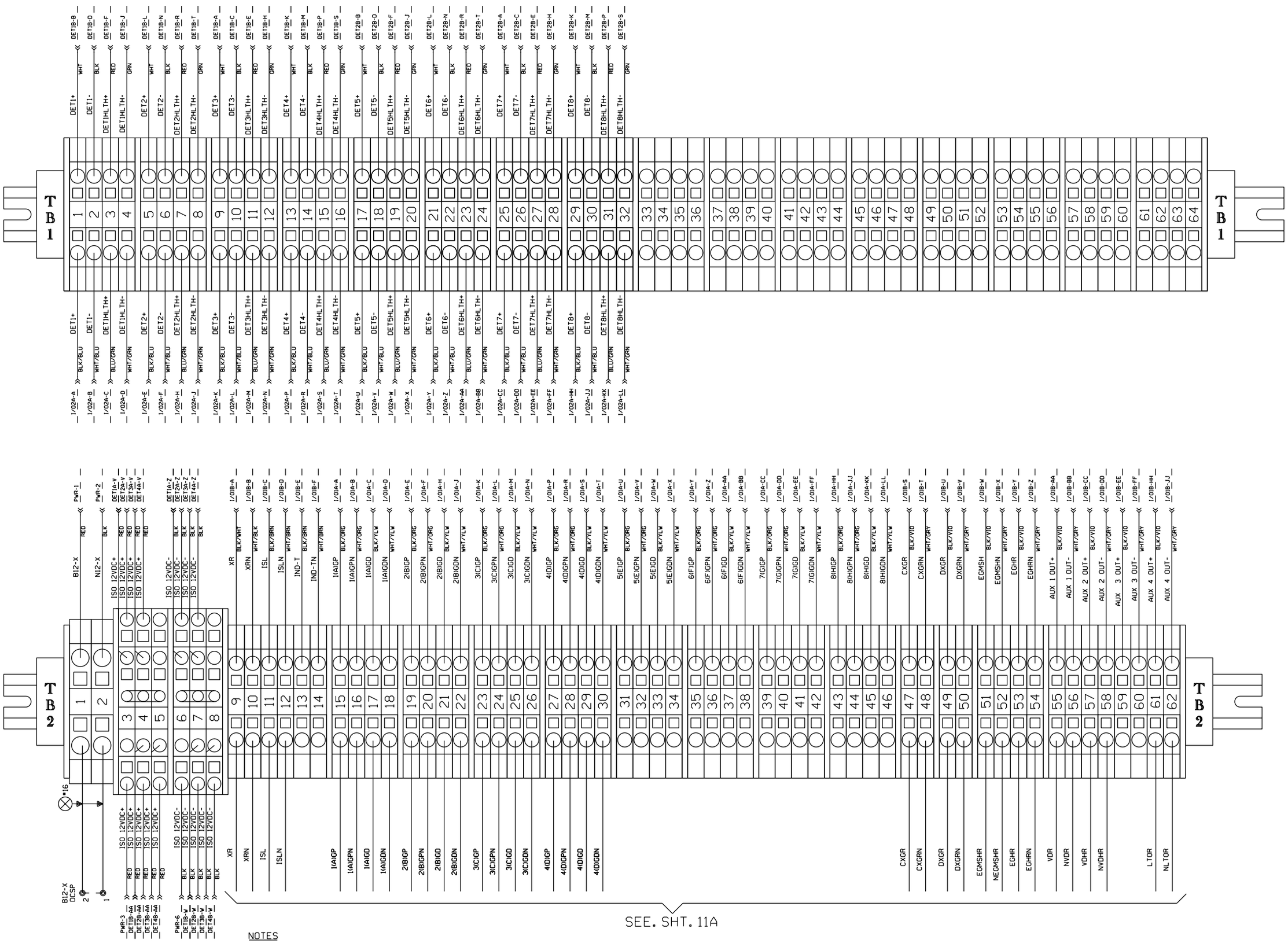

NOTES

1. TB1 PROVIDES AN EXTERNAL PASS THROUGH BETWEEN THE E-1400 MODULES AND THE VITAL INPUT MODULE IN CHASSIS POSITION 6. EGMS OR EGMS+ UNITS CONFIGURED FOR LESS THAN 4 EACH E-1400 MODULES WILL ONLY BE WIRED AS REQUIRED.
2. TB2-3 THROUGH TB2-8 PROVIDE A CONNECTION BUS FOR INTERNAL SUPPLY VOLTAGES AND MUST NOT BE USED TO SUPPLY OTHER CIRCUITS.

NEW SHEET

					Designed: 08/21/12 TIER 3 PHASE 3 M.P.177.00 TO M.P.160.00 UPGRADE XINGS AND CP'S FOR HIGH SPEED RAIL Rec#: WO#: 22820 IS: MWK/ / /NST/MJF	MODIFICATION LEVEL Q.A. LAST LEVEL CHECKED DU LAST LEVEL MOD THIS TYPICAL DU LAST LEVEL BY DESIGNER DU CHANGED FROM TYPICAL? Y REV 01.24.11 4K 2TKEGMS.9C	CIRCUIT MODIFICATIONS ARE NOT TO BE MADE WITHOUT AUTHORITY FROM THE OFFICE OF SIGNAL DESIGN	Date: 08/21/12 Des: NST Chk: MWK AFE: 22820	UNION PACIFIC RAILROAD ELKHART, ILLINOIS OGLESBY STREET SPRINGFIELD SUBDIVISION Office of AVP Engineering - Signal Omaha, Nebraska	Sh.: 12B DOT 294267C MP: 167.26 ID: CSL16726.12BX

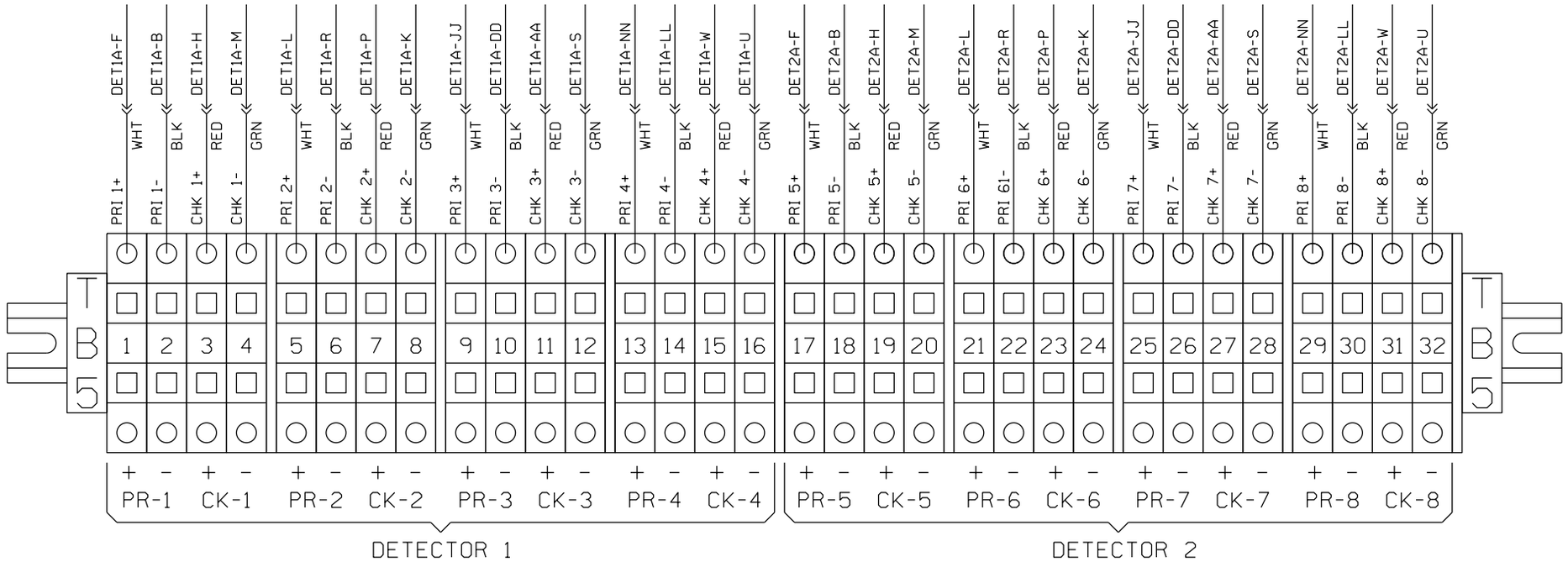

NEW SHEET

					Designed: 08/21/12 TIER 3 PHASE 3 M.P.177.00 TO M.P.160.00 UPGRADE XINGS AND CP'S FOR HIGH SPEED RAIL Rec#: WO#:22820 IS: MWK/ / /NST/MJF	MODIFICATION LEVEL O. A. LAST LEVEL CHECKED DU LAST LEVEL MOD THIS TYPICAL DU LAST LEVEL BY DESIGNER DU CHANGED FROM TYPICAL? Y REV 01.24.11 4K 2TKEGMS.9D	CIRCUIT MODIFICATIONS ARE NOT TO BE MADE WITHOUT AUTHORITY FROM THE OFFICE OF SIGNAL DESIGN	Date: 08/21/12 Des: NST Chk: MWK AFE: 22820	UNION PACIFIC RAILROAD ELKHART, ILLINOIS OGLESBY STREET SPRINGFIELD SUBDIVISION Office of AVP Engineering - Signal Omaha, Nebraska	Sh.: 12C DOT 294267C MP: 167.26 ID: CSL16726.12CX

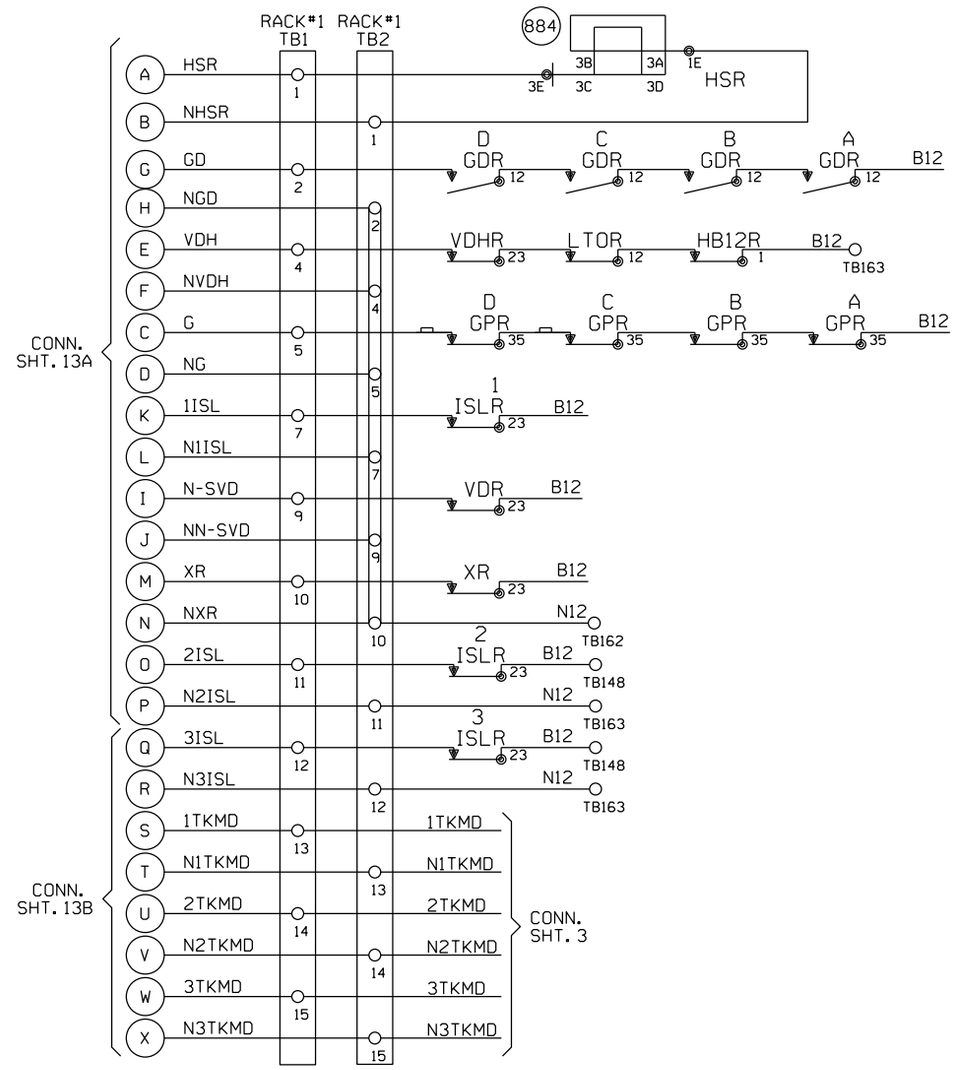

NEW SHEET

Designed: 08/21/12
TIER 3 PHASE 3
M.P.177.00 TO
M.P.160.00
UPGRADE XINGS AND
CP'S FOR HIGH
SPEED RAIL
Rec#: WO#:22820
IS: MWK/
/ /NST/MJF

CIRCUIT MODIFICATIONS ARE NOT TO BE MADE WITHOUT AUTHORITY FROM THE OFFICE OF SIGNAL DESIGN

Date: 08/21/12
Des: NST
Chk: MWK
AFE: 22820

UNION PACIFIC RAILROAD
ELKHART, ILLINOIS
OGLESBY STREET
SPRINGFIELD SUBDIVISION
Office of AVP Engineering - Signal
Omaha, Nebraska

Sh.: 13
DOT 294267C
MP: 167.26
ID: CSL16726.13X

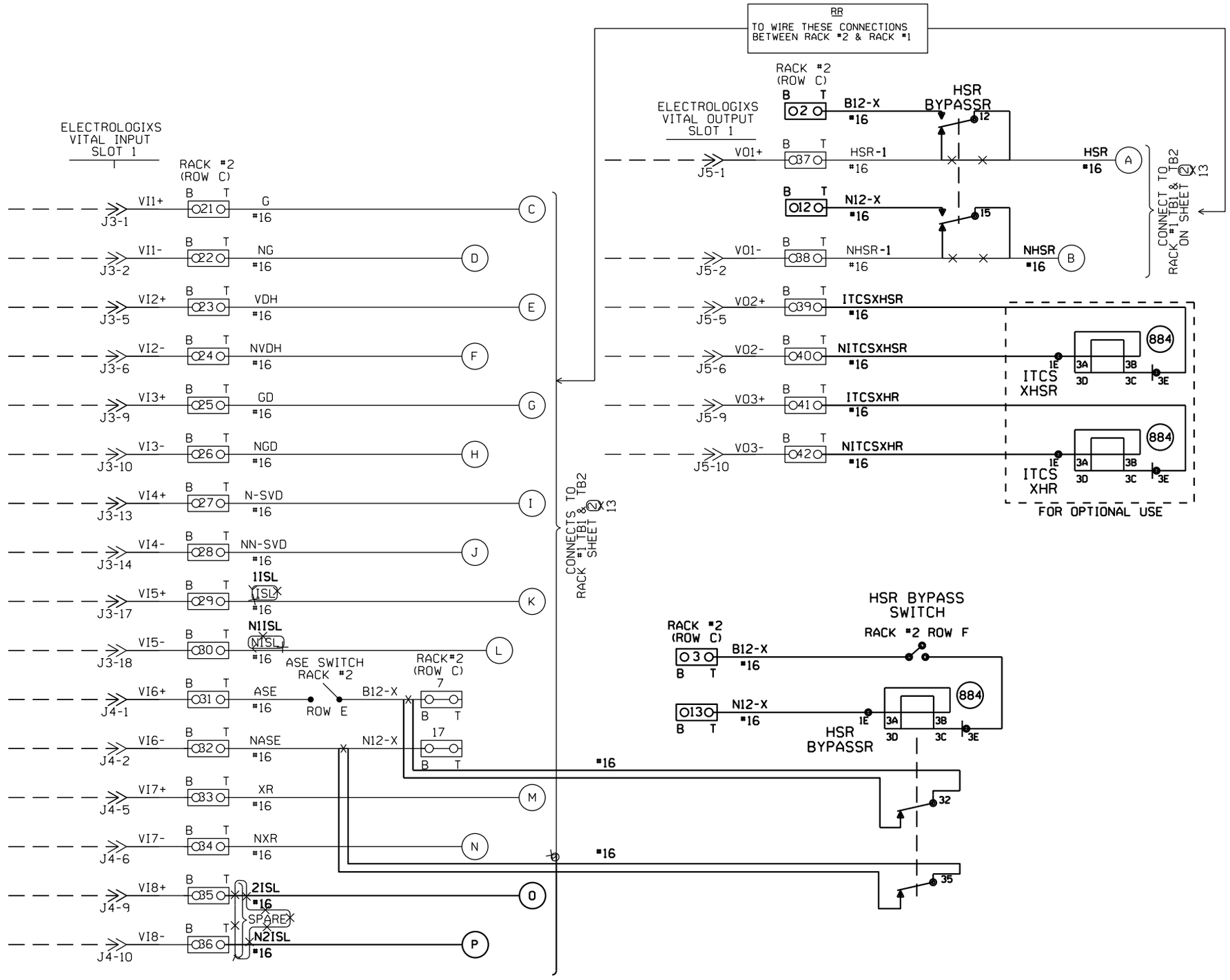

NOTES:

1. INPUT WIRES, OUTPUT WIRES, POWER WIRES, PUT IN SEPARATE BUNDLES.
2. ALL WIRES #16 UNLESS NOTED.
3. O?? O 2 POSITION WAGO BLOCK.

——— = IN
—×—×— = OUT

NEW SHEET

						Designed: 08/21/12 TIER 3 PHASE 3 M.P.177.00 TO M.P.160.00 UPGRADE XINGS AND CP'S FOR HIGH SPEED RAIL Rec#: WO#:22820 IS: MWK/ /NST/MJF	02-24-09 INSTALL MONITOR RACK FOR XINGS W.O. 87933 MAS	CIRCUIT MODIFICATIONS ARE NOT TO BE MADE WITHOUT AUTHORITY FROM THE OFFICE OF SIGNAL DESIGN	Date: 08/21/12 Des: NST Chk: MWK AFE: 22820	UNION PACIFIC RAILROAD ELKHART, ILLINOIS OGLESBY STREET SPRINGFIELD SUBDIVISION Office of AVP Engineering - Signal Omaha, Nebraska	Sh.: 13A DOT 294267C MP: 167.26 ID: CSL16726.13AX

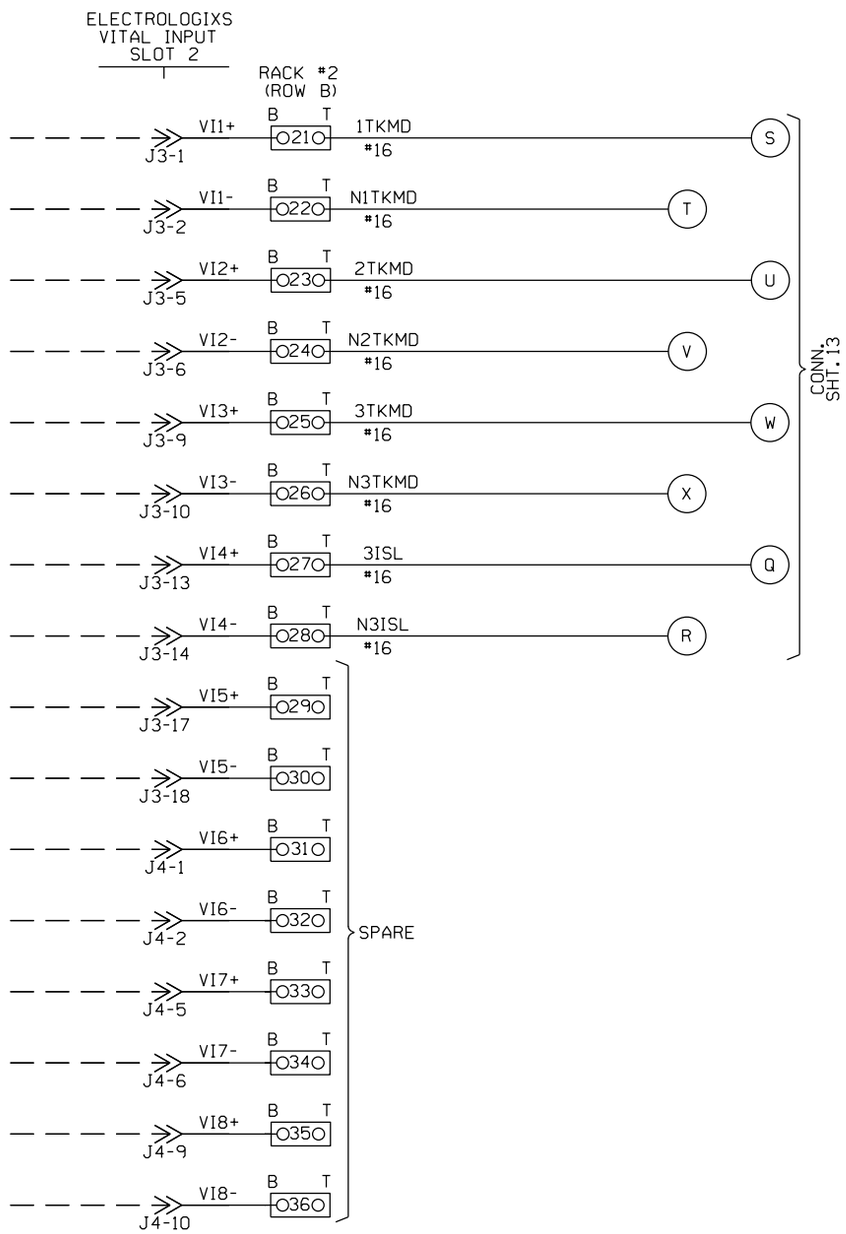

NOTES:

1. INPUT WIRES, OUTPUT WIRES, POWER WIRES, PUT IN SEPARATE BUNDLES.
2. ALL WIRES #16 UNLESS NOTED.
3. O?? O 2 POSITION WAGO BLOCK.

NEW SHEET

							Designed: 08/21/12 TIER 3 PHASE 3 M.P.177.00 TO M.P.160.00 UPGRADE XINGS AND CP'S FOR HIGH SPEED RAIL Rec#: WO#:22820 IS: / / / /NST/MJF	CIRCUIT MODIFICATIONS ARE NOT TO BE MADE WITHOUT AUTHORITY FROM THE OFFICE OF SIGNAL DESIGN	Date: 08/21/12 Des: NST Chk: AFE: 22820	UNION PACIFIC RAILROAD ELKHART, ILLINOIS OGLESBY STREET SPRINGFIELD SUBDIVISION Office of AVP Engineering - Signal Omaha, Nebraska	Sh.: 13B DOT 294267C MP: 167.26 ID: CSL16726.13BX

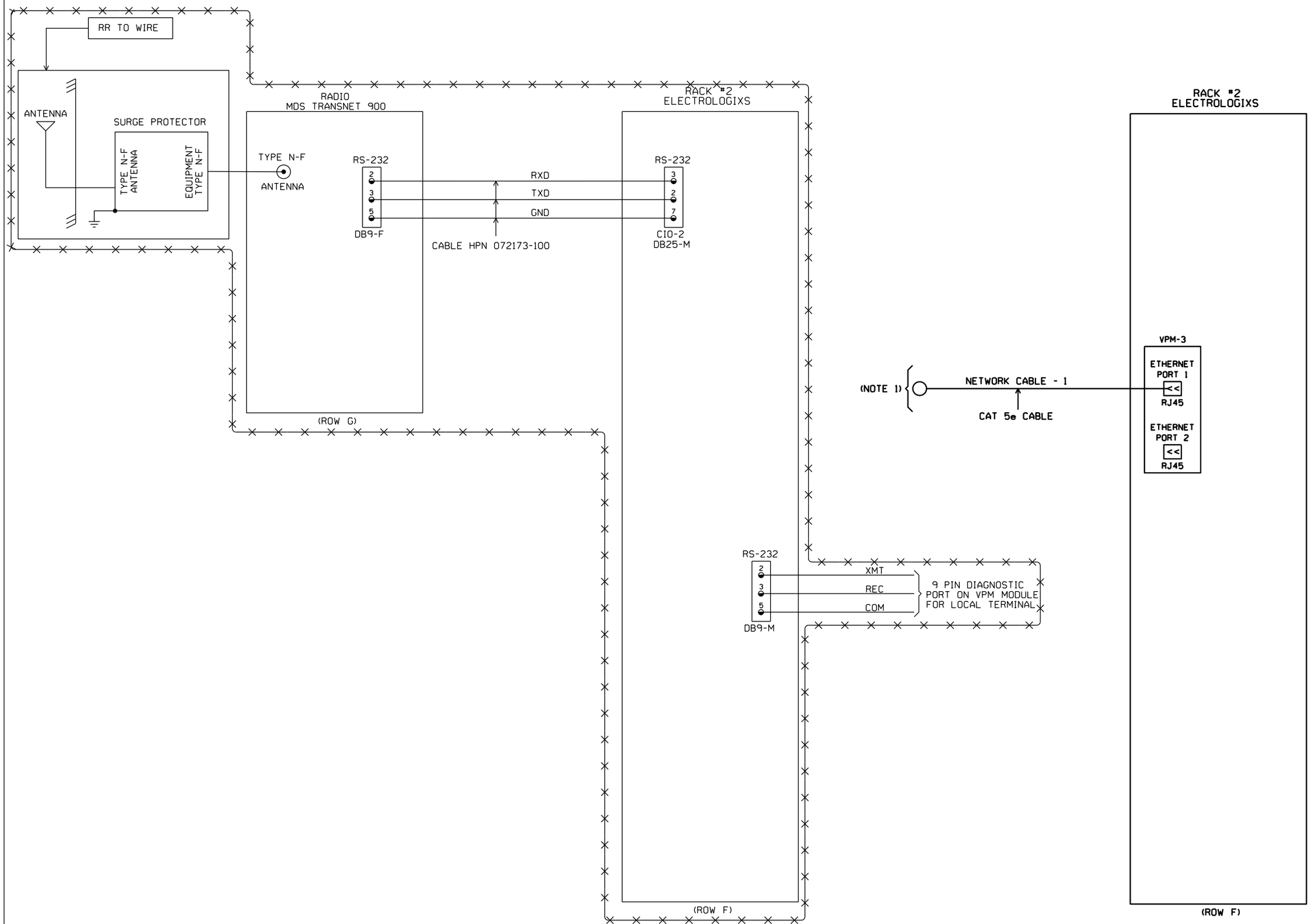

NOTES:
1. NETWORK SWITCH INSTALLED BY RR.

= IN
= OUT

NEW SHEET

						Designed: 08/21/12 TIER 3 PHASE 3 M.P.177.00 TO M.P.160.00 UPGRADE XINGS AND CP'S FOR HIGH SPEED RAIL Rec#: WO#:22820 IS: MWK/ / /NST/MJF	02-24-09 INSTALL MONITOR RACK FOR XINGS W.O. 87933 MAS	CIRCUIT MODIFICATIONS ARE NOT TO BE MADE WITHOUT AUTHORITY FROM THE OFFICE OF SIGNAL DESIGN	Date: 08/21/12 Des: NST Chk: MWK AFE: 22820	UNION PACIFIC RAILROAD ELKHART, ILLINOIS OGLESBY STREET SPRINGFIELD SUBDIVISION Office of AVP Engineering - Signal Omaha, Nebraska	Sh.: 13B 13C DOT 294267C MP: 167.26 ID: CSL16726 13BX

13CX

WIRING NOTE:
WIRE 30' LONG WIRES TO BSA-4

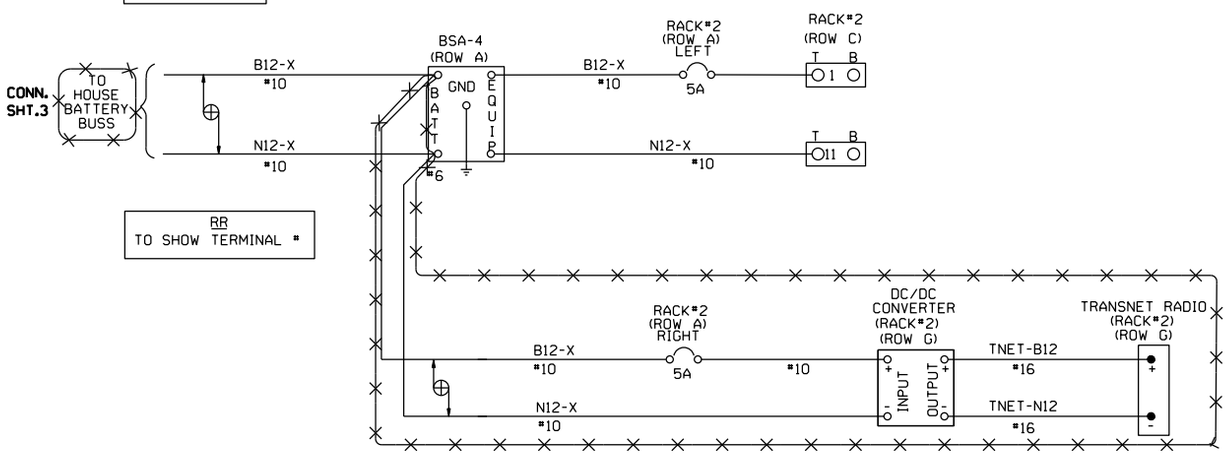

RR
TO SHOW TERMINAL #

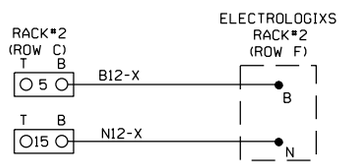

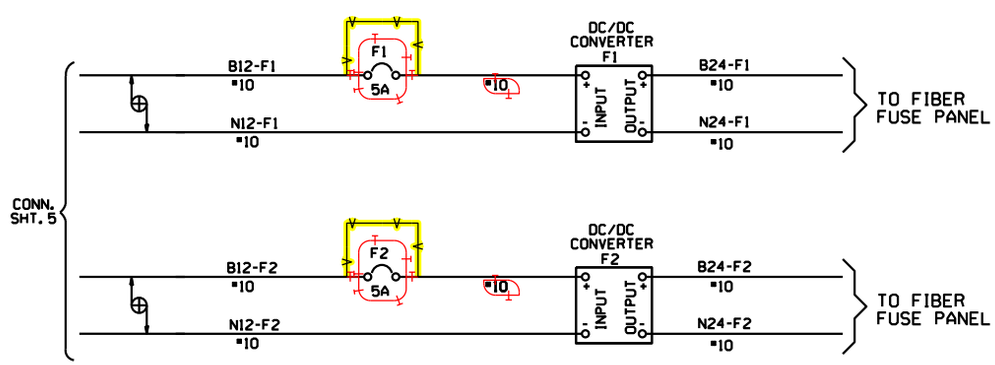

NOTES:

DENOTES TWISTED PAIR

O?? O 2 POSITION WAGO BLOCK

= IN
= OUT

= IN
= OUT

NEW SHEET

					Designed: 2/25/15 TIER 3 PHASE 3 M.P.177.00 TO M.P.160.00 HSR SCOPE CHANGE Rec#: IS: WO#:22820 MWK/ /NST/JYJ	Designed: 08/21/12 TIER 3 PHASE 3 M.P.177.00 TO M.P.160.00 UPGRADE XINGS AND CP'S FOR HIGH SPEED RAIL Rec#: IS: WO#:22820 MWK/ /NST/MJF	02-24-09 INSTALL MONITOR RACK FOR XINGS W.O. 87933 MAS	CIRCUIT MODIFICATIONS ARE NOT TO BE MADE WITHOUT AUTHORITY FROM THE OFFICE OF SIGNAL DESIGN	Date: 08/21/12 Des: NST Chk: MWK AFE: 22820	UNION PACIFIC RAILROAD ELKHART, ILLINOIS OGLESBY STREET SPRINGFIELD SUBDIVISION Office of AVP Engineering - Signal Omaha, Nebraska	Sh.: X130 130 DOT 294267C MP: 167.26 ID: CSL16726(13CX)X

13DX

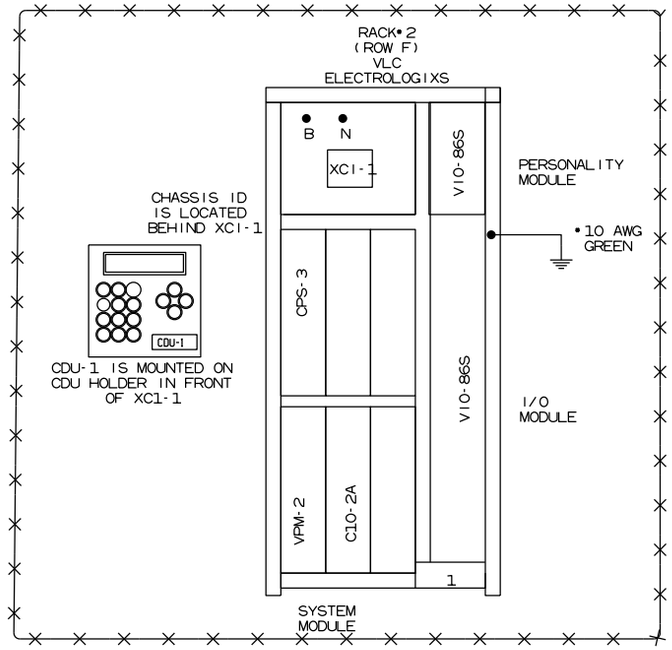

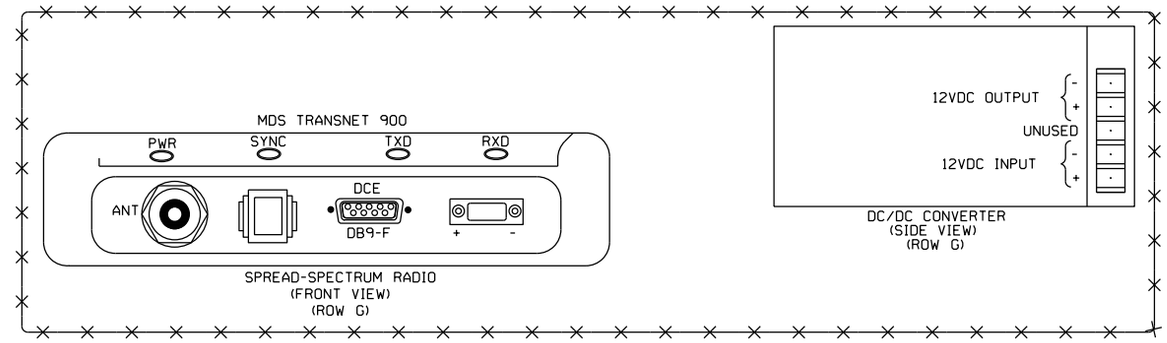

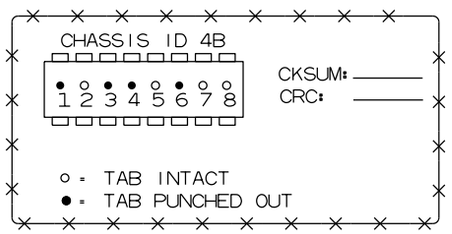

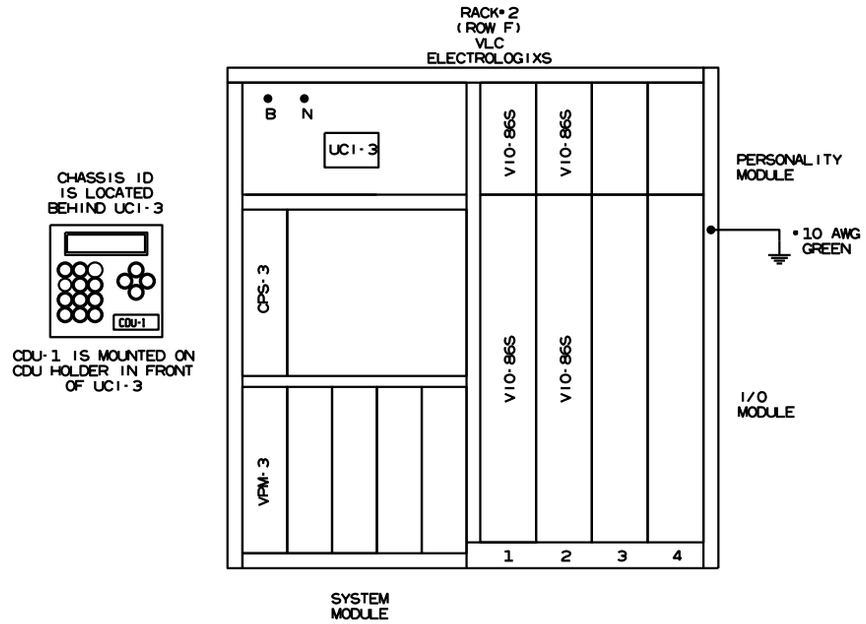

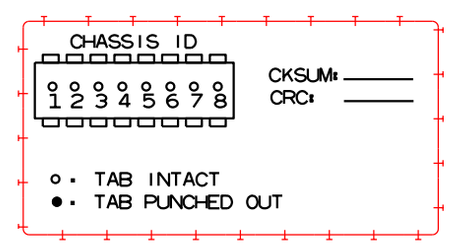

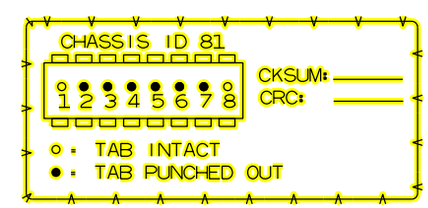

= IN
= OUT

= IN
= OUT

NEW SHEET

					Designed: 2/25/15 TIER 3 PHASE 3 M.P.177.00 TO M.P.160.00 HSR SCOPE CHANGE Rec#: IS: WO#:22820 MWK/ /NST/JYJ	Designed: 08/21/12 TIER 3 PHASE 3 M.P.177.00 TO M.P.160.00 UPGRADE XINGS AND CP'S FOR HIGH SPEED RAIL Rec#: IS: WO#:22820 MWK/ /NST/MJF	02-24-09 INSTALL MONITOR RACK FOR XINGS W.O. 87933 MAS	CIRCUIT MODIFICATIONS ARE NOT TO BE MADE WITHOUT AUTHORITY FROM THE OFFICE OF SIGNAL DESIGN	Date: 08/21/12 Des: NST Chk: MWK AFE: 22820	UNION PACIFIC RAILROAD ELKHART, ILLINOIS OGLESBY STREET SPRINGFIELD SUBDIVISION Office of AVP Engineering - Signal Omaha, Nebraska	Sh.: 13D 13E DOT 294267C MP: 167.26 ID: CSL16726 13DX

13EX

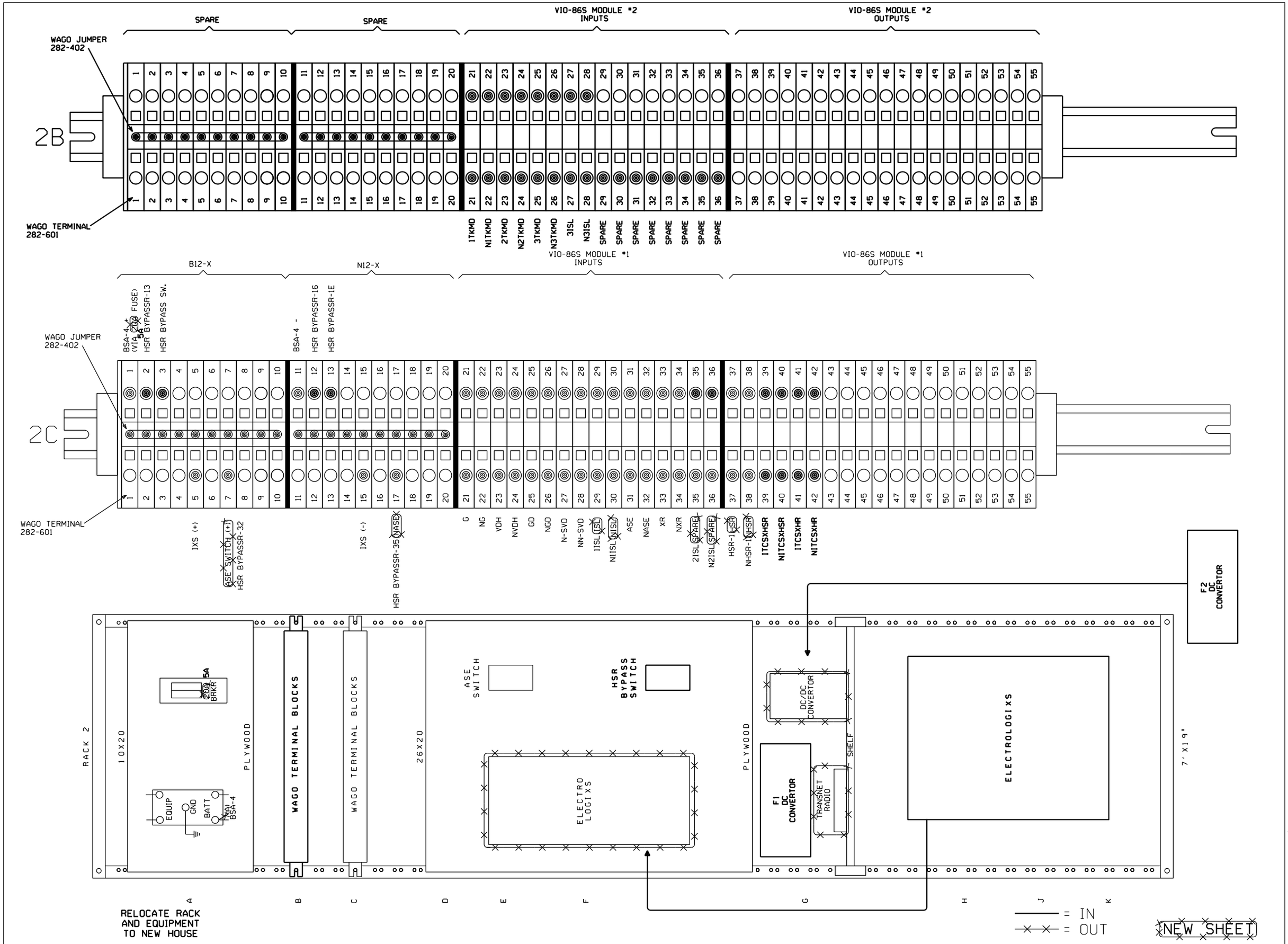

					Designed: 08/21/12 TIER 3 PHASE 3 M.P.177.00 TO M.P.160.00 UPGRADE XINGS AND CP'S FOR HIGH SPEED RAIL Rec": WO#:22820 IS: MWK/ /NST/MJF	02-24-09 INSTALL MONITOR RACK FOR XINGS W.O. 87933 MAS	CIRCUIT MODIFICATIONS ARE NOT TO BE MADE WITHOUT AUTHORITY FROM THE OFFICE OF SIGNAL DESIGN	Date: 08/21/12 Des: NST Chk: MWK AFE: 22820	UNION PACIFIC RAILROAD ELKHART, ILLINOIS OGLESBY STREET SPRINGFIELD SUBDIVISION Office of AVP Engineering - Signal Omaha, Nebraska	Sh.: 13E 13F DOT 294267C MP: 167.26 ID: CSL16726 13EX

13FX

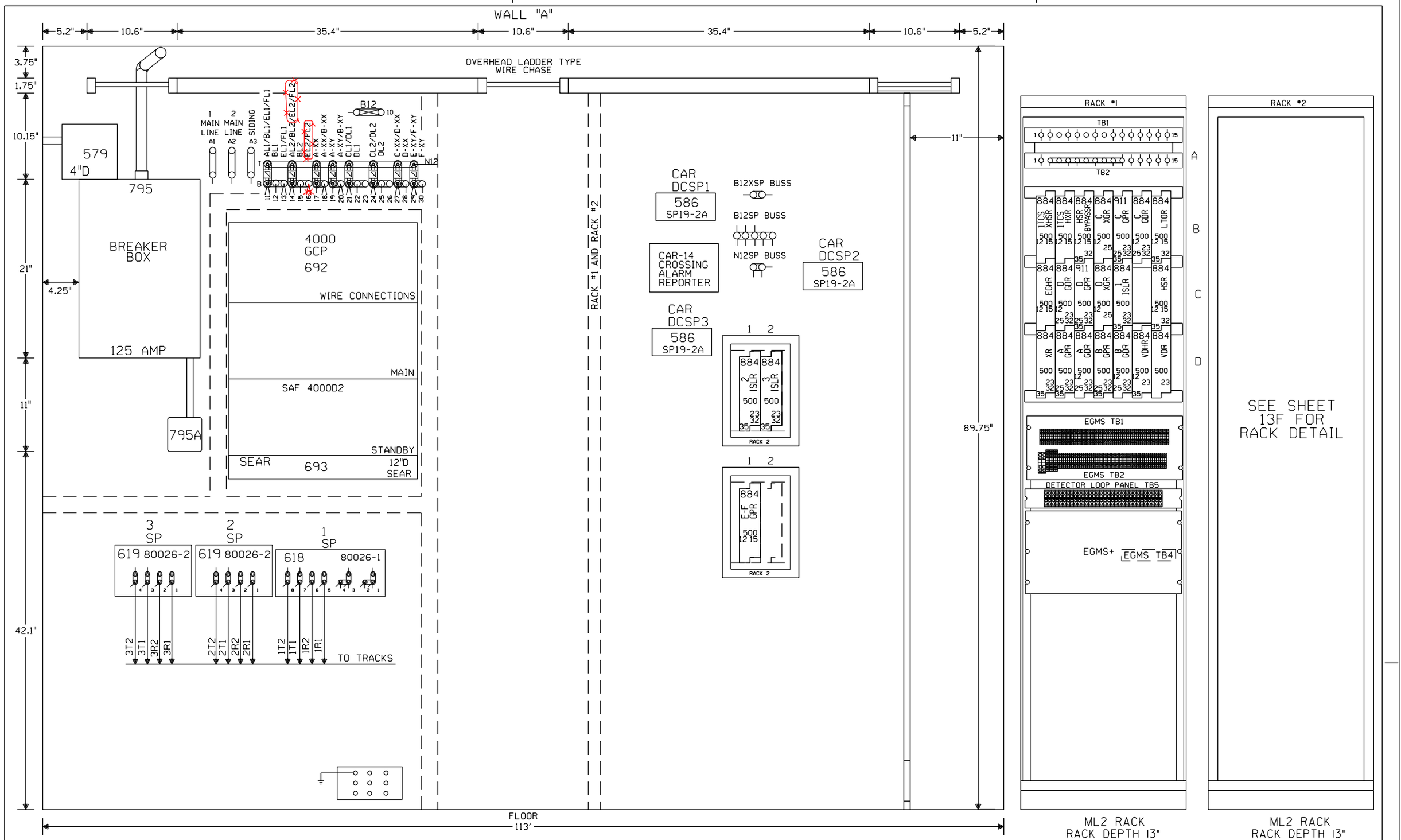

NOTE: RACK #1 & #2 ARE PERPENDICULAR TO "A" WALL

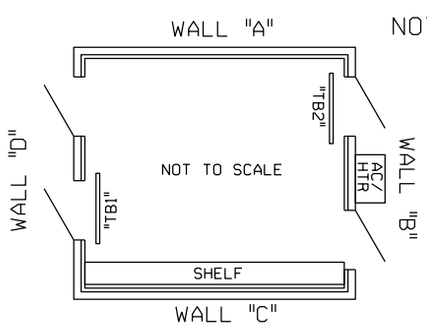

NOTE: ALL DIMENSIONS SHOWN ARE APPROXIMATE.

0 1 2 3 4 FEET

SCALE: 1.5 INCHES = 1 FOOT

= IN
= OUT

~~NEW SHEET~~

						Designed: 2/25/15 TIER 3 PHASE 3 M.P.177.00 TO M.P.160.00 HSR SCOPE CHANGE Rec#: WO#:22820 IS: MWK/ / /NST/JVJ	Designed: 08/21/12 TIER 3 PHASE 3 M.P.177.00 TO M.P.160.00 UPGRADE XINGS AND CP'S FOR HIGH SPEED RAIL Rec#: WO#:22820 IS: MWK/ / /NST/MJF	CIRCUIT MODIFICATIONS ARE NOT TO BE MADE WITHOUT AUTHORITY FROM THE OFFICE OF SIGNAL DESIGN	Date: 08/21/12 Des: NST Chk: MWK AFE: 22820	UNION PACIFIC RAILROAD ELKHART, ILLINOIS OGLESBY STREET SPRINGFIELD SUBDIVISION Office of AVP Engineering - Signal Omaha, Nebraska	Sh.: 14 DOT 294267C MP: 167.26 ID: CSL16726.14X

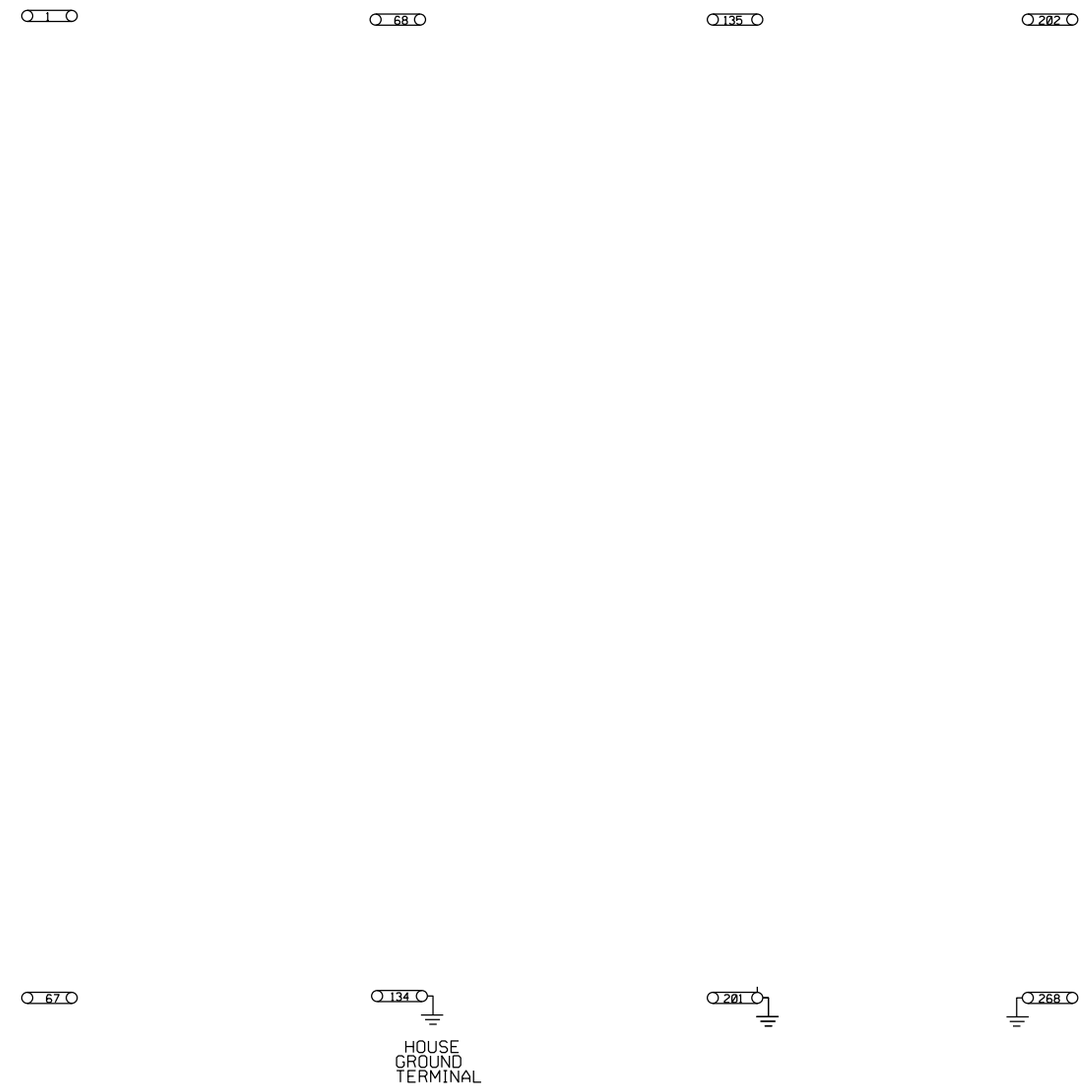

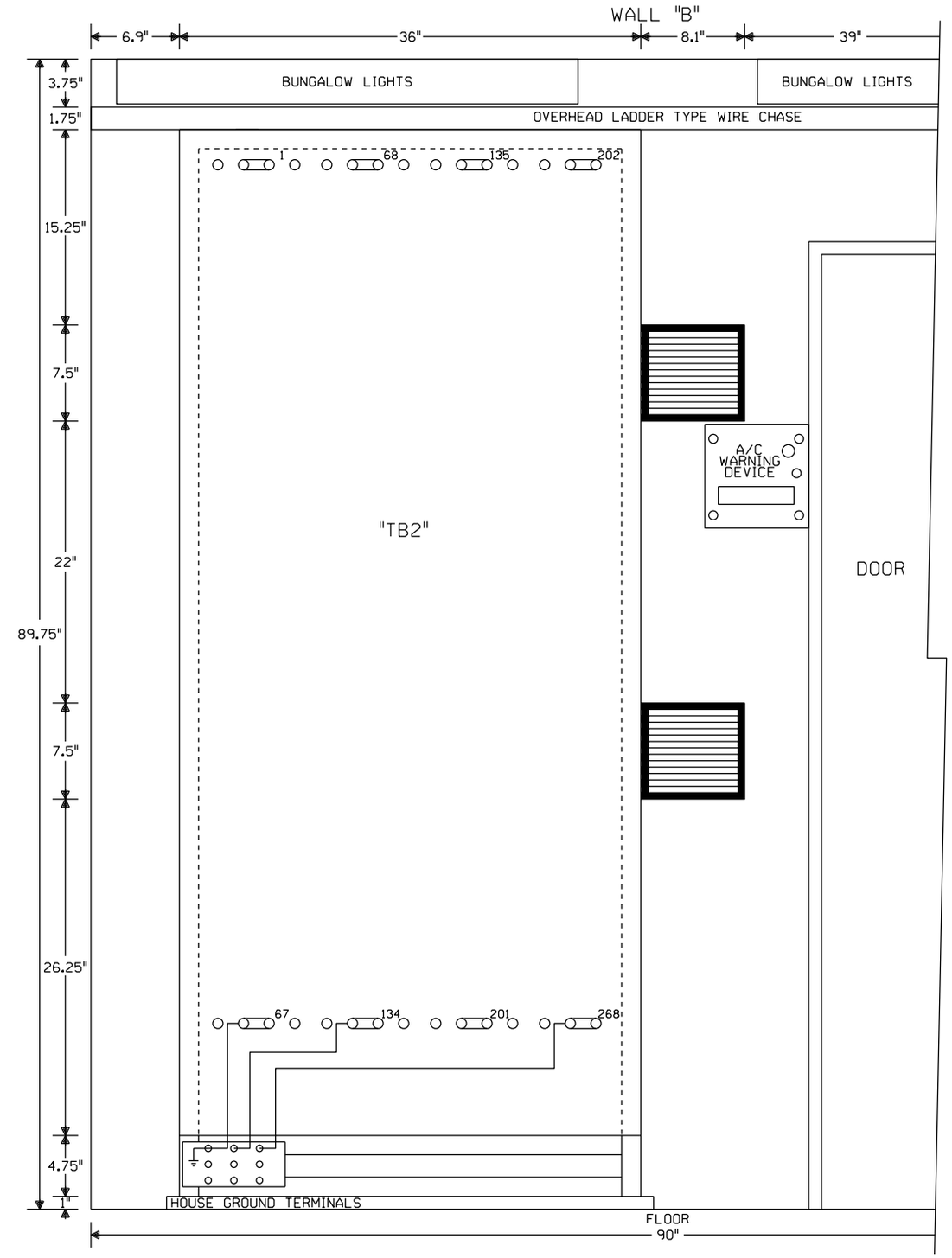

NOTE: ALL DIMENSIONS SHOWN ARE APPROXIMATE.

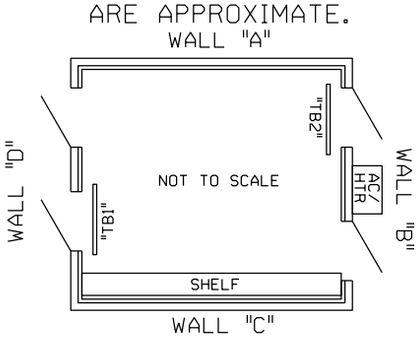

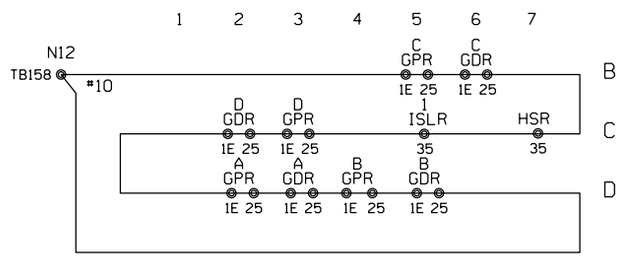

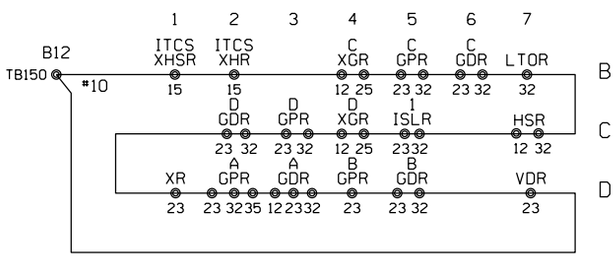

NEW SHEET

							Designed: 08/21/12 TIER 3 PHASE 3 M.P.177.00 TO M.P.160.00 UPGRADE XINGS AND CP'S FOR HIGH SPEED RAIL Rec#: WO#: 22820 IS: MWK/ / /NST/MJF	CIRCUIT MODIFICATIONS ARE NOT TO BE MADE WITHOUT AUTHORITY FROM THE OFFICE OF SIGNAL DESIGN	Date: 08/21/12 Des: NST Chk: MWK AFE: 22820	UNION PACIFIC RAILROAD ELKHART, ILLINOIS OGLESBY STREET SPRINGFIELD SUBDIVISION Office of AVP Engineering - Signal Omaha, Nebraska	Sh.: 15 DOT 294267C MP: 167.26 ID: CSL16726.15X

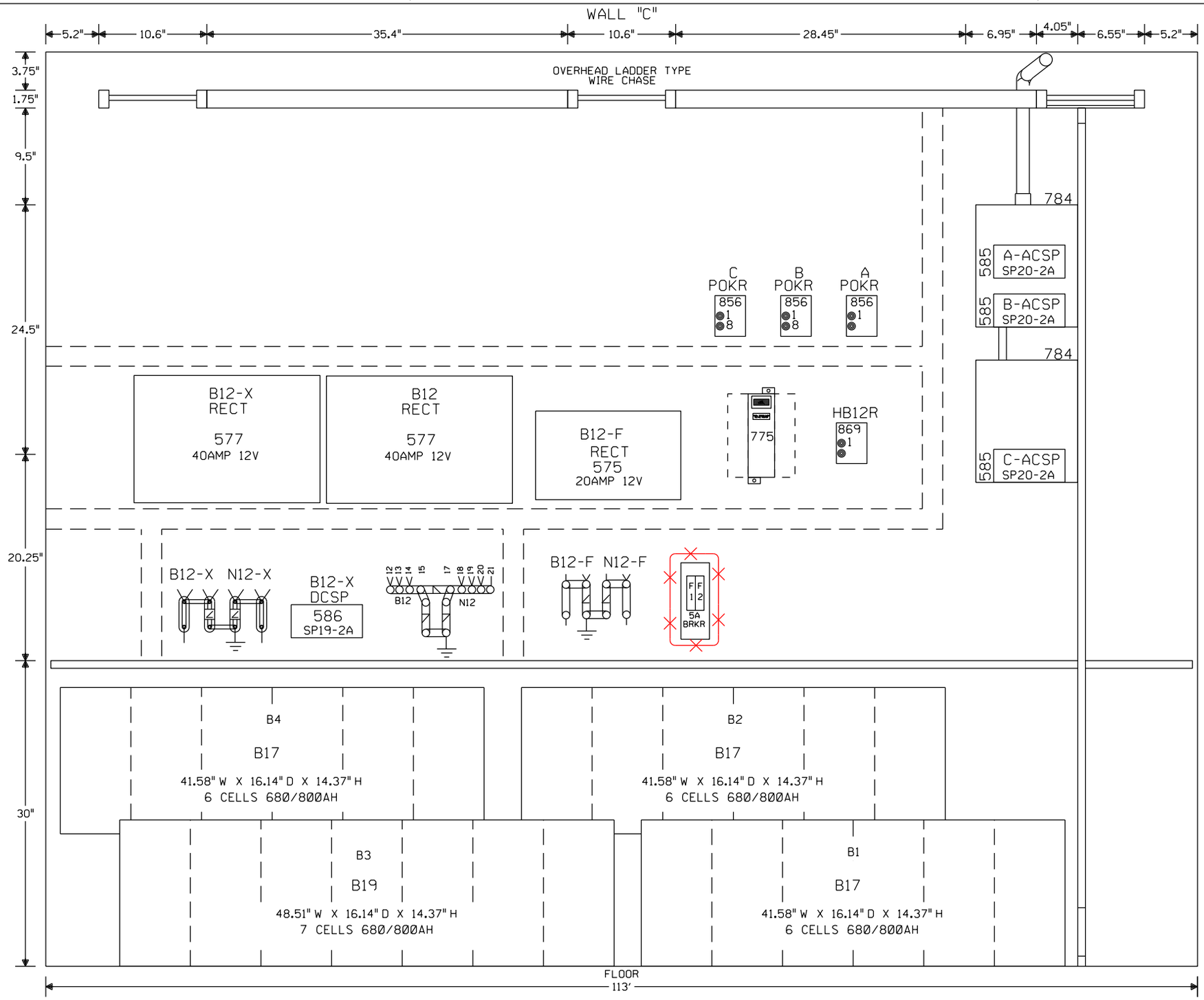

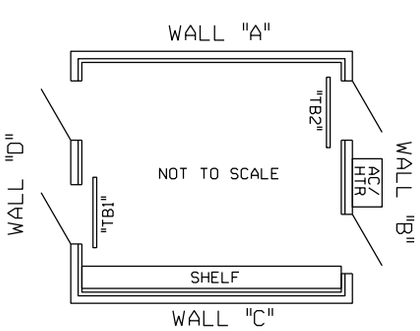

NOTE: ALL DIMENSIONS SHOWN
ARE APPROXIMATE.

0 1 2 3 4 FEET

SCALE: 1.5 INCHES = 1 FOOT

= IN
= OUT

NEW SHEET

						Designed: 2/25/15 TIER 3 PHASE 3 M.P.177.00 TO M.P.160.00 HSR SCOPE CHANGE Rec#: WO#:22820 IS: MWK/ / /NST/JVJ	Designed: 08/21/12 TIER 3 PHASE 3 M.P.177.00 TO M.P.160.00 UPGRADE XINGS AND CP'S FOR HIGH SPEED RAIL Rec#: WO#:22820 IS: MWK/ / /NST/MJF	CIRCUIT MODIFICATIONS ARE NOT TO BE MADE WITHOUT AUTHORITY FROM THE OFFICE OF SIGNAL DESIGN	Date: 08/21/12 Des: NST Chk: MWK AFE: 22820	UNION PACIFIC RAILROAD ELKHART, ILLINOIS OGLESBY STREET SPRINGFIELD SUBDIVISION Office of AVP Engineering - Signal Omaha, Nebraska	Sh.: 16 DOT 294267C MP: 167.26 ID: CSL16726.16X

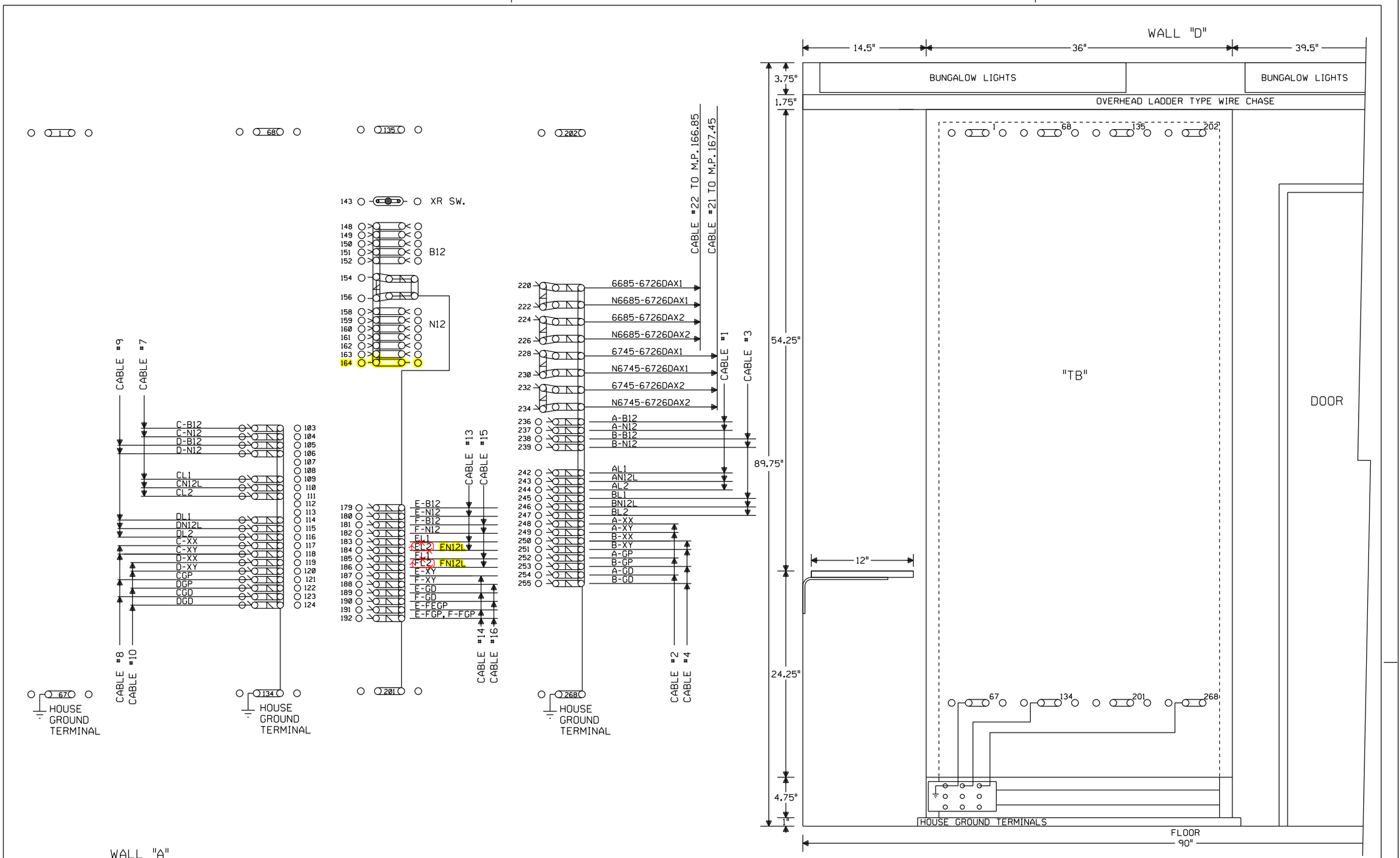

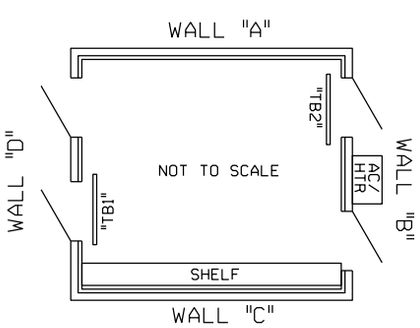

NOTE: ALL DIMENSIONS SHOWN ARE APPROXIMATE.

0 1 2 3 4 FEET

SCALE: 1.5 INCHES = 1 FOOT

= IN
= OUT

~~NEW SHEET~~

						Designed: 2/25/15 TIER 3 PHASE 3 M.P.177.00 TO M.P.160.00 HSR SCOPE CHANGE Rec*: WO*:22820 IS: MWK/ / /NST/JVJ	Designed: 08/21/12 TIER 3 PHASE 3 M.P.177.00 TO M.P.160.00 UPGRADE XINGS AND CP'S FOR HIGH SPEED RAIL Rec*: WO*:22820 IS: MWK/ / /NST/MJF	CIRCUIT MODIFICATIONS ARE NOT TO BE MADE WITHOUT AUTHORITY FROM THE OFFICE OF SIGNAL DESIGN	Date: 08/21/12 Des: NST Chk: MWK AFE: 22820	UNION PACIFIC RAILROAD ELKHART, ILLINOIS OGLESBY STREET SPRINGFIELD SUBDIVISION Office of AVP Engineering - Signal Omaha, Nebraska	Sh.: 17 DOT 294267C MP: 167.26 ID: CSL16726.17X