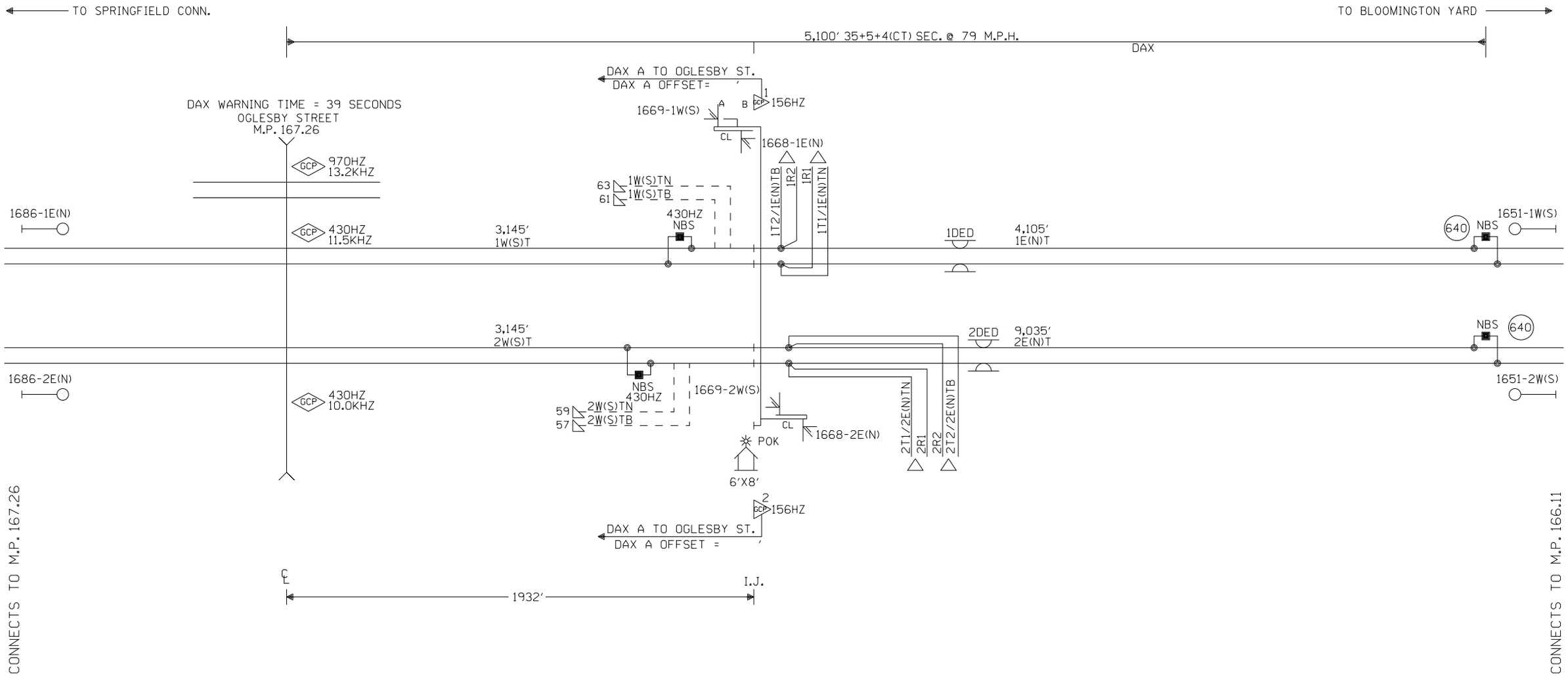

NOTES:

⊗ = TWISTED WIRES
ALL TRACK WIRES 2C. #6
INSULATED 1 TWIST PER FT.

TRANSMITTER AND RECEIVER LEADS
TO BE SEPARATED BY AT LEAST 12" IN TRENCH.
LENGTHS SHOULD NOT EXCEED MANUFACTURES
RECOMMENDATION.

ALL BUNGALOW WIRING TO BE #16 AWG FLEX
UNLESS OTHERWISE SPECIFIED EXCEPT ALL GROUND
WIRE TO BE #6 AWG FLEX OR LARGER.

REFER TO UP STANDARD DWG. FOR BUNGALOW
GROUNDING.

PORTABLE GENERATOR EXTENSION CORD
FOR 240V TO 240V IS PROVIDED AS WELL
AS A 120V TO 240V ADAPTER.

△ = ENSURE TRACK POLARITY IS
TRANSPOSED ACROSS ALL
INSULATED JOINTS.

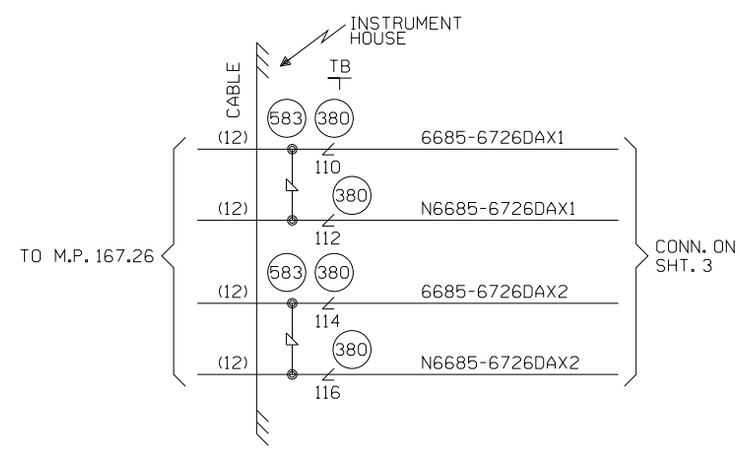

W(S) ◄——○——► E(N)

CABLE TABULATION

CABLE #12 7C#14 U.G.B.T. HOUSE TO MP. 167.26

NEW SHEET

					Designed: 08/21/12 TIER 3 PHASE 3 M.P.177.00 TO M.P.160.00 UPGRADE XINGS AND CP'S FOR HIGH SPEED RAIL Rec': WO': 22820 IS: /MWK / /NST/MJF	MODIFICATION LEVEL		CIRCUIT MODIFICATIONS ARE NOT TO BE MADE WITHOUT AUTHORITY FROM THE OFFICE OF SIGNAL DESIGN	Date: 08/21/12	UNION PACIFIC RAILROAD	Sh.: 1
						Q. A. LAST LEVEL CHECKED	DU		Des: NST		
						LAST LEVEL MOD THIS TYPICAL	DU		Chk: MWK	TWO TRACK INTERMEDIATE SPRINGFIELD SUBDIVISION	MP: 166.85
						LAST LEVEL BY DESIGNER	DU		AFE: 22820	Office of AVP Engineering - Signal Omaha, Nebraska	ID: CSL16685.1S
						CHANGED FROM TYPICAL? REV 01.24.11 4K REMOTE.1	Y				

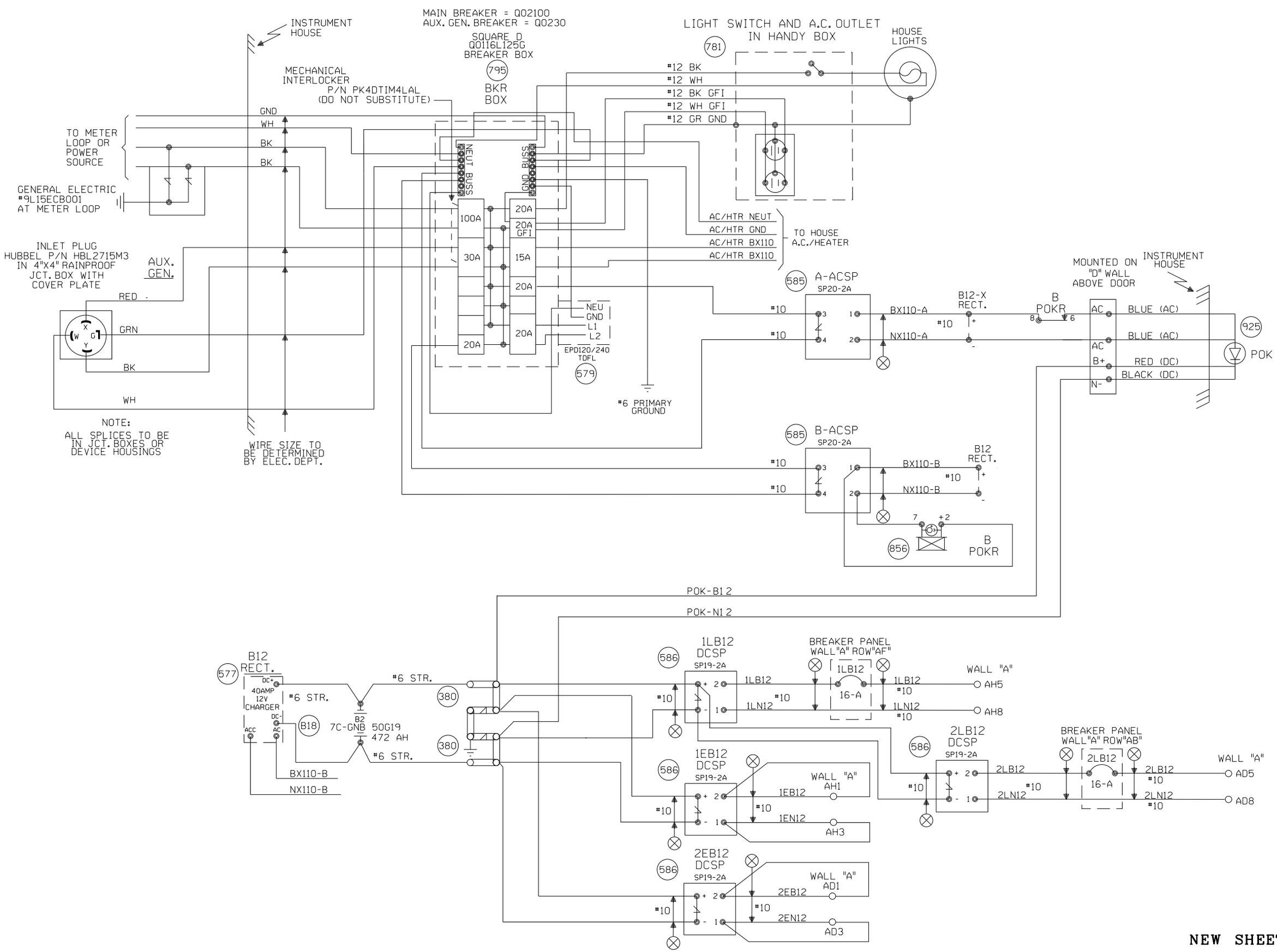

NEW SHEET

Designed: 08/21/12 TIER 3 PHASE 3 M.P.177.00 TO M.P.160.00 UPGRADE XINGS AND CP'S FOR HIGH SPEED RAIL Rec#: WO#: 22820 IS: MWK / NST/MJF	MODIFICATION LEVEL		CIRCUIT MODIFICATIONS ARE NOT TO BE MADE WITHOUT AUTHORITY FROM THE OFFICE OF SIGNAL DESIGN	Date: 08/21/12	UNION PACIFIC RAILROAD	Sh.: 2
	Q.A. LAST LEVEL CHECKED	DU		Des: NST	TWO TRACK INTERMEDIATE SPRINGFIELD SUBDIVISION	
	LAST LEVEL MOD THIS TYPICAL	DU		Chk: MWK		MP: 166.85
	LAST LEVEL BY DESIGNER	DU		AFE: 22820	Office of AVP Engineering - Signal Omaha, Nebraska	ID: CSL16685.2S
	CHANGED FROM TYPICAL? REV 01.24.11 4K SEARAC.2	Y				

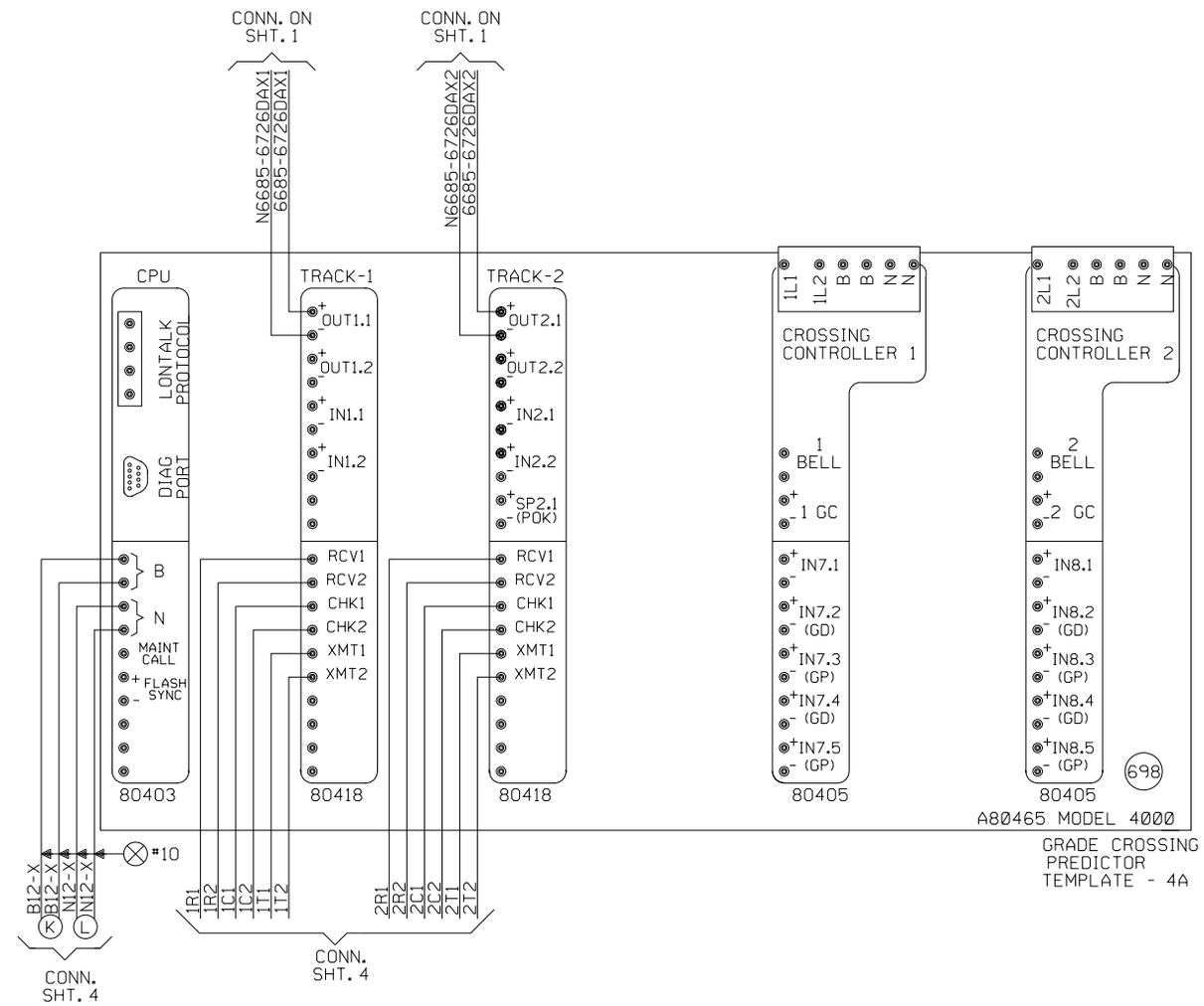

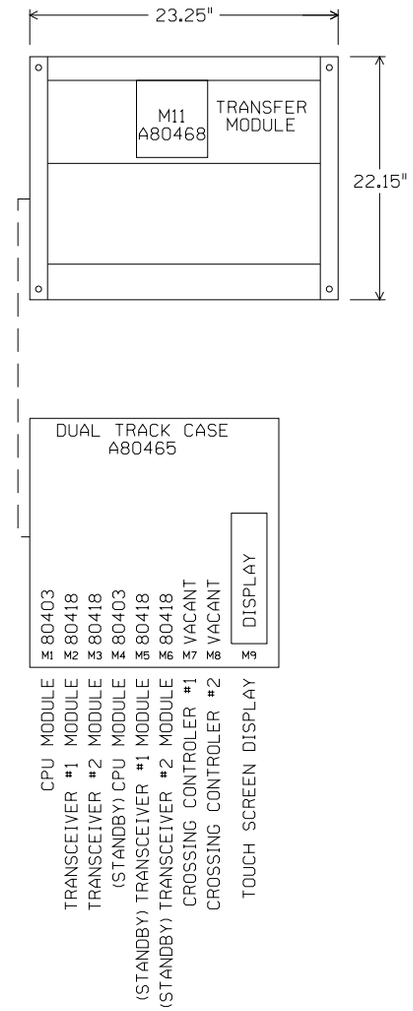

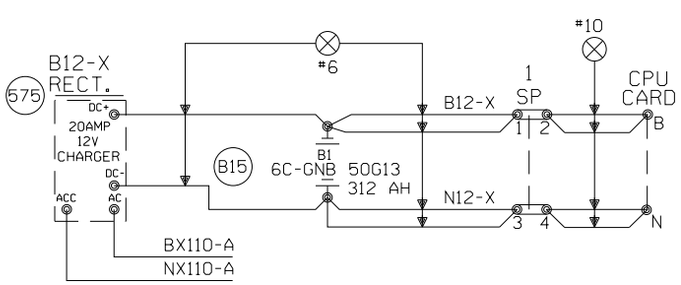

"Mf" FREQUENCY (HZ)	MAXIMUM TRANSMIT WIRE LENGTH (FEET)
86	100
114	125
156	150
211	200
285-970	250

NOTE:
EACH TRANSMITTER TO RAIL WIRE FROM XMT1 AND XMT2 MUST NOT EXCEED THE MAXIMUM LENGTH SPECIFIED IN THE TABLE SHOWN. THE RECEIVER WIRE LENGTH IS NOT CRITICAL. DOES NOT APPLY TO 6 TRACK WIRE APPLICATION.

NEW SHEET

Designed: 08/21/12
TIER 3 PHASE 3
M.P.177.00 TO M.P.160.00
UPGRADE XINGS AND CP'S FOR HIGH SPEED RAIL
Rec': WO': 22820
IS: /MWK / /NST/MJF

MODIFICATION LEVEL	
O. A. LAST LEVEL CHECKED	DU
LAST LEVEL MOD THIS TYPICAL	DU
LAST LEVEL BY DESIGNER	DU
CHANGED FROM TYPICAL?	Y
REV 01.24.11 4K 2TKGF.3	

CIRCUIT MODIFICATIONS ARE NOT TO BE MADE WITHOUT AUTHORITY FROM THE OFFICE OF SIGNAL DESIGN

Date: 08/21/12
Des: NST
Chk: MWK
AFE: 22820

UNION PACIFIC RAILROAD

TWO TRACK INTERMEDIATE
SPRINGFIELD SUBDIVISION

Office of AVP Engineering - Signal Omaha, Nebraska

Sh.: 3
MP: 166.85
ID: CSL16685.3X

Minimum Program Steps Report

Location and SIN

DOT Number: 000000R
Milepost Number: 166.85
Site Name: ELKHART, IL

SIN: 762010010016 *

* Parameter is part of office check number calculation.

MCF and Template Selection

MCF Name: GCP-T6X-02-4.mcf
MCF Revision: 24
MCFCRC: 09FC363B

Template = 4A:6 Remotes (OCCN) *

* Parameter is part of office check number calculation.

Minimum Program Steps

TEMPLATE: module configuration
Track 2/RIO 1 Slot = Track (OCCN) *

TEMPLATE: track 1-Remote Dax
Track 1 : GCP Frequency = 156 Hz (Field,TCN)
Track 1 : Approach Distance = 3235 ft (Set in Field,TCN)
Track 1 : Dax A Warning Time = 39 sec (OCCN) *
Track 1 : Dax A Offset Distance = 1864 ft (Set in Field)
Track 1 : GCP Transmit Level = Medium (Set in Field,TCN)

TEMPLATE: track 2-Remote Dax
Track 2 : GCP Frequency = 156 Hz (Field,TCN)
Track 2 : Approach Distance = 3235 ft (Set in Field,TCN)
Track 2 : Dax A Warning Time = 39 sec (OCCN) *
Track 2 : Dax A Offset Distance = 1864 ft (Set in Field)
Track 2 : GCP Transmit Level = Medium (Set in Field,TCN)

TEMPLATE: OOS
OOS Timeout = 1 hrs (Set in Field)

TEMPLATE: OP assignment 1
OUT 1.1 = T1 Dax A (OCCN) *
OUT 1.2 = T2 Dax A (OCCN) *

ADVANCED: site options
Daylight Savings = Off (Set in Field)

* Parameter is part of office check number calculation.

Check Numbers

Office Check Number: 2F01142A
Config. Check Number: 070FBF23
(Based on MCF Revision 24)

Parameters not part of office check number calculation:

Track 1 : GCP Frequency = 156 Hz
Track 1 : Approach Distance = 3235 ft (Set in Field)
Track 1 : Dax A Offset Distance = 1864 ft (Set in Field)
Track 1 : GCP Transmit Level = Medium (Set in Field)
Track 2 : GCP Frequency = 156 Hz
Track 2 : Approach Distance = 3235 ft (Set in Field)
Track 2 : Dax A Offset Distance = 1864 ft (Set in Field)
Track 2 : GCP Transmit Level = Medium (Set in Field)
OOS Timeout = 1 hrs (Set in Field)
Daylight Savings = Off (Set in Field)

Comments

<none>

Configuration Package File

Filename: CSL16685_000000R.pac
Path: H:\UP\Springfield Sub Tier 3 Ph. 3 11-404-3\PAC Files\166.85\
Date/Time: 7/17/2013 20:03:51

NEW SHEET

Designed: 08/21/12
TIER 3 PHASE 3
M.P.177.00 TO
M.P.160.00
UPGRADE XINGS AND
CP'S FOR HIGH
SPEED RAIL
Rec'd: WO#:22820
IS: /MWK
/ /NST/MJF

NOTE: Actual OFFSET and ISLAND distances must be verified by field personnel.

CIRCUIT MODIFICATIONS ARE NOT TO BE MADE WITHOUT AUTHORITY FROM THE OFFICE OF SIGNAL DESIGN

Date: 08/21/12
Des: NST
Chk: MWK
AFE: 22820

UNION PACIFIC RAILROAD

TWO TRACK INTERMEDIATE
SPRINGFIELD SUBDIVISION

Office of AVP Engineering - Signal Omaha, Nebraska

Sh.: 3A
MP: 166.85
ID: CSL16685.3AX

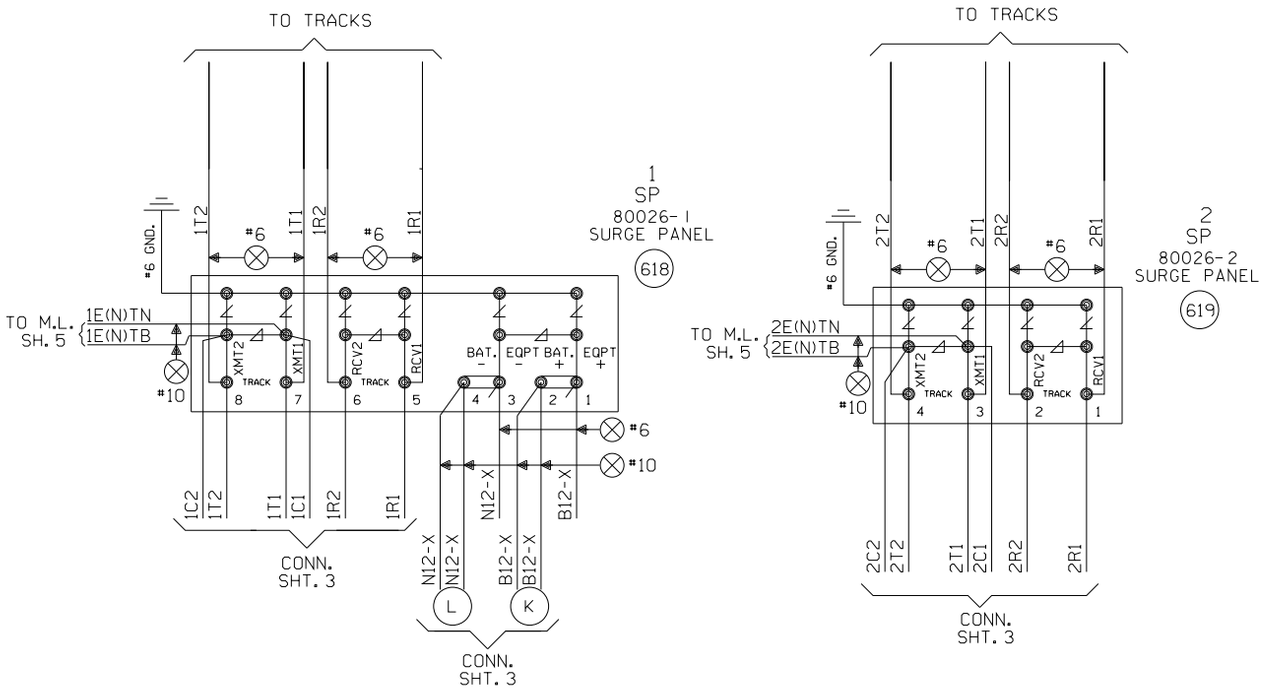

NEW SHEET

					Designed: 08/21/12 TIER 3 PHASE 3 M.P.177.00 TO M.P.160.00 UPGRADE XINGS AND CP'S FOR HIGH SPEED RAIL Rec": WO": 22820 IS: /MWK / /NST/MJF	MODIFICATION LEVEL		CIRCUIT MODIFICATIONS ARE NOT TO BE MADE WITHOUT AUTHORITY FROM THE OFFICE OF SIGNAL DESIGN	Date: 08/21/12	UNION PACIFIC RAILROAD	Sh.: 4
						Q. A. LAST LEVEL CHECKED	DU		Des: NST		
						LAST LEVEL MOD THIS TYPICAL	DU		Chk: MWK	TWO TRACK INTERMEDIATE SPRINGFIELD SUBDIVISION	MP: 166.85
						LAST LEVEL BY DESIGNER	DU		AFE: 22820		ID: CSL16685.4X
						CHANGED FROM TYPICAL?	Y			Office of AVP Engineering - Signal Omaha, Nebraska	
						REV 01.24.11 4K REMOTE.4					

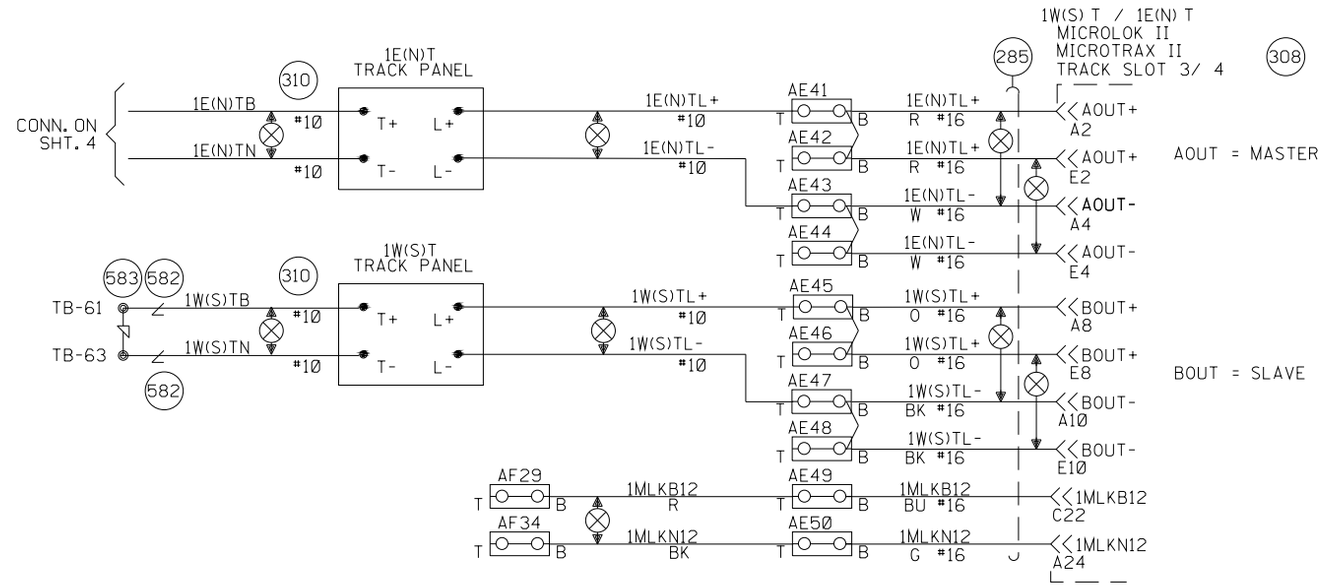

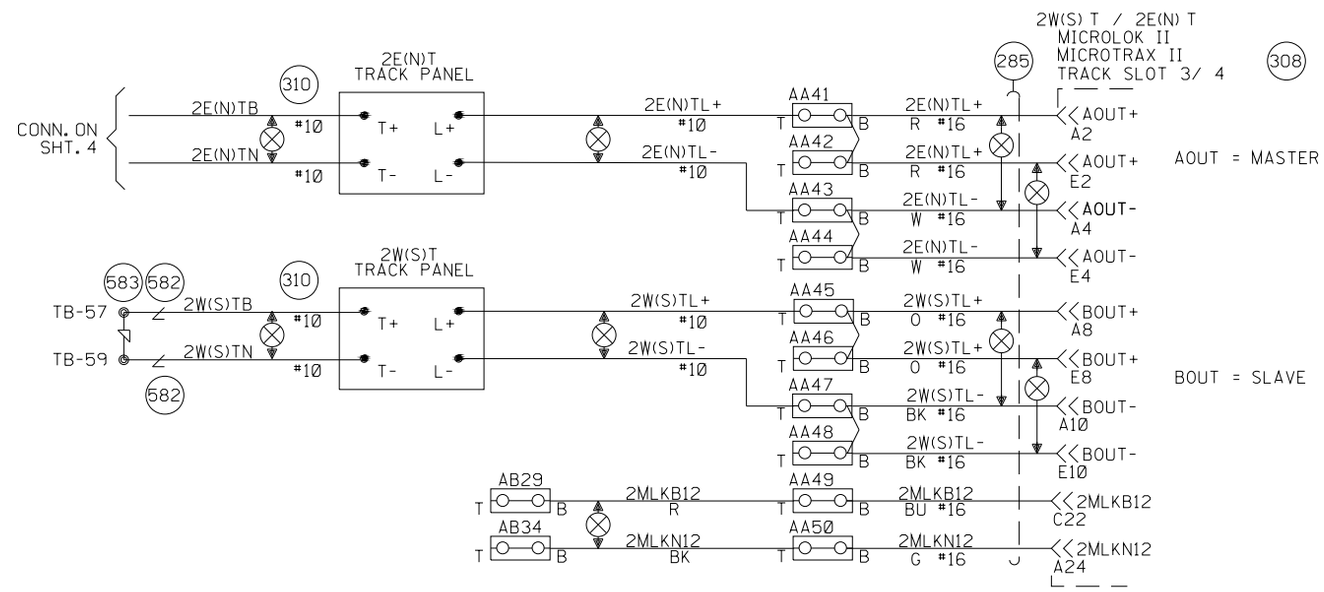

NOTES:

⊗ = TWISTED WIRES

⊘ = OBSERVE CORRECT POLARITY. EQUIPMENT WILL BE DAMAGED IF CONNECTIONS ARE REVERSED

ALL WIRING TO TRACK 2C. NO.6 U.G.B.T. CABLE UNLESS OTHERWISE SPECIFIED.

ALL CASE WIRING TO BE NO.16 UNLESS OTHERWISE SPECIFIED.

ALL GROUND CONNECTIONS TO BE #6 OR LARGER, SIGNAL WIRING SHOP TO RUN ALL GROUND CONNECTIONS.

ENSURE TRACK POLARITY IS TRANSPOSED ACROSS ALL INSULATED JOINTS.

⧖ = TEST TERMINALS MUST BE INSTALLED ON ALL WIRING CONNECTED TO EXTERNAL CABLES (EXCEPT TRACK AND A.C. POWER WIRES).

SHOW ACTUAL DED INSTALLED LOCATION ON DRAWING.

PORTABLE GENERATOR EXTENSION CORD FOR 240V TO 240V IS PROVIDED AS WELL AS A 120V TO 240V ADAPTER.

GELCORE LEDS TO BE USED.

NEW SHEET

Designed: 08/21/12
TIER 3 PHASE 3
M.P.177.00 TO
M.P.160.00
UPGRADE XINGS AND
CP'S FOR HIGH
SPEED RAIL
Rec#: WO#:22820
IS: /MWK
/ /NST/MJF

MODIFICATION LEVEL	
Q. A. LAST LEVEL CHECKED	DU
LAST LEVEL MOD THIS TYPICAL	DU
LAST LEVEL BY DESIGNER	DU
CHANGED FROM TYPICAL?	Y

REV 8/20/10 ITMLHBINTU.1

CIRCUIT MODIFICATIONS ARE NOT TO BE MADE WITHOUT AUTHORITY FROM THE OFFICE OF SIGNAL DESIGN

Date: 08/21/12
Des: NST
Chk: MWK
AFE: 22820

UNION PACIFIC RAILROAD

TWO TRACK INTERMEDIATE
SPRINGFIELD SUBDIVISION

Office of AVP Engineering - Signal — Omaha, Nebraska

Sh.: 5
MP: 166.85
ID: CSL16685.5S

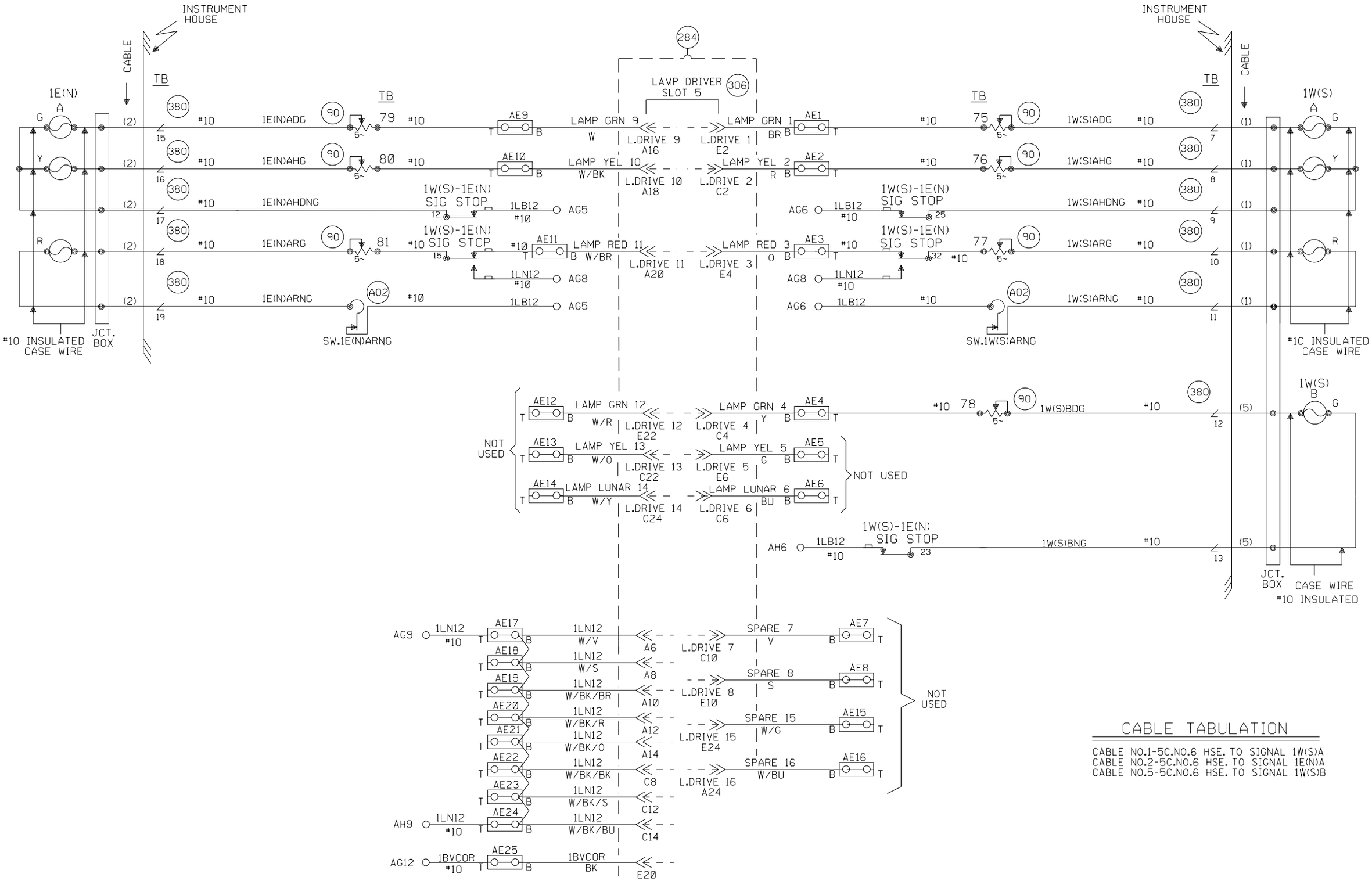

CABLE TABULATION

CABLE NO.1-5C.NO.6 HSE. TO SIGNAL 1W(S)A
CABLE NO.2-5C.NO.6 HSE. TO SIGNAL 1E(N)A
CABLE NO.5-5C.NO.6 HSE. TO SIGNAL 1W(S)B

NEW SHEET

Designed: 08/21/12
TIER 3 PHASE 3
M.P.177.00 TO
M.P.160.00
UPGRADE XINGS AND
CP'S FOR HIGH
SPEED RAIL
Rec#: WO#: 22820
IS: /MWK
/ /NST/MJF

MODIFICATION LEVEL	
O. A. LAST LEVEL CHECKED	DU
LAST LEVEL MOD THIS TYPICAL	DU
LAST LEVEL BY DESIGNER	DU
CHANGED FROM TYPICAL?	Y
REV 8/20/10 1TMLHBINTUGS.3	

CIRCUIT MODIFICATIONS ARE NOT TO BE MADE WITHOUT AUTHORITY FROM THE OFFICE OF SIGNAL DESIGN

Date: 08/21/12
Des: NST
Chk: MWK
AFE: 22820

UNION PACIFIC RAILROAD

TWO TRACK INTERMEDIATE
SPRINGFIELD SUBDIVISION

Office of AVP Engineering - Signal Omaha, Nebraska

Sh.: 6
MP: 166.85
ID: CSL16685.6S

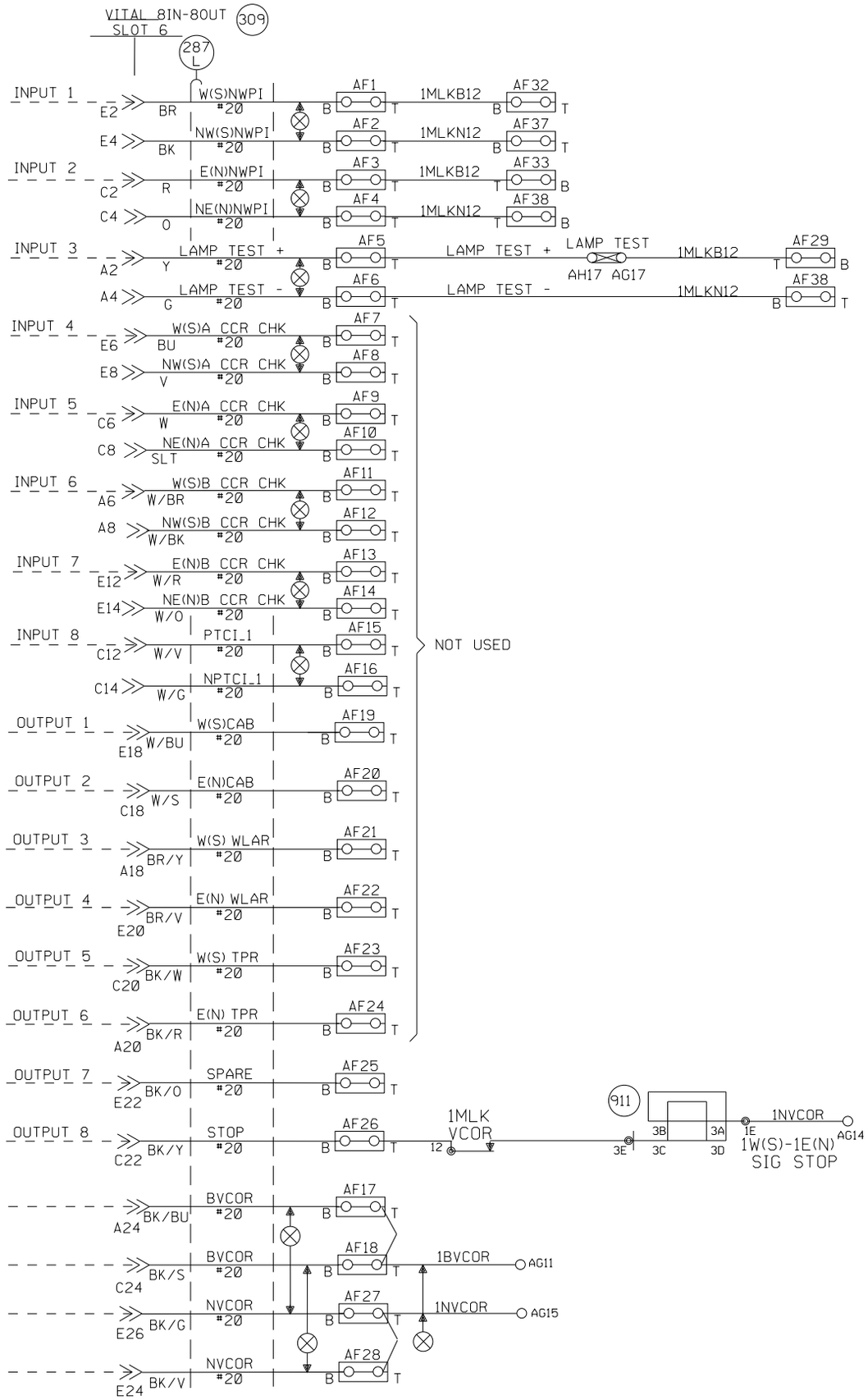

NEW SHEET

Designed: 08/21/12 TIER 3 PHASE 3 M.P.177.00 TO M.P.160.00 UPGRADE XINGS AND CP'S FOR HIGH SPEED RAIL Rec#: WO#:22820 IS: /MWK / /NST/MJF	MODIFICATION LEVEL		CIRCUIT MODIFICATIONS ARE NOT TO BE MADE WITHOUT AUTHORITY FROM THE OFFICE OF SIGNAL DESIGN	Date: 08/21/12 Des: NST Chk: MWK AFE: 22820	UNION PACIFIC RAILROAD TWO TRACK INTERMEDIATE SPRINGFIELD SUBDIVISION Office of AVP Engineering - Signal Omaha, Nebraska	Sh.: 6A MP: 166.85 ID: CSL16685.6AS
	Q.A. LAST LEVEL CHECKED	DU				
	LAST LEVEL MOD THIS TYPICAL	DU				
	LAST LEVEL BY DESIGNER	DU				
	CHANGED FROM TYPICAL? REV 8/20/10 1TMLHBINTU.3A	Y				

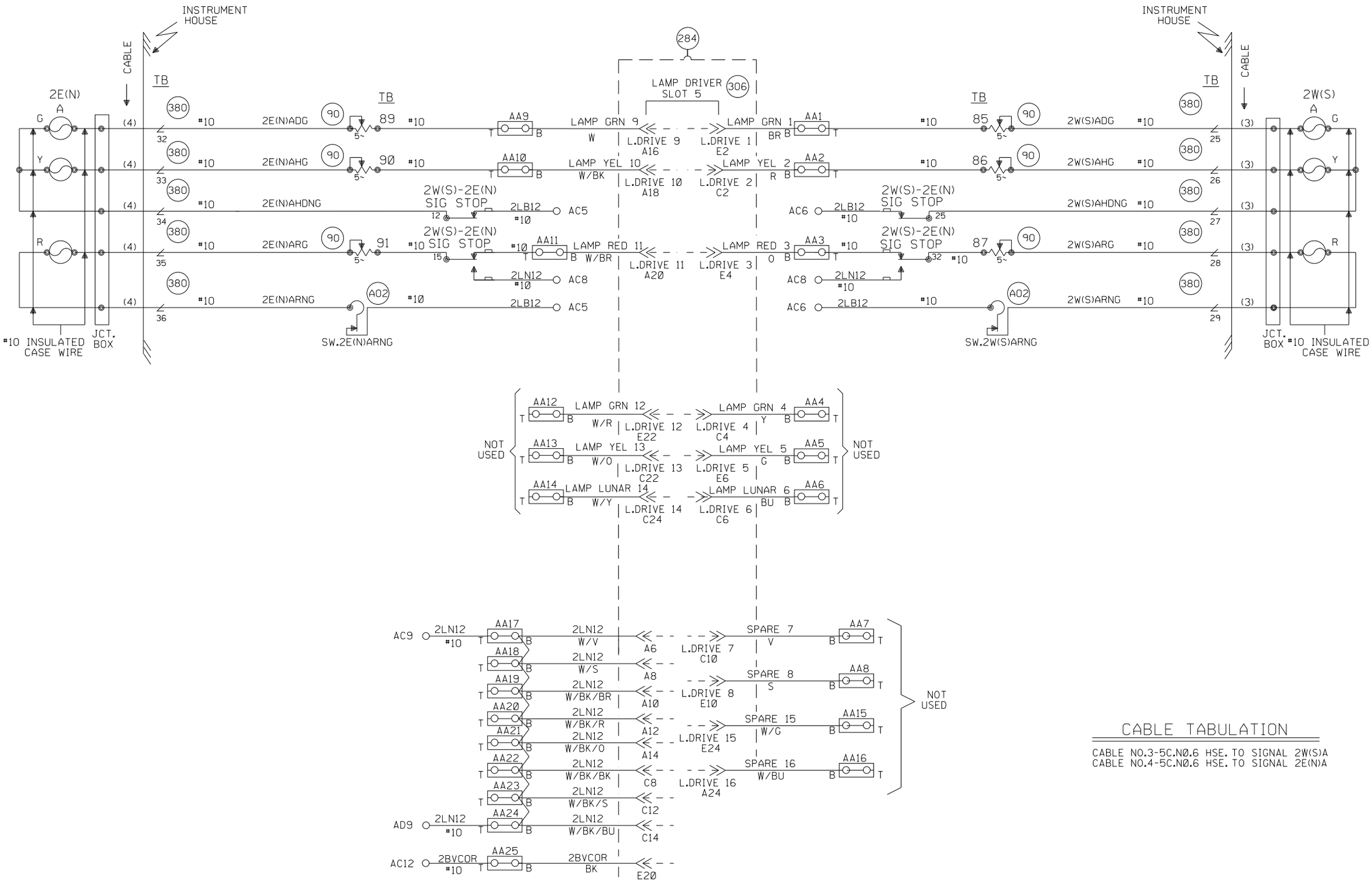

CABLE TABULATION

CABLE NO.3-5C.N0.6 HSE. TO SIGNAL 2W(S)A
CABLE NO.4-5C.N0.6 HSE. TO SIGNAL 2E(N)A

NEW SHEET

Designed: 08/21/12
TIER 3 PHASE 3
M.P.177.00 TO M.P.160.00
UPGRADE XINGS AND CP'S FOR HIGH SPEED RAIL
Rec#: WO#: 22820
IS: /MWK
/NST/MJF

MODIFICATION LEVEL	
Q.A. LAST LEVEL CHECKED	DU
LAST LEVEL MOD THIS TYPICAL	DU
LAST LEVEL BY DESIGNER	DU
CHANGED FROM TYPICAL?	Y

REV 8/20/10 1TMLHBINTUGS.3

CIRCUIT MODIFICATIONS ARE NOT TO BE MADE WITHOUT AUTHORITY FROM THE OFFICE OF SIGNAL DESIGN

Date: 08/21/12
Des: NST
Chk: MWK
AFE: 22820

UNION PACIFIC RAILROAD

TWO TRACK INTERMEDIATE
SPRINGFIELD SUBDIVISION

Office of AVP Engineering - Signal Omaha, Nebraska

Sh.: 7
MP: 166.85
ID: CSL16685.7S

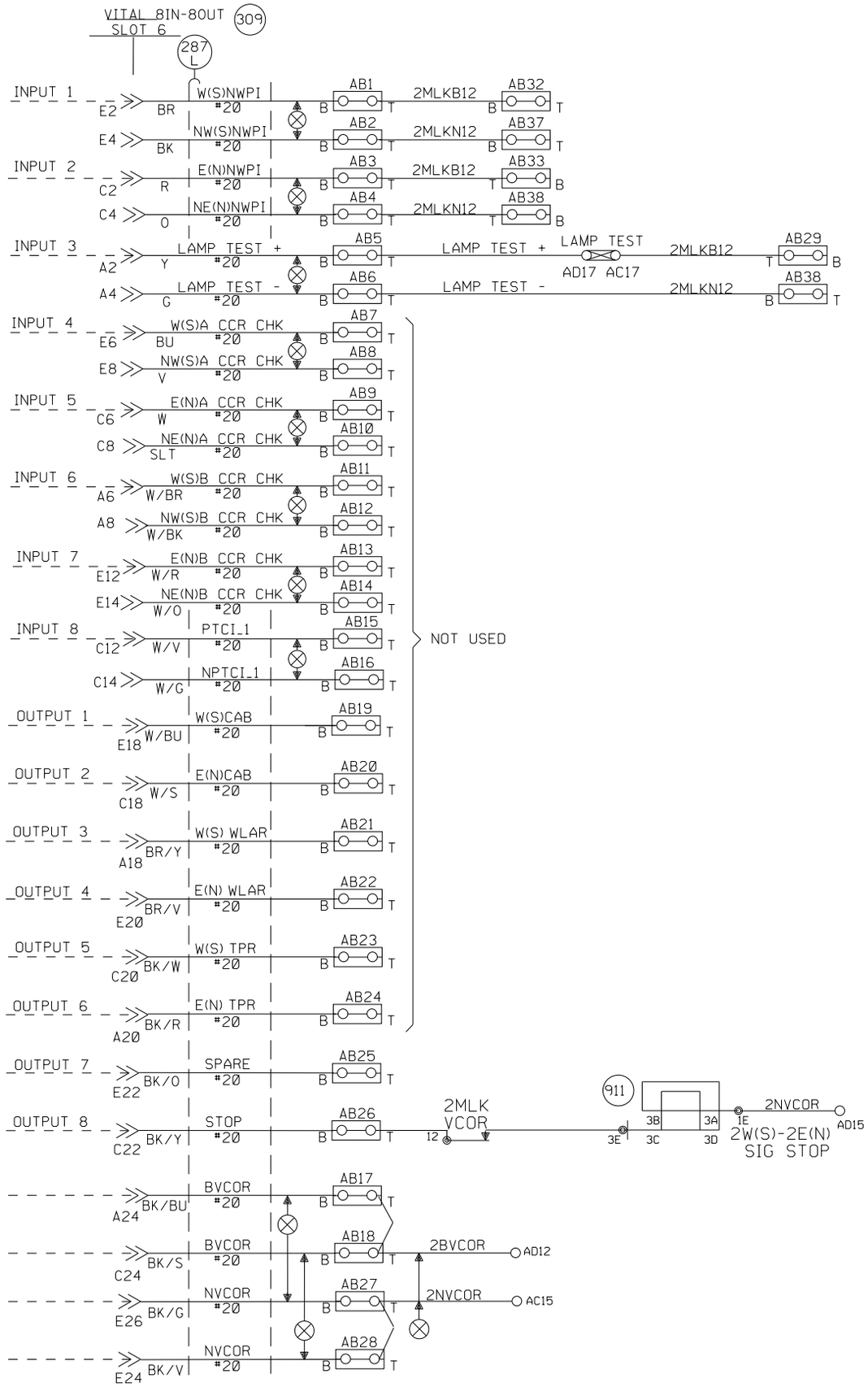

NEW SHEET

Designed: 08/21/12 TIER 3 PHASE 3 M.P.177.00 TO M.P.160.00 UPGRADE XINGS AND CP'S FOR HIGH SPEED RAIL Rec#: WO#:22820 IS: /MWK / /NST/MJF	MODIFICATION LEVEL		CIRCUIT MODIFICATIONS ARE NOT TO BE MADE WITHOUT AUTHORITY FROM THE OFFICE OF SIGNAL DESIGN	Date: 08/21/12 Des: NST Chk: MWK AFE: 22820	UNION PACIFIC RAILROAD TWO TRACK INTERMEDIATE SPRINGFIELD SUBDIVISION Office of AVP Engineering - Signal Omaha, Nebraska	Sh.: 7A MP: 166.85 ID: CSL16685.7AS
	Q.A. LAST LEVEL CHECKED	DU				
	LAST LEVEL MOD THIS TYPICAL	DU				
	LAST LEVEL BY DESIGNER	DU				
	CHANGED FROM TYPICAL? REV 8/20/10 1TMLHBINTU.3A	Y				

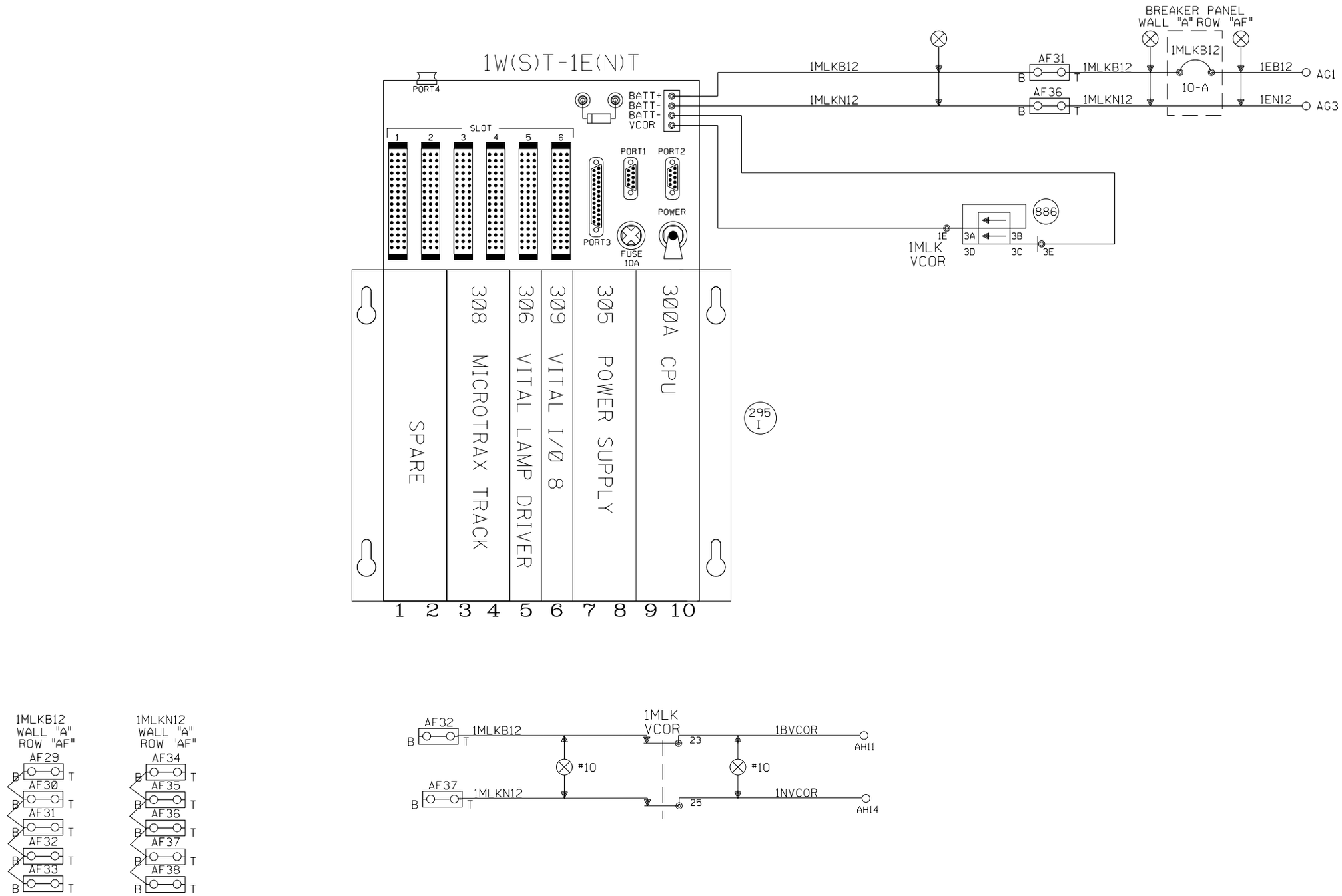

NEW SHEET

					Designed: 08/21/12 TIER 3 PHASE 3 M.P.177.00 TO M.P.160.00 UPGRADE XINGS AND CP'S FOR HIGH SPEED RAIL Rec#: WO#: 22820 IS: /MWK / /NST/MJF	MODIFICATION LEVEL		CIRCUIT MODIFICATIONS ARE NOT TO BE MADE WITHOUT AUTHORITY FROM THE OFFICE OF SIGNAL DESIGN	Date: 08/21/12 Des: NST Chk: MWK AFE: 22820	UNION PACIFIC RAILROAD TWO TRACK INTERMEDIATE SPRINGFIELD SUBDIVISION Office of AVP Engineering - Signal Omaha, Nebraska	Sh.: 8 MP: 166.85 ID: CSL16685.8S
						Q.A. LAST LEVEL CHECKED	DU				
						LAST LEVEL MOD THIS TYPICAL	DU				
						LAST LEVEL BY DESIGNER	DU				
						CHANGED FROM TYPICAL? REV 8/20/10 1TMLHBINTU.4	Y				

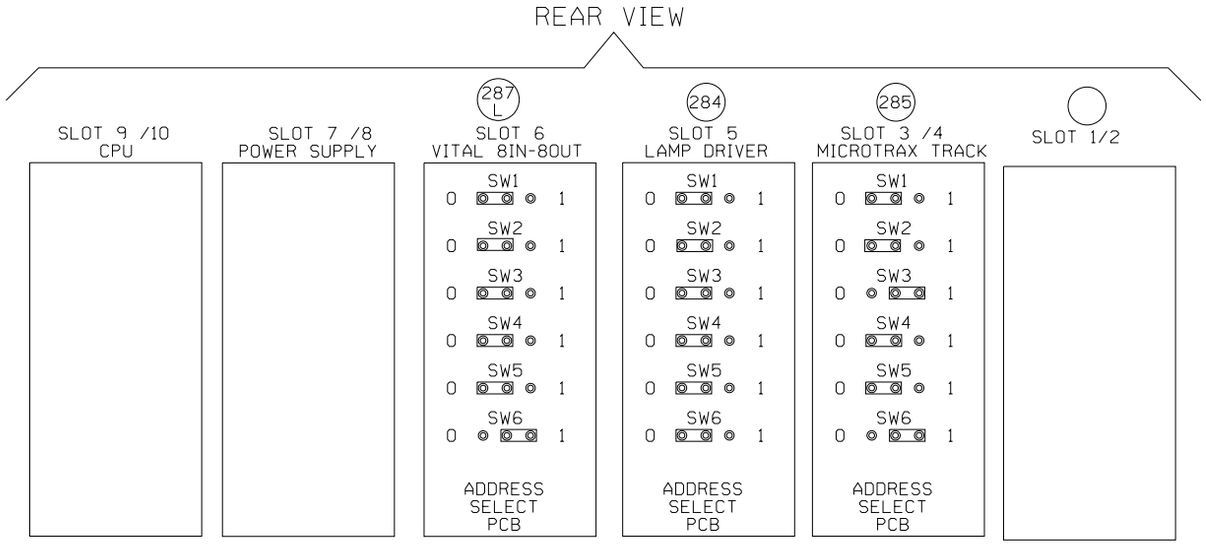

NOTE: FOR PTC COMPATIBLE CPU JUMPER SETTINGS REFER TO ANSALDO MANUAL 1D1.0028 PAGE 1-26 1-27 1-28 REV.1 DATE 8/2009

ML8UP5060-N

IF BOX CHECKED SET APPROPRIATE PROG. ID

15 SEC SLOW PICK ET TO PREVENT JOINT HOP		USE WHEN INTERFACING MICRO-ECODE TO GETS ECODE
15 SEC SLOW PICK WT TO PREVENT JOINT HOP		USE WHEN INTERFACING MICRO-ECODE TO GETS ECODE
APPROACH TO #30 WEST?		(SET PROG ID 1)
APPROACH TO #30 EAST?		(SET PROG ID 2)
Y/G W/B SEND Y/FG EAST?		(SET PROG ID 3)
Y/G E/B SEND Y/FG WEST?		(SET PROG ID 5)
Y/G W/B SEND GREEN EAST?	X	(SET PROG ID 4)
Y/G E/B SEND GREEN WEST?		(SET PROG ID 6)
Y/FG W/B SEND GREEN EAST		(SET PROG ID 8)
Y/FG E/B SEND GREEN WEST		(SET PROG ID 9)
PROGRAM ID 1 (BINARY 1)		
PROGRAM ID 2 (BINARY 2)		
PROGRAM ID 3 (BINARY 4)		
PROGRAM ID 4 (BINARY 8)	X	
PROGRAM ID 5 (BINARY 16)		
PROGRAM ID 6 (BINARY 32)		
PROGRAM ID 7 (BINARY 64)		(SET TO DISABLE VI08 CAB)
PROGRAM ID 8 (BINARY 128)		
PROGRAM ID 9 (BINARY 256)		
PROGRAM ID 10 (BINARY 512)		(MUST BE CLEAR)
PROGRAM ID 11 (BINARY 1024)	X	(MUST BE SET)
PROGRAM ID 12 (BINARY 2048)		(SET TO DISABLE INCAND. SIG BOARD)
PROGRAM ID 13 (BINARY 4096)	X	(SET TO DISABLE LED SIG BOARD)
PROGRAM ID 14 (BINARY 8192)		
PROGRAM ID 15 (BINARY 16384)		
PROGRAM ID 16 (BINARY 32768)		
PROGRAM ID 17 (BINARY 65536)	X	
PROGRAM ID 18 (BINARY 131072)		
PROGRAM ID 19 (BINARY 262144)		
PROGRAM ID 20 (BINARY 524288)		
PROGRAM ID 21 (BINARY 1048576)		
WEST TK UP SEND C5 EAST	X	
REC C5 W TK SEND C5 EAST		
EAST TK UP SEND C5 WEST	X	
REC C5 E TK SEND C5 WEST		
W(S) "B" HEAD FLASHING RED		(SET PROG ID 14)
W(S) "B" HEAD LUNAR		(SET PROG ID 15)
W(S) "B" HEAD YELLOW		(SET PROG ID 16)
W(S) "B" HEAD GREEN	X	(SET PROG ID 17)
E(N) "B" HEAD FLASHING RED		(SET PROG ID 18)
E(N) "B" HEAD LUNAR		(SET PROG ID 19)
E(N) "B" HEAD YELLOW		(SET PROG ID 20)
E(N) "B" HEAD GREEN		(SET PROG ID 21)
E(N) C5 APPLIT	X	(ENABLE APPLIT W(S) SIG W/LOSS OF C5)
W(S) C5 APPLIT	X	(ENABLE APPLIT E(N) SIG W/LOSS OF C5)

PLACE AN "X" IN THE BOX TO REPRESENT A SET STATE.

1W(S)T-1E(N)T

NEW SHEET

Designed: 08/21/12
TIER 3 PHASE 3
M.P.177.00 TO M.P.160.00
UPGRADE XINGS AND CP'S FOR HIGH SPEED RAIL
Rec#: WO#: 22820
IS: /MWK / /NST/MJF

MODIFICATION LEVEL	
Q. A. LAST LEVEL CHECKED	DU
LAST LEVEL MOD THIS TYPICAL	DU
LAST LEVEL BY DESIGNER	DU
CHANGED FROM TYPICAL?	Y

REV 8/20/10 1TMLHBINTU.5

CIRCUIT MODIFICATIONS ARE NOT TO BE MADE WITHOUT AUTHORITY FROM THE OFFICE OF SIGNAL DESIGN

Date: 08/21/12
Des: NST
Chk: MWK
AFE: 22820

UNION PACIFIC RAILROAD

TWO TRACK INTERMEDIATE
SPRINGFIELD SUBDIVISION

Office of AVP Engineering - Signal Omaha, Nebraska

Sh.: 9
MP: 166.85
ID: CSL16685.9S

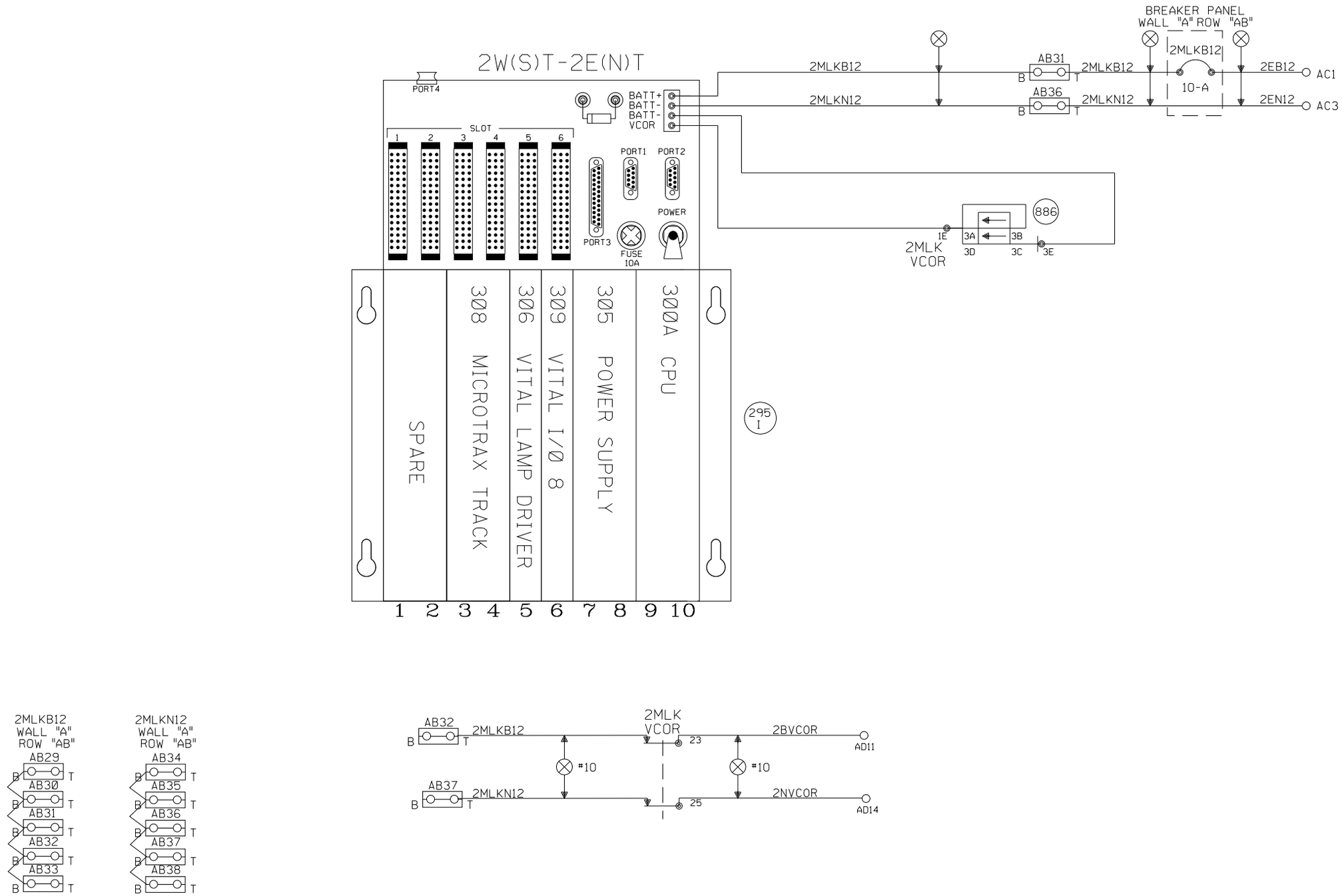

NEW SHEET

					Designed: 08/21/12 TIER 3 PHASE 3 M.P.177.00 TO M.P.160.00 UPGRADE XINGS AND CP'S FOR HIGH SPEED RAIL Rec#: WO#: 22820 IS: /MWK / /NST/MJF	MODIFICATION LEVEL Q.A. LAST LEVEL CHECKED DU LAST LEVEL MOD THIS TYPICAL DU LAST LEVEL BY DESIGNER DU CHANGED FROM TYPICAL? Y REV 8/20/10 1TMLHBINTU.4	CIRCUIT MODIFICATIONS ARE NOT TO BE MADE WITHOUT AUTHORITY FROM THE OFFICE OF SIGNAL DESIGN	Date: 08/21/12 Des: NST Chk: MWK AFE: 22820	UNION PACIFIC RAILROAD TWO TRACK INTERMEDIATE SPRINGFIELD SUBDIVISION Office of AVP Engineering - Signal Omaha, Nebraska	Sh.: 10 MP: 166.85 ID: CSL16685.10S

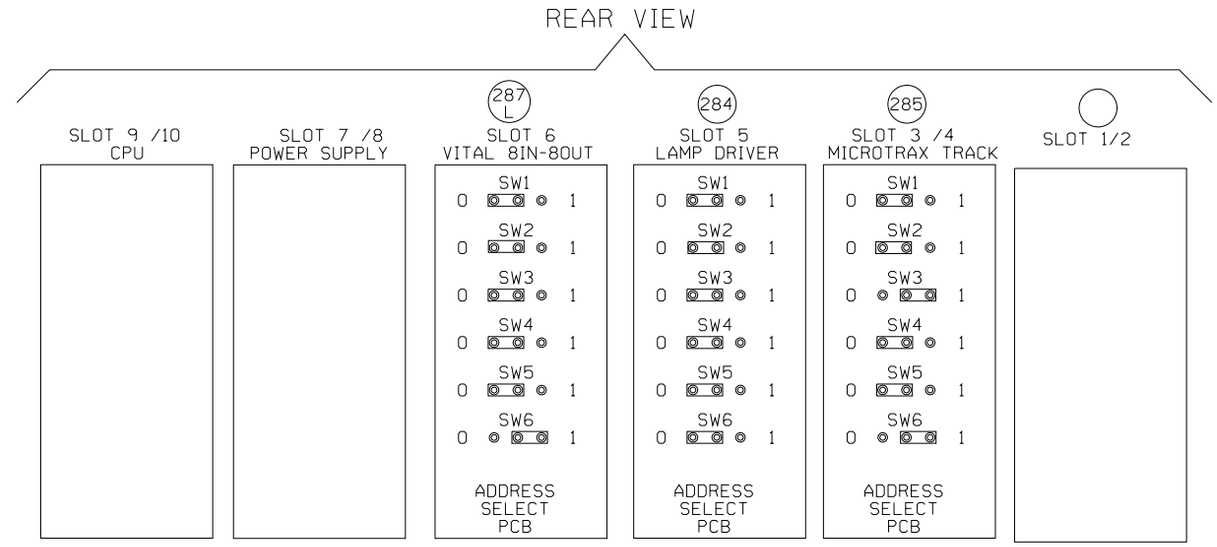

NOTE: FOR PTC COMPATIBLE CPU JUMPER SETTINGS REFER TO
ANSALDO MANUAL 1D1.0028 PAGE 1-26 1-27 1-28 REV.1 DATE 8/2009

IF BOX CHECKED SET
APPROPRIATE PROG. ID

ML8UCCB REV. N

15 SEC SLOW PICK ET TO PREVENT JOINT HOP		USE WHEN INTERFACING MICRO-ECODE TO GETS ECODE
15 SEC SLOW PICK WT TO PREVENT JOINT HOP		USE WHEN INTERFACING MICRO-ECODE TO GETS ECODE
DISABLE DBFY EAST ?	X	(SET PROG ID 1)
DISABLE DBFY WEST ?	X	(SET PROG ID 2)
PROGRAM ID 1 (BINARY 1)	X	
PROGRAM ID 2 (BINARY 2)	X	
PROGRAM ID 3 (BINARY 4)		(MUST BE CLEAR)
PROGRAM ID 4 (BINARY 8)		(MUST BE CLEAR)
PROGRAM ID 5 (BINARY 16)		(MUST BE CLEAR)
PROGRAM ID 6 (BINARY 32)		(MUST BE CLEAR)
PROGRAM ID 7 (BINARY 64)		(SET TO DISABLE VIO8 CAB)
PROGRAM ID 8 (BINARY 128)	X	(MUST BE SET)
PROGRAM ID 9 (BINARY 256)		(SET TO DISABLE INCAND. SIG BOARD)
PROGRAM ID 10 (BINARY 512)	X	(SET TO DISABLE LED SIG BOARD)
PROGRAM ID 11 (BINARY 1024)		
PROGRAM ID 12 (BINARY 2048)		
PROGRAM ID 13 (BINARY 4096)		
PROGRAM ID 14 (BINARY 8192)		
PROGRAM ID 15 (BINARY 16384)		
PROGRAM ID 16 (BINARY 32768)		
WEST TK UP SEND C5 EAST	X	
REC C5 W TK SEND C5 EAST		
EAST TK UP SEND C5 WEST	X	
REC C5 E TK SEND C5 WEST		
SET IF W(S) "B" FLASHING RED		(SET PROG ID 11)
SET IF W(S) "B" LUNAR		(SET PROG ID 12)
SET IF W(S) "B" YELLOW		(SET PROG ID 13)
SET IF E(N) "B" FLASHING RED		(SET PROG ID 14)
SET IF E(N) "B" LUNAR		(SET PROG ID 15)
SET IF E(N) "B" YELLOW		(SET PROG ID 16)
E(N) C5 APPLIT	X	(ENABLE APPLIT W(S) SIG W/LOSS OF C5)
W(S) C5 APPLIT	X	(ENABLE APPLIT E(N) SIG W/LOSS OF C5)

2W(S)T-2E(N)T

NEW SHEET

Designed: 08/21/12
TIER 3 PHASE 3
M.P.177.00 TO
M.P.160.00
UPGRADE XINGS AND
CP'S FOR HIGH
SPEED RAIL
Rec#: WO#:22820
IS: /MWK
/ /NST/MJF

MODIFICATION LEVEL	
Q. A. LAST LEVEL CHECKED	DU
LAST LEVEL MOD THIS TYPICAL	DU
LAST LEVEL BY DESIGNER	DU
CHANGED FROM TYPICAL?	Y
REV 8/20/10 1TMLHBINTU.5	

CIRCUIT MODIFICATIONS ARE NOT TO BE MADE WITHOUT AUTHORITY FROM THE OFFICE OF SIGNAL DESIGN

Date: 08/21/12
Des: NST
Chk: MWK
AFE: 22820

UNION PACIFIC RAILROAD

TWO TRACK INTERMEDIATE
SPRINGFIELD SUBDIVISION

Office of AVP Engineering - Signal Omaha, Nebraska

Sh.: 11
MP: 166.85
ID: CSL16685.11S

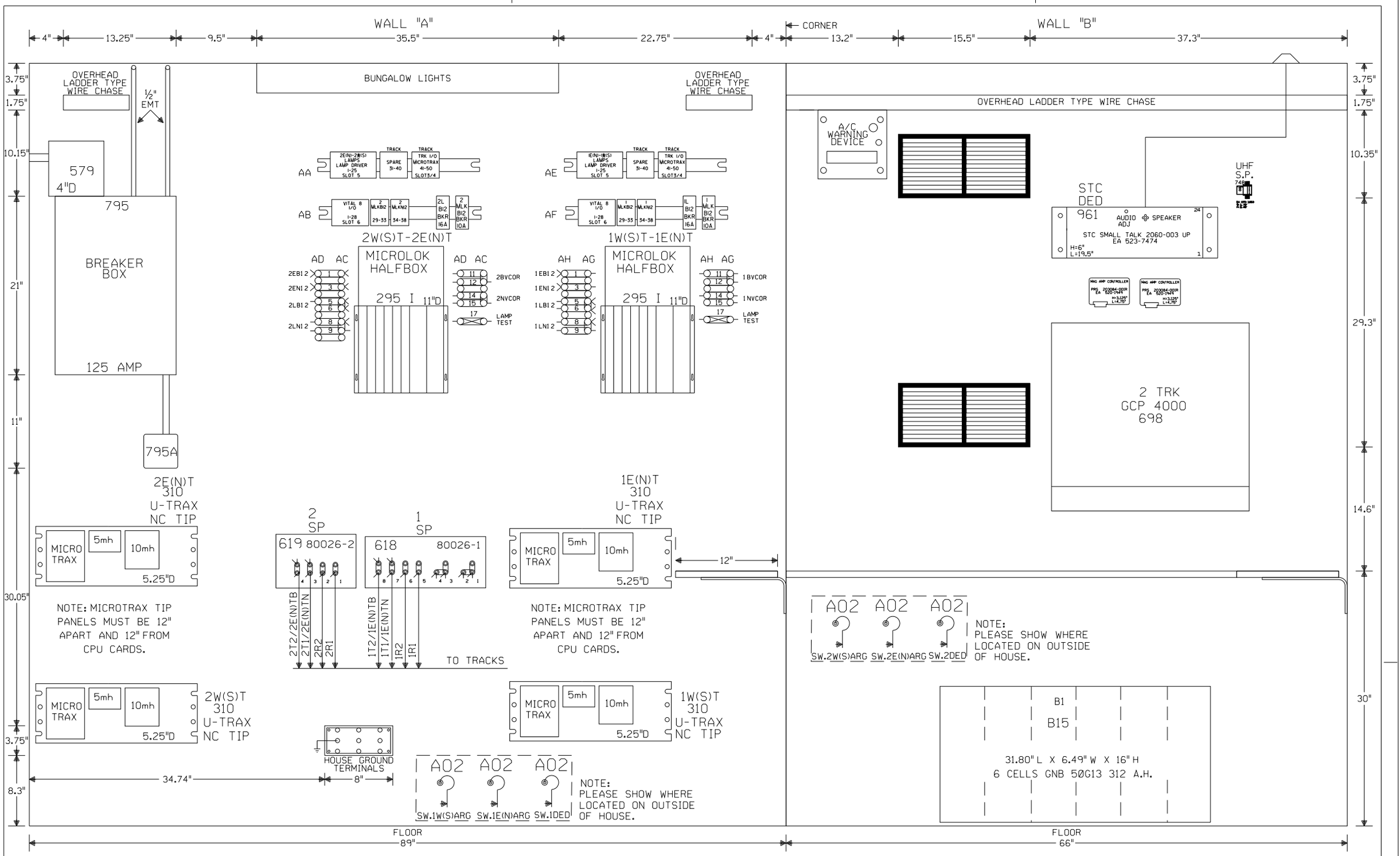

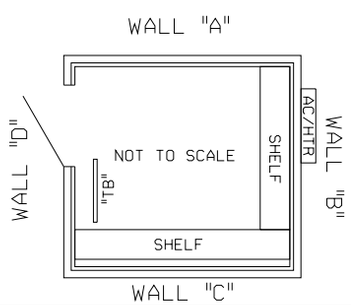

NOTE: ALL DIMENSIONS SHOWN ARE APPROXIMATE.

NEW SHEET

Designed: 08/21/12 TIER 3 PHASE 3 M.P.177.00 TO M.P.160.00 UPGRADE XINGS AND CP'S FOR HIGH SPEED RAIL Rec'd: WO#: 22820 IS: /MWK / /NST/MJF	CIRCUIT MODIFICATIONS ARE NOT TO BE MADE WITHOUT AUTHORITY FROM THE OFFICE OF SIGNAL DESIGN	Date: 08/21/12	UNION PACIFIC RAILROAD	Sh.: 12
		Des: NST		
		Chk: MWK	TWO TRACK INTERMEDIATE SPRINGFIELD SUBDIVISION	MP: 166.85
		AFE: 22820	Office of AVP Engineering - Signal Omaha, Nebraska	ID: CSL16685.12S

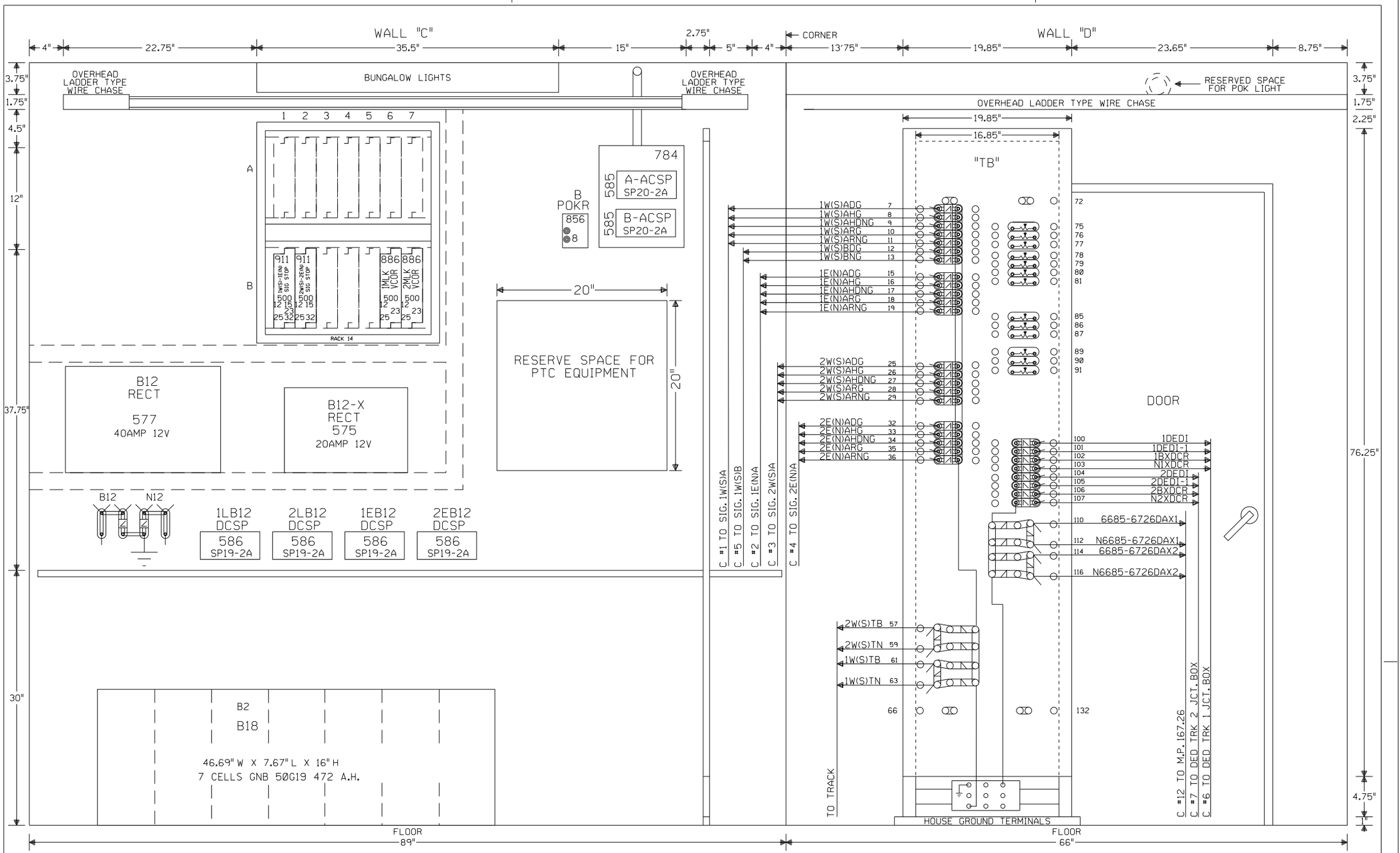

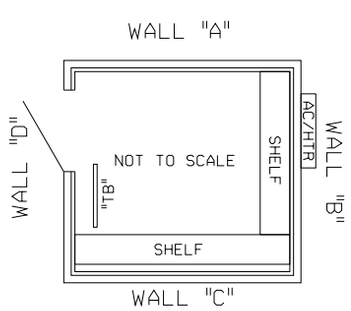

NOTE: ALL DIMENSIONS SHOWN ARE APPROXIMATE.

NEW SHEET

Designed: 08/21/12 TIER 3 PHASE 3 M.P.177.00 TO M.P.160.00 UPGRADE XINGS AND CP'S FOR HIGH SPEED RAIL Rec': WO': 22820 IS: /MWK /NST/MJF	CIRCUIT MODIFICATIONS ARE NOT TO BE MADE WITHOUT AUTHORITY FROM THE OFFICE OF SIGNAL DESIGN	Date: 08/21/12	UNION PACIFIC RAILROAD	Sh.: 13	
		Des: NST	TWO TRACK INTERMEDIATE SPRINGFIELD SUBDIVISION		
		Chk: MWK		MP: 166.85	
		AFE: 22820	Office of AVP Engineering - Signal Omaha, Nebraska	ID: CSL16685.13S	

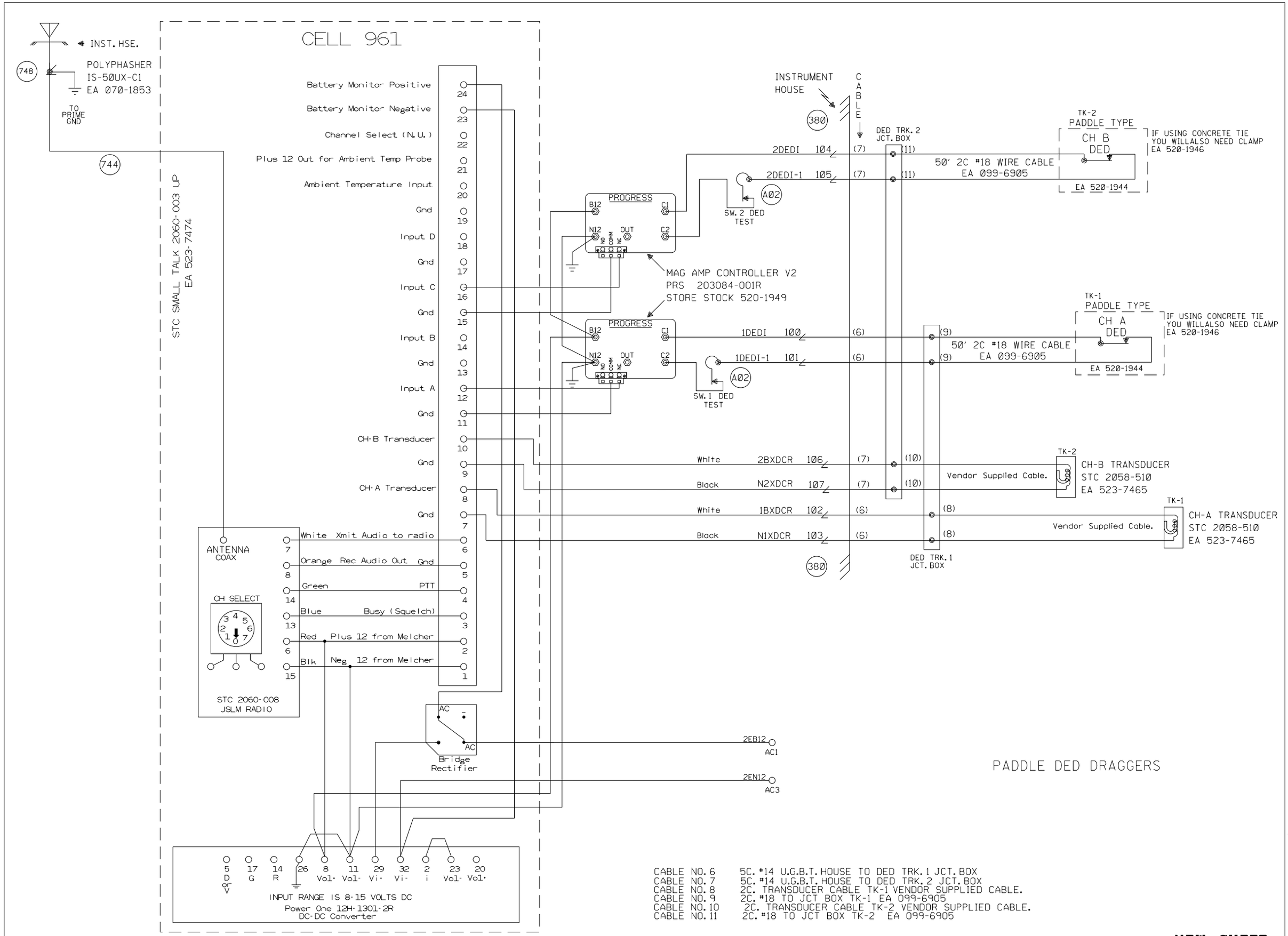

CABLE NO. 6 5C. #14 U.G.B.T. HOUSE TO DED TRK. 1 JCT. BOX
CABLE NO. 7 5C. #14 U.G.B.T. HOUSE TO DED TRK. 2 JCT. BOX
CABLE NO. 8 2C. TRANSDUCER CABLE TK-1 VENDOR SUPPLIED CABLE.
CABLE NO. 9 2C. #18 TO JCT BOX TK-1 EA 099-6905
CABLE NO. 10 2C. TRANSDUCER CABLE TK-2 VENDOR SUPPLIED CABLE.
CABLE NO. 11 2C. #18 TO JCT BOX TK-2 EA 099-6905

NEW SHEET

Designed: 08/21/12
TIER 3 PHASE 3
M.P.177.00 TO M.P.160.00
UPGRADE XINGS AND CP'S FOR HIGH SPEED RAIL
Rec'd: WO#: 22820
IS: /MWK / /NST/MJF

MODIFICATION LEVEL	
Q.A. LAST LEVEL CHECKED	DD
LAST LEVEL MOD THIS TYPICAL	DP
LAST LEVEL BY DESIGNER	DU
CHANGED FROM TYPICAL?	Y
REV 02/26/07 2TE51NTC.2PD	

CIRCUIT MODIFICATIONS ARE NOT TO BE MADE WITHOUT AUTHORITY FROM THE OFFICE OF SIGNAL DESIGN

Date: 08/21/12
Des: NST
Chk: MWK
AFE: 22820

UNION PACIFIC RAILROAD

TWO TRACK INTERMEDIATE
SPRINGFIELD SUBDIVISION

Office of AVP Engineering - Signal Omaha, Nebraska

Sh.: 14
MP: 166.85
ID: CSL16685.14S