# Mt. Vernon Substation
## (a.k.a. 11th St. Sub)

# Rebuild Plan


- **Introduction…… 2**
- **Rebuild Options**
  - **Option 1** (not recommended): **Rebuild the substation with the same configuration as is today, on a site adjacent to the existing sub …… 2**
    - **MTV 11th St. Sub One-line: Rebuild the sub as is…… 3**
  - **Option 2** (recommended): **Rebuild some parts of the 11th St. Sub on an adjecent site, and relocate other parts to a different site. …….. 3**
    - **MTV 11th St. Sub One-line: Rebuild Option A** (not recommended) **… 6**
    - **MTV 11th St. Sub One-line: Rebuild Option B (**recommended) **…….. 6**
    - **Proposed Fairfield Rd. Sub One-line…….. 7**
- **Appendices:**
  - **Distribution Substation Reserve Criteria…… 8**
  - **Area Load and Substation Capacity …… 8**
  - **Customer Counts…… 9**
  - **Cost Estimate Summary……. 10**
  - **General Location Map……... 11**
  - **Simplified System One-line……. 12**
  - **Bluford Substation Pictures 13**


**Adib Tashakkor**
**March, 2013**

# Introduction

Mt Vernon 11th St. Substation is scheduled for rebuild due to age, condition, equipment layout, safety concerns, obesolesence, and heavily loaded equipment.

The 34 KV circuit breakers were manufactured in the early 1950's. The low voltage portion of the substation was built in the late 1940's and early 1950's. The 4 KV circuits and bus are in very close prioximity in which multiple circuits must be taken out of service to perform maintenance. Based on spacing and minimum approch distances, it is next to impossible to get switches, bus connectors, etc. out of service in timely manner to make repairs.

Due to physical constraints of the existing steel structure, replacement of the 34/4 KV transformers will be very slow. The transformers will have to be skidded out (which we are not set up to do) instead of a crane which is normally used in other substation. Due to the layout of the substation, the 12 KV transformer #2 cannot be replaced without removing the 4 KV transformer #4. As a result of this situation, restoration time is longer than normal. A mobile installation is also hampered due to the existing bus and line configuration.

The 12 KV transformer is rated for 7 MVA. The transformer's 2011 weather-normalized actual loading was 7.1 MVA. One of the feeders (Ckt. 107) has now been transferred to MTV 27th St. Substation, but the remaining load (Ckt. 108) is still about 6.2 MVA with no feeder ties.

The current multi-year project (2013-2015) to rebuild the substation has an approved budget of approximately $5,000,000. The 2013 budget is $498,000; 2014 is $2,487,000; and the 2015 is $2,024,000.

# Rebuild Options

## Option 1 (not recommended): Rebuild the substation with the same configuration as is today, on a site adjacent to the existing sub.

For this option the new substation will consist of

- Five 34.5 KV line terminal breakers for Lines 3463, 3321, 3336, 3322, and 3465,
- Two 34.5/4.16 KV distribution transformers and six feeders,
- and one 34.5/12 KV distribution transformer with two feeders.

The two 4.16 KV distribution units will consist of a 14 MVA transformer with LTC and metal-clad switchgear with 4 feeders each. The 34.5/12.47 KV unit will consist of a 14 MVA transformer with 2 feeders (open-air design).

Below is a simplified one-line of a possible rebuild of the existing substation that functionally mimics the existing sub. The sub will replace the old equipment with new facilities. This direct replacement of facilities is not recommended by Planning. The recommended Plan as presented here in Option 2 will better utilize the available resources and integrate the rebuild into a more comperehensive plan.

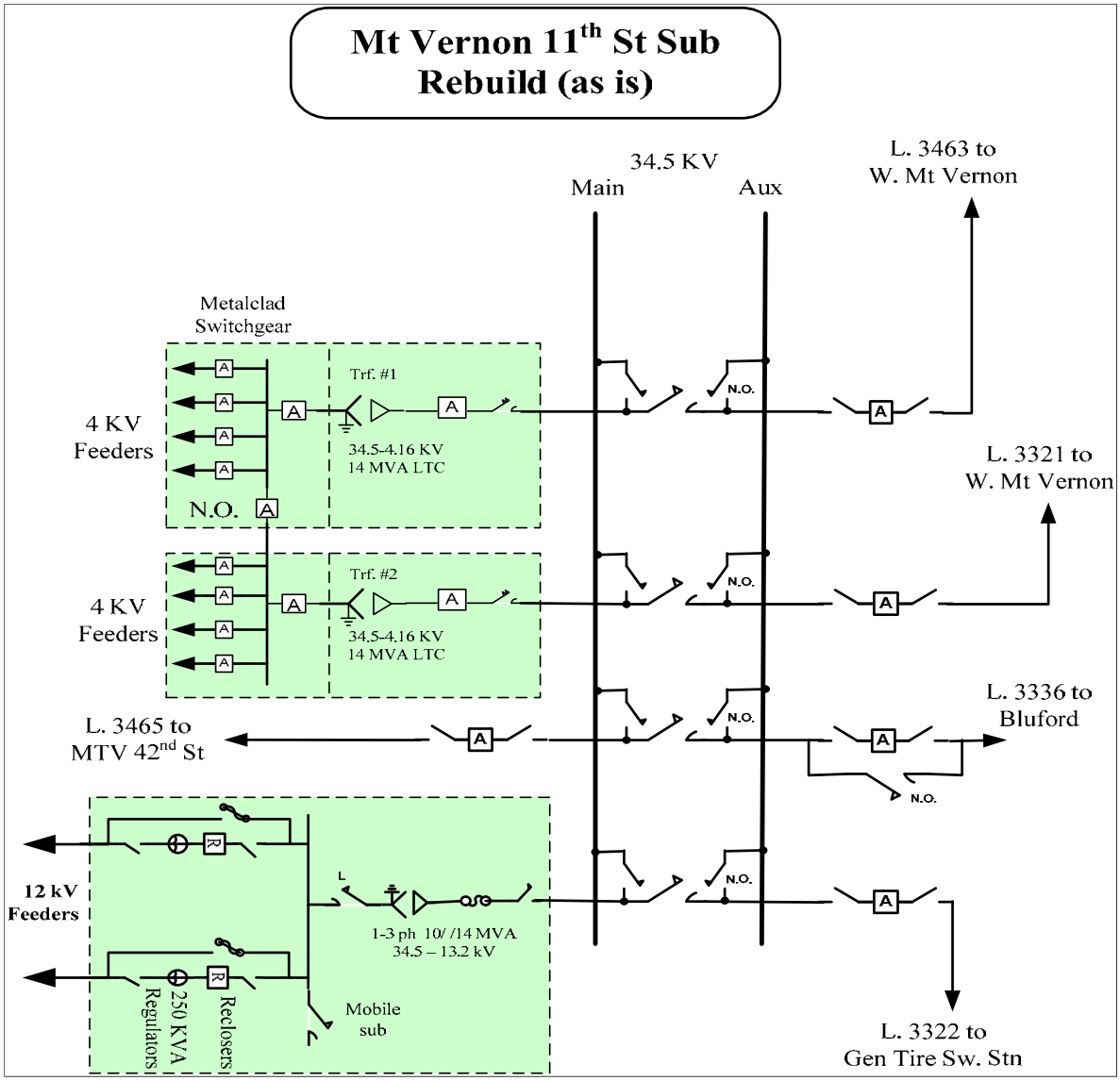


## Option 2 (Recommended): Rebuild some parts of the 11th St. Substation on an adjecent site, and relocate other parts to a different site.

After multiple discussions between Planning, Division Engineering, and Operations, it was decided that a more comperehensive plan should be devised that would better serve the needs of the area. The recommendations listed below includes a longer range plan for the area and will address multiple issues, such as the future load growth, reseve capacity, service reliability, and the needs of other substation:

- **A: Rebuild Mt Vernon 11th St. Sub with five 34.5 KV terminals and one 34.5/4.16KV, 14 MVA distribution transformer on the adjacent site (Option 2 one-line).** The 34.5KV line terminals need to be rebuild to maintain the network. A ring bus (Option 2 one-line) provides operational flexibility and supply reliability to the large load at Continental Tire. Only one 4.16

KV distribution transformer is needed at this site to serve the 4.16 KV core load in downtown Mt. Vernon.

- Substation Cost:
- Feeder Cost (combining existing 6 feeder to 4): $30,000

- **B: Upgrade the 34.5/4.16 KV, 5.25 MVA transformer at Gaskin St. with a 10.5 MVA transformer removed from 11th St. Sub.** The additional capacity at Gaskin St. will provide reseve capacity for loss of 11th St. transformer.

  - Substation Cost:
  - Feeder Cost: $0

- **C: Remove Hendrix spacer cables and build 4.16 KV feeder ties between Mt. Vernon 11th St., Gaskin St., and Car Shops Substations.** The feeder ties will provide reserve capacity and switching felxibility between the three 4.16 KV transformers in the area.

  - Substation Cost: $0
  - Feeder Cost (Hendrix removal): $75,000

- **D: Build a new 34.5/12.47 KV substation (Fairfield Rd) on a new site somewhere between Mt. Vernon and Bluford.** This subststion will serve Ckt. 108 (about 7 MVA) which is currently being fed from Mt. Vernon 11th St. Sub. Due to Ameren's limited service terretory in this area the potential future load growth is limited. A 14 MVA transformer is recommended for this sub. A 34.5 KV line along Fairfield Rd is the only available source in the area. A new site near the line should be purchased for the substation.

  - Substation Cost:
  - Feeder Cost (substation exists): $75,000

- **E: Build a 12.47KV feeder tie between the proposed Fairfield Rd Sub Ckt. 108 and Gaskin St. Ckt. 112 to provide reserve capacity.** The proposed Fairfield Rd sub would also be tied to Mt. Vernon 27th St. substation with two 22.4 MVA transformers, and Brownsville Rd. Substation with one 10.5 MVA transformer. Future capacity addition could be achieved by upgrading Brownsville Rd transformer.

  - Feeder Cost (construct 12KV tie with Ckt. 108): $500,000

- **F: Reconductor approximately 1 mile of Line 3336 which is currenty #2 HDBC originally built in 1926.** The reconductoring from 11th St to Str #35 is necessary to increase the line's capacity for added load. The rebuild will also help with replacement of 12 KV Hendrix underbuilt. The recommended conductor for the 34 KV line is 556 AAC (41.4 MVA normal/45.6 MVA emergency rating).

  - Line Cost: $350,000

- **G: Retire Bluford substation and feed the 2 MVA load from the proposed Fairfield Substation.** Bluford sub is also on the list of substations needing rebuild due to condition. The substation is built on a small site with 3 single-phase transformers manufactured in 1953. The spacings are tight and present risk to the personel operating the equipment. The site has

enviromental issues that make modifications to the sub impractical. Construction of Fairfield Rd Sub will allow Bluford to be retired and the load to be fed from the new Substation. Bluford Substation pictures are attached.

- Substation Cost: $0
- Feeder Cost : $50,000

- **H: Retire a section of Line 3336.** Since Bluford is the last substation on a radial line, we can retire about 5 miles of Line 3336, thus reducing the exposure to the proposed Fairfield Rd and Marlow REA substations. The recommended reconductoring of a section of the line and the reduction of its exposure by 40% would improve the line's reliability.

  - Substation Cost:
  - Feeder Cost (use retired 34 KV line as 12 KV feeder for Bluford): $100,000

- **I: Add fans to Gaskin St. Trf. #2.** The fans will increase the 12KV transformer's normal rating from 8.4 to 10.5 MVA. The current loading at this transformer is 7.7 MVA. The increased rating will provide some reserve capacity. The transformer could be upgraded to 14 MVA in the future.

  - Substation Cost:

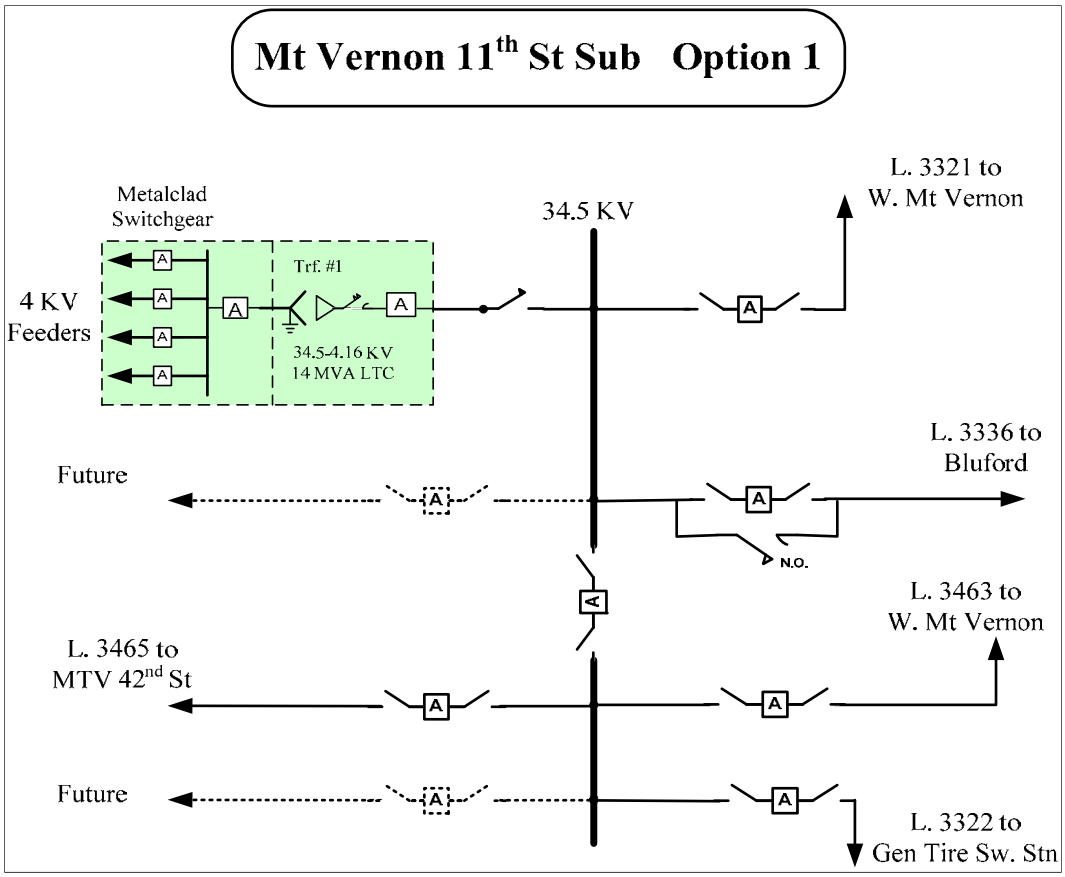
Mt Vernon 11th St Sub Option 1
Metalclad Switchgear
4 KV Feeders
Trf. #1
34.5-4.16 KV
14 MVA LTC
34.5 KV
L. 3321 to W. Mt Vernon
L. 3336 to Bluford
Future
N.O.
L. 3463 to W. Mt Vernon
L. 3465 to MTV 42nd St
Future
L. 3322 to Gen Tire Sw. Stn

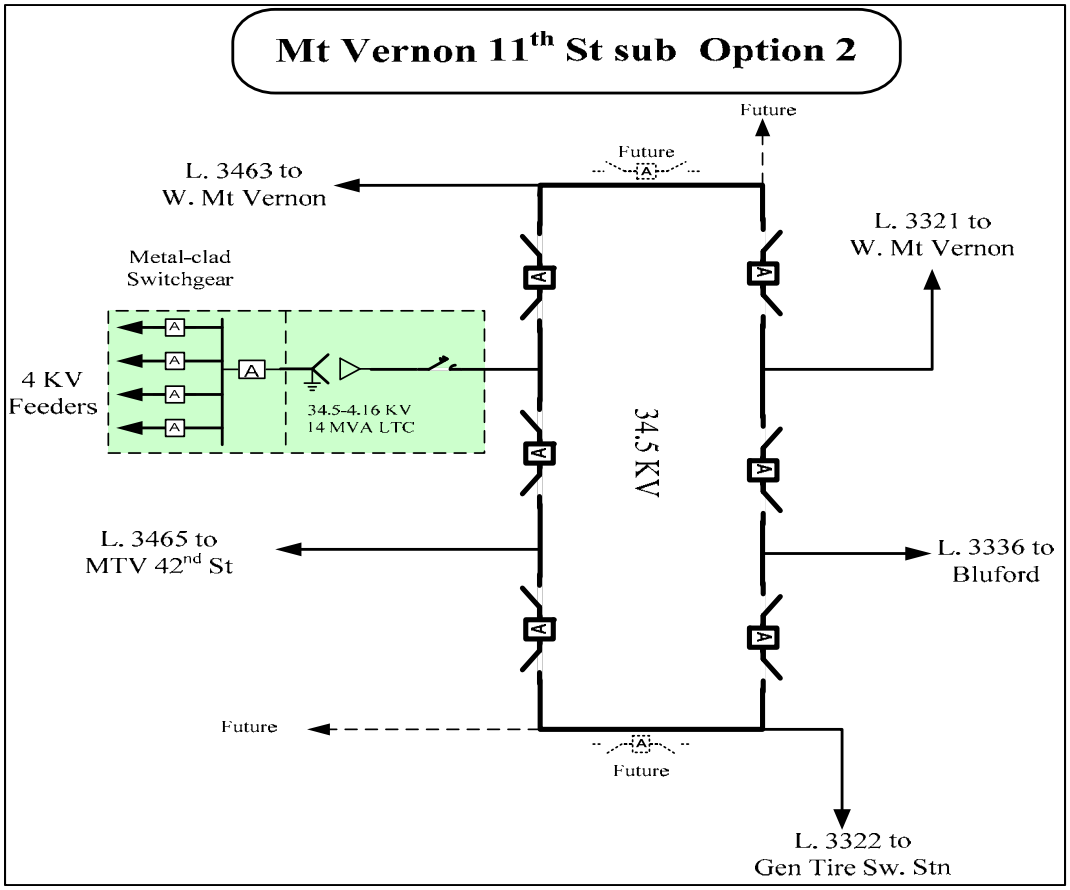
Mt Vernon 11th St sub Option 2
Future
Future
L. 3463 to W. Mt Vernon
L. 3321 to W. Mt Vernon
Metal-clad Switchgear
4 KV Feeders
34.5-4.16 KV
14 MVA LTC
34.5 KV
L. 3465 to MTV 42nd St
L. 3336 to Bluford
Future
Future
L. 3322 to Gen Tire Sw. Stn

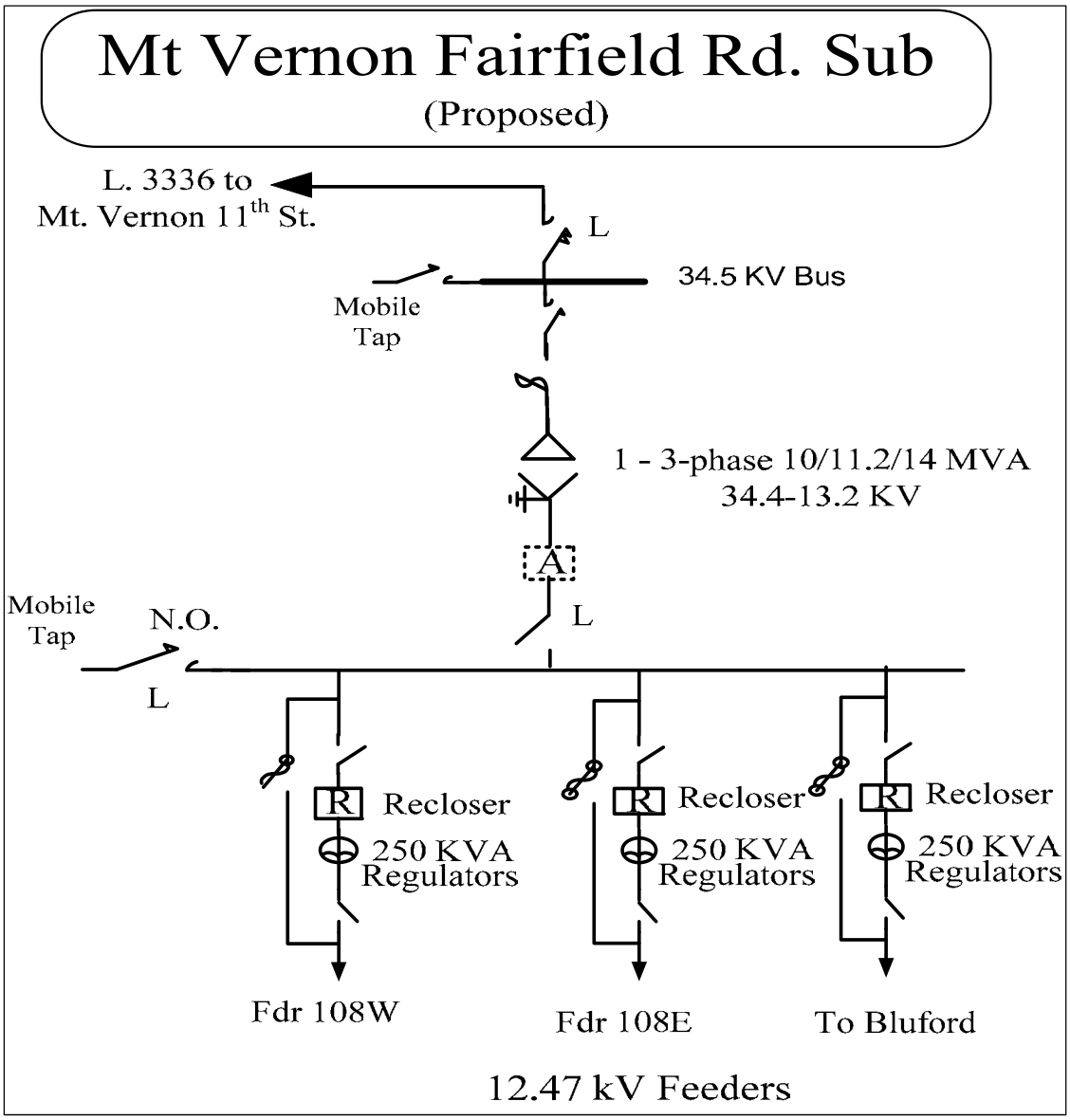
Mt Vernon Fairfield Rd. Sub
(Proposed)
L. 3336 to
Mt. Vernon 11th St.
L
34.5 KV Bus
Mobile
Tap
1 - 3-phase 10/11.2/14 MVA
34.4-13.2 KV
A
L
Mobile
Tap
N.O.
L
R
Recloser
250 KVA
Regulators
R
Recloser
250 KVA
Regulators
R
Recloser
250 KVA
Regulators
Fdr 108W
Fdr 108E
To Bluford
12.47 kV Feeders

# Appendices

## Distribution Substation Transformer Reserve Criteria:

The design and configuration of distribution substations as well as distribution circuit feeder reserve capabilities impacts the overall reliability of service to the customer. This section establishes distribution substation and transformer reserve criteria with the goal of minimizing the length of outages by providing system reserve capabilities.

Distribution substation supply reliability and transformer reserve requirements:

a) Substation load ≤ 10 MVA (or 2,500 customers)

   i) Objective: serve peak load and limit outage to less than 24 hours

   ii) Rely on mobile substation, in-station reserve and/or circuit ties operating within emergency limits

   iii) If new substation or major rebuild of existing substation, limit outage to no more than 12 hours (i.e., make the sub mobile ready)

b) Substation load > 10 MVA (or > 2,500 customers)

   i) Objective: serve peak load and limit outage to less than 4 hours [e.g., avoid extended outage due to transformer failure or cold load pickup issues]

   ii) Rely on in-station transformer reserve plus circuit ties operating within emergency limits

c) Supply line to single supplied substation or substations (i.e., single radial supply line to one or more substations) > 40 MVA total (or > 10,000 customers)

   i) Objective: limit outage to less than 3 hours by options to switch to alternate source.

   ii) 100% reserve supply or network line required operating within emergency limits.

## Area Load and Substation Capacity:

Table below shows the distribution substations in the study area with their load and transformer ratings. Approximately 4 MW of 4.16 KV load is expected to move out of downtown Mt Vernon in the next 2 years due to some businesses relocating to REA territory (i.e., Good Samaritan Inn, a High School, National Guard Armory, etc.). Additional business and restaurants are also expected to follow suites. The potential growth is outside of the downtown area.

| Substation | Voltage (KV) | Capacity (MVA) | 2012 Load (MVA) |
|---|---|---|---|
| Mt Vernon 11th St. #1 | 34/4 | 10.5 | 6.8 |
| Mt Vernon 11th St. #2 | 34/4 | 10.5 | 6.1 |
| Mt Vernon 11th St. #4 | 34/12 | 7 | 6.2 |
| Gaskin St. #1 | 34/4 | 5.25 | 3.3 |
| Gaskin St. #2 | 34/12 | 8.4 | 7.7 |
| Car Shops | 34/4 | 5.6 | 1.2 |
| Brownsville Rd | 34/12 | 10.5 | 7.2 |
| Mt Vernon 27th St. #1 | 34/12 | 22.4 | 10.1 |
| Mt Vernon 27th St. #2 | 34/12 | 22.4 | 10.4 |
| Bluford | 34/12 | 2.5 | 2.0 |
| Proposed Sub (Fairfield) | 34/12 | 14 | 8.2 |

## Customer Counts:

The following table shows the number of customers served by each feeder.

| Transformer/ Feeder | KV | Number of Customers |
|---|---|---|
| Mt. Vernon 11th St. Trf. # 1 | 4.16 | |
| P57-102 | | 633 |
| P57-103 | | 203 |
| P57-104 | | 370 |
| Mt. Vernon 11th St. Trf. # 2 | 4.16 | |
| P57-101 | | 321 |
| P57-105 | | 93 |
| P57-106 | | 116 |
| Mt. Vernon 11th St. Trf. # 4 | 12.47 | |
| P57-107 | | 173 |
| P57-108 | | 1337 |
| MTV Gaskin St. Trf. #1 | 4.16 | |
| P62-112 | | 416 |
| P62-113 | | 438 |
| MTV Gaskin St. Trf. #2 | 12.47 | |
| P62-138 | | 1546 |
| MTV Car Shops Trf. #1 | 4.16 | |
| P61-110 | | 51 |
| P61-111 | | 314 |
| Bluford Trf. #1 | 12.47 | |
| J74-125 | | 502 |

## Cost Estimate Summary:

| **Recommended Projects** | **Substation Cost $** | **Feeder Cost $** |
|---|---|---|
| A: Rebuild Mt Vernon 11th St. Sub with five 34.5 KV terminals and one 34.5/4.16KV, 14 MVA trf. | | 30,000 |
| B: Upgrade the 34.5/4.16 KV trf at Gaskin St. with a 10.5 MVA trf removed from 11th St. Sub. | | 0 |
| C: Remove Hendrix and build 4.16 KV feeder ties between 11th St., Gaskin St., and Car Shops Subs. | 0 | 75,000 |
| D: Build a new 34.5/12.47 KV substation (Fairfield Rd) on a new site. | | 75,000 |
| E: Build a 12.47KV feeder tie between Fairfield Rd Sub Ckt. 108 and Gaskin St. Ckt. 112 | 0 | 500,000 |
| F: Reconductor approx. 1 mile of Line 3336 | 0 | 350,000 |
| G: Retire Bluford substation and feed load from Fairfield Rd Sub | 0 | 50,000 |
| H: Retire a section of Line 3336. | 0 | 100,000 |
| I: Add fans to Gaskin St. Trf. #2. | | 0 |
| **Total** | | **1,180,000** |

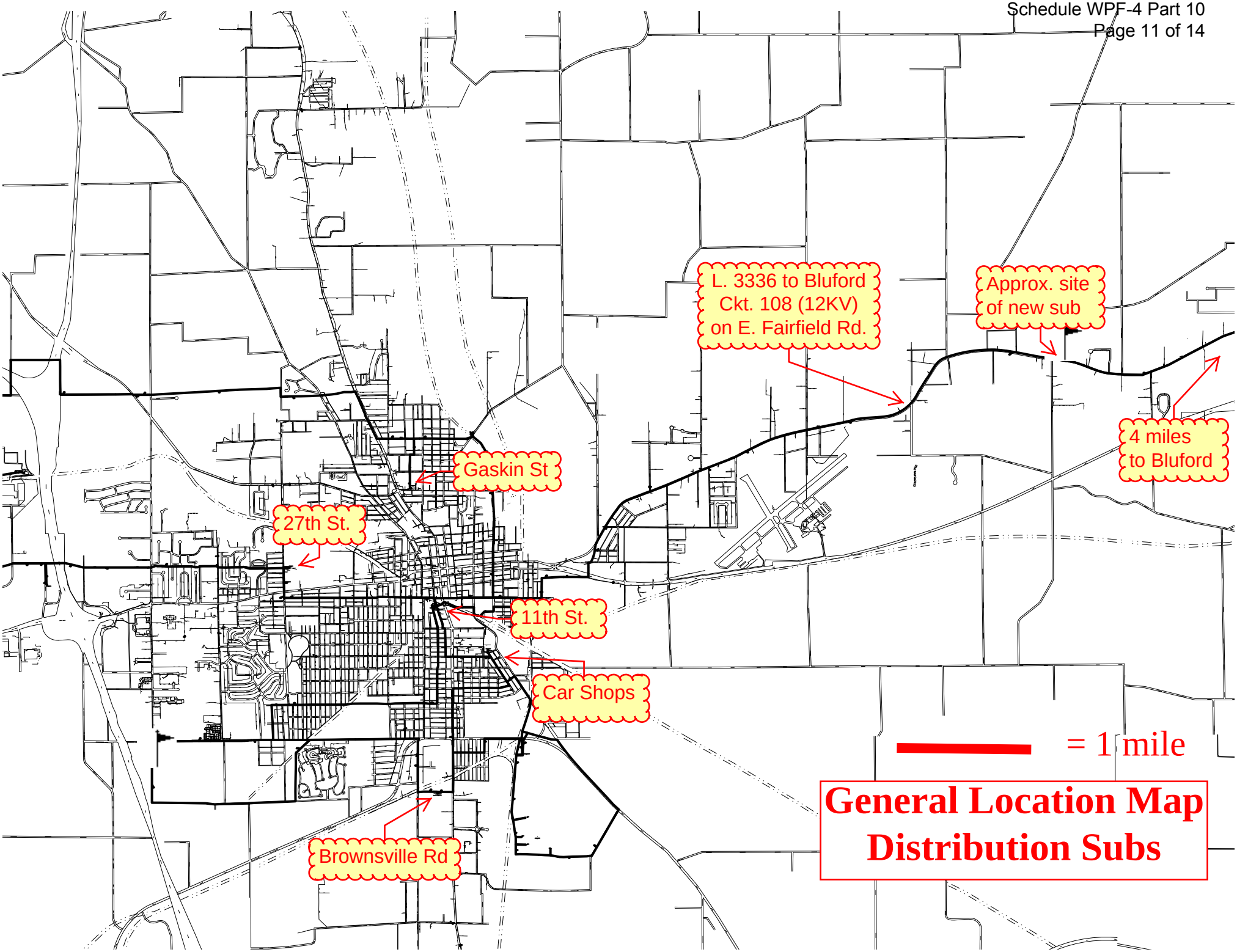
L. 3336 to Bluford
Ckt. 108 (12KV)
on E. Fairfield Rd.
Approx. site
of new sub
4 miles
to Bluford
Gaskin St
27th St.
11th St.
Car Shops
Brownsville Rd
= 1 mile
General Location Map
Distribution Subs

# Simplified System Diagram

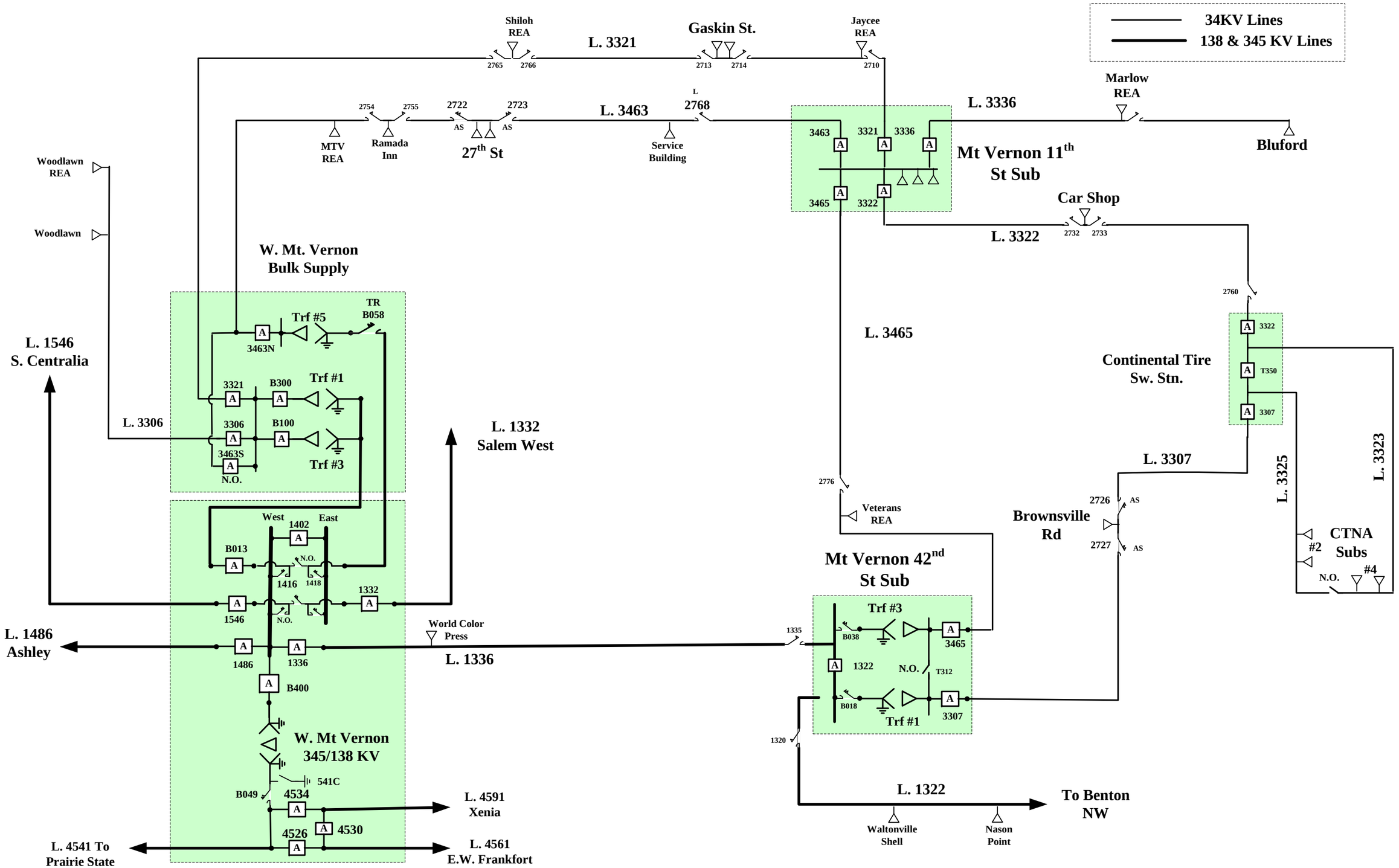

# Bluford Substation

# Bluford Substation