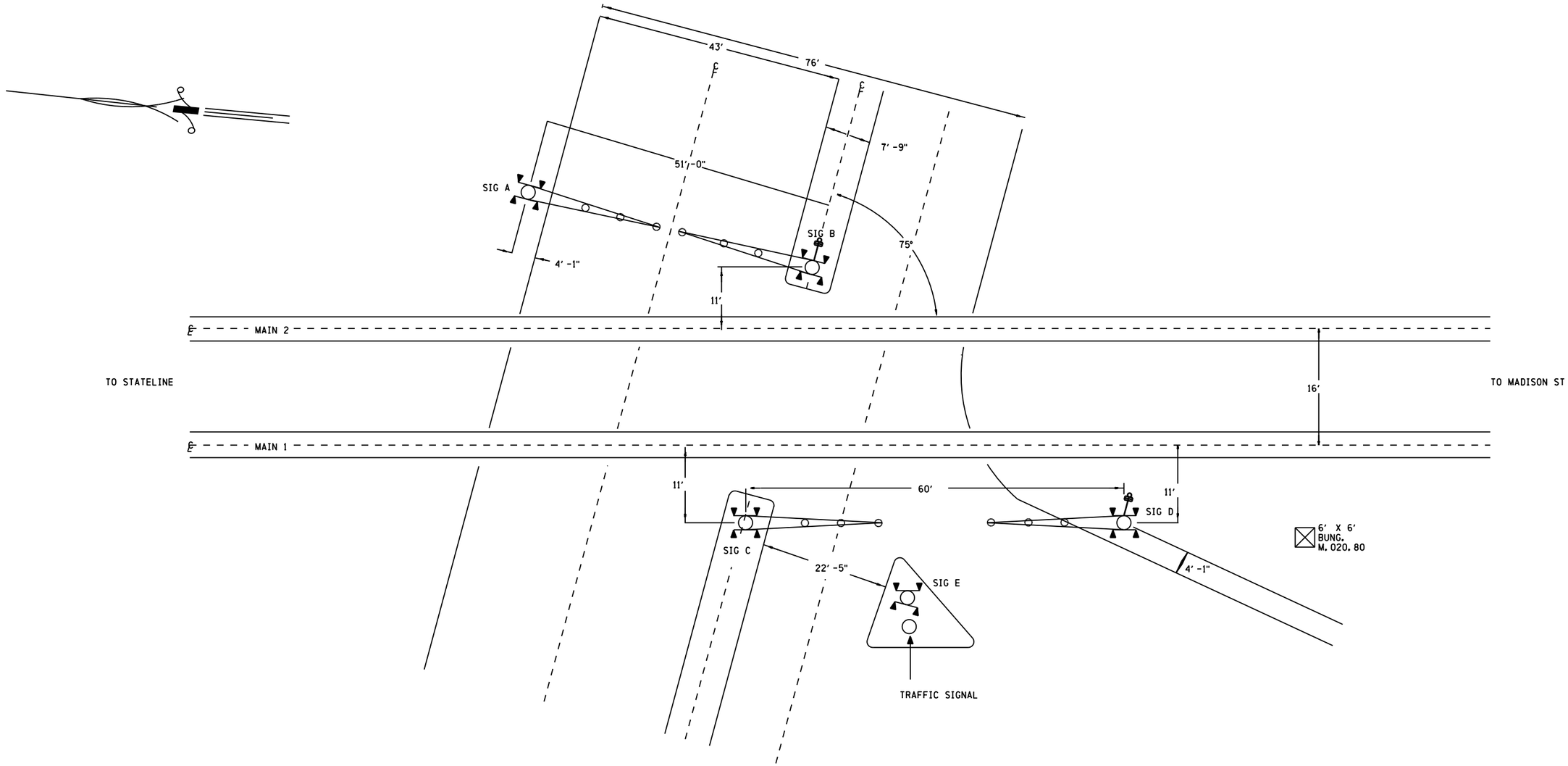

NOTES
1) 40 MPH DESIGN SPEED
2) 55 FEET MAXIMUM CLEARANCE DISTANCE
3) 120 FEET ISLAND DISTANCE - MAIN 1 & MAIN 2
4) CONSTANT WARNING CONTROL
5) APPROACH CIRCUIT DISTANCE PROVIDES FOR:
   2 SEC CLEARANCE TIME
   26 SEC PREEMPTION TIME (0 SEC ADVANCE TIME)
   26 SEC MINIMUM WARNING TIME
   5 SEC GATE DESCENT DELAY
   10 SEC BUFFER TIME
   5 SEC EQUIPMENT REACTION TIME
6) 24 FEET SIG A GATE ARM LENGTH
   24 FEET SIG B GATE ARM LENGTH
   24 FEET SIG C GATE ARM LENGTH
   24 FEET SIG D GATE ARM LENGTH
   24 FEET SIG E GATE ARM LENGTH

FIELD TO VERIFY ALL DIMENSIONS

TO BE CONFIRMED

CONFIRMED
DATE _____
BY _____
(PRINT NAME)

PROPOSED D	PROPOSED M	PROPOSED Y	REVISIONS	D	C	COMPLETED D	COMPLETED M	COMPLETED Y	C
			REV. PER FIELD			26	03	96	PAM
09	05	03	MODIFY CROSSING			11	05	06	WL
14	09	07	ADDED XP4	GET	GET	14	09	07	GET
			FIELD CHECK			26	02	15	TPF

REGION SOUTHERN
SUB. WAUKESHA 435
CN

SIGNALS AND COMMUNICATIONS EDMONTON
DES. PAM
6 NOVEMBER 1995
CH. FAP

SITUATION SKETCH

DES PLAINES, IL
TOUHY AVE

WAU-020. 80-0

DOT# 689 651T

12

REVISIONS				
NO.	DATE	BY	DESCRIPTION	APP. BY
1				
2				
3				
4				
5				

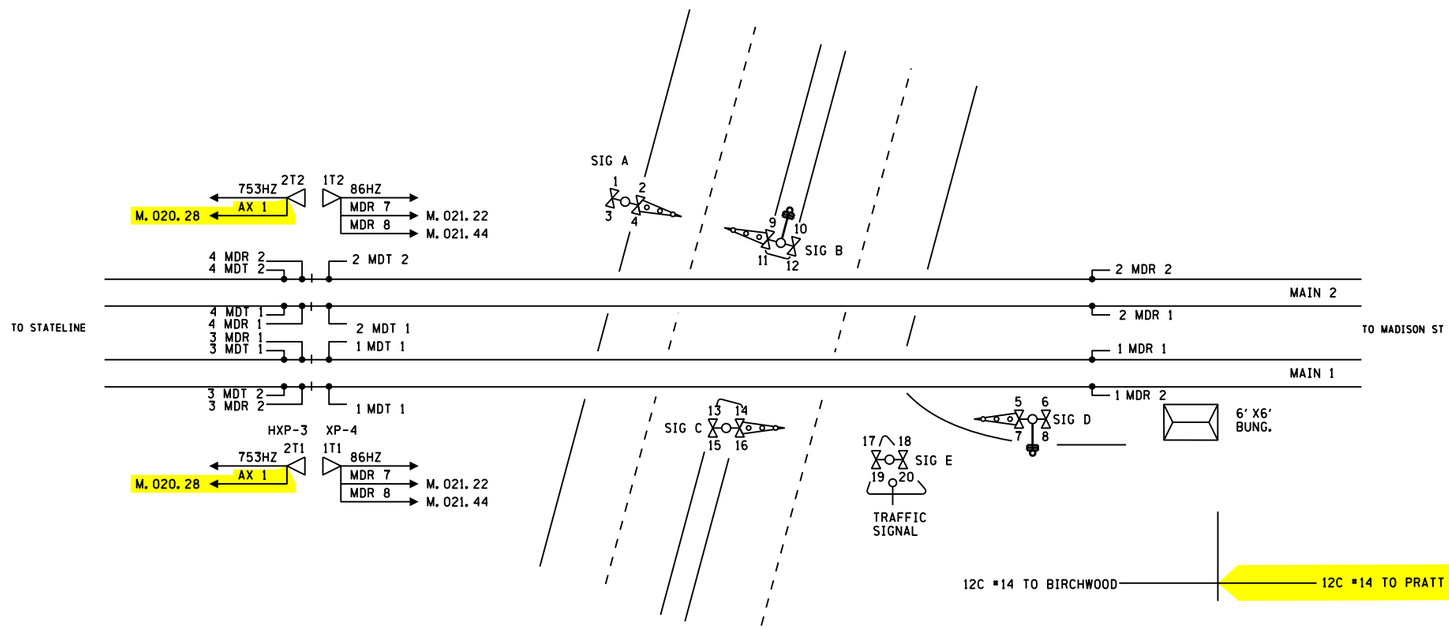

INTERCONNECT WITH TRAFFIC SIGNALS
SIMULTANEOUS 26 SEC MINIMUM PRE-EMPTION TIME
TO CITY TRAFFIC PRE - EMPT

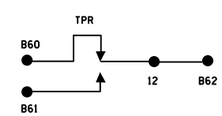

FLASHING LIGHT UNITS ALIGNMENT TABLE

PRIMARY FRONT LIGHTS FOR VEHICLES

SIG #	LIGHT #	ROUNDEL SIZE	ROUNDEL TYPE	ROAD SPEED MPH	MINIMUM DISTANCE FT	RECOMMENDED DISTANCE FT	ALIGNMENT DISTANCE FT
A	1,2	12"	LED	40	390	650	
B	9,10	12"	LED	40	390	650	
C	15,16	12"	LED	40	390	650	
D	7,8	12"	LED	40	390	650	
E	17,18	12"	LED	40	390	650	

BACK LIGHTS FOR VEHICLES

SIG #	LIGHT #	ROUNDEL SIZE	ROUNDEL TYPE	ROAD SPEED MPH	MINIMUM DISTANCE FT	RECOMMENDED DISTANCE FT	ALIGNMENT DISTANCE FT
A	3,4	12"	LED	N/A	N/A	N/A	50
B	11,12	12"	LED	N/A	N/A	N/A	50
C	13,14	12"	LED	N/A	N/A	N/A	50
D	5,6	12"	LED	N/A	N/A	N/A	50

NOTE
FIELD IS TO PROVIDE THE ACTUAL ALIGNMENT DISTANCE AS DETERMINED BY
SCP-706: ROAD CROSSING DEVICE LIGHT UNIT ALIGNMENT PROCEDURES

SII 21 JAN 2015

PROPOSED
DESIGN NO. 15-0066
RED-IN YELLOW-OUT

AS INSTALLED
DATE _____
BY _____
(PRINT NAME)

TO BE CONFIRMED

CONFIRMED
DATE _____
BY _____
(PRINT NAME)

PROPOSED D	PROPOSED M	PROPOSED Y	REVISIONS	D	C	COMPLETED D	COMPLETED M	COMPLETED Y	C
09	05	03	MODIFY XING	LAS		11	05	06	WL
15	02	05	REPLACE HD LINK	LAS		11	05	06	WL
14	09	07	ADDED XP4	GET	GET	14	09	07	GET
			FIELD CHECK			02	03	15	TPF
21	01	15	PRATT 40MPH REV	NAD	MRB				

REGION SOUTHERN
SUB. WAUKESHA 435
SIGNALS AND COMMUNICATIONS EDMONTON
06 NOVEMBER 1995
DES. MAJ
CH. FAP
TRACK LAYOUT
DES PLAINES, IL
TOUHY AVE
WAU-020.80-01
DOT# 689 651T

SIEMENS INDUSTRY INC
DES. : NAD
CKD. : MRB
DRN. : NAD
P TIME:14:23
DATE: 21/01/15
ISSUE DATE: N/A
PLAN NO. :N/A
P DATE: $$PLOT_DATE
JOB NO. :PWCA10408
EST. NO. :XP-7628
SHEET 1 OF 11
CAD ID. :WAU-020.80-01

SIEMENS INDUSTRY INC
LOUISVILLE DIVISION, LOUISVILLE, KY

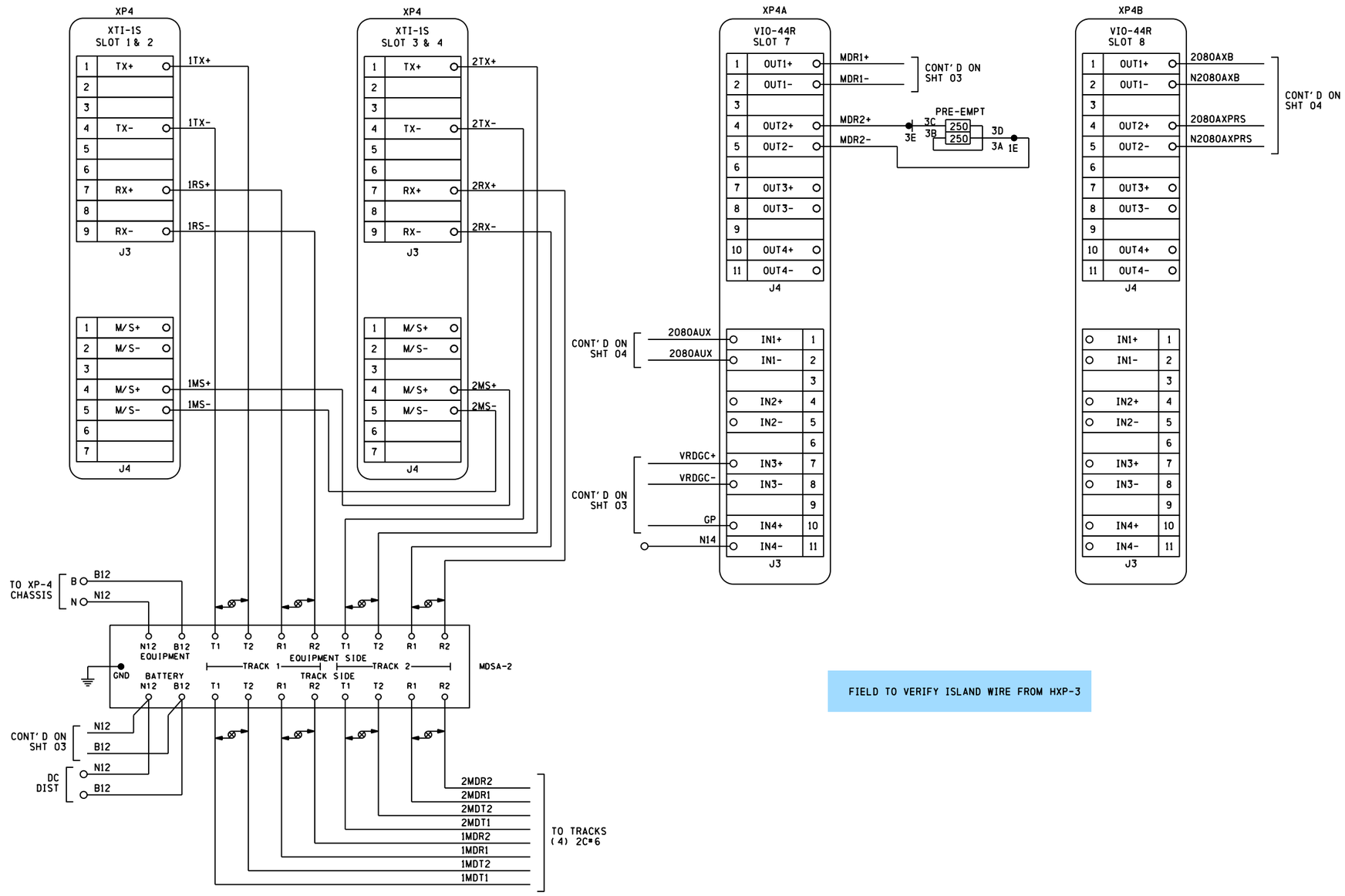

FIELD TO VERIFY ISLAND WIRE FROM HXP-3

NOTES

DENOTES TWISTED PAIR

REVISIONS				
NO.	DATE	BY	DESCRIPTION	APP. BY
1				
2				
3				
4				
5				

SIEMENS INDUSTRY INC			
DES. : NAD	DATE: 21/01/15	JOB NO.: PWCA10408	
CKD. : MRB	ISSUE DATE: N/A	EST. NO.: XP-7628	
DRN. : NAD	PLAN NO.: N/A	SHEET 2 OF 11	
P. TIME: 14:23	P. DATE: $$PLOT_DATE	CAD ID.: WAU-020.80-02	

PROPOSED D	M	Y	REVISIONS	D	C	COMPLETED D	M	Y	C
09	05	03	MODIFY XING	LAS		11	05	06	WL
15	02	05	REPLACE HD LINK	LAS		11	05	06	WL
14	09	07	ADDED XP4	GET	GET	14	09	07	GET
			FIELD CHECK			02	03	15	TPF

TO BE CONFIRMED

CONFIRMED

DATE _____

BY _____

(PRINT NAME)

REGION SOUTHERN

SUB. WAUKESHA 435

SIGNALS AND COMMUNICATIONS EDMONTON

DES. MAJ

06 NOVEMBER 1995

CH. FAP

ELECTROLOGIXS XP4
TRACK 1 & 2 & VIO MODULES
DES PLAINES, IL

TOUHY AVE

WAU-020.80-02

DOT#689 651T

SIEMENS INDUSTRY INC
LOUISVILLE DIVISION, LOUISVILLE, KY

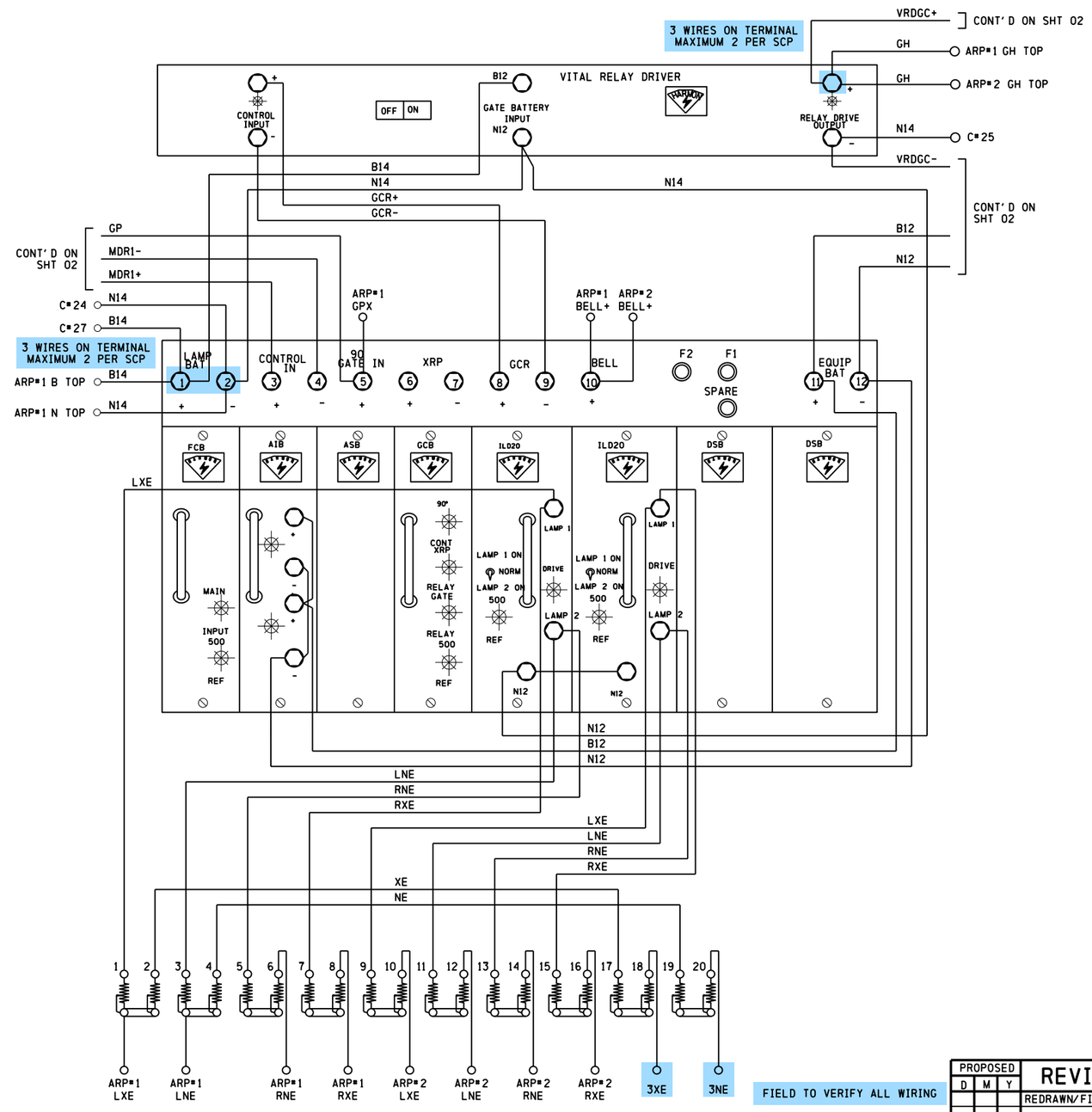

FIELD TO VERIFY ALL WIRING

NOTE:
ALL WIRE THIS SHEET #10AWG
UNLESS OTHERWISE NOTED.

TO BE CONFIRMED

CONFIRMED
DATE
BY
(PRINT NAME)

PROPOSED D	M	Y	REVISIONS	D	C	COMPLETED D	M	Y	C
			REDRAWN/FIELD CHECK			02	03	15	TPF

REGION SOUTHERN
SUB. WAUKESHA 435

SIGNALS AND COMMUNICATIONS HOMEWOOD
06 NOVEMBER 1995
DES. PAM
CH. FAP

CROSSING CONTROLLER CIRCUITS
DES PLAINES, IL
TOUHY AVE

WAU-020.80-03

DOT#689 651T

REVISIONS

NO.	DATE	BY	DESCRIPTION	APP. BY
1				
2				
3				
4				
5				

SIEMENS INDUSTRY INC

DES.: NAD	DATE: 21/01/15	JOB NO.: PWCA10408
CKD.: MRB	ISSUE DATE: N/A	EST. NO.: XP-7628
DRN.: NAD	PLAN NO.: N/A	SHEET 3 OF 11
P TIME: 14:23	P DATE: $$PLOT_DATE	CAD ID.: WAU-020.80-03

SIEMENS INDUSTRY INC
LOUISVILLE DIVISION, LOUISVILLE, KY

wau-020.80-03.dgn
06-MAY-2015

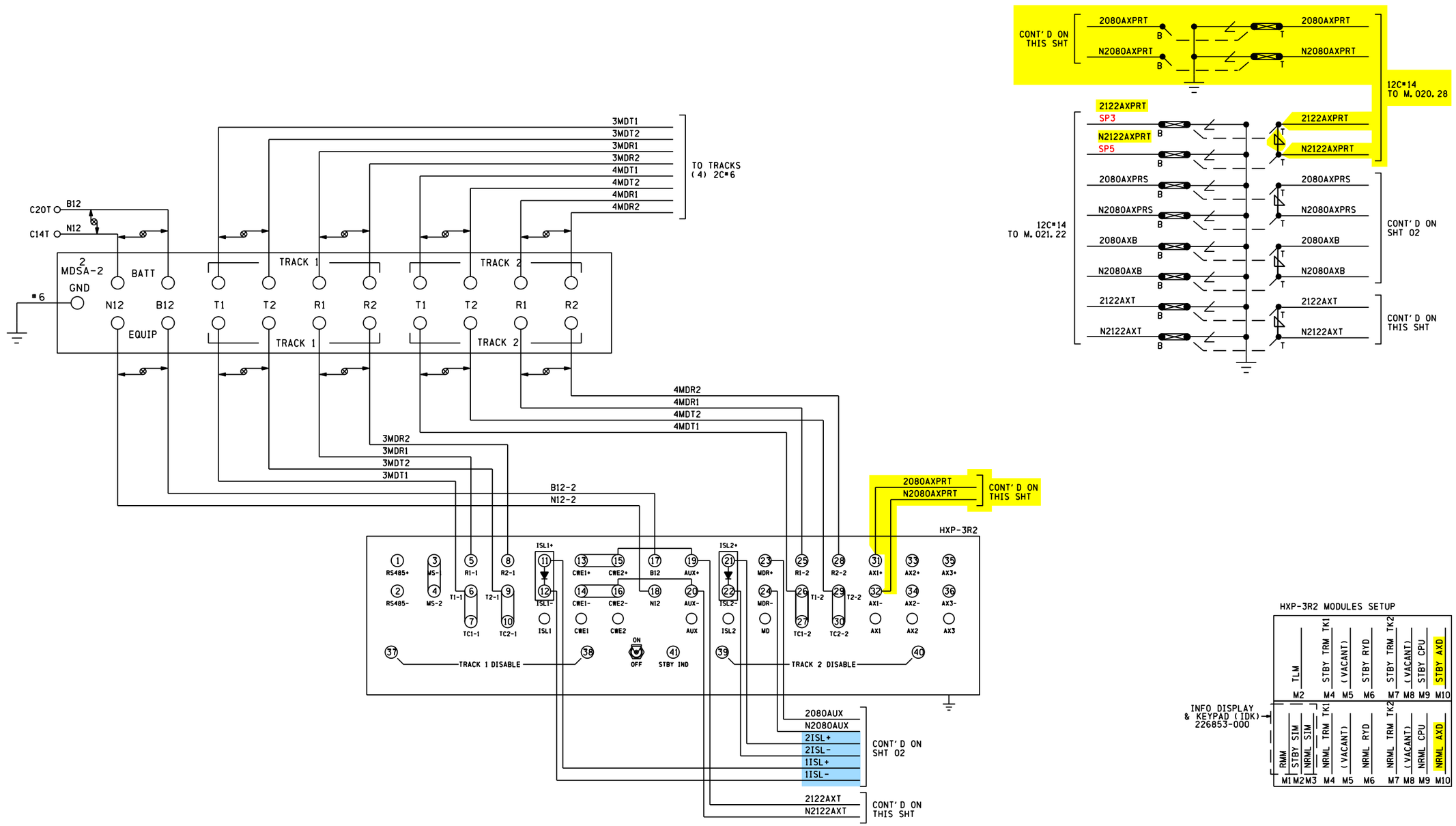

NOTES
1) CIRCUITS TO BE #16 AWG UNLESS OTHERWISE NOTED

DENOTES TWISTED PAIR

SII 21 JAN 2015

PROPOSED
DESIGN NO. 15-0066
RED-IN YELLOW-OUT

AS INSTALLED
DATE
BY
(PRINT NAME)

FIELD TO VERIFY ISLAND WIRING

TO BE CONFIRMED

CONFIRMED
DATE
BY
(PRINT NAME)

PROPOSED D	M	Y	REVISIONS	D	C	COMPLETED D	M	Y	C
			REDRAWN/FIELD CHECK			02	03	15	TPF
21	01	15	PRATT 40MPH REV	NAD	MRB				

REGION SOUTHERN
SUB. WAUKESHA 435

SIGNALS AND COMMUNICATIONS HOMEWOOD
DES. GET
20 NOVEMBER 2002
CH. FAP
HXP-3 CONTROL CIRCUITS
DES PLAINES, IL
TOUHY AVE
WAU-020.80-04
DOT#689 651T

SIEMENS INDUSTRY INC
LOUISVILLE DIVISION, LOUISVILLE, KY

SIEMENS INDUSTRY INC
DES.: NAD DATE: 21/01/15 JOB NO.: PWCA10408
CKD.: MRB ISSUE DATE: N/A EST. NO.: XP-7628
DRN.: NAD PLAN NO.: N/A SHEET 4 OF 11
P. TIME: 14:23 P. DATE: $$PLOT_DATE CAD ID.: WAU-020.80-04

NO.	DATE	BY	DESCRIPTION	APP. BY
1				
2				
3				
4				
5				

REVISIONS

wau-020.80-04.dgn
06-MAY-2015

XP4 SETUP

PROGRAM NAME	TOUHY	CABINET ID	0000	CHECKSUM	16CB	CRC	7775

MDR SETUP						
MDR *		MDR1		MDR7		MDR8
WARNING TIME		37		36		36
CW/ MD		CW		CW		CW
CWE-WT		80		NA		NA
AUX RECVR DLY		0		NA		NA
TRACK *		TK1	TK2	TK1	TK2	TK1	TK2
TRACK ASSIGNED		ASSIGNED	ASSIGNED	ASSIGNED	ASSIGNED	ASSIGNED	ASSIGNED
OFFSET DISTANCE		0	0	2056	2056	3182	3182
MD RESTART		0	0	0	0	0	0
SUDDEN SHUNT ZONE		DISABLED	DISABLED	DISABLED	DISABLED	DISABLED	DISABLED
POSITIVE START	PSEN	DISABLED	DISABLED	DISABLED	DISABLED	DISABLED	DISABLED
	PSRX	0	0	0	0	0	0
	PST	0	0	0	0	0	0
POST JOINT DETECT	PJEN	ENABLED	ENABLED	ENABLED	ENABLED	ENABLED	ENABLED
	PJRX	15	15	15	15	15	15
	PJDET	15	15	15	15	15	15

* FIELD ADJUSTMENT

INPUT OUTPUT MAP	
SLOT 7 VIO-44R	
SLOT 7 INPUT 1	AUX/MDR1
SLOT 7 INPUT 2	NOT USED
SLOT 7 INPUT 3	GC
SLOT 7 INPUT 4	GP
SLOT 7 OUTPUT 1	MDR1
SLOT 7 OUTPUT 2	MDR2
SLOT 7 OUTPUT 3	NOT USED
SLOT 7 OUTPUT 4	NOT USED

INPUT OUTPUT MAP	
SLOT 8 VIO-44R	
SLOT 8 INPUT 1	NOT USED
SLOT 8 INPUT 2	NOT USED
SLOT 8 INPUT 3	NOT USED
SLOT 8 INPUT 4	NOT USED
SLOT 8 OUTPUT 1	MDR7
SLOT 8 OUTPUT 2	MDR8
SLOT 8 OUTPUT 3	NOT USED
SLOT 8 OUTPUT 4	NOT USED

TRACK SETUP			
BASIC SETUP		TRACK 1	TRACK 2
FREQUENCY		86 HZ	86 HZ
MASTER/ SLAVE		MASTER	SLAVE
TCA (TRANSMITTER CHECK)		*	*
DIRECTION MODE		BI	BI
LIA (LUMPED IMPEDANCE)		*	*
NBS COMP RX		*	*
AUTO RX		*	*
APPROACH LENGTH		4410 FT	4410 FT
ADVANCED SETUP		TRACK 1	TRACK 2
MOTION DET TIMER	MDEN	DISABLED	DISABLED
	MDTT	NA	NA
FALSE SHUNT TIMER	FSEN	DISABLED	DISABLED
	FSRX	NA	NA
	FST	NA	NA
APPROACH RELEASE TIMER	AREN	DISABLED	DISABLED
	ARRX	NA	NA
	ART	NA	NA
LOSS OF SHUNT TIMER		30	30
IJ-LOS TIMER		5	5
MAINTENANCE MENU		TRACK 1	TRACK 2
ENABLE/ DISABLE		ENABLED	ENABLED
DISABLE TIMEOUT		NA	NA
BALLAST COMP		*	*
PHASE COMP		*	*

* FIELD ADJUSTMENT

ISLAND SETUP		
TRACK *	TRACK 1	TRACK 2
ENABLE/DISABLE	ENABLED	ENABLED
FREQUENCY	4.0 KHZ	4.0 KHZ
LOSS OF SHUNT	2	2
FAULT DELAY	1	1

MODULE LIST								
XTI-1S (TK1 NORMAL)	XTI-1S (TK1 NORMAL)	XTI-1S (TK2 NORMAL)	XTI-1S (TK2 STANDBY)	(EMPTY)	(EMPTY)	VIO-44R (NORM/STBY)	VIO-44R (NORM/STBY)	(EMPTY)
1	2	3	4	5	6	7	8	9
CPS-2	NSM-1	VPM-2+	CIO-1A					

REVISIONS											
PROPOSED D	M	Y	REVISIONS	D	C	COMPLETED D	M	Y	C
09	05	03	MODIFY XING	LAS		11	05	06	WL
15	02	05	REPLACE HD LINK	LAS		11	05	06	WL
14	09	07	ADDED XP4	GET	GET	14	09	07	GET

REGION SOUTHERN

SUB. WAUKESHA 435

SIGNALS AND COMMUNICATIONS HOMEWOOD

DES. MAJ

06 NOVEMBER 1995

CH. FAP

ELECTROLOGIXS XP4
PROGRAM INFORMATION
DES PLAINES, IL

TOUHY AVE

WAU-020.80-05

DOT#689 651T

REVISIONS			
NO.	DATE	BY	DESCRIPTION	APP. BY
1				
2				
3				
4				
5				

SIEMENS INDUSTRY INC

DES.: NAD	DATE: 21/01/15	JOB NO.: PWCA10408	
CKD.: MRB	ISSUE DATE: N/A	EST. NO.: XP-7628	
DRN.: NAD	PLAN NO.: N/A	SHEET 5 OF 11	
P TIME: 14:23	P DATE: $$PLOT_DATE	CAD ID.: WAU-020.80-05	

wau-020.80-05.dgn
06-MAY-2015

SIEMENS INDUSTRY INC
LOUISVILLE DIVISION, LOUISVILLE, KY

REVISIONS			
NO.	DATE	BY	DESCRIPTION	APP. BY
1				
2				
3				
4				
5				

Grade Crossing Location Record

Cabinet Number (Option 90) _____

Location TOUHY AVE Milepost 020.80 DOT 689651T Date -- / -- / --

Operating Program HPN 202447-000 Version 4.01

System Monitor Program HPN 202444-002 Version 20.3

Hardware Settings

Track 1 Master ■ Slave ☐ 4 kHz ☐ 8 kHz ☐
LOS jumper 0 ■ 1 ☐ 2 ☐ Fault jumper 0 ■ 1 ☐
Approach configuration switch position: Normal ■ Short ☐ Very Short ☐

Track 2 Master ☐ Slave ■ 4 kHz ☐ 8 kHz ☐
LOS jumper 0 ■ 1 ☐ 2 ☐ Fault jumper 0 ■ 1 ☐
Approach configuration switch position: Normal ■ Short ☐ Very Short ☐

Adjust Select Adjustments

No.	Adjustment	Default	Range	Track 1	Track 2
1	Approach Length	9,999	0 - 9,999	1036 feet	1036 feet
2	Warning Time	99	23 - 99	37 seconds	37 seconds
3	LIA	0	-9 to +9	steps	steps
4	TC (1 step = 32)	395	430 - 470	steps	steps
5	MD Restart	99%	0 - 99%	0 RX	0 RX

Option Adjustments

No.	Adjustment	Default	Range	Track 1	Track 2
0	RX	0	1-100		
1	TK-ENA	UP	UP or dn	UP ■ dn ☐	UP ■ dn ☐
2	TK FO	0	0 - 9999	753 Hz	753 Hz
3	CW/MD	d	C to d	C ■ d ☐	C ■ d ☐
4	UNI-BI	b	U - b	U ■ b ☐	U ■ b ☐
5	NBS-C	0	0 - 99	RX	RX
		9,999	RX dependant	feet	feet
6	CWEWT	80	0 - 99	80 seconds	80 seconds
7	LOS	16	4 - 99	30 seconds	30 seconds
8	IJ-LOS	5	3 - 99	5 seconds	5 seconds
9	BC	frequency dependant	50 -250		
10	P-COMP	0	0 - 10	degrees	degrees

HXP-3, HXP-3R, HXP-3R2

AX Adjustment Options

	Default	Range	Option 11 - AX1	Option 12 - AX2	Option 13 - AX3
TK-ASN		1, 2, Both	1 ☐ 2 ☐ Both ■	1 ☐ 2 ☐ Both ☐	1 ☐ 2 ☐ Both ☐
OF-TK1	0	0 - 9,999	N/A 2794 feet	feet	feet
OF-TK2	0	0 - 9,999	N/A 2794 feet	feet	feet
WT	99	23 - 99	N/A 36 seconds	seconds	seconds
MD-RST	99	0 - 99%	N/A 0 RX	RX	RX
CW/MD	d	C or d	C ■ d ☐	C ☐ d ☐	C ☐ d ☐
CJ-LOS	0	3 - 99	N/A 80 seconds	seconds	seconds
PJ-DET	15	4 - 15	N/A 15 seconds	seconds	seconds
POS-ST	dn	UP or dn	UP ☐ dn ■	UP ☐ dn ☐	UP ☐ dn ☐

No.	Adjustment	Default	Range	Track 1	Track 2
17	MDR-AX	n*	n or A	n ■ A ☐	n ■ A ☐
	OF-TK1	0	0 - 9,999	feet	
	OF-TK2	0	0 - 9,999		feet
	CJ-LOS	0	3 - 99	seconds	seconds
	PJ-DET	15	4 - 15	seconds	seconds
18	MD-TMR	10	10-99 (0=disable)	minutes	minutes
19	MIN-WT	0	23-99 (0=disable)	seconds	seconds
20	FS-DET	0	10-30 (0=disable)	minutes	minutes
21	POS-RX	0	0 - 74 (0=disable)	RX	RX
	POS-TM	0	0 - 99**	minutes	minutes
22	AR-TMR	0	0-80 (0=disable)	minutes	minutes
47	ATO-RX	dn	UP or dn	UP ■ dn ☐	UP ■ dn ☐
48	PF-ENA	UP	UP or dn	UP ■ dn ☐	UP ■ dn ☐

*n = not an AX drive (no options available)
**0 = disable, 99 = continuous

Shunt Record

West Approach		No Shunt RX	No Shunt Phase	100% Shunt RX	100% Shunt Phase	50% Shunt	50% Shunt RX	50% Shunt Phase	LIA Added % 1 to 9
Track 1	Normal								
	Standby								
Track 2	Normal								
	Standby								
East Approach									
Track 1	Normal								
	Standby								
Track 2	Normal								
	Standby								

SII 21 JAN 2015

PROPOSED
DESIGN NO. 15-0066
RED-IN YELLOW-OUT

AS INSTALLED
DATE _____
BY _____
(PRINT NAME)

PROPOSED D	M	Y	REVISIONS	D	C	COMPLETED D	M	Y	C
			REDRAWN/FIELD CHECK			02	03	15	TPF
21	01	15	PRATT 40MPH REV	NAD	MRB				

REGION SOUTHERN
SUB. WAUKESHA 435

SIGNALS AND COMMUNICATIONS HOMEWOOD
20 NOVEMBER 2002
DES. GET
CH. TAP

HXP-3 PROGRAM DATA

DES PLAINES, IL
TOUHY AVE

WAU-020.80-06
DOT# 689 651T

SIEMENS INDUSTRY INC
LOUISVILLE DIVISION, LOUISVILLE, KY

SIEMENS INDUSTRY INC
DES.: NAD DATE: 21/01/15 JOB NO.: PWCA10408
CKD.: MRB ISSUE DATE: N/A EST. NO.: XP-7628
DRN.: NAD PLAN NO.: N/A SHEET 6 OF 11
P. TIME: 14:23 P. DATE: $$PLOT_DATE CAD ID.: WAU-020.80-06

wau-020.80-06.dgn
06-MAY-2015

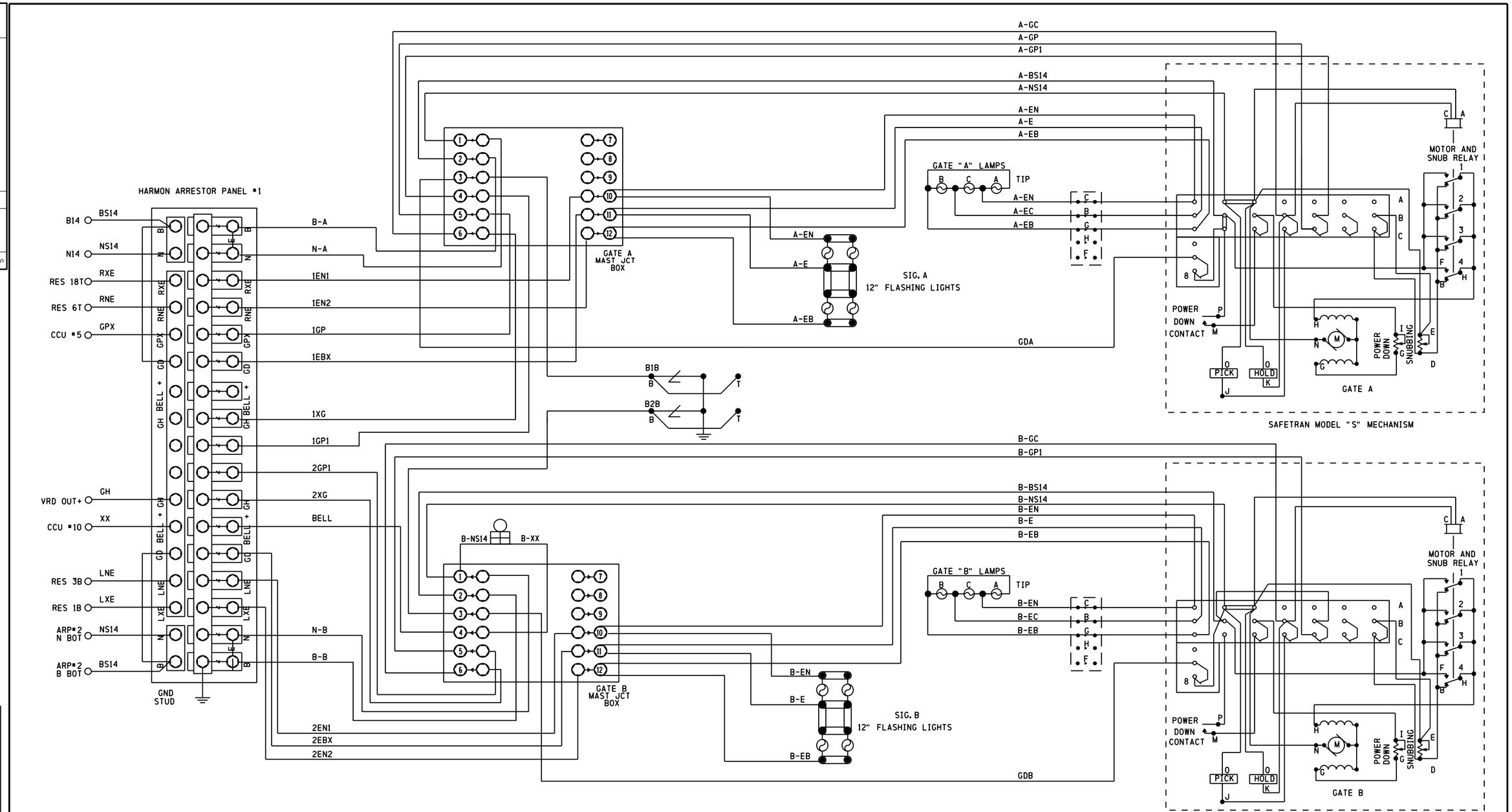

NOTES:

1. ALL WIRE THIS SHEET TO BE #10 AWG FLEX UNLESS OTHERWISE NOTED.

CONTACT	CLOSED	CONTACT FUNCTION
3	45° -90°	POWER DOWN
4	0° -89°	POWER UP
5	83° -90°	FLASHING LIGHT
6	5° -90°	BELL
7	0° -5°	MOTOR SNUB
8	0° -5°	GATE DOWN

FIELD TO VERIFY ALL WIRING

TO BE CONFIRMED

CONFIRMED

DATE _____

BY _____

(PRINT NAME)

REVISIONS

NO.	DATE	BY	DESCRIPTION	APP. BY
1				
2				
3				
4				
5				

PROPOSED D	M	Y	REVISIONS	D	C	COMPLETED D	M	Y	C
08	05	01	REV. PER FIELD			14	05	01	NRB
09	05	03	MODIFY CROSSING			11	05	06	WL
14	09	07	ADDED XP4			14	09	07	GET
			FIELD CHECK			02	03	15	TPF

REGION SOUTHERN

SUB. WAUKESHA 435

SIGNALS AND COMMUNICATIONS EDMONTON

30 MAY 1996

DES. PAM

CH. FAP

GATE MECHANISMS A & B
CONTROL CIRCUITS
DES PLAINES, IL

TOUHY AVE

WAU-020.80-07

DOT#689 651T

SIEMENS INDUSTRY INC

DES.: NAD | DATE: 21/01/15 | JOB NO.: PWCA10408

CKD.: MRB | ISSUE DATE: N/A | EST. NO.: XP-7628

DRN.: NAD | PLAN NO.: N/A | SHEET 7 OF 11

P TIME: 14:23 | P DATE: $$PLOT_DATE | CAD ID.: WAU-020.80-07

SIEMENS INDUSTRY INC
LOUISVILLE DIVISION, LOUISVILLE, KY

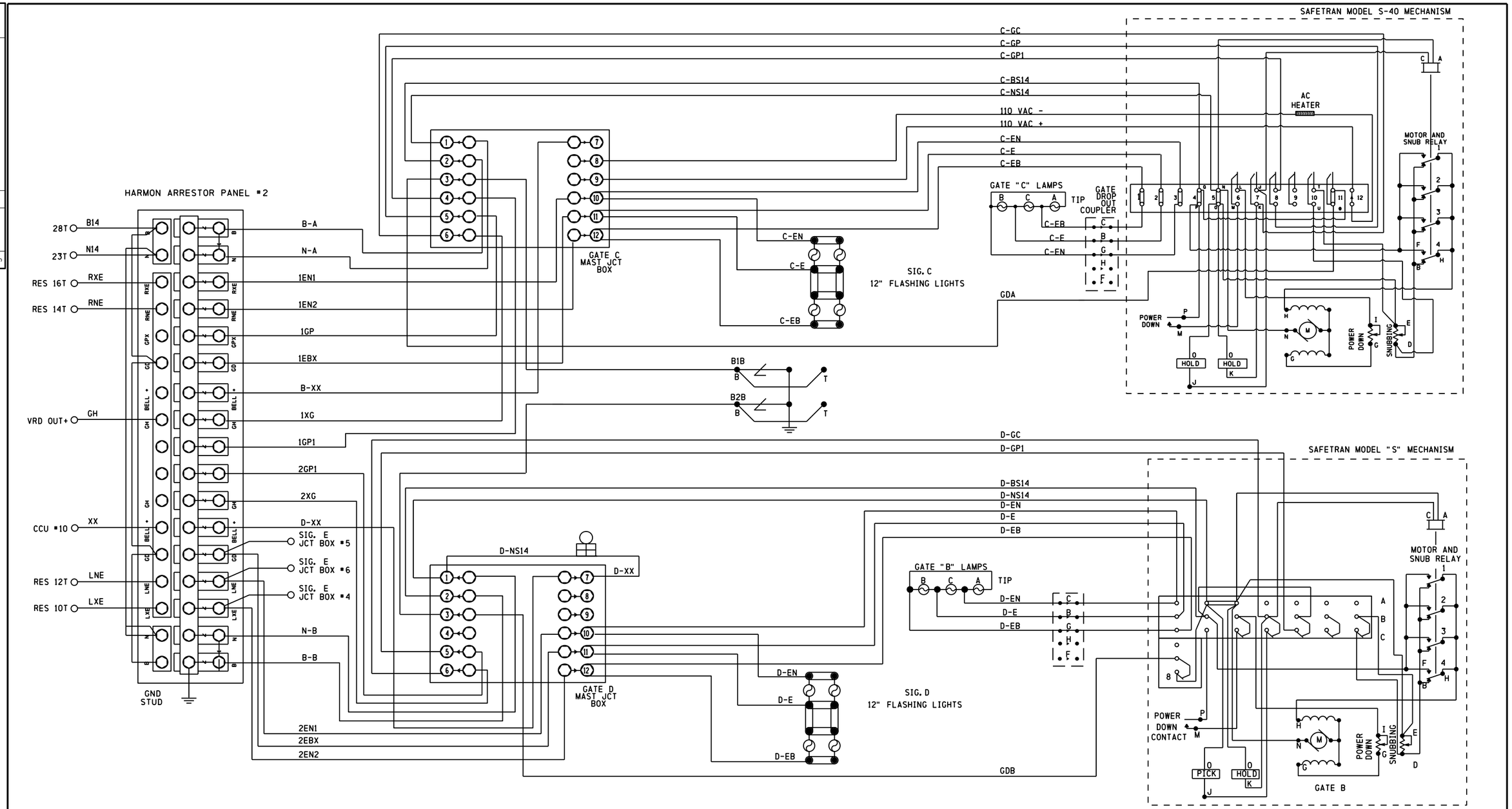

GATE C MODEL S-40		
CONTACT	CLOSED	CONTACT FUNCTION
6	45° -90°	POWER DOWN
7	0° -89°	POWER UP
8	83° -90°	FLASHING LIGHT
9	5° -90°	BELL
10	0° -5°	MOTOR SNUB
11	0°	GATE DOWN

GATE D MODEL S		
CONTACT	CLOSED	CONTACT FUNCTION
3	45° -90°	POWER DOWN
4	0° -89°	POWER UP
5	83° -90°	FLASHING LIGHT
6	5° -90°	BELL
7	0° -5°	MOTOR SNUB
8	0° -5°	GATE DOWN

NOTES:

1. ALL WIRE THIS SHEET TO BE #10 AWG FLEX UNLESS OTHERWISE NOTED.

FIELD TO VERIFY ALL WIRING

TO BE CONFIRMED

CONFIRMED

DATE _____

BY _____

(PRINT NAME)

REVISIONS										
PROPOSED				D	C	COMPLETED			C	
D	M	Y				D	M	Y		
08	05	01	REV. PER FIELD			14	05	01	NRB	
09	05	03	MODIFY CROSSING			11	05	06	WL	
14	09	07	ADDED XP4	GET	GET	14	09	07	GET	
			FIELD CHECK			02	03	15	TPF	

REGION SOUTHERN

SUB. WAUKESHA 435

SIGNALS AND COMMUNICATIONS EDMONTON

30 MAY 1996

DES. PAM

CH. FAP

GATE MECHANISM C & D
CONTROL CIRCUITS
DES PLAINES, IL

TOUHY AVE

WAU-020.80-08

DOT#689 651T

REVISIONS				
NO.	DATE	BY	DESCRIPTION	APP. BY
1				
2				
3				
4				
5				

SIEMENS INDUSTRY INC

DES. : NAD	DATE: 21/01/15	JOB NO. : PWCA10408	
CKD. : MRB	ISSUE DATE: N/A	EST. NO. : XP-7628	
DRN. : NAD	PLAN NO. :N/A	SHEET 8 OF 11	
P TIME:14:23	P DATE: $$PLOT_DATE	CAD ID. : WAU-020.80-08	

SIEMENS INDUSTRY INC
LOUISVILLE DIVISION, LOUISVILLE, KY

REVISIONS				
NO.	DATE	BY	DESCRIPTION	APP. BY
1				
2				
3				
4				
5				

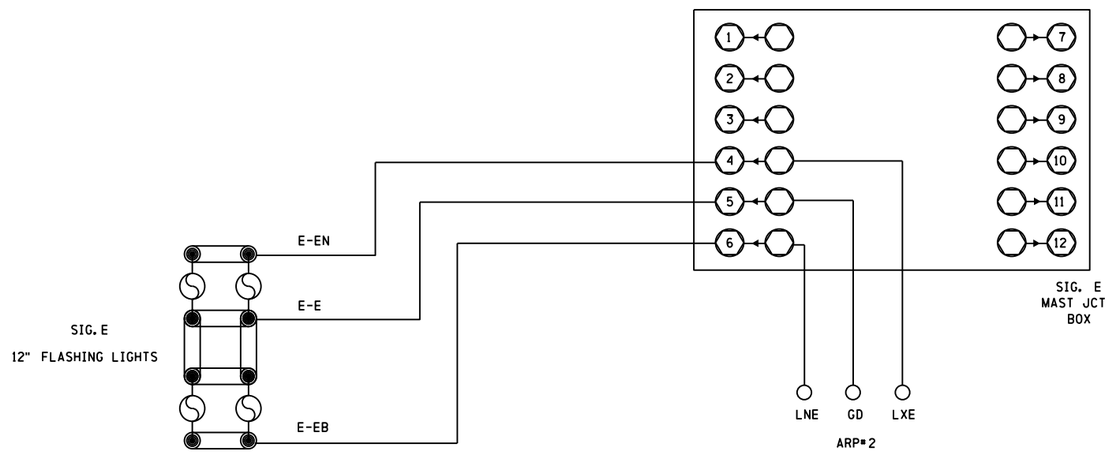

FIELD TO VERIFY ALL WIRING

TO BE CONFIRMED

CONFIRMED

DATE _____

BY _____

(PRINT NAME)

PROPOSED D	PROPOSED M	PROPOSED Y	REVISIONS	D	C	COMPLETED D	COMPLETED M	COMPLETED Y	C
08	05	01	REV. PER FIELD			14	05	01	NRB
09	05	03	MODIFY CROSSING			11	05	06	WL
14	09	07	ADDED XP4	GET	GET	14	09	07	GET
			FIELD CHECK			02	03	15	TPF

REGION SOUTHERN

SUB. WAUKESHA 435

CN

SIGNALS AND COMMUNICATIONS
EDMONTON

30 MAY 1996

DES. PAM

CH. FAP

SIGNAL E FLASHING LIGHT
CONTROL CIRCUITS
DES PLAINES, IL

TOUHY AVE

WAU-020.80-09

DOT#689 651T

SIEMENS INDUSTRY INC	
DES.: NAD	DATE: 21/01/15
CKD.: MRB	ISSUE DATE: N/A
DRN.: NAD	PLAN NO.: N/A
P TIME: 14:23	P DATE: $$PLOT_DATE
	JOB NO.: PWCA10408
	EST. NO.: XP-7628
	SHEET 9 OF 11
	CAD ID.: WAU-020.80-09

SIEMENS INDUSTRY INC
LOUISVILLE DIVISION, LOUISVILLE, KY

REVISIONS				
NO.	DATE	BY	DESCRIPTION	APP. BY
1				
2				
3				
4				
5				

SIDE "D"

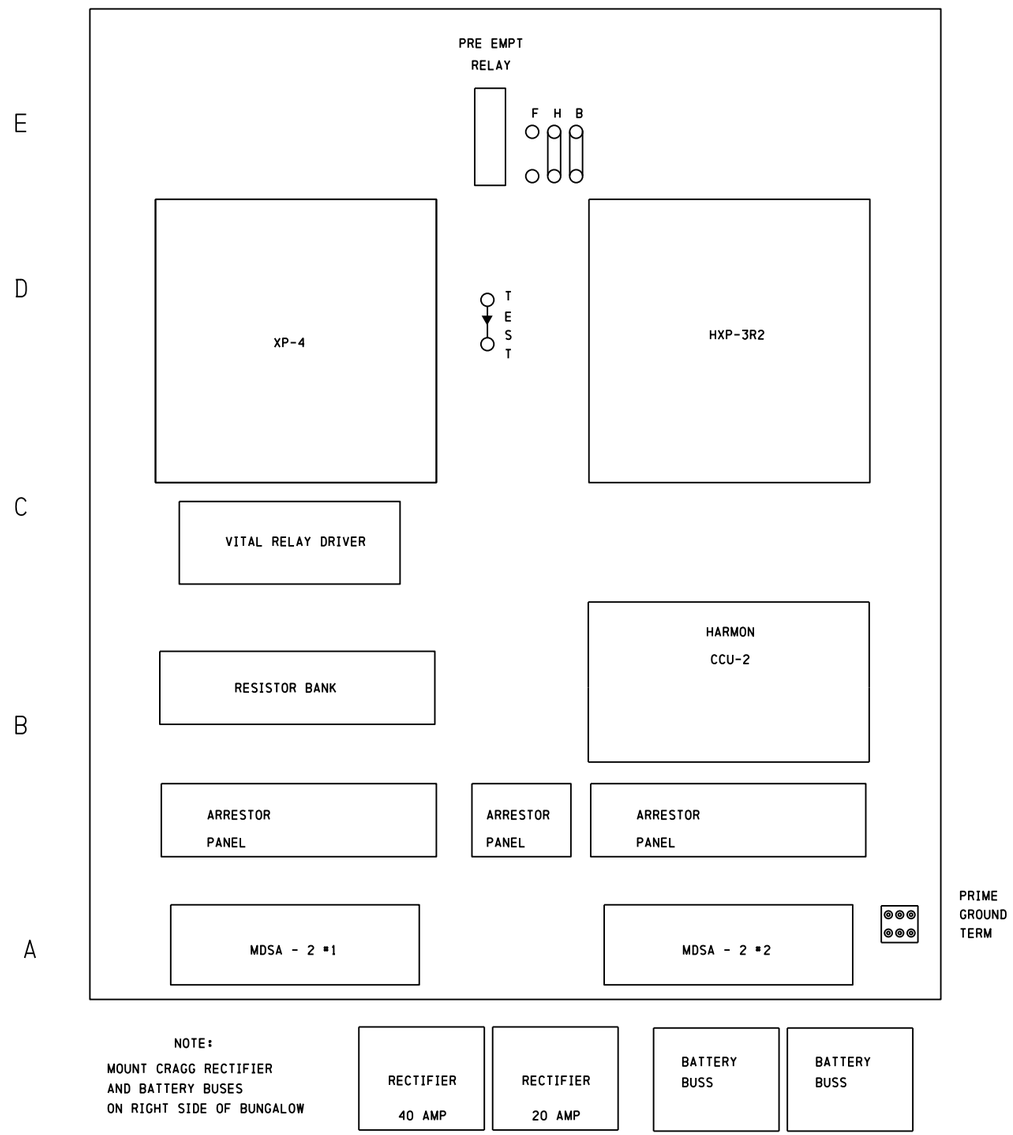

NOTE:
MOUNT CRAGG RECTIFIER
AND BATTERY BUSES
ON RIGHT SIDE OF BUNGALOW

USE BARE #6 COPPER SOLID
WIRE BELOW GROUND

USE INSULATED #6 SOFT COPPER
SOLID WIRE ABOVE GROUND

PRIME GROUND TERMINAL BLOCK
BONDED TO EXTERIOR OF BUNGALOW

AC POWER IS NOT TO ENTER
THRU CABLE CHUTE

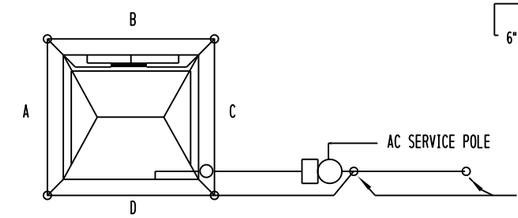

GROUNDING DIAGRAM

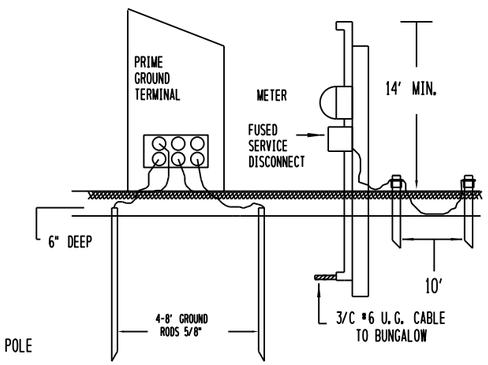

SIDE "A"

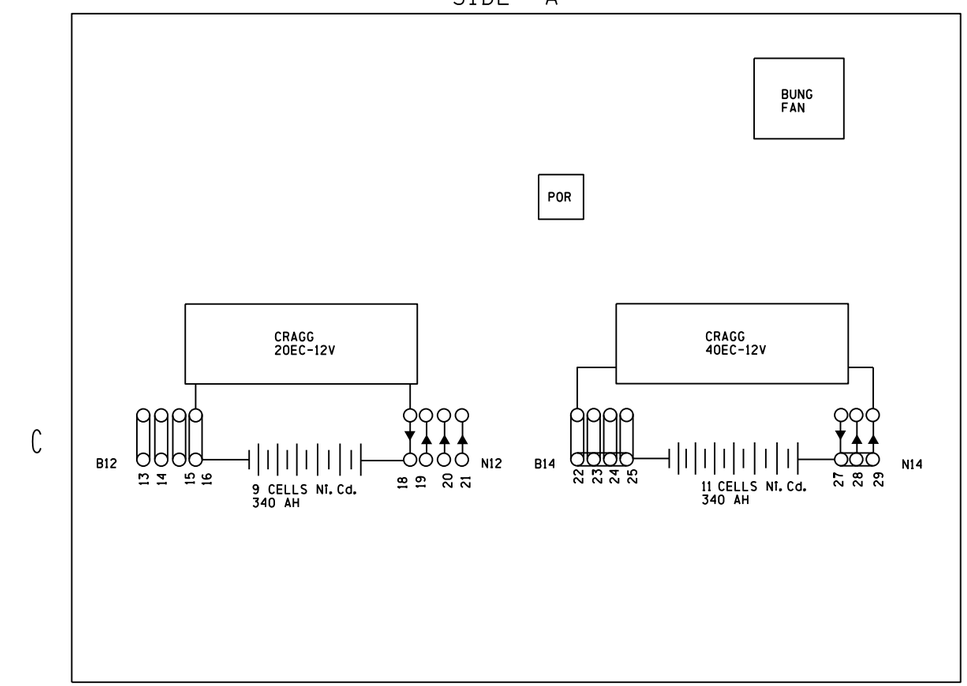

FIELD TO VERIFY LAYOUT DETAIL
& BATTERY BANK WIRE DETAIL

TO BE CONFIRMED

CONFIRMED
DATE _____
BY _____
(PRINT NAME)

PROPOSED D	PROPOSED M	PROPOSED Y	REVISIONS	D	C	COMPLETED D	COMPLETED M	COMPLETED Y	C
08	05	01	REV. PER FIELD			14	05	01	NRB
09	05	03	MODIFY CROSSING			11	05	06	WL
15	02	05	REPLACE HD LINK	LAS		11	05	06	WL
14	09	07	ADDED XP4	GET	GET	14	09	07	GET
			FIELD CHECK			02	03	15	TPF

REGION SOUTHERN
SUB. WAUKESHA 435
CN

SIGNALS AND COMMUNICATIONS
EDMONTON
27 DECEMBER 1995
DES. PAM
CH. FAP

BUNGALOW LAYOUT

DES PLAINES, IL
TOUHY AVE

WAU-020.80-10

DOT#689 651T

SIEMENS INDUSTRY INC	
DES.: NAD	DATE: 2/01/15
CKD.: MRB	ISSUE DATE: N/A
DRN.: NAD	PLAN NO.: N/A
P TIME: 14:24	P DATE: $$PLOT_DATE
JOB NO.: PWCA10408	
EST. NO.: XP-7628	
SHEET 10 OF 11	
CAD ID.: WAU-020.80-10	

SIEMENS INDUSTRY INC
LOUISVILLE DIVISION, LOUISVILLE, KY

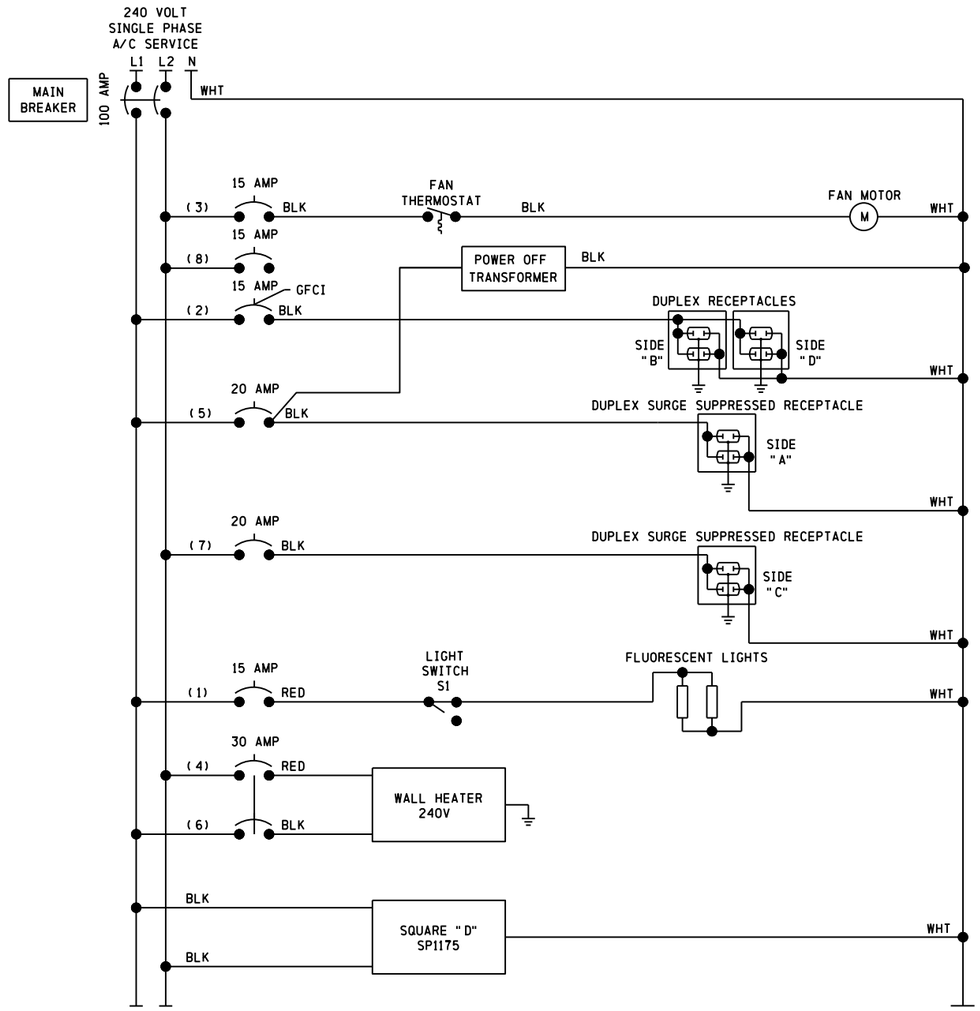

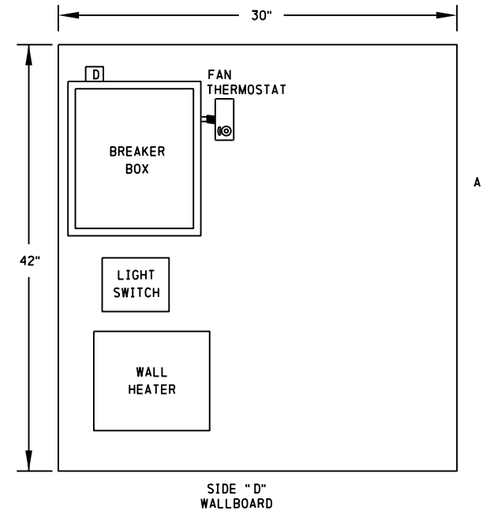

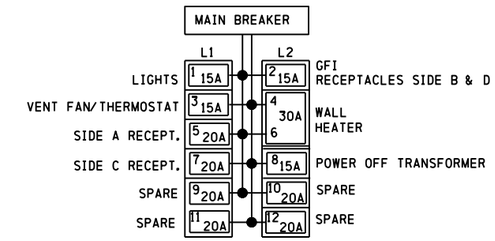

BREAKER POSITIONS

NOTE:
1. INSTALL 20A BREAKERS IN SPARE POSITION.

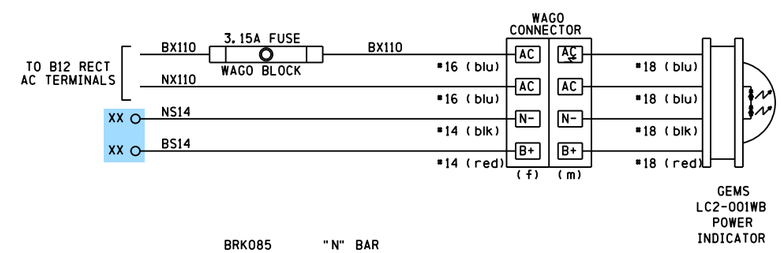

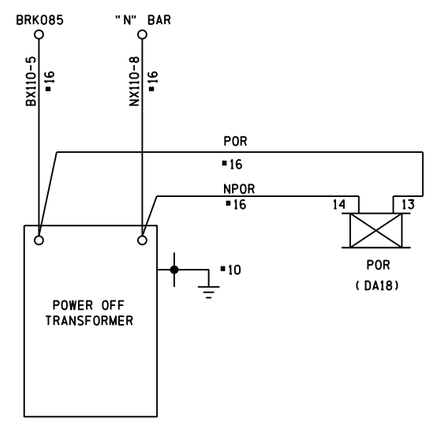

FIELD TO VERIFY ALL POWER DISTRIBUTION CICUITS

TO BE CONFIRMED

CONFIRMED
DATE _____
BY _____
(PRINT NAME)

PROPOSED D	M	Y	REVISIONS	D	C	COMPLETED D	M	Y	C
			REDRAWN/FIELD CHECK			02	03	15	TPF

REGION SOUTHERN
SUB. WAUKESHA 435

SIGNALS AND COMMUNICATIONS HOMEWOOD
DES.
CH.

AC POWER DISTRIBUTION
DES PLAINES, IL
TOUHY AVE

WAU-020.80-11

DOT#689 651T

12

REVISIONS				
NO.	DATE	BY	DESCRIPTION	APP. BY
1				
2				
3				
4				
5				

SIEMENS INDUSTRY INC

DES.: NAD	DATE: 21/01/15	JOB NO.: PWCA10408	
CKD.: MRB	ISSUE DATE: N/A	EST. NO.: XP-7628	
DRN.: NAD	PLAN NO.: N/A	SHEET 11 OF 11	
P. TIME: 14:24	P. DATE: $$PLOT_DATE	CAD ID.: WAU-020.80-11	

SIEMENS INDUSTRY INC
LOUISVILLE DIVISION, LOUISVILLE, KY

wau-020.80-11.dgn
06-MAY-2015