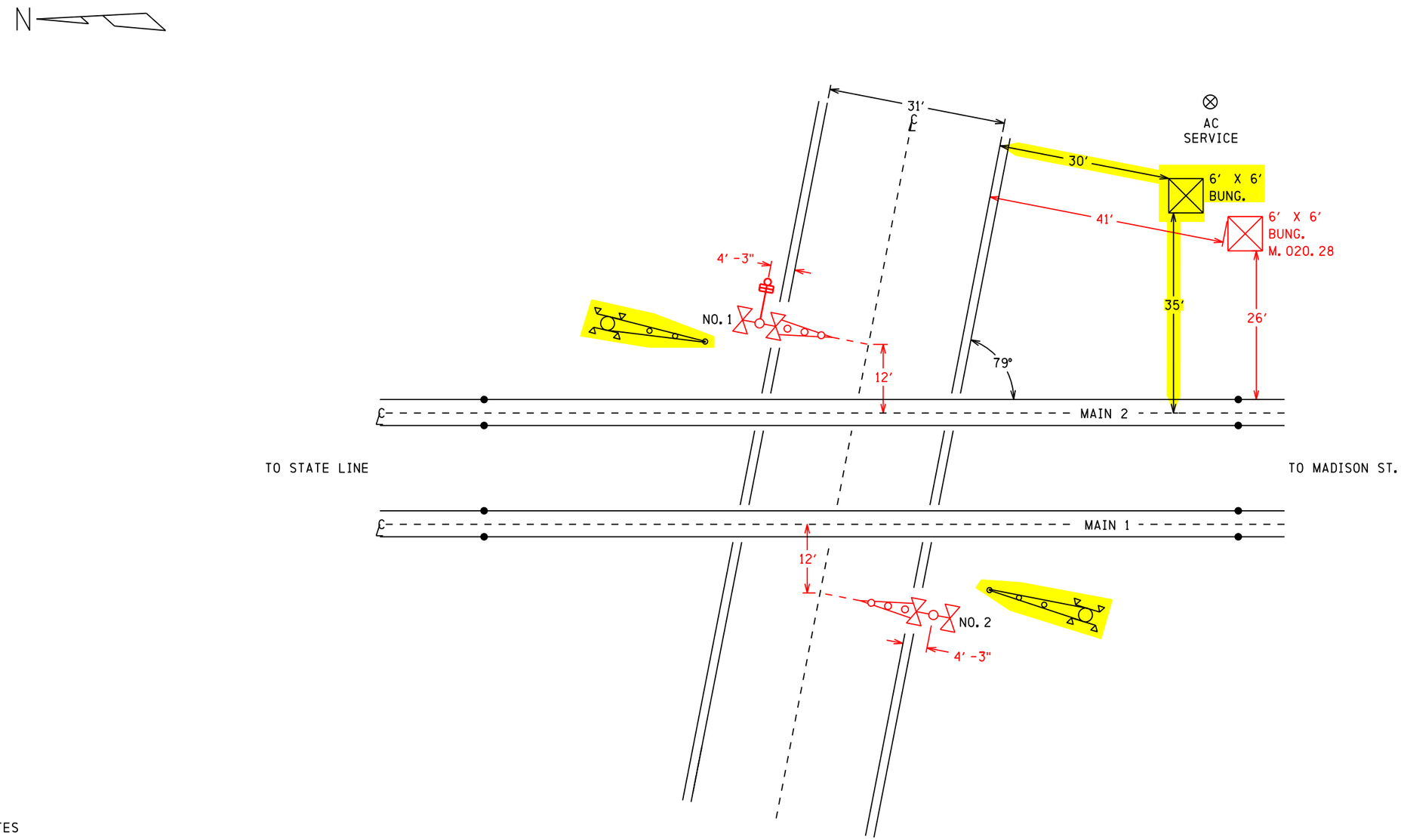

NOTES

1) 40 MPH DESIGN SPEED - MAIN 1 & 2
2) 45 FEET MAXIMUM CLEARANCE DISTANCE
3) 132 FEET ISLAND DISTANCE - MAIN 1 & 2
4) CONSTANT WARNING CONTROL
5) APPROACH CIRCUIT DISTANCE PROVIDES FOR:
   1 SEC CLEARANCE TIME
   0 SEC PREEMPTION TIME (0 SEC ADVANCE TIME)
   21 SEC MINIMUM WARNING TIME
   4 SEC GATE DESCENT DELAY
   10 SEC BUFFER TIME
   5 SEC EQUIPMENT REACTION TIME
6) 18 FEET NO. 1 GATE ARM LENGTH
   18 FEET NO. 2 GATE ARM LENGTH

FIELD TO CONFRIM
ALL DETAILS

TO BE CONFIRMED

CONFIRMED
DATE _____
BY _____
(PRINT NAME)

PROPOSED
DESIGN NO. 15-0066
RED-IN YELLOW-OUT

AS INSTALLED
DATE _____
BY _____
(PRINT NAME)

PROPOSED D	PROPOSED M	PROPOSED Y	REVISIONS	D	C	COMPLETED D	COMPLETED M	COMPLETED Y	C
			PLAN REDRAWN			30	12	14	TPF
21	01	15	CROSSING UPGRADE	JBF	TPF				

REGION SOUTHERN
SUB. WAUKESHA 435
CN
SIGNALS AND COMMUNICATIONS HOMEWOOD
DES. MAJ
19 APRIL 1994
CH.
SITUATION SKETCH
SCALE 1" = 20'
DES PLAINES, IL
PRATT AVE
WAU-020.28-0
DOT# 689 649S
17

wau-020.28-0.dgn
06-MAY-2015

REVISIONS			
NO.	DATE	BY	DESCRIPTION	APP. BY
1				
2				
3				
4				
5				

FLASHING LIGHT UNITS ALIGNMENT TABLE

PRIMARY FRONT LIGHTS FOR VEHICLES							
SIG #	LIGHT #	ROUNDEL		ROAD SPEED	MINIMUM DISTANCE	RECOMMENDED DISTANCE	ALIGNMENT DISTANCE
		SIZE	TYPE	MPH	FT	FT	FT
1	1,2	12"	LED	30	270	450	
2	7,8	12"	LED	30	270	450	
BACK LIGHTS FOR VEHICLES							
SIG #	LIGHT #	ROUNDEL		ROAD SPEED	MINIMUM DISTANCE	RECOMMENDED DISTANCE	ALIGNMENT DISTANCE
		SIZE	TYPE	MPH	FT	FT	FT
1	3,4	12"	LED	N/A	N/A	N/A	50
2	5,6	12"	LED	N/A	N/A	N/A	50

NOTE
FIELD IS TO PROVIDE THE ACTUAL ALIGNMENT DISTANCE AS DETERMINED BY
SCP-706: ROAD CROSSING DEVICE LIGHT UNIT ALIGNMENT PROCEDURES

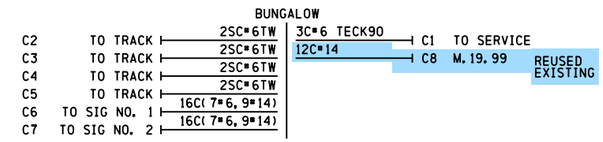

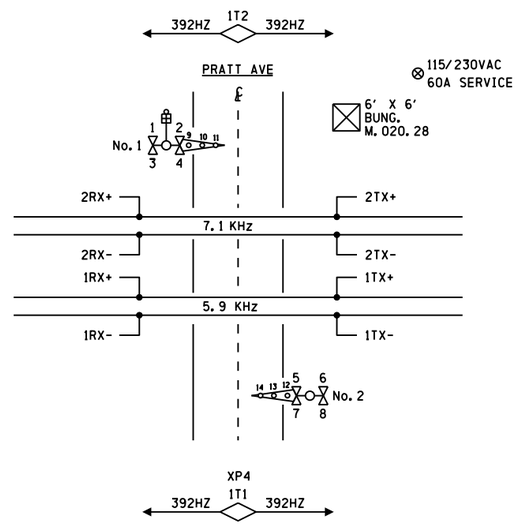

CONTENT	SHEET NO.
SITUATION SKETCH	0
TRACK LAYOUT & INDEX	01
ELECTROLOGIXS XP4 HARDWARE CONFIGURATION	02
ELECTROLOGIXS XP4 PROGRAM INFORMATION	03
ELECTROLOGIXS XP4 TRACK 1& 2 MODULE CONNECTIONS	04
ELECTROLOGIXS XP4 IXC-20S #1& GFD MOD CONN	05
ELECTROLOGIXS XP4 IXC-20S #2	06
ELECTROLOGIXS XP4 UNIT 1& 2 POWER SUPPLY & COMM. CIRCUITS	07
SEAR II EVENT ANALYZER/RECORDER	08
SEARII PROGRAM DATA	09
GATE 1&2 MECH. CONTROL CIRCUITS SAFETRAN S-60	10
DC DISTRIBUTION	11
AC DISTRIBUTION	12
BUNGALOW LAYOUT TOP VIEW	13
BUNGALOW LAYOUT SIDE D & L.I.G.P. INSIDE	14
ENTRANCE BOARD L.I.G.P. OUTSIDE	15
BUNGALOW LAYOUT SIDES A, B & C	16

wau-020.28-01.dgn
06-MAY-2015

SIEMENS INDUSTRY INC		
DES.: NAD	DATE: 21/01/15	JOB NO.: PWCA10408
CKD.: MRB	ISSUE DATE: N/A	EST. NO.: XP-7628
DRN.: NAD	PLAN NO.: N/A	SHEET 1 OF 16
P TIME: 13:57	P DATE: $$PLOT_DATE	CAD ID.: WAU-020.28-01

TO BE CONFIRMED

CONFIRMED
DATE _____
BY _____
(PRINT NAME)

SII 21 JAN 2015
PROPOSED
DESIGN NO. 15-0066
RED-IN YELLOW-OUT

AS INSTALLED
DATE _____
BY _____
(PRINT NAME)

PROPOSED			REVISIONS	D	C	COMPLETED			C
D	M	Y				D	M	Y	

REGION SOUTHERN
SUB. WAUKESHA 435

SIGNALS AND COMMUNICATIONS HOMEWOOD
21 JANUARY 2015
DES. NAD
CH. MRB

TRACK LAYOUT & INDEX

DES PLAINES, IL
PRATT AVE

WAU-020.28-01

DOT#689 649S

SIEMENS INDUSTRY INC
LOUISVILLE DIVISION, LOUISVILLE, KY

REVISIONS			
NO.	DATE	BY	DESCRIPTION	APP. BY
1				
2				
3				
4				
5				

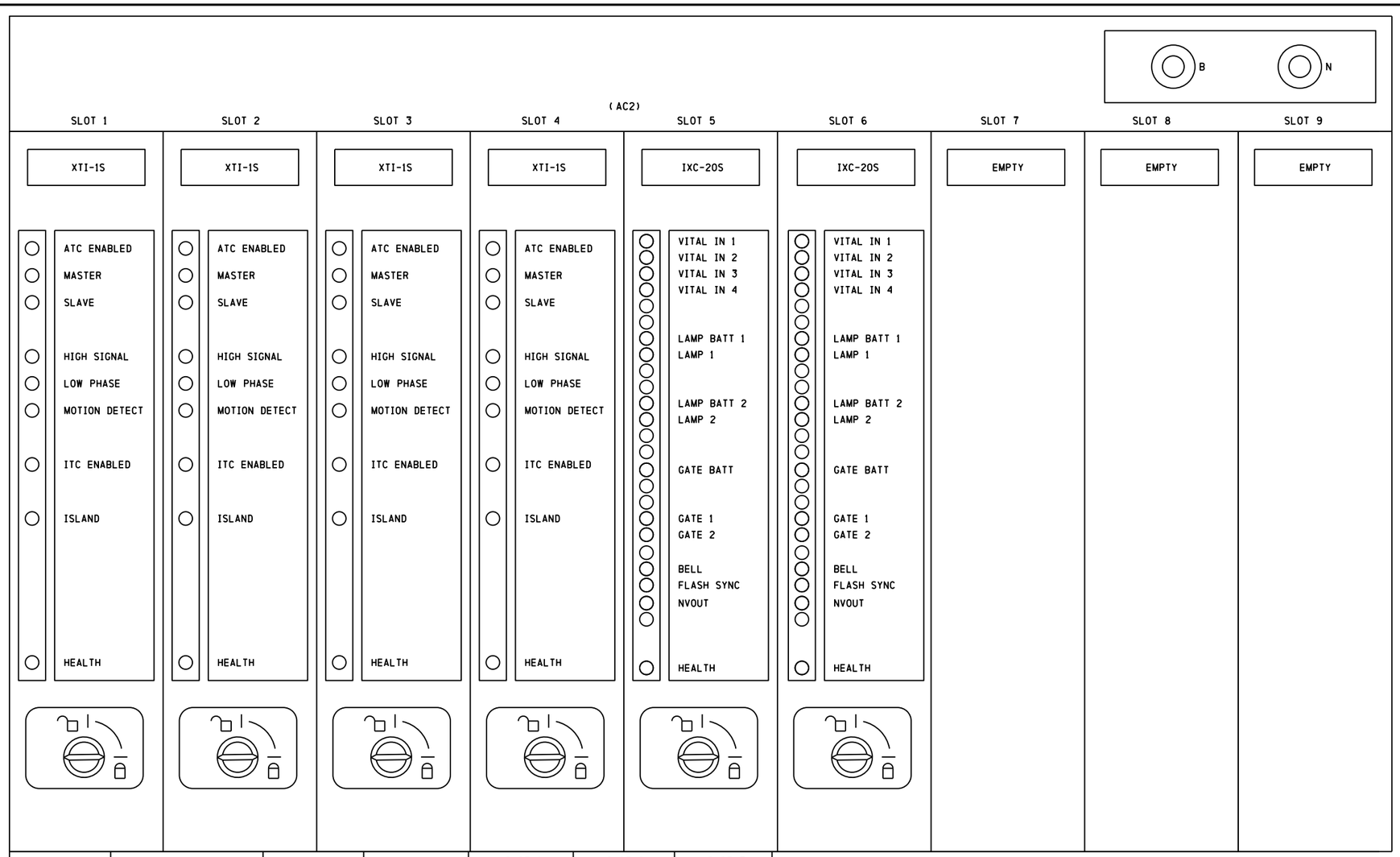

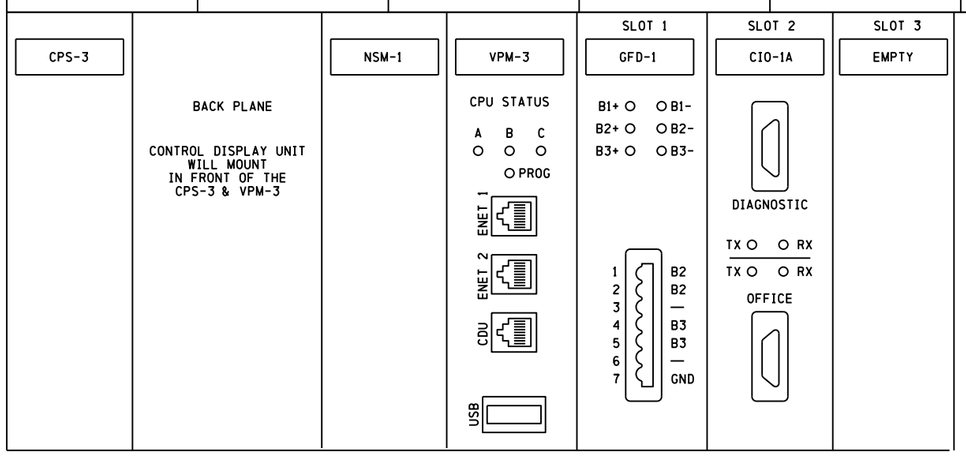

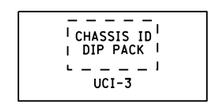

NOTES

CDU-1 = CONTROL DISPLAY UNIT
CPS-3 = CENTRAL POWER SUPPLY
VPM-3 = VITAL PERIPHERAL MASTER MODULE
GFD-1 = GROUND FAULT DETECTOR MODULE
CIO-2A = COMMUNICATION INPUT/OUTPUT MODULE
CIO-1A = COMMUNICATION INPUT/OUTPUT MODULE
UCI-3 = CHASSIS INFORMATION MODULE
XTI-1S = CROSSING TRACK INTERFACE
IXC-20S = INTERGRATED CROSSING CONTROLLER
VIO-44R = VITAL 4 IN / 4 OUT

ELECTROLOGIXS COMMUNICATION NOTES:

SERIAL PORT 1 (VPM-2+ & VPM-3)
- -GENISYS
- -SCS-128
- -LCP (MUST USE EXTERNAL CURRENT LOOP ADAPTER P/N 203051-000 FOR GENERIC/CUSTOM LCP UNITS OR CIO-2A TO SOFTWARE PANEL)
- -UCE

SERIAL PORT 2 & 3 (VPM-2+ & VPM-3)
- -ATCS (MUST USE CIO-MDA TO RADIO)
- -LCP (MUST USE EXTERNAL CURRENT LOOP ADAPTER P/N 203051-000 FOR GENERIC/CUSTOM LCP UNITS OR CIO-2A TO SOFTWARE PANEL)
- -HAWK
- -REMOTE (RP2000)

ETHERNET (IP-BASED PROTOCOLS VPM-3 ONLY)
GENISYS
REMOTE (RP2000)

SII 21 JAN 2015

PROPOSED
DESIGN NO. 15-0066
RED-IN YELLOW-OUT

AS INSTALLED
DATE _____
BY _____
(PRINT NAME)

PROPOSED			REVISIONS	D	C	COMPLETED			C
D	M	Y				D	M	Y	

REGION SOUTHERN
SUB. WAUKESHA 435

SIGNALS AND COMMUNICATIONS HOMEWOOD
21 JANUARY 2015
DES. NAD
CH. MRB

ELECTROLOGIXS XP4
HARDWARE CONFIGURATION
DES PLAINES, IL
PRATT AVE

WAU-020.28-02

DOT#689 649S

SIEMENS INDUSTRY INC
DES.: NAD
CKD.: MRB
DRN.: NAD
P TIME: 13:58
DATE: 21/01/15
ISSUE DATE: N/A
PLAN NO.: N/A
P DATE: $$PLOT_DATE
JOB NO.: PWCA10408
EST. NO.: XP-7628
SHEET 2 OF 16
CAD ID.: WAU-020.28-02

SIEMENS INDUSTRY INC
LOUISVILLE DIVISION, LOUISVILLE, KY

wau-020.28-02.dgn
06-MAY-2015

XP4 SETUP

PROGRAM NAME	PRATT AVE	CABINET ID	14	CHECKSUM	18A8	CRC	AF8C

MDR SETUP								
MDR #		MDR1				MDR2			
WARNING TIME		31				31			
CW/ MD		CW				CW			
CWE-WT		80				80			
AUX RECVR DLY		5				5			
TRACK #		TK1	TK2	TK3	TK4	TK1	TK2	TK3	TK4
TRACK ASSIGNED		ASSIGNED	N/A	N/A	N/A	N/A	ASSIGNED	N/A	N/A
OFFSET DISTANCE		0	N/A	N/A	N/A	N/A	0	N/A	N/A
MD RESTART		5	N/A	N/A	N/A	N/A	5	N/A	N/A
SUDDEN SHUNT ZONE		DISABLED	N/A	N/A	N/A	N/A	DISABLED	N/A	N/A
POSITIVE START	PSEN	DISABLED	N/A	N/A	N/A	N/A	DISABLED	N/A	N/A
	PSRX	0	N/A	N/A	N/A	N/A	0	N/A	N/A
	PST	0	N/A	N/A	N/A	N/A	0	N/A	N/A
POST JOINT DETECT	PJEN	DISABLED	N/A	N/A	N/A	N/A	DISABLED	N/A	N/A
	PJRX	0	N/A	N/A	N/A	N/A	0	N/A	N/A
	PJDET	0	N/A	N/A	N/A	N/A	0	N/A	N/A

• FIELD ADJUSTMENT

APPLICATION SOFTWARE INFORMATION	
NAME	PRATT AVE
REV	
CHECKSUM	CRC
18A8	AF8C
CHASSIS ID# 14	ID STRAPPING

CHASSIS ID DIP SHUNTS
LOCATED ON BACKPLANE
UNDERNEATH UCI-3 MODULE

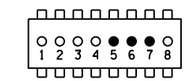

● = TAB PUNCHED OUT (BROKEN)
○ = TAB INTACT (MADE)
LEAVE TAB INTACT TO OBTAIN ID NUMBER

TRACK SETUP			
BASIC SETUP		TRACK 1	TRACK 2
FREQUENCY		392 HZ	392 HZ
MASTER/ SLAVE		MASTER	SLAVE
TCA (TRANSMITTER CHECK)		•	•
DIRECTION MODE		B	B
LIA (LUMPED IMPEDANCE)		•	•
NBS COMP RX		•	•
AUTO RX		•	•
APPROACH LENGTH		2120 FT	2120 FT
ADVANCED SETUP		TRACK 1	TRACK 2
MOTION DET TIMER	MDEN	DISABLED	DISABLED
	MDTT	NA	NA
FALSE SHUNT TIMER	FSEN	DISABLED	DISABLED
	FSRX	NA	NA
	FST	NA	NA
APPROACH RELEASE TIMER	AREN	DISABLED	DISABLED
	ARRX	NA	NA
	ART	NA	NA
LOSS OF SHUNT TIMER		30	30
IJ-LOS TIMER		5	5
MAINTENANCE MENU		TRACK 1	TRACK 2
ENABLE/ DISABLE		ENABLED	ENABLED
DISABLE TIMEOUT		NA	NA
BALLAST COMP		•	•
PHASE COMP		•	•

• FIELD ADJUSTMENT

ISLAND SETUP INFORMATION		
TRACK #	TRACK 1	TRACK 2
ENABLE/ DISABLE	ENABLED	ENABLED
FREQUENCY	5.9	7.1
LOSSOF SHUNT	2	2
FAULT DELAY	1	1

• FIELD ADJUSTMENT

EXECUTIVE SOFTWARE INFORMATION	
NAME	
REV	
PART #	
CHECKSUM	CRC

SII 21 JAN 2015

PROPOSED
DESIGN NO. 15-0066
RED-IN YELLOW-OUT

AS INSTALLED
DATE _____
BY _____
(PRINT NAME)

REVISIONS								
PROPOSED D	M	Y	REVISIONS	D	C	COMPLETED D	M	Y	C

REGION SOUTHERN
SUB. WAUKESHA 435

SIGNALS AND COMMUNICATIONS HOMEWOOD
DES. NAD
21 JANUARY 2015
CH. MRB

ELECTROLOGIXS XP4
PROGRAM INFORMATION
DES PLAINES, IL
PRATT AVE

WAU-020.28-03

DOT# 689 649S

REVISIONS			
NO.	DATE	BY	DESCRIPTION	APP. BY
1				
2				
3				
4				
5				

SIEMENS INDUSTRY INC

DES.: NAD	DATE: 21/01/15	JOB NO.: PWCA10408	
CKD.: MRB	ISSUE DATE: N/A	EST. NO.: XP-7628	
DRN.: NAD	PLAN NO.: N/A	SHEET 3 OF 16	
P TIME: 13:58	P DATE: $$PLOT_DATE	CAD ID.: WAU-020.28-03	

SIEMENS INDUSTRY INC
LOUISVILLE DIVISION, LOUISVILLE, KY

wau-020.28-03.dgn
06-MAY-2015

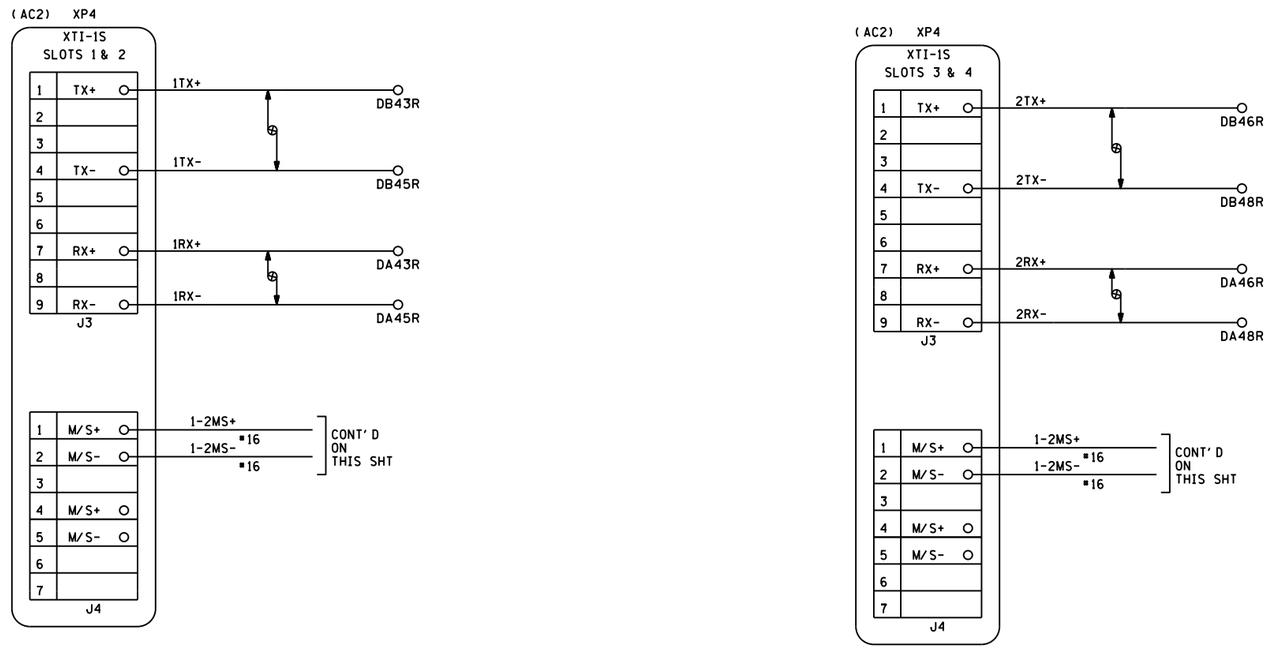

NOTES

1) ALL WIRING TO BE #10 AWG UNLESS OTHERWISE NOTED

DENOTES TWISTED PAIR

SII 21 JAN 2015

PROPOSED
DESIGN NO. 15-0066
RED-IN YELLOW-OUT

AS INSTALLED
DATE _____
BY _____
(PRINT NAME)

PROPOSED D	M	Y	REVISIONS	D	C	COMPLETED D	M	Y	C

REGION SOUTHERN
SUB. WAUKESHA 435

SIGNALS AND COMMUNICATIONS HOMEWOOD | DES. NAD
21 JANUARY 2015 | CH. MRB

ELECTROLOGIXS XP4
TRACK 1 & 2 MODULE CONNECTIONS
DES PLAINES, IL
PRATT AVE

WAU-020.28-04

DOT# 689 649S

REVISIONS			
NO.	DATE	BY	DESCRIPTION	APP. BY
1				
2				
3				
4				
5				

SIEMENS INDUSTRY INC

DES.: NAD	DATE: 21/01/15	JOB NO.: PWCA10408	
CKD.: MRB	ISSUE DATE: N/A	EST. NO.: XP-7628	
DRN.: NAD	PLAN NO.: N/A	SHEET 4 OF 16	
P TIME: 13:58	P DATE: $$PLOT_DATE	CAD ID.: WAU-020.28-04	

wau-020.28-04.dgn
06-MAY-2015

SIEMENS INDUSTRY INC
LOUISVILLE DIVISION, LOUISVILLE, KY

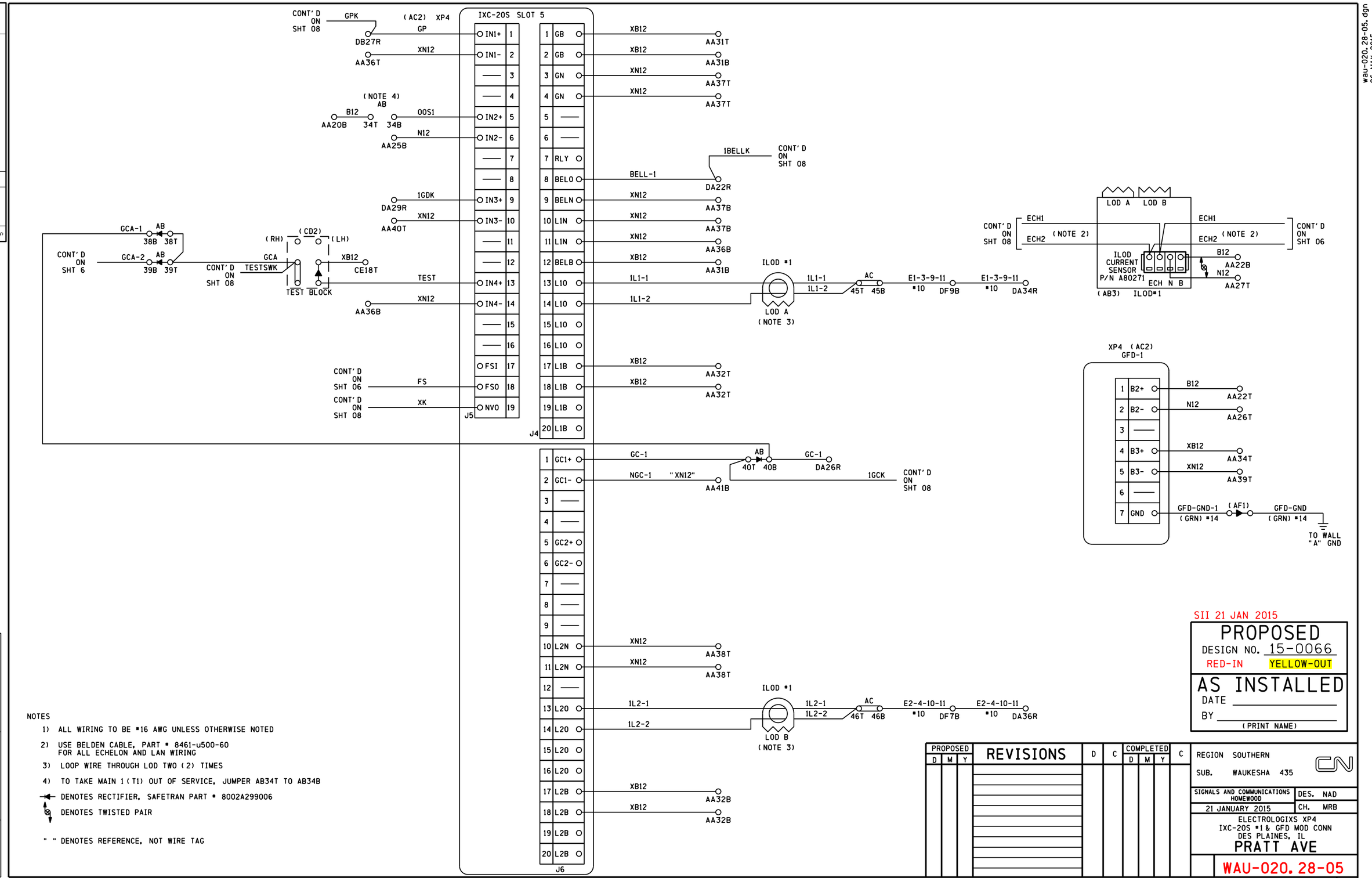

NOTES

1) ALL WIRING TO BE #16 AWG UNLESS OTHERWISE NOTED

2) USE BELDEN CABLE, PART # 8461-u500-60 FOR ALL ECHELON AND LAN WIRING

3) LOOP WIRE THROUGH LOD TWO (2) TIMES

4) TO TAKE MAIN 1 (T1) OUT OF SERVICE, JUMPER AB34T TO AB34B

DENOTES RECTIFIER, SAFETRAN PART # 8002A299006

DENOTES TWISTED PAIR

" " DENOTES REFERENCE, NOT WIRE TAG

SII 21 JAN 2015

PROPOSED
DESIGN NO. 15-0066
RED-IN YELLOW-OUT

AS INSTALLED
DATE
BY
(PRINT NAME)

PROPOSED D	M	Y	REVISIONS	D	C	COMPLETED D	M	Y	C

REGION SOUTHERN
SUB. WAUKESHA 435

SIGNALS AND COMMUNICATIONS HOMEWOOD
21 JANUARY 2015
DES. NAD
CH. MRB

ELECTROLOGIXS XP4
IXC-20S #1 & GFD MOD CONN
DES PLAINES, IL
PRATT AVE

WAU-020.28-05

DOT# 689 649S

SIEMENS INDUSTRY INC
LOUISVILLE DIVISION, LOUISVILLE, KY

NO.	DATE	BY	DESCRIPTION	APP. BY
1				
2				
3				
4				
5				

REVISIONS

SIEMENS INDUSTRY INC

DES. : NAD	DATE: 21/01/15	JOB NO. : PWCA10408	
CKD. : MRB	ISSUE DATE: N/A	EST. NO. :XP-7628	
DRN. : NAD	PLAN NO. :N/A	SHEET 5 OF 16	
P TIME:13:58	P DATE:$$PLOT_DATE	CAD ID. : WAU-020.28-05	

wau-020.28-05.dgn
06-MAY-2015

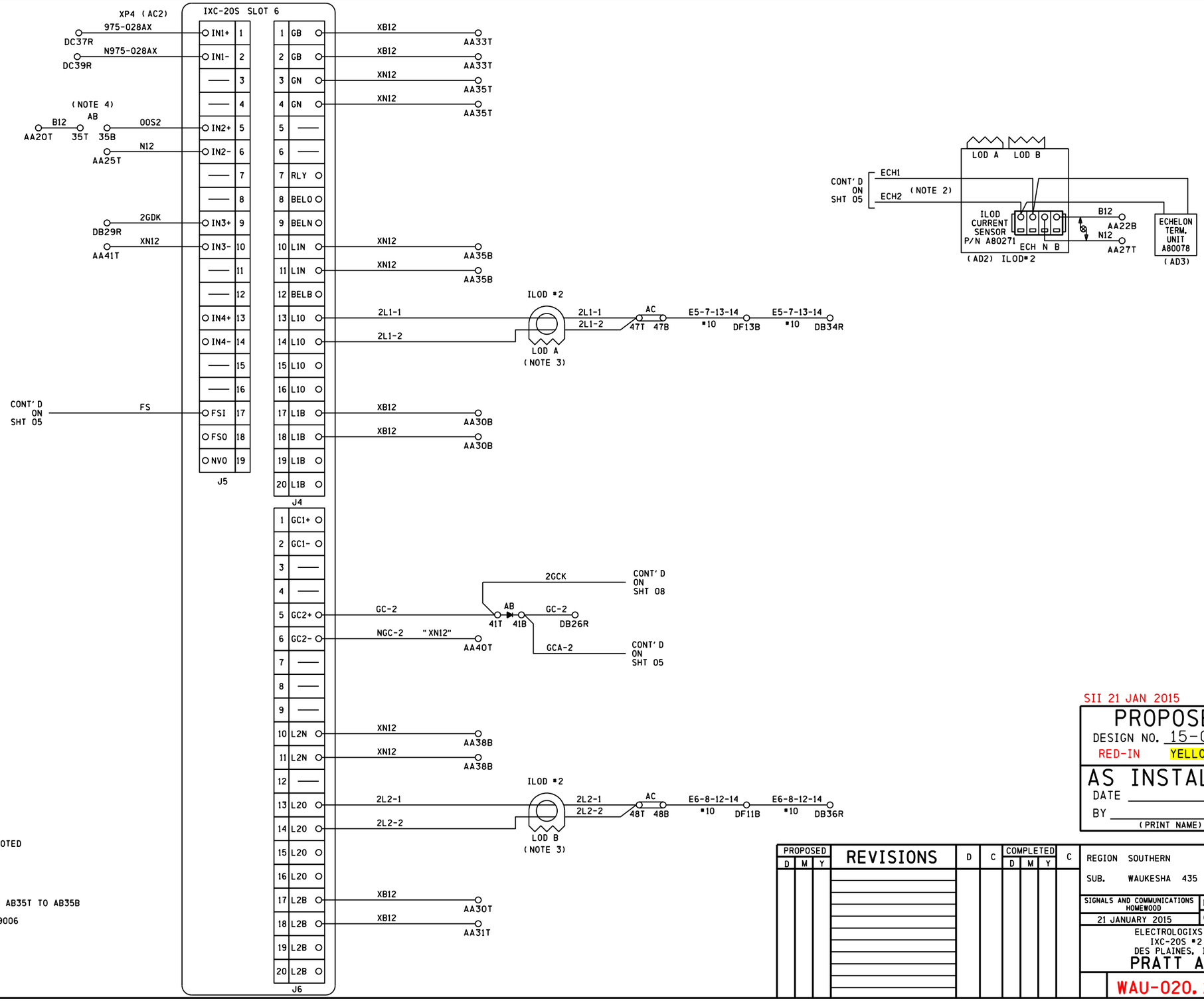

NOTES

1) ALL WIRING TO BE #16 AWG UNLESS OTHERWISE NOTED

2) USE BELDEN CABLE, PART # 8461-u500-60 FOR ALL ECHELON AND LAN WIRING

3) LOOP WIRE THROUGH LOD TWO (2) TIMES

4) TO TAKE MAIN 2 (T2) OUT OF SERVICE, JUMPER AB35T TO AB35B

DENOTES RECTIFIER, SAFETRAN PART # 8002A319006

DENOTES TWISTED PAIR

" " DENOTES REFERENCE, NOT WIRE TAG

REVISIONS				
NO.	DATE	BY	DESCRIPTION	APP. BY
1				
2				
3				
4				
5				

SIEMENS INDUSTRY INC			
DES. : NAD	DATE: 21/01/15	JOB NO.: PWCA10408	
CKD. : MRB	ISSUE DATE: N/A	EST. NO.: XP-7628	
DRN. : NAD	PLAN NO.: N/A	SHEET 6 OF 16	
P TIME: 13:58	P DATE: $$PLOT_DATE	CAD ID.: WAU-020.28-06	

wau-020.28-06.dgn
06-MAY-2015

SII 21 JAN 2015

PROPOSED
DESIGN NO. 15-0066
RED-IN YELLOW-OUT

AS INSTALLED
DATE
BY
(PRINT NAME)

PROPOSED			REVISIONS	D	C	COMPLETED			C
D	M	Y				D	M	Y	

REGION SOUTHERN
SUB. WAUKESHA 435

SIGNALS AND COMMUNICATIONS HOMEWOOD
21 JANUARY 2015
DES. NAD
CH. MRB

ELECTROLOGIXS XP4
IXC-20S #2
DES PLAINES, IL
PRATT AVE

WAU-020.28-06

SIEMENS INDUSTRY INC
LOUISVILLE DIVISION, LOUISVILLE, KY

DOT#689 649S

REVISIONS				
NO.	DATE	BY	DESCRIPTION	APP. BY
1				
2				
3				
4				
5				

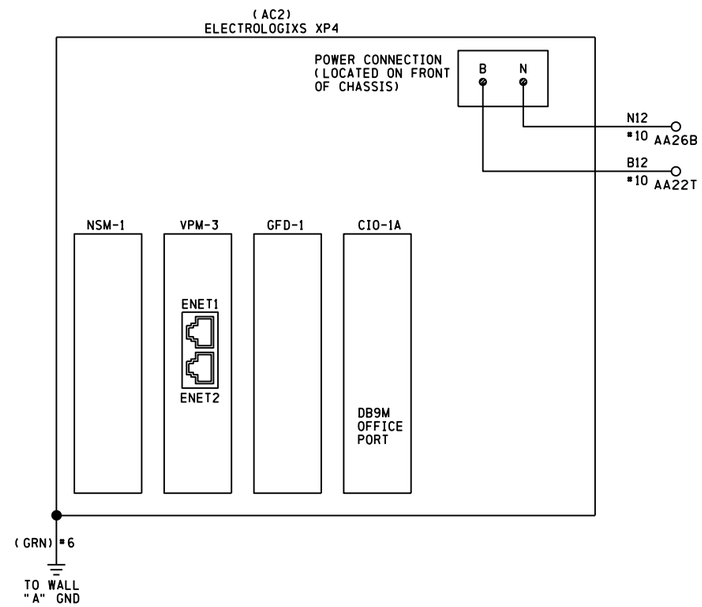

wau-020.28-07.dgn
06-MAY-2015

SII 21 JAN 2015

PROPOSED
DESIGN NO. 15-0066
RED-IN YELLOW-OUT

AS INSTALLED
DATE _____
BY _____
(PRINT NAME)

PROPOSED			REVISIONS	D	C	COMPLETED			C
D	M	Y				D	M	Y	

REGION SOUTHERN
SUB. WAUKESHA 435

SIGNALS AND COMMUNICATIONS HOMEWOOD
21 JANUARY 2015
DES. NAD
CH. MRB

ELECTROLOGIXS XP4 UNIT 1 & 2
POWER SUPPLY & COMM. CIRCUITS
DES PLAINES, IL
PRATT AVE

WAU-020.28-07

DOT# 689 649S

SIEMENS INDUSTRY INC

DES.: NAD	DATE: 21/01/15	JOB NO.: PWCA10408	
CKD.: MRB	ISSUE DATE: N/A	EST. NO.: XP-7628	
DRN.: NAD	PLAN NO.: N/A	SHEET 7 OF 16	
P TIME: 13:58	P DATE: $$PLOT_DATE	CAD ID.: WAU-020.28-07	

SIEMENS INDUSTRY INC
LOUISVILLE DIVISION, LOUISVILLE, KY

REVISIONS				
NO.	DATE	BY	DESCRIPTION	APP. BY
1				
2				
3				
4				
5				

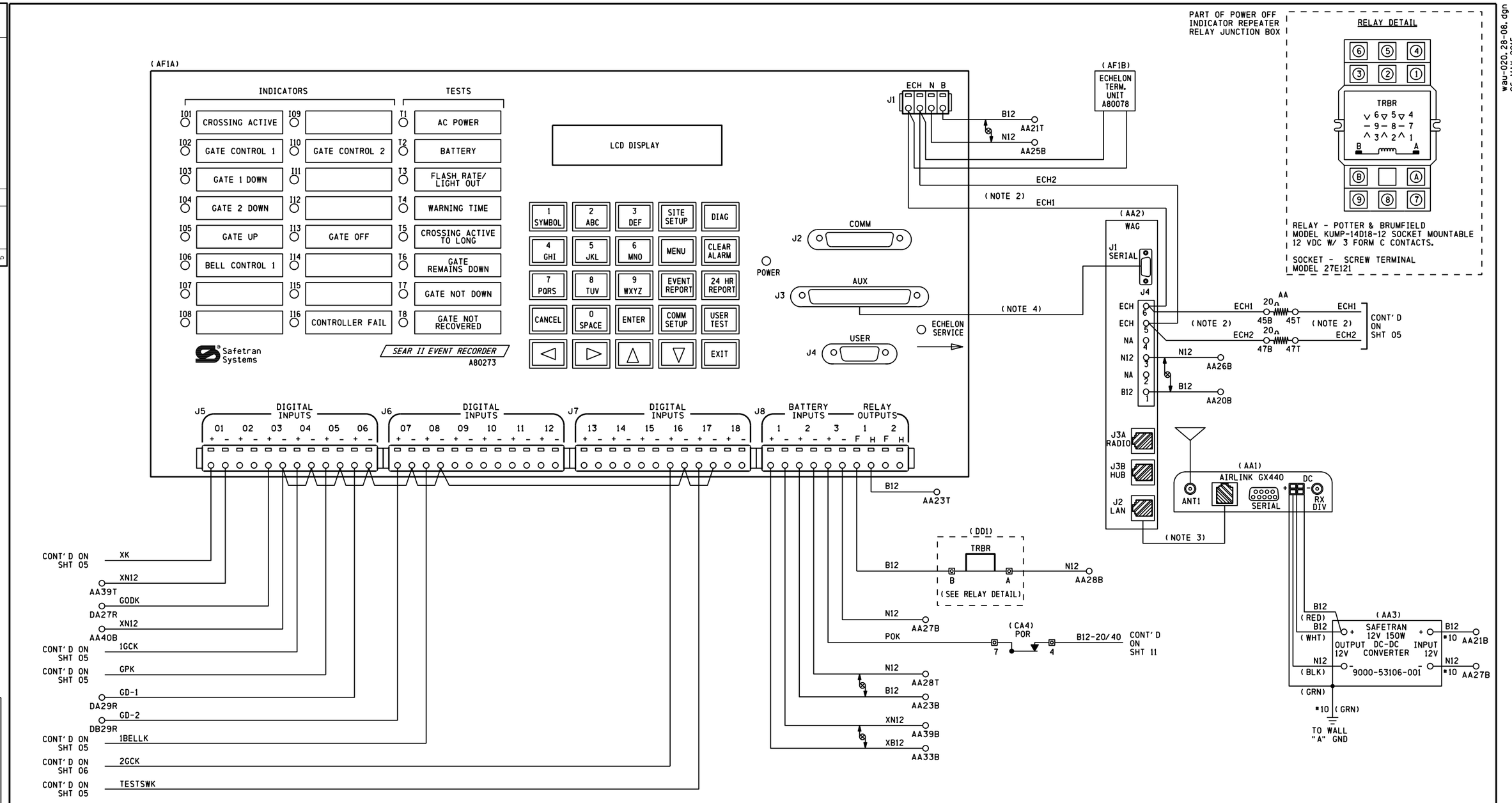

NOTES

1) ALL WIRING #16 AWG UNLESS OTHERWISE NOTED
2) USE BELDEN CABLE, PART # 8461-u500-60 FOR ALL ECHELON AND LAN WIRING
3) STRAIGHT THROUGH CAT 5/5E UTP CABLE
4) USE NULL SERIAL CABLE

DENOTES TWISTED PAIR

SII 21 JAN 2015

PROPOSED
DESIGN NO. 15-0066
RED-IN YELLOW-OUT

AS INSTALLED
DATE
BY
(PRINT NAME)

PROPOSED D	M	Y	REVISIONS	D	C	COMPLETED D	M	Y	C

REGION SOUTHERN
SUB. WAUKESHA 435

SIGNALS AND COMMUNICATIONS HOMEWOOD
21 JANUARY 2015
DES. NAD
CH. MRB

SEAR II
EVENT ANALYZER/RECORDER
DES PLAINES, IL
PRATT AVE

WAU-020.28-08

DOT#689 649S

SIEMENS INDUSTRY INC

DES. : NAD	DATE: 21/01/15	JOB NO.: PWCA10408	
CKD. : MRB	ISSUE DATE: N/A	EST. NO.: XP-7628	
DRN. : NAD	PLAN NO.: N/A	SHEET 8 OF 16	
P. TIME: 13:58	P. DATE: $$PLOT_DATE	CAD ID.: WAU-020.28-08	

SIEMENS INDUSTRY INC
LOUISVILLE DIVISION, LOUISVILLE, KY

wau-020.28-08.dgn
06-MAY-2015

REVISIONS				
NO.	DATE	BY	DESCRIPTION	APP. BY
1				
2				
3				
4				
5				

MENU ITEMS

RESET NAMES/MODULES	NO	
AC OFF ALARM TIME (minutes)	60	MIN.
MINIMUM NORMAL WARNING TIME (seconds)	21	SEC.
DESIRED WARNING TIME (seconds)	31	SEC.
IGNORE WARNING TIMES BELOW (seconds)	3	SEC.
PRERING/STNSTOP TIME (minutes)	10	MIN.
SWITCH MOVE TIMER (minutes)	30	MIN.
HOW MANY GATES?	2	
GATE 1 DOWN	☐ NOT ENERGIZED	☑ ENERGIZED
GATE 2 DOWN	☐ NOT ENERGIZED	☑ ENERGIZED
GATE 3 DOWN	☑ NOT ENERGIZED	☐ ENERGIZED
GATE 4 DOWN	☑ NOT ENERGIZED	☐ ENERGIZED
HOW MANY SETS OF GCPS?	0	
(IF 1 SET IS SELECTED) DOES GCP HAVE STANDBY?	N/A	
(IF 2 SETS ARE SELECTED) DOES 2ND GCP HAVE STANDBY?	N/A	
HOW MANY ILODS?	2	
(IF 1 OR MORE IS SELECTED) MINIMUM FLASH RATE	55	
HOW MANY SSCCIII UNITS?	0	
1SSCC TESTSWINPUT?	NA	SEC.
GATE NOT DOWN ALARM TIME	15	SEC.
CROSSING ACTIVE ALARM AFTER (minutes)	20	MIN.
FLASHING TROUBLE LIGHT OUTPUT? (NOTE 5)	NO	
DIGITAL INPUTS NAMES	DEFAULT	
(XB14) XB12 LOW VOLTAGE ALARMS (IN TENTHS)	136	
(MB12)B12 LOW VOLTAGE ALARMS (IN TENTHS)	111	
(IF DIGITAL INPUT NAMES IS "USER DEFINED") (SB12) B14 LOW VOLTAGE ALARMS (IN TENTHS)	111	
ALLOW DTMF CONTROL (NOTE 8)	NO	
(IF DTMF CONTROL IS SELECTED) DIGIT #1	N/A	
DIGIT #2	N/A	
DIGIT #3	N/A	
DIGIT #4	N/A	
DIGIT #5	N/A	
VHFC CHANNEL (1 to 8)	N/A	
DTMF TIME-OUT (30 TO 240 SEC.)	N/A	SEC.
DTMF OUTPUT 2 DELAY (NOTE 6)	N/A	

CURRENT SOFTWARE REVISION:
EXECUTIVE: 9V645-A01Y.bin APPLICATION: CN028B5.CDL

BATTERY INPUT CONFIGURATION

INPUT	USAGE	LABEL	NORMAL RANGE
1	LIGHT BATTERY	XB12/XN12	MINIMUM LEVEL - 18 VDC
2	STANDBY BATTERY	B12/N12	MINIMUM LEVEL - 18 VDC
3	POR	AC/POR	POWER ON > 0.5 VDC (WHEN REQUIRED)

RELAY OUTPUT CONFIGURATION

OUTPUT	USAGE	LABEL	CONTACT CLOSED	CONTACT OPEN	TOGGLE	
1	TROUBLE LIGHT	TRBLE LITE	OFF	ON	FLASH	(NOTE 5)
2	DTMF OUTPUT 1	DTMFOUT1	ACTIVE	INACTIVE	N/U	
3	DTMF OUTPUT 2	DTMFOUT2	ACTIVE	INACTIVE	N/U	(NOTE 6)

DIGITAL INPUT CONFIGURATION

DIGITAL INPUT	USAGE	LABEL	NORMAL LOGIC STATE
1	MD/GCP 1	MD/GCP1K /NMD/GCP1K (NOTE 2)	1
2	ISLAND 1	ISL1K/NISL1K (NOTE 2)	1
3	GOD	GODK (NOTE 2)	1
4	GATE CONTROL 1	1GCK (NOTE 2)	1
5	GATE UP	GPK (NOTE 2)	1
6	GATE DOWN 1	1GDK (NOTE 3)	0 OR 1 (NOTE 1)
7	GATE DOWN 2	2GDK (NOTE 3)	0 OR 1 (NOTE 1)
8	BELL/LIGHTS 1	1BELLK (NOTE 2)	0
9	MD/GCP 2	MD/GCP2K /NMD/GCP2K (NOTE 2)	1
10	ISLAND 2	ISL2K/NISL2K (NOTE 2)	1
11	WRAP 1 (FR)	1WAK (NOTE 2) (FK)	1
12	WRAP 2 (XAPER)	2WAK (NOTE 2) (XAPEK)	1
13	BELL/LIGHTS 2	2BELLK (NOTE 2)	0
14	GATE DOWN 3	3GDK (NOTE 3)	0 OR 1 (NOTE 1)
15	GATE DOWN 4	4GDK (NOTE 3)	0 OR 1 (NOTE 1)
16	GATE CONTROL 2	2GCK (NOTE 2)	1
17	TEST SWITCH	TESTSWK (NOTE 2)	0
18	DAX1	DAX1 (NOTE 2)	1

LED CONFIGURATION (NOTE 4)

LED	LABEL	OFF*	ON*
01	CROSSING ACTIVE	MD/GCP1K & MD/GCP2K & XK & ISL1K & ISL2K ALL UP	MD/GCP1K OR MD/GCP2K OR XK OR ISL1K OR ISL2K DOWN
02	GATE CONTROL 1	1GCK UP	1GCK DOWN
03	GATE 1 DOWN	1GDK OFF (GATE 1 NOT DOWN)	1GDK ON (GATE 1 DOWN)
04	GATE 2 DOWN	2GDK OFF (GATE 2 NOT DOWN)	2GDK ON (GATE 2 DOWN)
05	GATE(S) UP	GPK ON (GATES UP)	GPK OFF (GATES NOT UP)
06	BELL CONTROL 1	1BELLK OFF	1BELLK ON
07	WRAP 1 (FR)	1WAK UP (FK UP)	1WAK DOWN (FK DOWN)
08	DAX	DAX1-4 ALL UP	DAX1, 2, 3 OR 4 DOWN
09	ISLAND OCCUPIED	ISLAND 1 OR 2 NOT OCCUPIED	ISLAND 1 & ISLAND 2 OCCUPIED
10	GATE CONTROL 2	2GCK UP	2GCK DOWN
11	GATE 3 DOWN	3GDK OFF (GATE 3 NOT DOWN)	3GDK ON (GATE 3 DOWN)
12	GATE 4 DOWN	4GDK OFF (GATE 4 NOT DOWN)	4GDK ON (GATE 4 DOWN)
13	GATE OFF	GOD ON	GOD OFF
14	BELL CONTROL 2	2BELLK OFF	2BELLK ON
15	WRAP 2 (XAPER)	2WAK UP (XAPEK UP)	2WAK DOWN (XAPEK DOWN)
16	CONTROLLER FAIL	CONTROLLER OK	CONTROLLER FAIL

ALARM CONDITIONS (NOTE 7)

ALARM (TEST) LEDS (GREEN LED = NO ALARM)

AC POWER (T1) (WHEN BATTERY INPUT #3 USED)
- RED FLASHING - AC CURRENTLY OFF, MORE THAN THE USER SELECTED TIME.
- RED STEADY - AC WAS OFF MORE THAN USER TIME SELECTED, BUT HAS SINCE BEEN RESTORED.
- YELLOW FLASHING - AC CURRENTLY OFF, FOR LESS THAN THE USER SELECTED TIME.
- YELLOW STEADY - AC WAS OFF LESS THAN USER TIME SELECTED, BUT HAS SINCE BEEN RESTORED.

BATTERY (T2)
- RED FLASHING - ONE OF THE BATTERY BANKS IS IN ALARM FOR MORE THAN 5 SECONDS.
- RED STEADY - ONE OF THE BATTERY BANKS IS IN ALARM FOR MORE THAN 5 SECONDS BUT HAS SINCE BEEN RESTORED.
- YELLOW FLASHING - ONE OF THE BATTERY BANKS IS IN ALARM FOR LESS THAN 5 SECONDS.
- YELLOW STEADY - ONE OF THE BATTERY BANKS IS IN ALARM FOR LESS THAN 5 SECONDS BUT HAS SINCE BEEN RESTORED.

LOD (T3)
- RED FLASHING - ONE OR MORE BULBS WAS OUT DURING A TRAIN MOVE, OR ONE OR MORE ILOD's ARE OFFLINE.
- RED STEADY - ONE OF THE ABOVE CONDITIONS HAD OCCURRED, BUT HAS SINCE RECOVERED.
- YELLOW STEADY - THE FLASH RATE WAS IN ALARM, BUT HAS SINCE CLEARED.
- YELLOW FLASHING - THE FLASH RATE WAS NOT NORMAL FOR LAST TRAIN MOVE.

WARN TIME (T4)
- RED FLASHING - LAST TRAIN MOVE HAD A WARNING TIME LESS THAN MIN WARN TIME ENTERED DURING SITE SETUP, DEFAULT IS 20 SECONDS.
- RED STEADY - WARNING TIME ALARM HAD BEEN SET, BUT LAST TRAIN MOVE HAD A NORMAL WARNING TIME.
- YELLOW FLASHING - LAST TRAIN HAD A WARNING TIME LESS THAN DESIRED WARN TIME BUT MORE THAN MIN WARN TIME.
- YELLOW STEADY - WARNING TIME MONITOR HAD BEEN SET, BUT LAST TRAIN MOVE HAD A NORMAL WARNING TIME.

CROSSING ACTIVE TOO LONG (T5)
- RED FLASHING - CROSSING IS ACTIVE AND HAS BEEN FOR MORE THAN THE USER SETTING, DEFAULT IS 20 MINUTES.
- RED STEADY - CROSSING WAS ACTIVE FOR MORE THAN THE USER SETTING, DEFAULT IS 20 MINUTES, AND HAS SINCE RECOVERED.

GATE REMAINS DOWN (T6)
- RED FLASHING - GCK IS UP, BUT ONE OF THE GATES HAS BEEN DOWN FOR 20+ MINUTES.
- RED STEADY - ALARM WAS TRIGGERED, BUT THE GATE(S) HAVE SINCE RECOVERED.

GATE NOT DOWN (T7)
- RED FLASHING - ONE OR MORE GATES, TOOK LONGER THAN THE USER DEFINED SETTING TO LOWER AFTER GCK WENT DOWN.
- RED STEADY - ALARM WAS TRIGGERED, BUT THE LAST GATE MOVE WAS OK.

GATE NOT RECOVERD (T8)
- RED FLASHING - GATE OFF HAS BEEN DETECTED.
- YELLOW FLASHING - ONE OR MORE GATES, TOOK LONGER THAN 20 SECONDS TO RAISE AFTER GCK WENT UP.
- YELLOW STEADY - ALARM WAS TRIGGERED, BUT GATES HAS SINCE RECOVERED TO PICK GPK.

SSCC FAIL (I16)
- RED STEADY - MAINTK INPUT IS LOW.
- OFF - SSCC OK.

(NOTES CONT'D)

7) ALL LED'S GREEN UPON START OF THE APPLICATION PROGRAM. ALL ALARM LED's CAN BE RESET TO THEIR CURRENT STATE BY PRESSING THE "CLEAR ALARM" KEY. IF AN ALARM CONDITION IS STILL VALID, THE LED WIL CONTINUE TO FLASH. ALL STEADY-COLORED LED's WILL BE RESET TO GREEN STEADY. ANY LED's NOT LIT ARE DEFECTIVE OR A PROBLEM EXISTS WITH THE APPLICATION PROGRAM.

8) ASSIGNED DTMF CODES:

ACTIVATE CROSSING (TRACK 1)	XXXXX11#
DE-ACTIVATE CROSSING (TRACK 1)	XXXXX10#
ACTIVATE CROSSING (TRACK 2)	XXXXX21#
DE-ACTIVATE CROSSING (TRACK 2)	XXXXX20#
ACTIVATE CROSSING (MAINTENANCE)	XXXXX31#
DE-ACTIVATE CROSSING (MAINTENANCE)	XXXXX30#

NOTES:
1) DEPENDING ON DESIGN OF THE CIRCUIT.
2) THESE INPUTS ARE AUTOMATICALLY DETECTED.
3) GDK1, 2, 3 & 4 INPUT TAGS WILL BE ASSIGNED BY EXISTING MENU QUESTIONS. IF NOT ASSIGNED, THESE INPUTS WILL BE OPEN FOR USE BY OTHER TAGS, WHICH CAN BE ASSIGNED FROM THE DIGITAL CONFIGURATION MENU ON THE SEARII.
4) LED's 01-16 ALL OFF IN NORMAL LOGIC STATE (NO TRAIN). ALL LED'S WILL BE OFF, UNLESS THE CIRCUIT REPRESENTED IS IN THE ACTIVE STATE. (I.e. IF 1GCK IS LOW, GATES WILL DROP, LED2 WILL BE ON, THEN WHEN 1GDK, 2GDK ARE IN THE DOWN STATE, LED's 3 &4 WILL BE LIT.)
5) IF THE ANSWER IS NO, THE TROUBLE LIGHT OUTPUT IS EITHER ON (NORMAL STATE) OR OFF (ALARM STATE). IF THE ANSWER IS YES, THE TROUBLE LIGHT OUTPUT IS EITHER ON (NORMAL STATE) OR FLASHING (ALARM STATE).
6) DTMF2 OUTPUT CAN BE ASSIGNED TO A RELAY OUTPUT ON AN EXTERNAL I/O MODULE, CONNECTED VIA ECHELON TO THE SEARII.

SII 21 JAN 2015

PROPOSED
DESIGN NO. 15-0066
RED-IN YELLOW-OUT

AS INSTALLED
DATE _____
BY _____
(PRINT NAME)

PROPOSED D	M	Y	REVISIONS	D	C	COMPLETED D	M	Y	C

REGION SOUTHERN
SUB. WAUKESHA 435
SIGNALS AND COMMUNICATIONS HOMEWOOD
21 JANUARY 2015
DES. NAD
CH. MRB
SEARII
PROGRAM DATA
DES PLAINES, IL
PRATT AVE
WAU-020.28-09

DOT# 689 649S

SIEMENS INDUSTRY INC
DES.: NAD | DATE: 21/01/15 | JOB NO.: PWCA10408
CKD.: MRB | ISSUE DATE: N/A | EST. NO.: XP-7628
DRN.: NAD | PLAN NO.: N/A | SHEET 9 OF 16
P TIME: 13:58 | P DATE: $$PLOT_DATE | CAD ID.: WAU-020.28-09

SIEMENS INDUSTRY INC
LOUISVILLE DIVISION, LOUISVILLE, KY

wau-020.28-09.dgn
06-MAY-2015

CONTACT	CLOSED AT	FUNCTION
6	70° -90°	POWER DOWN CONTROL
7	0° -89°	POWER UP CONTROL
8	83° -90°	FLASHING LGT. CONTROL
9	5° -90°	BELL CONTROL
10	0° -5°	GATE DOWN INDICATION
11	N/A	SPARE
12	N/A	SPARE

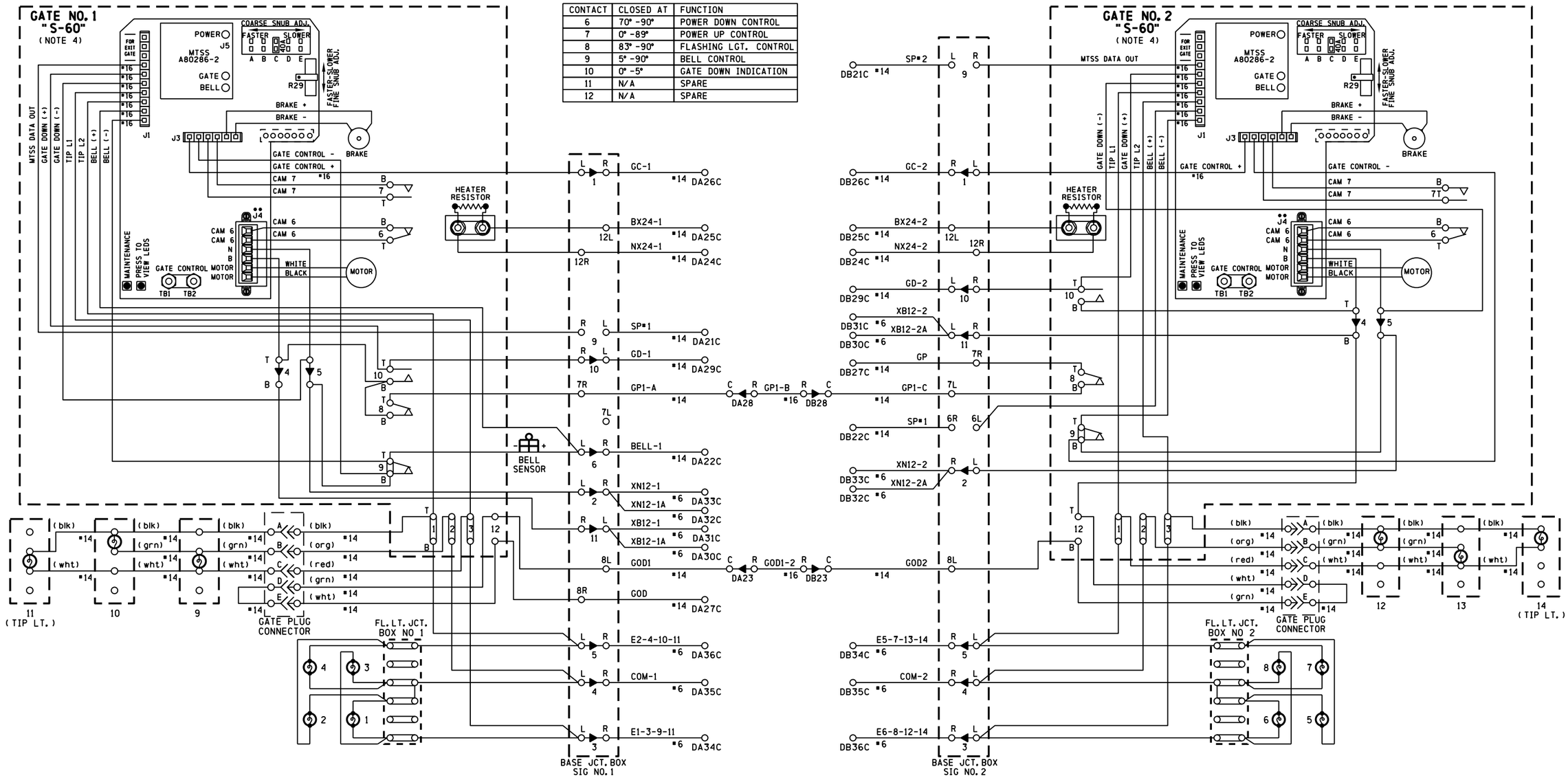

NOTES

1) ON GATE No. 1 ADD JUMPER BETWEEN TERMINALS:
   ADD JUMPER BETWEEN TERMINAL 4T & 10B,
   ADD JUMPER BETWEEN TERMINAL 8B & 10B,
   ADD JUMPER BETWEEN TERMINAL 5B & 9B
2) ON GATE No. 2 ADD JUMPER BETWEEN TERMINALS:
   ADD JUMPER BETWEEN TERMINAL 4T & 10B,
   ADD JUMPER BETWEEN TERMINAL 5B & 9B,
   ADD JUMPER BETWEEN TERMINAL 4B & 12T
3) ALL WIRING #10 AWG UNLESS OTHERWISE NOTED
4) GATE DESCENT TIME (RELEASE FROM VERTICAL TO FULLY HORIZONTAL) TO BE WITHIN 11 SECONDS
5) BELL CUT-OUT (5°-90°) WHEN REQUIRED REMOVE STRAP BETWEEN 9B AND 9T
6) ENSURE ALL TERMINALS HAVE TWO SHOULDER NUTS

SII 21 JAN 2015

PROPOSED
DESIGN NO. 15-0066
RED-IN YELLOW-OUT

AS INSTALLED
DATE _____
BY _____
(PRINT NAME)

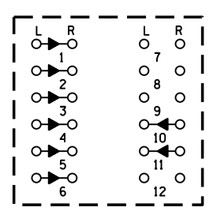
TERMINAL NUMBERING
BASE JCT. BOX 1

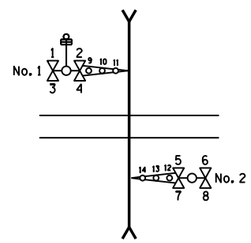

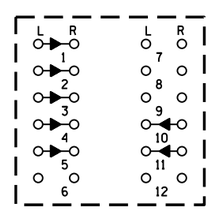
TERMINAL NUMBERING
BASE JCT. BOX 2

PROPOSED D	M	Y	REVISIONS	D	C	COMPLETED D	M	Y	C

REGION SOUTHERN
SUB. WAUKESHA 435

SIGNALS AND COMMUNICATIONS HOMEWOOD
DES. NAD
21 JANUARY 2015
CH. MRB

GATE 1 & 2 MECH. CONTROL CIRCUITS
SAFETRAN S-60
DES PLAINES, IL
PRATT AVE

WAU-020.28-10

DOT# 689 649S

SIEMENS INDUSTRY INC
LOUISVILLE DIVISION, LOUISVILLE, KY

SIEMENS INDUSTRY INC
JOB NO.: PWCA10408
EST. NO.: XP-7628
SHEET 10 OF 16
CAD ID.: WAU-020.28-10
DES.: NAD
CKD.: MRB
DRN.: NAD
P TIME: 13:58
DATE: 21/01/15
ISSUE DATE: N/A
PLAN NO.: N/A
P DATE: $$PLOT_DATE

REVISIONS

NO.	DATE	BY	DESCRIPTION	APP. BY
1				
2				
3				
4				
5				

wau-020.28-10.dgn
06-MAY-2015

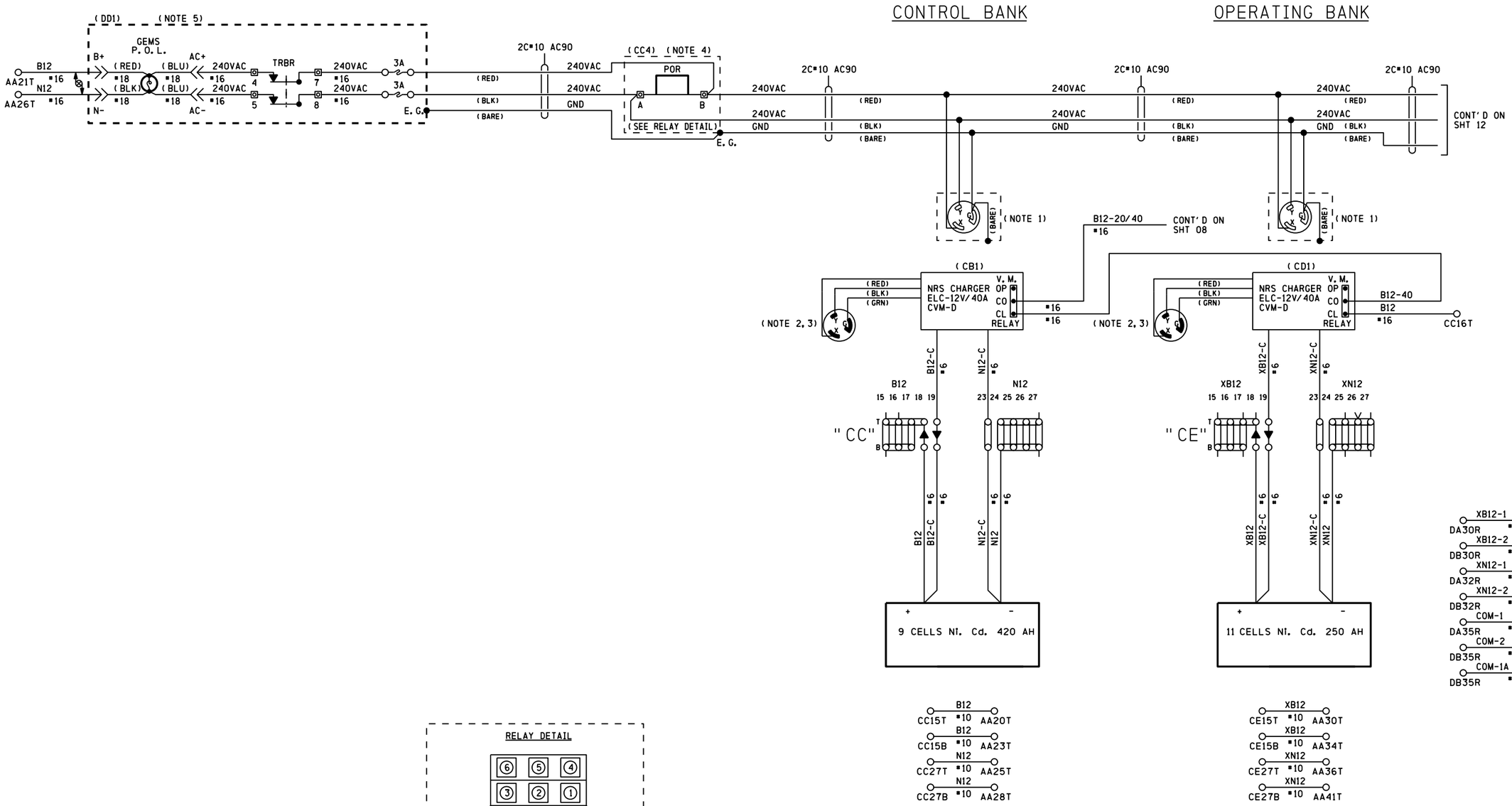

NOTES

1) 30A 250V TWIST LOCK RECEPTACLE HUBBELL HBL 2620
2) PLUG HUBBELL HBL 2621 REFER TO PS-902 PAGE 6
3) GROUND LUG LOCATED ON CHARGER HOUSING
4) PART OF SEARIII POWER CONTROL AND INDICATION RELAY JUNCTION BOX
5) PART OF POWER OFF INDICATOR LIGHT REPEATER RELAY JUNCTION BOX (REFER TO PS-907 SHT 2A)

<< DENOTES WAGO TERMINAL

DENOTES TWISTED PAIR

RELAY DETAIL

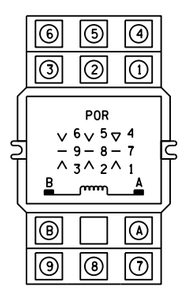

RELAY - POTTER & BRUMFIELD MODEL KUP-14A15-240 SOCKET MOUNTABLE 240 VAC W/ 3 FORM C CONTACTS

SOCKET - SCREW TERMINAL MODEL 27E121

SII 21 JAN 2015

PROPOSED
DESIGN NO. 15-0066
RED-IN YELLOW-OUT

AS INSTALLED
DATE _____
BY _____
(PRINT NAME)

PROPOSED			REVISIONS	D	C	COMPLETED			C
D	M	Y				D	M	Y	

REGION SOUTHERN
SUB. WAUKESHA 435

SIGNALS AND COMMUNICATIONS HOMEWOOD
21 JANUARY 2015
DES. NAD
CH. MRB

DC DISTRIBUTION
DES PLAINES, IL
PRATT AVE

WAU-020.28-11

DOT# 689 649S

REVISIONS				
NO.	DATE	BY	DESCRIPTION	APP. BY
1				
2				
3				
4				
5				

SIEMENS INDUSTRY INC

DES. : NAD	DATE: 21/01/15	JOB NO.: PWCA10408	
CKD. : MRB	ISSUE DATE: N/A	EST. NO.: XP-7628	
DRN. : NAD	PLAN NO.: N/A	SHEET 11 OF 16	
P. TIME: 13:58	P. DATE: $$PLOT_DATE	CAD ID.: WAU-020.28-11	

SIEMENS INDUSTRY INC
LOUISVILLE DIVISION, LOUISVILLE, KY

wau-020.28-11.dgn
06-MAY-2015

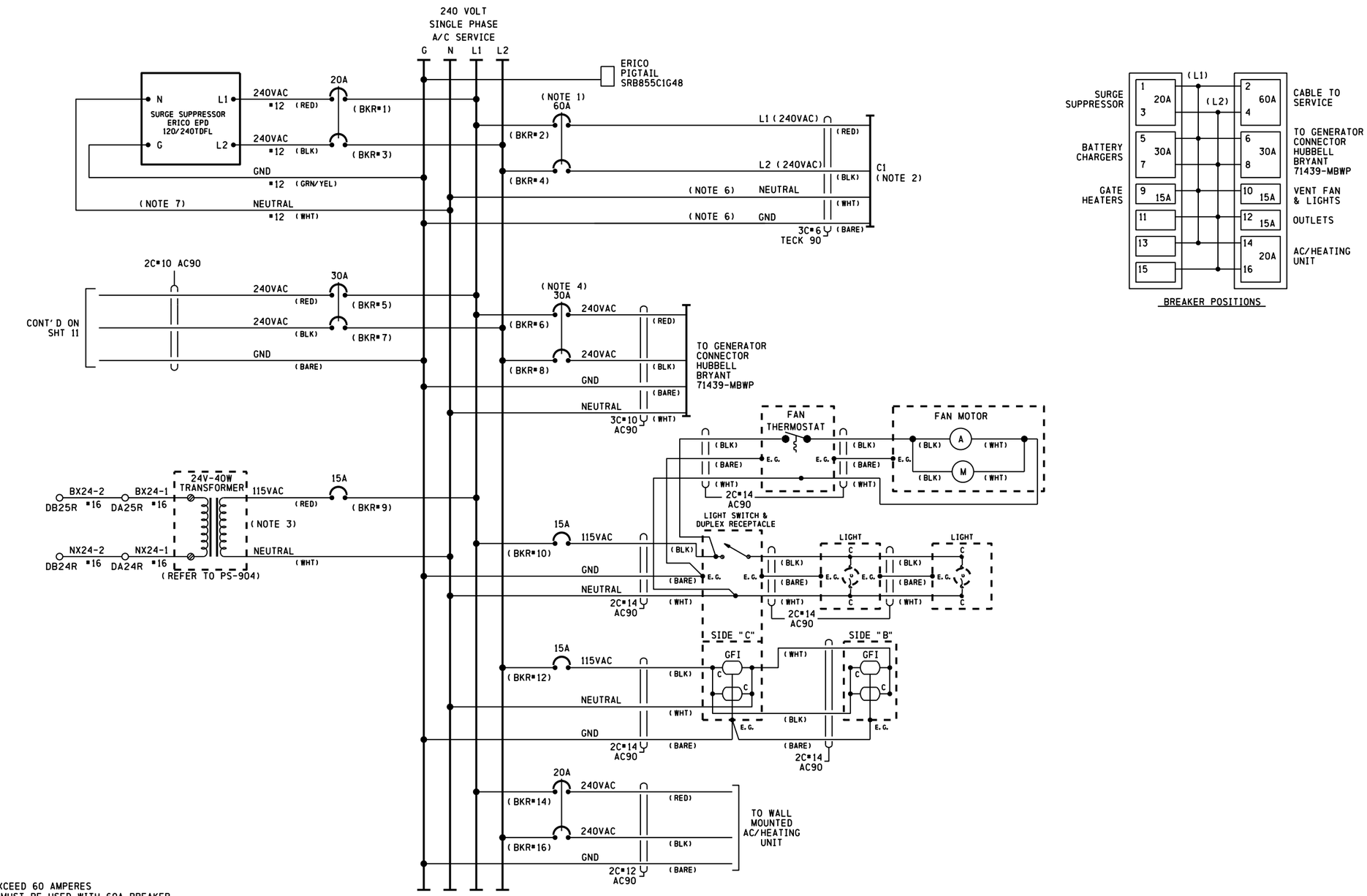

BREAKER POSITIONS

NOTES

1) CIRCUIT BREAKER NOT TO EXCEED 60 AMPERES
   RETAINING KIT PK4DTIM4LA MUST BE USED WITH 60A BREAKER
2) FEEDER CIRCUIT BREAKER, AT STUB POLE SERVICE
   PANEL, NOT TO EXCEED 60 AMPERES
3) 24 VOLT - 40 WATT TRANSFORMER (CN STOCK #02-45-367)
4) A SWITCH TRANSFER KIT MUST BE INSTALLED BETWEEN
   THE SERVICE DISCONNECT BREAKER AND THE GENERATOR HOOK UP
5) WHERE SEPARATE GROUND WIRE EXISTS BETWEEN THE SERVICE AND THE
   LOAD CENTER, REMOVE THE BRASS COLORED BONDING SCREW
   (REFER TO SCHEMATIC ON BOX COVER FOR EXACT LOCATION)
6) S.C.#6 STRANDED, CSA TYPE R90 (X-LINK)
7) KEEP LEADS AS SHORT AS POSSIBLE

SII 21 JAN 2015

PROPOSED
DESIGN NO. 15-0066
RED-IN YELLOW-OUT

AS INSTALLED
DATE _____
BY _____
(PRINT NAME)

PROPOSED D	M	Y	REVISIONS	D	C	COMPLETED D	M	Y	C

REGION SOUTHERN
SUB. WAUKESHA 435

SIGNALS AND COMMUNICATIONS HOMEWOOD
21 JANUARY 2015
DES. NAD
CH. MRB

AC DISTRIBUTION
DES PLAINES, IL
PRATT AVE

WAU-020.28-12

DOT#689 649S

REVISIONS				
NO.	DATE	BY	DESCRIPTION	APP. BY
1				
2				
3				
4				
5				

SIEMENS INDUSTRY INC

DES.: NAD	DATE: 21/01/15	JOB NO.: PWCA10408	
CKD.: MRB	ISSUE DATE: N/A	EST. NO.: XP-7628	
DRN.: NAD	PLAN NO.: N/A	SHEET 12 OF 16	
P TIME: 13:58	P DATE: $$PLOT_DATE	CAD ID.: WAU-020.28-12	

wau-020.28-12.dgn
06-MAY-2015

SIEMENS INDUSTRY INC
LOUISVILLE DIVISION, LOUISVILLE, KY

REVISIONS				
NO.	DATE	BY	DESCRIPTION	APP. BY
1				
2				
3				
4				
5				

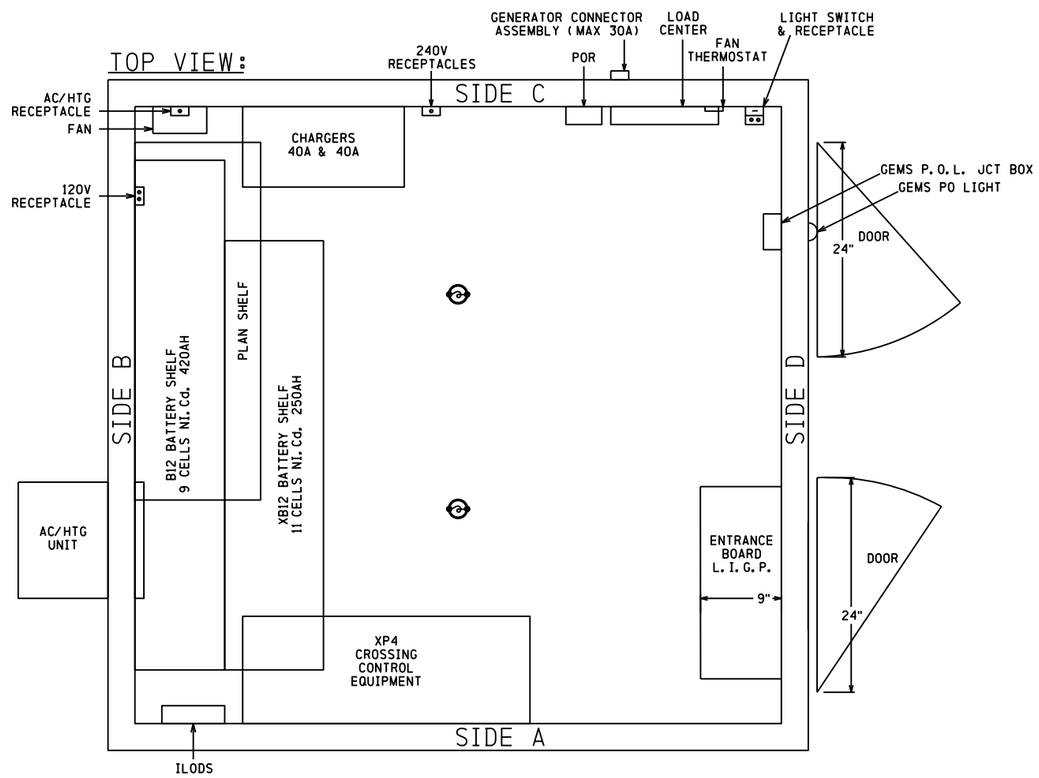

SII 21 JAN 2015

PROPOSED
DESIGN NO. 15-0066
RED-IN YELLOW-OUT

AS INSTALLED
DATE _____
BY _____
(PRINT NAME)

PROPOSED D	M	Y	REVISIONS	D	C	COMPLETED D	M	Y	C

REGION SOUTHERN
SUB. WAUKESHA 435

SIGNALS AND COMMUNICATIONS HOMEWOOD
21 JANUARY 2015
DES. NAD
CH. MRB

BUNGALOW LAYOUT TOP VIEW

DES PLAINES, IL
PRATT AVE

WAU-020.28-13

DOT# 689 649S

SIEMENS INDUSTRY INC

DES.: NAD	DATE: 21/01/15	JOB NO.: PWCA10408	
CKD.: MRB	ISSUE DATE: N/A	EST. NO.: XP-7628	
DRN.: NAD	PLAN NO.: N/A	SHEET 13 OF 16	
P TIME: 13:58	P DATE: $$PLOT_DATE	CAD ID.: WAU-020.28-13	

SIEMENS INDUSTRY INC
LOUISVILLE DIVISION, LOUISVILLE, KY

wau-020.28-13.dgn
06-MAY-2015

ENTRANCE BOARD L. I. G. P.

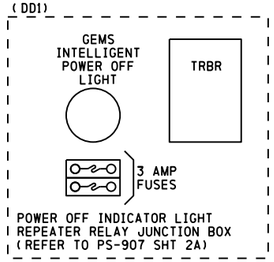

SIDE VIEW: SIDE D

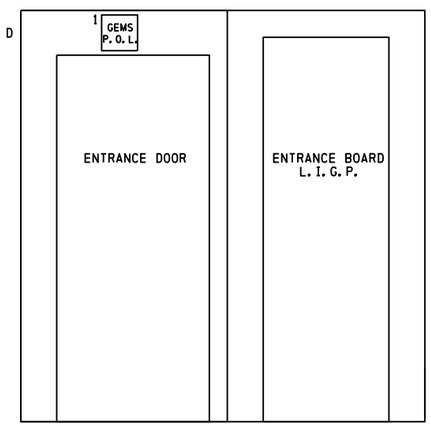

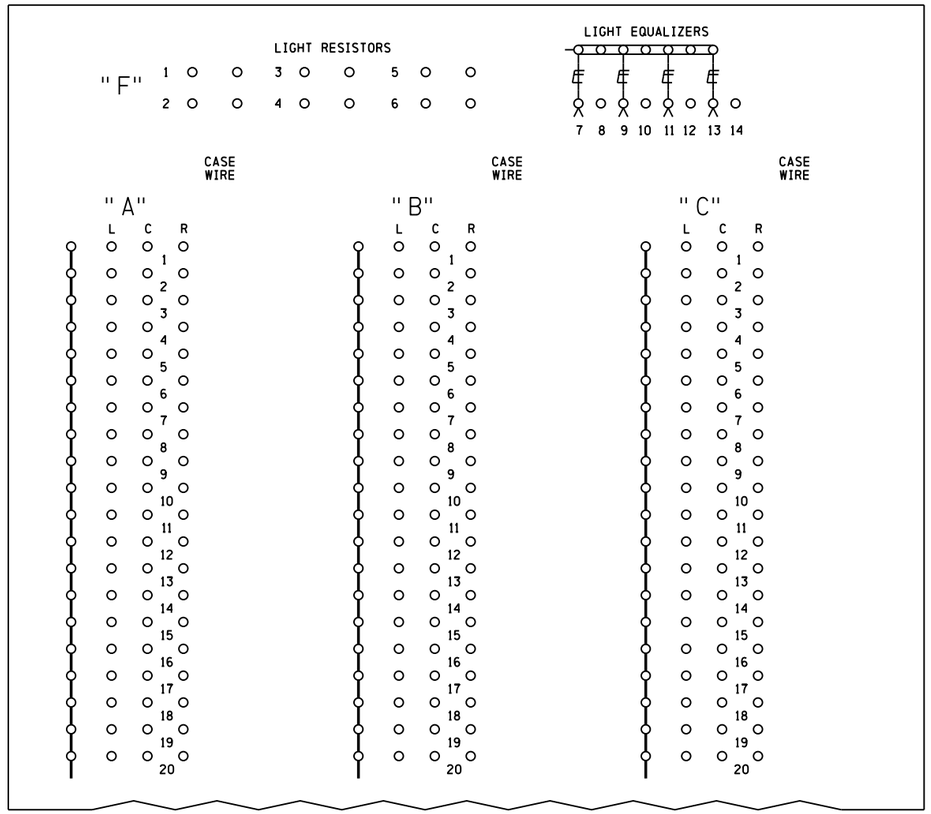

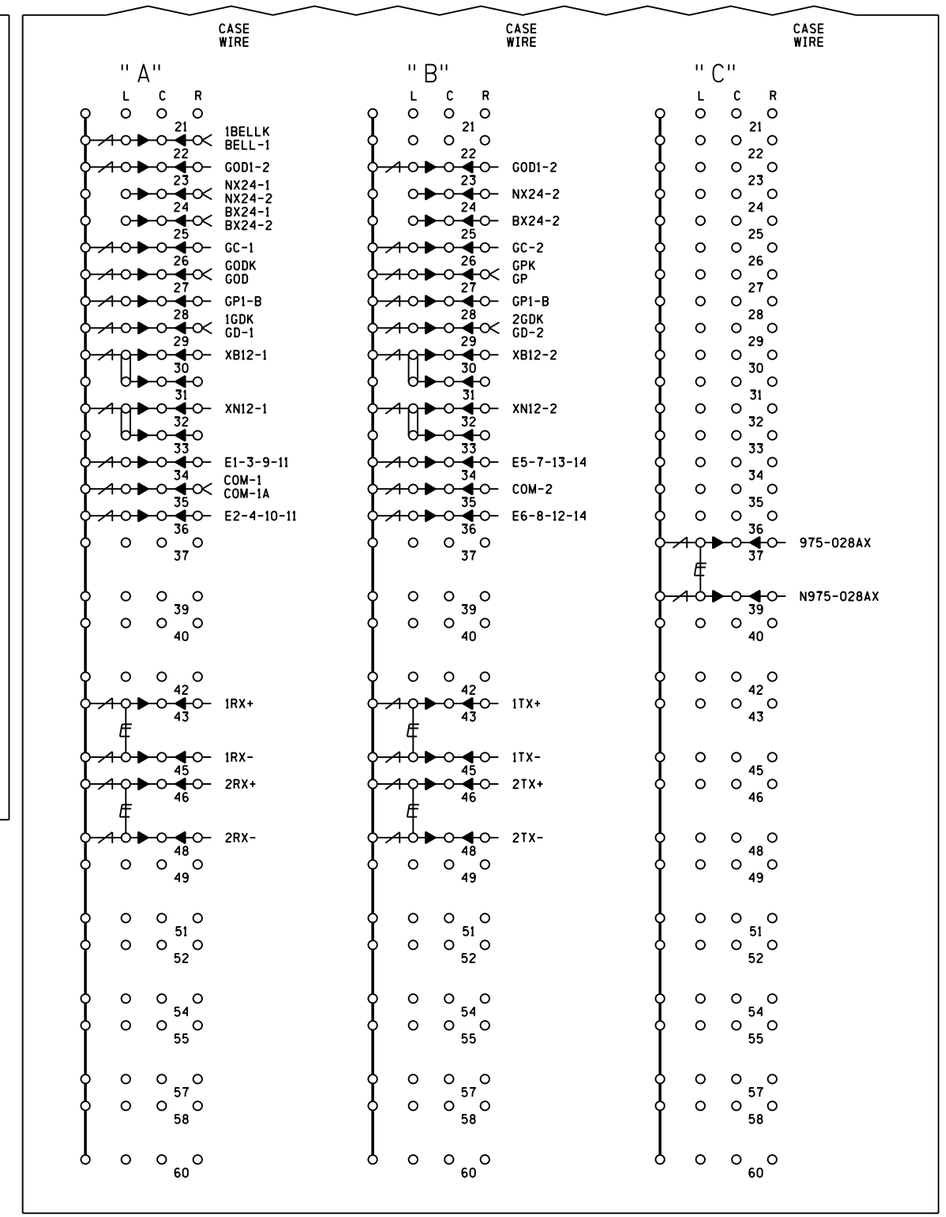

INSIDE

NOTES

- DENOTES HD EQUALIZER CN# 02-32-391 SAFETRAN # 022700-1X
- DENOTES LOW VOLTAGE ARRESTOR CN# ERICO # ETSP23050
- DENOTES GROUND PLANE

SII 21 JAN 2015

PROPOSED
DESIGN NO. 15-0066
RED-IN YELLOW-OUT

AS INSTALLED
DATE _____
BY _____
(PRINT NAME)

PROPOSED D	M	Y	REVISIONS	D	C	COMPLETED D	M	Y	C

REGION SOUTHERN
SUB. WAUKESHA 435

SIGNALS AND COMMUNICATIONS HOMEWOOD
21 JANUARY 2015
DES. NAD
CH. MRB

BUNGALOW LAYOUT SIDE D
& L.I.G.P. INSIDE
DES PLAINES, IL
PRATT AVE

WAU-020.28-14

DOT# 689 649S

REVISIONS				
NO.	DATE	BY	DESCRIPTION	APP. BY
1				
2				
3				
4				
5				

SIEMENS INDUSTRY INC

DES. : NAD	DATE: 21/01/15	JOB NO. : PWCA10408	
CKD. : MRB	ISSUE DATE: N/A	EST. NO. : XP-7628	
DRN. : NAD	PLAN NO. : N/A	SHEET 14 OF 16	
P TIME: 13:58	P DATE: $$PLOT_DATE	CAD ID. : WAU-020.28-14	

SIEMENS INDUSTRY INC
LOUISVILLE DIVISION, LOUISVILLE, KY

wau-020.28-14.dgn
06-MAY-2015

ENTRANCE BOARD L.I.G.P.

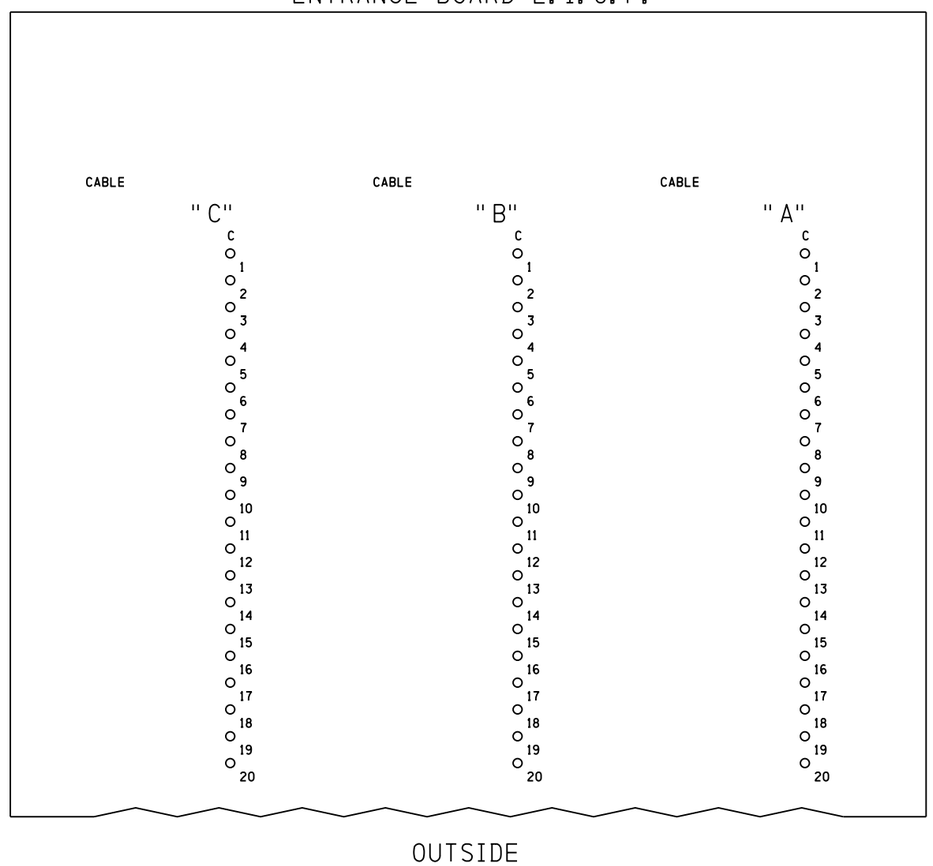

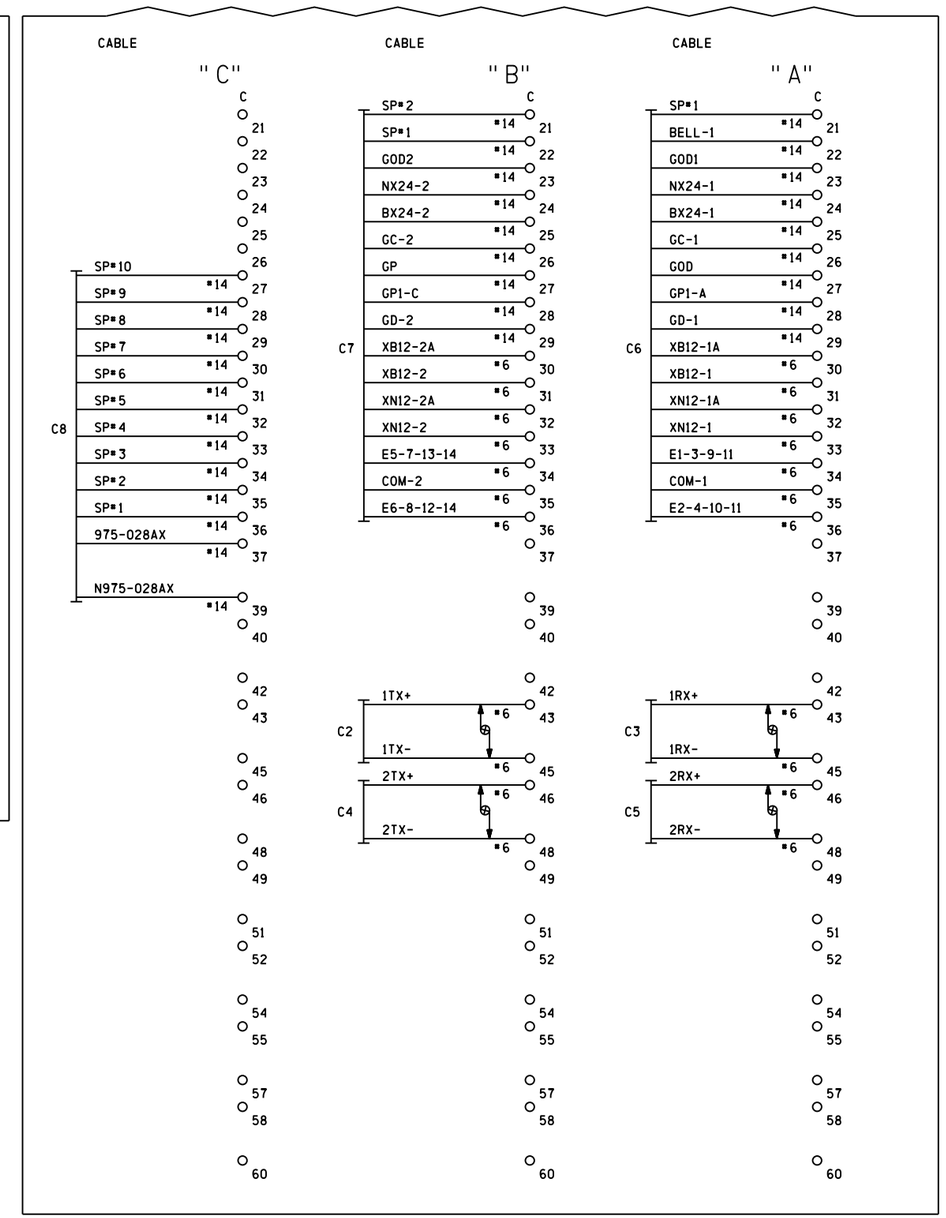

wau-020.28-15.dgn
06-MAY-2015

NOTE

DENOTES TWISTED PAIR

SII 21 JAN 2015

PROPOSED
DESIGN NO. 15-0066
RED-IN YELLOW-OUT

AS INSTALLED
DATE _____
BY _____
(PRINT NAME)

PROPOSED D	M	Y	REVISIONS	D	C	COMPLETED D	M	Y	C

REGION SOUTHERN
SUB. WAUKESHA 435

SIGNALS AND COMMUNICATIONS HOMEWOOD
21 JANUARY 2015
DES. NAD
CH. MRB
ENTRANCE BOARD L.I.G.P. OUTSIDE
DES PLAINES, IL
PRATT AVE
WAU-020.28-15

DOT# 689 649S

REVISIONS

NO.	DATE	BY	DESCRIPTION	APP. BY
1				
2				
3				
4				
5				

SIEMENS INDUSTRY INC

DES.: NAD	DATE: 21/01/15	JOB NO.: PWCA10408	
CKD.: MRB	ISSUE DATE: N/A	EST. NO.: XP-7628	
DRN.: NAD	PLAN NO.: N/A	SHEET 15 OF 16	
P TIME: 13:58	P DATE: $$PLOT_DATE	CAD ID.: WAU-020.28-15	

SIEMENS INDUSTRY INC
LOUISVILLE DIVISION, LOUISVILLE, KY

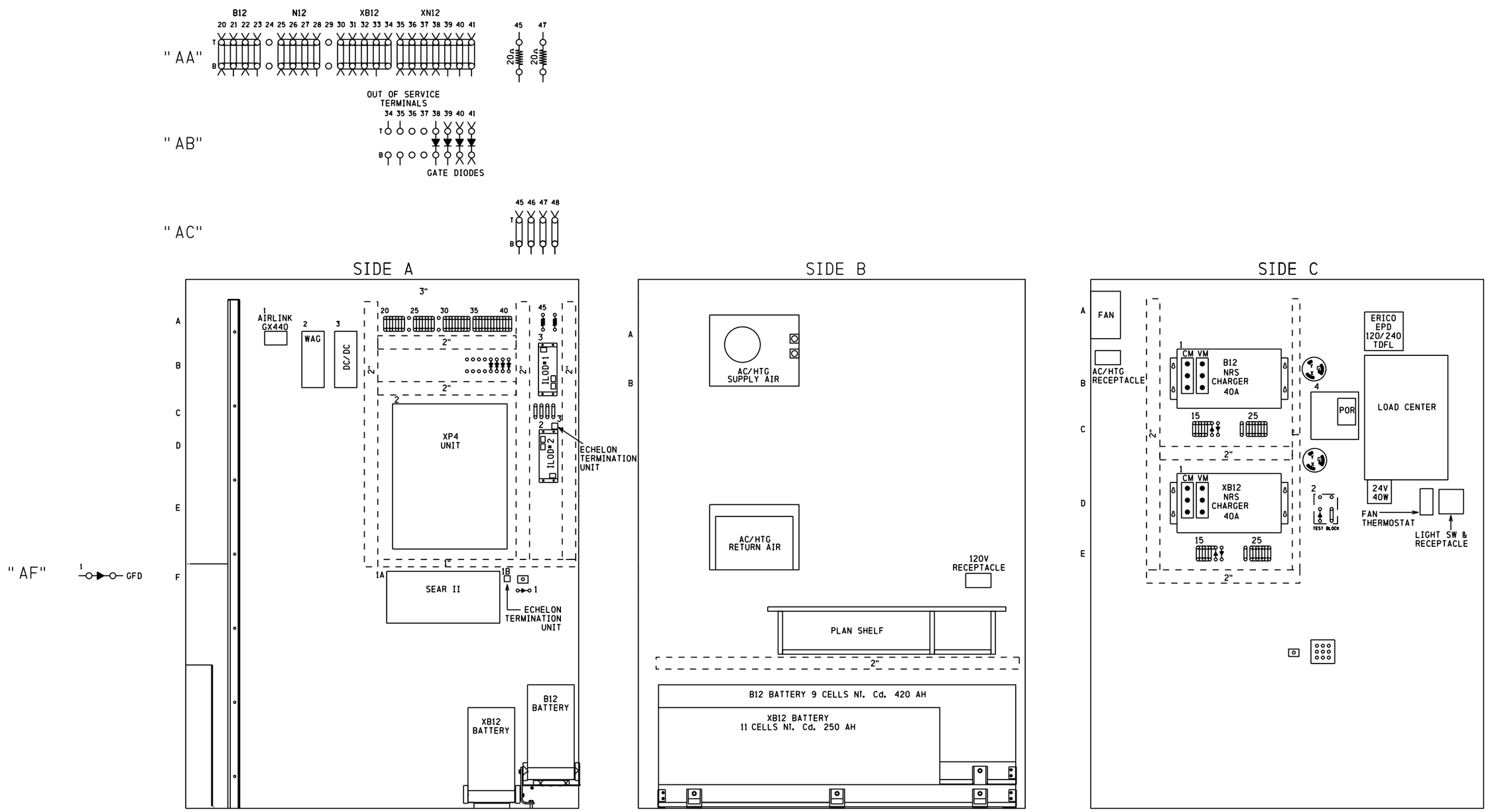

NOTES

1) SURGE PROTECTION SHOULD BE BONDED TO BUNGALOW

REPRESENTS PANDUIT

DENOTES RECTIFIER (SAFETRAN #8008A299006)

SII 21 JAN 2015

PROPOSED
DESIGN NO. 15-0066
RED-IN YELLOW-OUT

AS INSTALLED
DATE
BY
(PRINT NAME)

PROPOSED D	M	Y	REVISIONS	D	C	COMPLETED D	M	Y	C

REGION SOUTHERN
SUB. WAUKESHA 435

SIGNALS AND COMMUNICATIONS HOMEWOOD
DES. NAD
21 JANUARY 2015
CH. MRB
BUNGALOW LAYOUT SIDES A, B & C
DES PLAINES, IL
PRATT AVE

WAU-020.28-16

DOT#689 649S

17

REVISIONS

NO.	DATE	BY	DESCRIPTION	APP. BY
1				
2				
3				
4				
5				

SIEMENS INDUSTRY INC

DES.: NAD	DATE: 21/01/15	JOB NO.: PWCA10408
CKD.: MRB	ISSUE DATE: N/A	EST. NO.: XP-7628
DRN.: NAD	PLAN NO.: N/A	SHEET 16 OF 16
P TIME: 13:58	P DATE: $$PLOT_DATE	CAD ID.: WAU-020.28-16

SIEMENS INDUSTRY INC
LOUISVILLE DIVISION, LOUISVILLE, KY

wau-020.28-16.dgn
06-MAY-2015